FR-5/U FREQUENCY METER

10-100 MEGACYCLES

Basic Freq X Harmonic
Number = Input Frequency

FR-5/U FREQUENCY METER

10-100 MEGACYCLES

Basic Freq X Harmonic Number = Input Frequency

LAVOIE LABORATORIES, INC.

K64100020

FREQUENCY METER FR-5/U
OPERATING INSTRUCTIONS

PRELIMINARY INSTRUCTIONS

Open door at rear of instrument, remove power cord, and insert plug into a suitable 115 volt, 50 to 1000 cps, a-c power source. For 230 volt operation, refer to the technical manual. Turn POWER switch to right, insert headphone plug into PHONE jack and couple RF INPUT coaxial connector to the source of unkown frequency. Allow a minimum of 20 minutes warmup time.

INSTRUCTIONS FOR MEASUREMENT OF UNKNOWN FREQUENCY

STEP 1 Turn RANGE switch to the setting which includes the unknown frequency within its limits. If the approximate frequency is unknown, set RANGE switch to the lowest frequency band.

STEP 2 With the LEVEL control fully clockwise and the FUNCTION SWITCH at COARSE, rotate COARSE tuning knob until an audio tone is heard in the headphones. If the approximate frequency is unknown, it may be necessary to switch bands in order to locate this tone. The approximate frequency in megacycles will be shown in the illuminated MEGACYCLES window of the COARSE tuning dial.

STEP 3 Turn LEVEL control fully counter clockwise; then rotate LEVEL control clockwise until needle on TUNING METER is in the green LEVEL SET area. Carefully maximize meter reading by tuning COARSE knob. Readjust LEVEL control if necessary to keep needle of TUNING METER in green area.

STEP 4 Turn FUNCTION SWITCH to FINE and rotate FINE tuning knob until a loud low frequency audio beat note is heard in the headphones. Tune to approximately zero beat.

STEP 5 Calibrate the instrument as follows:

a. Turn the FUNCTION SWITCH to CHECK.

b. While looking into the FINE tuning window (above the FINE tuning knob) rotate FINE tuning knob until a black diamond shaped mark is lined up with the hairline on the window under CH'K (arrows on the film in the window point in the direction of the diamond).

c. Carefully adjust the CHECK knob until the beat note, which should be heard in the headphones, goes to zero beat and the TUNING METER reading is zero.

STEP 6 Return FUNCTION SWITCH to FINE and again rotate FINE tuning knob until the loud beat note is heard in the headphones. Carefully adjust the FINE tuning knob until a zero beat is heard in the headphones and the TUNING METER needle goes to zero or fluctuates slowly.

NOTE:—IF THE SIGNAL BEING MEASURED IS NOT SUFFICIENTLY STABLE IN FREQUENCY, AN ESTIMATE OF ZERO BEAT MUST BE MADE.

STEP 7 Observe the illuminated HARMONIC window of the COARSE tuning dial to determine that hairline falls **on** numbered black rectangle. If not, a spurious beat note has been used or a mistake has been made. Steps 3, 4, 5, 6, and 7 must be repeated until a beat note is found for which the hairline does fall on a numbered black rectangle.

STEP 8 The instrument is now tuned to the unknown frequency. Proceed to determine this frequency in the CALIBRATION TABLES as follows:

a. Turn to the section of the CALIBRATION TABLES which is the same color as the illuminated portion of the COARSE tuning dial.

b. Turn to the page number indicated under PG in the FINE tuning window.

c. Read the BASIC FREQ. in the FINE tuning window and locate this number in the column of the CALIBRATION TABLES headed BASIC FREQ.

d. Locate the HARMONIC column to be used on the COARSE tuning dial. This is presented as a numbered black rectangle in the illuminated HARMONIC window.

e. At the intersection of the line containing the BASIC FREQ., found in Step 8c, and the HARMONIC column, found in Step 8d, read the frequency in MEGACYCLES PER SECOND. This is the frequency of the signal being measured.

INSTRUCTIONS FOR SETTING TO DESIRED FREQUENCY

STEP 1 Set the RANGE switch to the band which includes the desired frequency.

STEP 2 Turn to the section of the CALIBRATION TABLES which is the same color as the illuminated portion

of the COARSE tuning dial. On page 1 of this section, determine, from the first frequency in each HARMONIC column, the HARMONIC which contains the desired frequency.

STEP 3 Follow this HARMONIC column through the book and locate the desired frequency or the closest listed frequency to the desired.

STEP 4 On the same line as this frequency, note the number in the column headed BASIC FREQ.

STEP 5 Rotate the FINE tuning knob until this BASIC FREQ. appears in the FINE tuning window.

STEP 6 Calibrate the instrument as described in Step 5 of INSTRUCTIONS FOR MEASUREMENT OF UNKNOWN FREQUENCY.

STEP 7 Return the FUNCTION SWITCH to FINE and re-set the film in the FINE tuning window to the BASIC FREQ. found in Step 4.

STEP 8 Rotate the COARSE tuning knob until the HARMONIC number found in Step 2 (number at top of column used) is under the hairline in the illuminated HARMONIC window of the COARSE tuning dial. A signal of the desired frequency is now available at the RF INPUT connector. Amplitude of this signal can be varied by means of the LEVEL control.

H A R M O N I C S

BASIC FREQ.	24	25	26	27	28	29	30	31	32	33	34	35	36
416600	9.9984	10.4150	10.8316	11.2482	11.6648	12.0814	12.4980	12.9146	13.3312	13.7478	14.1644	14.5810	14.9976
603	.9985	.4151	.8317	.2483	.6649	.0815	.4981	.9147	.3313	.7479	.1645	.5811	.9977
606	.9985	.4152	.8318	.2484	.6650	.0816	.4982	.9148	.3314	.7480	.1646	.5812	.9978
609	.9986	.4152	.8318	.2484	.6651	.0817	.4983	.9149	.3315	.7481	.1647	.5813	.9979
612	.9987	.4153	.8319	.2485	.6651	.0817	.4984	.9150	.3316	.7482	.1648	.5814	.9980
416615	9.9988	10.4154	10.8320	11.2486	11.6652	12.0818	12.4985	12.9151	13.3317	13.7483	14.1649	14.5815	14.9981
618	.9988	.4155	.8321	.2487	.6653	.0819	.4985	.9152	.3318	.7484	.1650	.5816	.9982
621	.9989	.4155	.8321	.2488	.6654	.0820	.4986	.9153	.3319	.7485	.1651	.5817	.9984
624	.9990	.4156	.8322	.2488	.6655	.0821	.4987	.9153	.3320	.7486	.1652	.5818	.9985
627	.9990	.4157	.8323	.2489	.6656	.0822	.4988	.9154	.3321	.7487	.1653	.5819	.9986
416630	9.9991	10.4158	10.8324	11.2490	11.6656	12.0823	12.4989	12.9155	13.3322	13.7488	14.1654	14.5821	14.9987
633	.9992	.4158	.8325	.2491	.6657	.0824	.4990	.9156	.3323	.7489	.1655	.5822	.9988
636	.9993	.4159	.8325	.2492	.6658	.0824	.4991	.9157	.3324	.7490	.1656	.5823	.9989
639	.9993	.4160	.8326	.2493	.6659	.0825	.4992	.9158	.3324	.7491	.1657	.5824	.9990
642	.9994	.4161	.8327	.2493	.6660	.0826	.4993	.9159	.3325	.7492	.1658	.5825	.9991
416645	9.9995	10.4161	10.8328	11.2494	11.6661	12.0827	12.4994	12.9160	13.3326	13.7493	14.1659	14.5826	14.9992
648	.9996	.4162	.8328	.2495	.6661	.0828	.4994	.9161	.3327	.7494	.1660	.5827	.9993
651	.9996	.4163	.8329	.2496	.6662	.0829	.4995	.9162	.3328	.7495	.1661	.5828	.9994
654	.9997	.4164	.8330	.2497	.6663	.0830	.4996	.9163	.3329	.7496	.1662	.5829	.9995
657	.9998	.4164	.8331	.2497	.6664	.0831	.4997	.9164	.3330	.7497	.1663	.5830	.4997
416660	9.9998	10.4165	10.8332	11.2498	11.6665	12.0831	12.4998	12.9165	13.3331	13.7498	14.1664	14.5831	14.9998
663	.9999	.4166	.8332	.2499	.6666	.0832	.4999	.9166	.3332	.7490	.1665	.5832	.9999
666	10.0000	.4167	.8333	.2500	.6666	.0833	.5000	.9166	.3333	.7500	.1666	.5833	15.0000
669	.0001	.4167	.8334	.2501	.6667	.0834	.5001	.9167	.3334	.7501	.1667	.5834	.0001
672	.0001	.4168	.8335	.2501	.6668	.0835	.5002	.9168	.3335	.7502	.1668	.5835	.0002
416675	10.0002	10.4169	10.8336	11.2502	11.6669	12.0836	12.5003	12.9169	13.3336	13.7503	14.1670	14.5836	15.0003
678	.0003	.4170	.8336	.2503	.6670	.0837	.5003	.9170	.3337	.7504	.1671	.5837	.0004
681	.0003	.4170	.8337	.2504	.6671	.0837	.5004	.9171	.3338	.7505	.1672	.5838	.0005
684	.0004	.4171	.8338	.2505	.6672	.0838	.5005	.9172	.3339	.7506	.1673	.5839	.0006
687	.0005	.4172	.8339	.2505	.6672	.0839	.5006	.9173	.3340	.7507	.1674	.5840	.0007
416690	10.0006	10.4173	10.8339	11.2506	11.6673	12.0840	12.5007	12.9174	13.3341	13.7508	14.1675	14.5842	15.0008
693	.0006	.4173	.8340	.2507	.6674	.0841	.5008	.9175	.3342	.7509	.1676	.5843	.0009
696	.0007	.4174	.8341	.2508	.6675	.0842	.5009	.9176	.3343	.7510	.1677	.5844	.0011
699	.0008	.4175	.8342	.2509	.6676	.0843	.5010	.9177	.3344	.7511	.1678	.5845	.0012
702	.0008	.4176	.8343	.2510	.6677	.0844	.5011	.9178	.3345	.7512	.1679	.5846	.0013
416705	10.0009	10.4176	10.8343	11.2510	11.6677	12.0844	12.5012	12.9179	13.3346	13.7513	14.1680	14.5847	15.0014
708	.0010	.4177	.8344	.2511	.6678	.0845	.5012	.9179	.3347	.7514	.1681	.5848	.0015
711	.0011	.4178	.8345	.2512	.6679	.0846	.5013	.9180	.3348	.7515	.1682	.5849	.0016
714	.0011	.4179	.8346	.2513	.6680	.0847	.5014	.9181	.3348	.7516	.1683	.5850	.0017
717	.0012	.4179	.8346	.2514	.6681	.0848	.5015	.9182	.3349	.7517	.1684	.5851	.0018
416720	10.0013	10.4180	10.8347	11.2514	11.6682	12.0849	12.5016	12.9183	13.3350	13.7518	14.1685	14.5852	15.0019
723	.0014	.4181	.8348	.2515	.6682	.0850	.5017	.9184	.3351	.7519	.1686	.5853	.0020
726	.0014	.4182	.8349	.2516	.6683	.0851	.5018	.9185	.3352	.7520	.1687	.5854	.0021
729	.0015	.4182	.8350	.2517	.6684	.0851	.5019	.9186	.3353	.7521	.1688	.5855	.0022
732	.0016	.4183	.8350	.2518	.6685	.0852	.5020	.9187	.3354	.7522	.1689	.5856	.0024
416735	10.0016	10.4184	10.8351	11.2518	11.6686	12.0853	12.5021	12.9188	13.3355	13.7523	14.1690	14.5857	1.50025
738	.0017	.4185	.8352	.2519	.6687	.0854	.5021	.9189	.3356	.7524	.1691	.5858	.0026
741	.0018	.4185	.8353	.2520	.6687	.0855	.5022	.9190	.3357	.7525	.1692	.5859	.0027
744	.0019	.4186	.8353	.2521	.6688	.0856	.5023	.9191	.3358	.7526	.1693	.5860	.0028
747	.0019	.4187	.8354	.2522	.6689	.0857	.5024	.9192	.3359	.7527	.1694	.5861	.0029
416750	10.0020	10.4188	10.8355	11.2523	11.6690	12.0858	12.5025	12.9193	13.3360	13.7528	14.1695	14.5863	15.0030
753	.0021	.4188	.8356	.2523	.6691	.0858	.5026	.9193	.3361	.7528	.1696	.5864	.0031
756	.0021	.4189	.8357	.2524	.6692	.0859	.5027	.9194	.3362	.7529	.1697	.5865	.0032
759	.0022	.4190	.8357	.2525	.6693	.0860	.5028	.9195	.3363	.7530	.1698	.5866	.0033
762	.0023	.4191	.8358	.2526	.6693	.0861	.5029	.9196	.3364	.7531	.1699	.5867	.0034
416765	10.0024	10.4191	10.8359	11.2527	11.6694	12.0862	12.5030	12.9197	13.3365	13.7532	14.1700	14.5868	15.0035
768	.0024	.4192	.8360	.2527	.6695	.0863	.5030	.9198	.3366	.7533	.1701	.5869	.0036
771	.0025	.4193	.8360	.2528	.6696	.0864	.5031	.9199	.3367	.7534	.1702	.5870	.0038
774	.0026	.4194	.8361	.2529	.6697	.0864	.5032	.9200	.3368	.7535	.1703	.5871	.0039
777	.0026	.4194	.8362	.2530	.6698	.0865	.5033	.9201	.3369	.7536	.1704	.5872	.0040
416780	10.0027	10.4195	10.8363	11.2531	11.6698	12.0866	12.5034	12.9202	13.3370	13.7537	14.1705	14.5873	15.0041
783	.0028	.4196	.8364	.2531	.6699	.0867	.5035	.9203	.3371	.7538	.1706	.5874	.0042
786	.0029	.4197	.8364	.2532	.6700	.0868	.5036	.9204	.3372	.7539	.1707	.5875	.0043
789	.0029	.4197	.8365	.2533	.6701	.0869	.5037	.9205	.3372	.7540	.1708	.5876	.0044
792	.0030	.4198	.8366	.2534	.6702	.0870	.5038	.9206	.3373	.7541	.1709	.5877	.0045
416795	10.0031	10.4199	10.8367	11.2535	11.6703	12.0871	12.5039	12.9206	13.3374	13.7542	14.1710	14.5878	15.0046
798	.0032	.4200	.8367	.2535	.6703	.0871	.5039	.9207	.3375	.7543	.1711	.5879	.0047
801	.0032	.4200	.8368	.2536	.6704	.0872	.5040	.9208	.3376	.7544	.1712	.5880	.0048
804	.0033	.4201	.8369	.2537	.6705	.0873	.5041	.9209	.3377	.7545	.1713	.5881	.0049
807	.0034	.4202	.8370	.2538	.6706	.0874	.5042	.9210	.3378	.7546	.1714	.5882	.0051
416810	10.0034	10.4203	10.8371	11.2539	11.6707	12.0875	12.5043	12.9211	13.3379	13.7547	14.1715	14.5884	15.0052
813	.0035	.4203	.8371	.2540	.6708	.0876	.5044	.9212	.3380	.7548	.1716	.5885	.0053
816	.0036	.4204	.8372	.2540	.6708	.0877	.5045	.9213	.3381	.7549	.1717	.5886	.0054
819	.0037	.4205	.8373	.2541	.6709	.0878	.5046	.9214	.3382	.7550	.1718	.5887	.0055
822	.0037	.4206	.8374	.2542	.6710	.0878	.5047	.9215	.3383	.7551	.1719	.5888	.0056
416825	10.0038	10.4206	10.8375	11.2543	11.6711	12.0879	12.5048	12.9216	13.3384	13.7552	14.1721	14.5889	15.0057
828	.0039	.4207	.8375	.2544	.6712	.0880	.5048	.9217	.3385	.7553	.1722	.5890	.0058
831	.0039	.4208	.8376	.2544	.6713	.0881	.5049	.9218	.3386	.7554	.1723	.5891	.0059
834	.0040	.4209	.8377	.2545	.6714	.0882	.5050	.9219	.3387	.7555	.1724	.5892	.0060
837	.0041	.4209	.8378	.2546	.6714	.0883	.5051	.9219	.3388	.7556	.1725	.5893	.0061
416840	10.0042	10.4210	10.8378	11.2547	11.6715	12.0884	12.5052	12.9220	13.3389	13.7557	14.1726	14.5894	15.0062
843	.0042	.4211	.8379	.2548	.6716	.0084	.5053	.9221	.3390	.7558	.1727	.5895	.0063
846	.0043	.4212	.8380	.2548	.6717	.0085	.5054	.9222	.3391	.7559	.1728	.5896	.0065
849	.0044	.4212	.8381	.2549	.6718	.0886	.5055	.9223	.3392	.7560	.1729	.5897	.0066
852	.0044	.4213	.8382	.2550	.6719	.0887	.5056	.9224	.3393	.7561	.1730	.5898	.0067
416855	10.0045	10.4214	10.8382	11.2551	11.6719	12.0888	12.5057	12.9225	13.3394	13.7562	14.1731	14.5899	15.0068
858	.0046	.4215	.8383	.2552	.6720	.0889	.5057	.8226	.3395	.7563	.1732	.5900	.0069
861	.0047	.4215	.8384	.2552	.6721	.0890	.5058	.9227	.3396	.7564	.1733	.5901	.0070
864	.0047	.4216	.8385	.2553	.6722	.0891	.5059	.9228	.3396	.7565	.1734	.5902	.0071
867	.0048	.4217	.8385	.2554	.6723	.0891	.5060	.9229	.3397	.7566	.1735	.5903	.0072
416870	10.0049	10.4218	10.8386	11.2555	11.6724	12.0892	12.5061	12.9230	13.3398	13.7567	14.1736	14.5905	15.0073
873	.0050	.4218	.8387	.2556	.6724	.0893	.5062	.9231	.3399	.7568	.1737	.5906	.0074
876	.0050	.4219	.8388	.2557	.6725	.0894	.5063	.9232	.3400	.7569	.1738	.5907	.0075
879	.0051	.4220	.8389	.2557	.6726	.0895	.5064	.9232	.3401	.7570	.1739	.5908	.0076
882	.0052	.4221	.8389	.2558	.6727	.0896	.5065	.9233	.3402	.7571	.1740	.5909	.0078
416885	10.0052	10.4221	10.8390	11.2559	11.6728	12.0897	12.5066	12.9234	13.3403	13.7572	14.1741	14.5910	15.0079
888	.0053	.4222	.8391	.2560	.6729	.0898	.5066	.9235	.3404	.7573	.1742	.5911	.0080
891	.0054	.4223	.8392	.2561	.6729	.0898	.5067	.9236	.3405	.7574	.1743	.5912	.0081
894	.0055	.4224	.8392	.2561	.6730	.0899	.5068	.9237	.3406	.7575	.1744	.5913	.0082
897	.0055	.4224	.8393	.2562	.6731	.0900	.5069	.9238	.3407	.7576	.1745	.5914	.0083
416900	10.0056	10.4225	10.8394	11.2563	11.6732	12.0901	12.5070	12.9239	13.3408	13.7577	14.1746	14.5915	15.0084

MEGACYCLES PER SECOND

HARMONICS

BASIC FREQ.	37	38	39	40	41	42	43	44	45	46	47	48	50
416600	15.4142	15.8308	16.2474	16.6640	17.0806	17.4972	17.9138	18.3304	18.7470	19.1636	19.5802	19.9968	20.8300
603	.4143	.8309	.2475	.6641	.0807	.4973	.9139	.3305	.7471	.1637	.5803	.9969	.8302
606	.4144	.8310	.2476	.6642	.0808	.4975	.9141	.3307	.7473	.1639	.5805	.9971	.8303
609	.4145	.8311	.2478	.6644	.0810	.4976	.9142	.3308	.7474	.1640	.5806	.9972	.8305
612	.4146	.8313	.2479	.6645	.0811	.4977	.9143	.3309	.7475	.1642	.5808	.9974	.8306
416615	15.4148	15.8314	16.2480	16.6646	17.0812	17.4978	17.9144	18.3311	18.7477	19.1643	19.5809	19.9975	20.8308
618	.4149	.8315	.2481	.6647	.0813	.4980	.9146	.3312	.7478	.1644	.5810	.9977	.8309
621	.4150	.8316	.2482	.6648	.0815	.4981	.9147	.3313	.7479	.1646	.5812	.9978	.8311
624	.4151	.8317	.2483	.6650	.0816	.4982	.9148	.3315	.7481	.1647	.5813	.9980	.8312
627	.4152	.8318	.2485	.6651	.0817	.4983	.9150	.3316	.7482	.1648	.5815	.9981	.8314
416630	15.4153	15.8319	16.2486	16.6652	17.0818	17.4985	17.9151	18.3317	18.7484	19.1650	19.5816	19.9982	20.8315
633	.4154	.8321	.2487	.6653	.0820	.4986	.9152	.3319	.7485	.1651	.5818	.9984	.8317
636	.4155	.8322	.2488	.6654	.0821	.4987	.9153	.3320	.7486	.1653	.5819	.9985	.8318
639	.4156	.8323	.2489	.6656	.0822	.4988	.9155	.3321	.7488	.1654	.5820	.9987	.8320
642	.4158	.8324	.2490	.6657	.0823	.4990	.9156	.3322	.7489	.1655	.5822	.9988	.8321
416645	15.4159	15.8325	16.2492	16.6658	17.0824	17.4991	17.9157	18.3324	18.7490	19.1657	19.5823	19.9990	20.8323
648	.4160	.8326	.2493	.6659	.0826	.4992	.9159	.3325	.7492	.1658	.5825	.9991	.8324
651	.4161	.8327	.2494	.6660	.0827	.4993	.9160	.3326	.7493	.1659	.5826	.9992	.8326
654	.4162	.8329	.2495	.6662	.0828	.4995	.9161	.3328	.7494	.1661	.5827	.9994	.8327
657	.4163	.8330	.2496	.6663	.0829	.4996	.9163	.3329	.7496	.1662	.5829	.9995	.8329
416660	15.4164	15.8331	16.2497	16.6664	17.0831	17.4997	17.9164	18.3330	18.7497	19.1664	19.5830	19.9997	20.8330
663	.4165	.8332	.2499	.6665	.0832	.4998	.9165	.3332	.7498	.1665	.5832	.9998	.8332
666	.4166	.8333	.2500	.6666	.0833	.5000	.9166	.3333	.7500	.1666	.5833	20.0000	.8333
669	.4168	.8334	.2501	.6668	.0834	.5001	.9168	.3334	.7501	.1668	.5834	.0001	.8335
672	.4169	.8335	.2502	.6669	.0836	.5002	.9169	.3336	.7502	.1669	.5836	.0003	.8336
416675	15.4170	15.8337	16.2503	16.6670	17.0837	17.5004	17.9170	18.3337	18.7504	19.1671	19.5837	20.0004	20.8338
678	.4171	.8338	.2504	.6671	.0838	.5005	.9172	.3338	.7505	.1672	.5839	.0005	.8339
681	.4172	.8339	.2506	.6672	.0839	.5006	.9173	.3340	.7506	.1673	.5840	.0007	.8341
684	.4173	.8340	.2507	.6674	.0840	.5007	.9174	.3341	.7508	.1675	.5841	.0008	.8342
687	.4174	.8341	.2508	.6675	.0842	.5009	.9175	.3342	.7509	.1676	.5843	.0010	.8344
416690	15.4175	15.8342	16.2509	16.6676	17.0843	17.5010	17.9177	18.3344	18.7511	19.1677	19.5844	20.0011	20.8345
693	.4176	.8343	.2510	.6677	.0844	.5011	.9178	.3345	.7512	.1679	.5846	.0013	.8347
696	.4178	.8344	.2511	.6678	.0845	.5012	.9179	.3346	.7513	.1680	.5847	.0014	.8348
699	.4179	.8346	.2513	.6680	.0847	.5014	.9181	.3348	.7515	.1682	.5849	.0016	.8350
702	.4180	.8347	.2514	.6681	.0848	.5015	.9182	.3349	.7516	.1683	.5850	.0017	.8351
416705	15.4181	15.8348	16.2515	16.6682	17.0849	17.5016	17.9183	18.3350	18.7517	19.1684	19.5851	20.0018	20.8353
708	.4182	.8349	.2516	.6683	.0850	.5017	.9184	.3352	.7519	.1686	.5853	.0020	.8354
711	.4183	.8350	.2517	.6684	.0852	.5019	.9186	.3353	.7520	.1687	.5854	.0021	.8356
714	.4184	.8351	.2518	.6686	.0853	.5020	.9187	.3354	.7521	.1688	.5856	.0023	.8357
717	.4185	.8352	.2520	.6687	.0854	.5021	.9188	.3355	.7523	.1690	.5857	.0024	.8359
416720	15.4186	15.8354	16.2521	16.6688	17.0855	17.5022	17.9190	18.3357	18.7524	19.1691	19.5858	20.0026	20.8360
723	.4188	.8355	.2522	.6689	.0856	.5024	.9191	.3358	.7525	.1693	.5860	.0027	.8362
726	.4189	.8356	.2523	.6690	.0858	.5025	.9192	.3359	.7527	.1694	.5861	.0028	.8363
729	.4190	.8357	.2524	.6692	.0859	.5026	.9193	.3361	.7528	.1695	.5863	.0030	.8365
732	.4191	.8358	.2525	.6693	.0860	.5027	.9195	.3362	.7529	.1697	.5864	.0031	.8366
416735	15.4192	15.8359	16.2527	16.6694	17.0861	17.5029	17.9196	18.3363	18.7531	19.1698	19.5865	20.0033	20.8368
738	.4193	.8360	.2528	.6695	.0863	.5030	.9197	.3365	.7532	.1699	.5867	.0034	.8369
741	.4194	.8362	.2529	.6696	.0864	.5031	.9199	.3366	.7533	.1701	.5868	.0036	.8371
744	.4195	.8363	.2530	.6698	.0865	.5032	.9200	.3367	.7535	.1702	.5870	.0037	.8372
747	.4196	.8364	.2531	.6699	.0866	.5034	.9201	.3369	.7536	.1704	.5871	.0039	.8374
416750	15.4198	15.8365	16.2533	16.6700	17.0868	17.5035	17.9203	18.3370	18.7538	19.1705	19.5873	20.0040	20.8375
753	.4199	.8366	.2534	.6701	.0869	.5036	.9204	.3371	.7539	.1706	.5874	.0041	.8377
756	.4200	.8367	.2535	.6702	.0870	.5038	.9205	.3373	.7540	.1708	.5875	.0043	.8378
759	.4201	.8368	.2536	.6704	.0871	.5039	.9206	.3374	.7542	.1709	.5877	.0044	.8380
762	.4202	.8370	.2537	.6705	.0872	.5040	.9208	.3375	.7543	.1711	.5878	.0046	.8381
416765	15.4203	15.8371	16.2538	16.6706	17.0874	17.5041	17.9209	18.3377	18.7544	19.1712	19.5880	20.0047	20.8383
768	.4204	.8372	.2540	.6707	.0875	.5043	.9210	.3378	.7546	.1713	.5881	.0049	.8384
771	.4205	.8373	.2541	.6708	.0876	.5044	.9212	.3379	.7547	.1715	.5882	.0050	.8386
774	.4206	.8374	.2542	.6710	.0877	.5045	.9213	.3381	.7548	.1716	.5884	.0052	.8387
777	.4207	.8375	.2543	.6711	.0879	.5046	.9214	.3382	.7550	.1717	.5885	.0053	.8389
416780	15.4209	15.8376	16.2544	16.6712	17.0880	17.5048	17.9215	18.3383	18.7551	19.1719	19.5887	20.0054	20.8390
783	.4210	.8378	.2545	.6713	.0881	.5049	.9217	.3385	.7552	.1720	.5888	.0056	.8392
786	.4211	.8379	.2547	.6714	.0882	.5050	.9218	.3386	.7554	.1722	.5889	.0057	.8393
789	.4212	.8380	.2548	.6716	.0883	.5051	.9219	.3387	.7555	.1723	.5891	.0059	.8395
792	.4213	.8381	.2549	.6717	.0885	.5053	.9221	.3388	.7556	.1724	.5892	.0060	.8396
416795	15.4214	15.8382	16.2550	16.6718	17.0886	17.5054	17.9222	18.3390	18.7558	19.1726	19.5894	20.0062	20.8398
798	.4215	.8383	.2551	.6719	.0887	.5055	.9223	.3391	.7559	.1727	.5895	.0063	.8399
801	.4216	.8384	.2552	.6720	.0888	.5056	.9224	.3392	.7560	.1728	.5896	.0064	.8401
804	.4217	.8386	.2554	.6722	.0890	.5058	.9226	.3394	.7562	.1730	.5898	.0066	.8402
807	.4219	.8387	.2555	.6723	.0891	.5059	.9227	.3395	.7563	.1731	.5899	.0067	.8404
416810	15.4220	15.8388	16.2556	16.6724	17.0892	17.5060	17.9228	18.3396	18.7565	19.1733	19.5901	20.0069	20.8405
813	.4221	.8389	.2557	.6725	.0893	.5061	.9230	.3398	.7566	.1734	.5902	.0070	.8407
816	.4222	.8390	.2558	.6726	.0895	.5063	.9231	.3399	.7567	.1735	.5904	.0072	.8408
819	.4223	.8391	.2559	.6728	.0896	.5064	.9232	.3400	.7569	.1737	.5905	.0073	.8410
822	.4224	.8392	.2561	.6729	.0897	.5065	.9233	.3402	.7570	.1738	.5906	.0075	.8411
416825	15.4225	15.8394	16.2562	16.6730	17.0898	17.5067	17.9235	18.3403	18.7571	19.1740	19.5908	20.0076	20.8413
828	.4226	.8395	.2563	.6731	.0899	.5068	.9236	.3404	.7573	.1741	.5909	.0077	.8414
831	.4227	.8396	.2564	.6732	.0901	.5069	.9237	.3406	.7574	.1742	.5911	.0079	.8416
834	.4229	.8397	.2565	.6734	.0902	.5070	.9239	.3407	.7575	.1744	.5912	.0080	.8417
837	.4230	.8398	.2566	.6735	.0903	.5072	.9240	.3408	.7577	.1745	.5913	.0082	.8419
416840	15.4231	15.8399	16.2568	16.6736	17.0904	17.5073	17.9241	18.3410	18.7578	19.1746	19.5915	20.0083	20.8420
843	.4232	.8400	.2569	.6737	.0906	.5074	.9242	.3411	.7579	.1748	.5916	.0085	.8422
846	.4233	.8401	.2570	.6738	.0907	.5075	.9244	.3412	.7581	.1749	.5918	.0086	.8423
849	.4234	.8403	.2571	.6740	.0908	.5077	.9245	.3414	.7582	.1751	.5919	.0088	.8425
852	.4235	.8404	.2572	.6741	.0909	.5078	.9246	.3415	.7583	.1752	.5920	.0089	.8426
416855	15.4236	15.8405	16.2573	16.6742	17.0911	17.5079	17.9248	18.3416	18.7585	19.1753	19.5922	20.0090	20.8428
858	.4237	.8406	.2575	.6743	.0912	.5080	.9249	.3418	.7586	.1755	.5923	.0092	.8429
861	.4239	.8407	.2576	.6744	.0913	.5082	.9250	.3419	.7587	.1756	.5925	.0093	.8431
864	.4240	.8408	.2577	.6746	.0914	.5083	.9252	.3420	.7589	.1757	.5926	.0095	.8432
867	.4241	.8409	.2578	.6747	.0915	.5084	.9253	.3421	.7590	.1759	.5927	.0096	.8434
416870	15.4242	15.8411	16.2579	16.6748	17.0917	17.5085	17.9254	18.3423	18.7592	19.1760	19.5929	20.0098	20.8435
873	.4243	.8412	.2580	.6749	.0918	.5087	.9255	.3424	.7593	.1762	.5930	.0099	.8437
876	.4244	.8413	.2582	.6750	.0919	.5088	.9257	.3425	.7594	.1763	.5932	.0100	.8438
879	.4245	.8414	.2583	.6752	.0920	.5089	.9258	.3427	.7596	.1764	.5933	.0102	.8440
882	.4246	.8415	.2584	.6753	.0922	.5090	.9259	.3428	.7597	.1766	.5935	.0103	.8441
416885	15.4247	15.8416	16.2585	16.6754	17.0923	17.5092	17.9261	18.3429	18.7598	19.1767	19.5936	20.0105	20.8443
888	.4249	.8417	.2586	.6755	.0924	.5093	.9262	.3431	.7600	.1768	.5937	.0106	.8444
891	.4250	.8419	.2587	.6756	.0925	.5094	.9263	.3432	.7601	.1770	.5939	.0108	.8446
894	.4251	.8420	.2589	.6758	.0927	.5095	.9264	.3433	.7602	.1771	.5940	.0109	.8447
897	.4252	.8421	.2590	.6759	.0928	.5097	.9266	.3435	.7604	.1773	.5942	.0111	.8449
416900	15.4253	15.8422	16.2591	16.6760	17.0929	17.5098	17.9267	18.3436	18.7605	19.1774	19.5943	20.0112	20.8450

MEGACYCLES PER SECOND

H A R M O N I C S

BASIC FREQ.	24	25	26	27	28	29	30	31	32	33	34	35	36
416900	10.0056	10.4225	10.8394	11.2563	11.6732	12.0901	12.5070	12.9239	13.3408	13.7577	14.1746	14.5915	15.0084
903	.0057	.4226	.8395	.2564	.6733	.0902	.5071	.9240	.3409	.7578	.1747	.5916	.0085
906	.0057	.4227	.8396	.2565	.6734	.0903	.5072	.9241	.3410	.7579	.1748	.5917	.0086
909	.0058	.4227	.8396	.2565	.6735	.0904	.5073	.9242	.3411	.7580	.1749	.5918	.0087
912	.0059	.4228	.8397	.2566	.6735	.0904	.5074	.9243	.3412	.7581	.1750	.5919	.0088
416915	10.0060	10.4229	10.8398	11.2567	11.6736	12.0905	12.5075	12.9244	13.3413	13.7582	14.1751	14.5920	15.0089
918	.0060	.4230	.8399	.2568	.6737	.0906	.5075	.9245	.3414	.7583	.1752	.5921	.0090
921	.0061	.4230	.8399	.2569	.6738	.0907	.5076	.9246	.3415	.7584	.1753	.5922	.0092
924	.0062	.4231	.8400	.2569	.6739	.0908	.5077	.9246	.3416	.7585	.1754	.5923	.0093
927	.0062	.4232	.8401	.2570	.6740	.0909	.5078	.9247	.3417	.7586	.1755	.5924	.0094
416930	10.0063	10.4233	10.8402	11.2571	11.6740	12.0910	12.5079	12.9248	13.3418	13.7587	14.1756	14.5926	15.0095
933	.0064	.4233	.8403	.2572	.6741	.0911	.5080	.9249	.3419	.7588	.1757	.5927	.0096
936	.0065	.4234	.8403	.2573	.6742	.0911	.5081	.9250	.3420	.7589	.1758	.5928	.0097
939	.0065	.4235	.8404	.2574	.6743	.0912	.5082	.9251	.3420	.7590	.1759	.5929	.0098
942	.0066	.4236	.8405	.2574	.6744	.0913	.5083	.9252	.3421	.7591	.1760	.5930	.0099
416945	10.0067	10.4236	10.8406	11.2575	11.6745	12.0914	12.5084	12.9353	13.3422	13.7592	14.1761	14.5931	15.0100
948	.0068	.4237	.8406	.2576	.6745	.0915	.5084	.9254	.3423	.7593	.1762	.5932	.0101
951	.0068	.4238	.8407	.2577	.6746	.0916	.5085	.9255	.3424	.7594	.1763	.5933	.0102
954	.0069	.4239	.8408	.2578	.6747	.0917	.5086	.9256	.3425	.7595	.1764	.5934	.0103
957	.0070	.4239	.8409	.2578	.6748	.0918	.5087	.9257	.3426	.7596	.1765	.5935	.0105
416960	10.0070	10.4240	10.8410	11.2579	11.6749	12.0918	12.5088	12.9258	13.3427	13.7597	14.1766	14.5936	15.0106
963	.0071	.4241	.8410	.2580	.6750	.0919	.5089	.9259	.3428	.7598	.1767	.5937	.0107
966	.0072	.4242	.8411	.2581	.6750	.0920	.5090	.9259	.3429	.7599	.1768	.5938	.0108
969	.0073	.4242	.8412	.2582	.6751	.0921	.5091	.9260	.3430	.7600	.1769	.5939	.0109
972	.0073	.4243	.8413	.2582	.6752	.0922	.5092	.9261	.3431	.7601	.1770	.5940	.0110
416975	10.0074	10.4244	10.8414	11.2583	11.6753	12.0923	12.5093	12.9262	13.3432	13.7602	14.1772	14.5941	15.0111
978	.0075	.4245	.8414	.2584	.6754	.0924	.5093	.9263	.3433	.7603	.1773	.5942	.0112
981	.0075	.4245	.8415	.2585	.6755	.0924	.5094	.9264	.3434	.7604	.1774	.5943	.0113
984	.0076	.4246	.8416	.2586	.6756	.0925	.5095	.9265	.3435	.7605	.1775	.5944	.0114
987	.0077	.4247	.8417	.2586	.6756	.0926	.5096	.9266	.3436	.7606	.1776	.5945	.0115
416990	10.0078	10.4248	10.8417	11.2587	11.6757	12.0927	12.5097	12.9267	13.3437	12.7607	14.1777	14.5947	15.0116
993	.0078	.4248	.8418	.2588	.6758	.0928	.5098	.9268	.3438	.7608	.1778	.5948	.0117
996	.0079	.4249	.8419	.2589	.6759	.0929	.5099	.9269	.3439	.7609	.1779	.5949	.0119
999	.0080	.4250	.8420	.2590	.6760	.0930	.5100	.9270	.3440	.7610	.1780	.5950	.0120
417002	.0080	.4251	.8421	.2591	.6761	.0931	.5101	.9271	.3441	.7611	.1781	.5951	.0121
417005	10.0081	10.4251	10.8421	11.2591	11.6761	12.0931	12.5102	12.9272	13.3442	13.7612	14.1782	14.5952	15.0122
008	.0082	.4252	.8422	.2592	.6762	.0932	.5102	.9272	.3443	.7613	.1783	.5953	.0123
011	.0083	.4253	.8423	.2593	.6763	.0933	.5103	.9273	.3444	.7614	.1784	.5954	.0124
014	.0083	.4254	.8424	.2594	.6764	.0934	.5104	.9274	.3444	.7615	.1785	.5955	.0125
017	.0084	.4254	.8424	.2595	.6765	.0935	.5105	.9275	.3445	.7616	.1786	.5956	.0126
417020	10.0085	10.4255	10.8425	11.2595	11.6766	12.0936	12.5106	12.9276	13.3446	13.7617	14.1787	14.5957	15.0127
023	.0086	.4256	.8426	.2596	.6766	.0937	.5107	.9277	.3447	.7618	.1788	.5958	.0128
026	.0086	.4257	.8427	.2597	.6767	.0938	.5108	.9278	.3448	.7619	.1789	.5959	.0129
029	.0087	.4257	.8428	.2598	.6768	.0938	.5109	.9279	.3449	.7620	.1790	.5960	.0130
032	.0088	.4258	.8428	.2599	.6769	.0939	.5110	.9280	.3450	.7621	.1791	.5961	.0132
417035	10.0088	10.4259	10.8429	11.2599	11.6770	12.0940	12.5111	12.9281	13.3451	13.7622	14.1792	14.5962	15.0133
038	.0089	.4260	.8430	.2600	.6771	.0941	.5111	.9282	.3452	.7623	.1793	.5963	.0134
041	.0090	.4260	.8431	.2601	.6771	.0942	.5112	.9283	.3453	.7624	.1794	.5964	.0135
044	.0091	.4261	.8431	.2602	.6772	.0943	.5113	.9284	.3454	.7625	.1795	.5965	.0136
047	.0091	.4262	.8432	.2603	.6773	.0944	.5114	.9285	.3455	.7626	.1796	.5966	.0137
417050	10.0092	10.4263	10.8433	11.2604	11.6774	12.0945	12.5115	12.9286	13.3456	13.7627	14.1797	14.5968	15.0138
053	.0093	.4263	.8434	.2604	.6775	.0945	.5116	.9286	.3457	.7627	.1798	.5969	.0139
056	.0093	.4264	.8435	.2605	.6776	.0946	.5117	.9287	.3458	.7628	.1799	.5970	.0140
059	.0094	.4265	.8435	.2606	.6777	.0947	.5118	.9288	.3459	.7629	.1800	.5971	.0141
062	.0095	.4266	.8436	.2607	.6777	.0948	.5119	.9289	.3460	.7630	.1801	.5972	.0142
417065	10.0096	10.4266	10.8437	11.2608	11.6778	12.0949	12.5120	12.9290	13.3461	13.7631	14.1802	14.5973	15.0143
068	.0096	.4267	.8438	.2608	.6779	.0950	.5120	.9291	.3462	.7632	.1803	.5974	.0144
071	.0097	.4268	.8438	.2609	.6780	.0951	.5121	.9292	.3463	.7633	.1804	.5975	.0146
074	.0098	.4269	.8439	.2610	.6781	.0951	.5122	.9293	.3464	.7634	.1805	.5976	.0147
077	.0098	.4269	.8440	.2611	.6782	.0952	.5123	.9294	.3465	.7635	.1806	.5977	.0148
417080	10.0099	10.4270	10.8441	11.2612	11.6782	12.0953	12.5124	12.9295	13.3466	13.7636	14.1807	14.5978	15.0149
083	.0100	.4271	.8442	.2612	.6783	.0954	.5125	.9296	.3467	.7637	.1808	.5979	.0150
086	.0101	.4272	.8442	.2613	.6784	.0955	.5126	.9297	.3468	.7638	.1809	.5980	.0151
089	.0101	.4272	.8443	.2614	.6785	.0956	.5127	.9298	.3468	.7639	.1810	.5981	.0152
092	.0102	.4273	.8444	.2615	.6786	.0957	.5128	.9299	.3469	.7640	.1811	.5982	.0153
417095	10.0103	10.4274	10.8445	11.2616	11.6787	12.0958	12.5129	12.9299	13.3470	13.7641	14.1812	14.5983	15.0154
098	.0104	.4275	.8445	.2616	.6787	.0958	.5129	.9300	.3471	.7642	.1813	.5984	.0155
101	.0104	.4275	.8446	.2617	.6788	.0959	.5130	.9301	.3472	.7643	.1814	.5985	.0156
104	.0105	.4276	.8447	.2618	.6789	.0960	.5131	.9302	.3473	.7644	.1815	.5986	.0157
107	.0106	.4277	.8448	.2619	.6790	.0961	.5132	.9303	.3474	.7645	.1816	.5987	.0159
417110	10.0106	10.4278	10.8449	11.2620	11.6791	12.0962	12.5133	12.9304	13.3475	13.7646	14.1817	14.5989	15.0160
113	.0107	.4278	.8449	.2621	.6792	.0963	.5134	.9305	.3476	.7647	.1818	.5990	.0161
116	.0108	.4279	.8450	.2621	.6792	.0964	.5135	.9306	.3477	.7648	.1819	.5991	.0162
119	.0109	.4280	.8451	.2622	.6793	.0965	.5136	.9307	.3478	.7649	.1820	.5992	.0163
122	.0109	.4281	.8452	.2623	.6794	.0965	.5137	.9308	.3479	.7650	.1821	.5993	.0164
417125	10.0110	10.4281	10.8453	11.2624	11.6795	12.0966	12.5138	12.9209	13.3480	13.7651	14.1823	14.5994	15.0165
128	.0111	.4282	.8453	.2625	.6796	.0967	.5138	.9310	.3481	.7652	.1824	.5995	.0166
131	.0111	.4283	.8454	.2625	.6797	.0968	.5139	.9311	.3482	.7653	.1824	.5996	.0167
134	.0112	.4284	.8455	.2626	.6798	.0969	.5140	.9312	.3483	.7654	.1826	.5997	.0168
137	.0113	.4284	.8456	.2627	.6798	.0970	.5141	.9312	.3484	.7655	.1827	.5998	.0169
417140	10.0114	10.4285	10.8456	11.2628	11.6799	12.0971	12.5142	12.9313	13.3485	13.7656	14.1828	14.5999	15.0170
143	.0114	.4286	.8457	.2629	.6800	.0971	.5143	.9314	.3486	.7657	.1829	.6000	.0171
146	.0115	.4287	.8458	.2629	.6801	.0972	.5144	.9315	.3487	.7658	.1830	.6001	.0173
149	.0116	.4287	.8459	.2630	.6802	.0973	.5145	.9316	.3488	.7659	.1831	.6002	.0174
152	.0116	.4288	.8460	.2631	.6803	.0974	.5146	.9317	.3489	.7660	.1832	.6003	.0175
417155	10.0117	10.4289	10.8460	11.2632	11.6803	12.0975	12.5147	12.9318	13.3490	13.7661	14.1833	14.6004	15.0176
158	.0118	.4290	.8461	.2633	.6804	.0976	.5147	.9319	.3491	.7662	.1834	.6005	.0177
161	.0119	.4290	.8462	.2633	.6805	.0977	.5148	.9320	.3492	.7663	.1835	.6006	.0178
164	.0119	.4291	.8463	.2634	.6806	.0978	.5149	.9321	.3492	.7664	.1836	.6007	.0179
167	.0120	.4292	.8463	.2635	.6807	.0978	.5150	.9322	.3493	.7665	.1837	.6008	.0180
417170	10.0121	10.4293	10.8464	11.2636	11.6808	12.0979	12.5151	12.9323	13.3494	13.7666	14.1838	14.6010	15.0181
173	.0122	.4293	.8465	.2637	.6808	.0980	.5152	.9324	.3495	.7667	.1839	.6011	.0182
176	.0122	.4294	.8466	.2638	.6809	.0981	.5153	.9325	.3496	.7668	.1840	.6012	.0183
179	.0123	.4295	.8467	.2638	.6810	.0982	.5154	.9325	.3497	.7669	.1841	.6013	.0184
182	.0124	.4296	.8467	.2639	.6811	.0983	.5155	.9326	.3498	.7670	.1842	.6014	.0186
417185	10.0124	10.4296	10.8468	11.2640	11.6812	12.0984	12.5156	12.9327	13.3499	13.7671	14.1843	14.6015	15.0187
188	.0125	.4297	.8469	.2641	.6813	.0985	.5156	.9328	.3500	.7672	.1844	.6016	.0188
191	.0126	.4298	.8470	.2642	.6713	.0985	.5157	.9329	.3501	.7673	.1845	.6017	.0189
194	.0127	.4299	.8470	.2642	.6814	.0986	.5158	.9330	.3502	.7674	.1846	.6018	.0190
197	.0127	.4299	.8471	.2643	.6815	.0987	.5159	.9331	.3503	.7675	.1847	.6019	.0191
417200	10.0128	10.4300	10.8472	11.2644	11.6816	12.0988	12.5160	12.9332	13.3504	13.7676	14.1848	14.6020	15.0192

MEGACYCLES PER SECOND

HARMONICS

BASIC FREQ.	37	38	39	40	41	42	43	44	45	46	47	48	50
416900	15.4253	15.8422	16.2591	16.6760	17.0929	17.5098	17.9267	18.3436	18.7605	19.1774	19.5943	20.0112	20.8450
903	.4254	.8423	.2592	.6761	.0930	.5099	.9268	.3437	.7606	.1775	.5944	.0113	.8452
906	.4255	.8424	.2593	.6762	.0931	.5101	.9270	.3439	.7608	.1777	.5946	.0115	.8453
909	.4256	.8425	.2595	.6764	.0933	.5102	.9271	.3440	.7609	.1778	.5947	.0116	.8455
912	.4257	.8427	.2596	.6765	.0934	.5103	.9272	.3441	.7610	.1780	.5949	.0118	.8456
416915	15.4259	15.8428	16.2597	16.6766	17.0935	17.5104	17.9273	18.3443	18.7612	19.1781	19.5950	20.0119	20.8458
918	.4260	.8429	.2598	.6767	.0936	.5106	.9275	.3444	.7613	.1782	.5951	.0121	.8459
921	.4261	.8430	.2599	.6768	.0938	.5107	.9276	.3445	.7614	.1784	.5953	.0122	.8461
924	.4262	.8431	.2600	.6770	.0939	.5108	.9277	.3447	.7616	.1785	.5954	.0124	.8462
927	.4263	.8432	.2602	.6771	.0940	.5109	.9279	.3448	.7617	.1786	.5956	.0125	.8464
416930	15.4264	15.8433	16.2603	16.6772	17.0941	17.5111	17.9280	18.3449	18.7619	19.1788	19.5957	20.0126	20.8465
933	.4265	.8435	.2604	.6773	.0943	.5112	.9281	.3451	.7620	.1789	.5959	.0128	.8467
936	.4266	.8436	.2605	.6774	.0944	.5113	.9282	.3452	.7621	.1791	.5960	.0129	.8468
939	.4267	.8437	.2606	.6776	.0945	.5114	.9284	.3453	.7623	.1792	.5961	.0131	.8470
942	.4269	.8438	.2607	.6777	.0946	.5116	.9285	.3454	.7624	.1793	.5963	.0132	.8471
416945	15.4270	15.8439	16.2609	16.6778	17.0947	17.5117	17.9286	18.3456	18.7625	19.1795	19.5964	20.0134	20.8473
948	.4271	.8440	.2610	.6779	.0949	.5118	.9288	.3457	.7627	.1796	.5966	.0135	.8474
951	.4272	.8441	.2611	.6780	.0950	.5119	.9289	.3458	.7628	.1797	.5967	.0136	.8476
954	.4273	:8443	.2612	.6782	.0951	.5121	.9290	.3460	.7629	.1799	.5968	.0138	.8477
957	.4274	.8444	.2613	.6783	.0952	.5122	.9292	.3461	.7631	.1800	.5970	.0139	.8479
416960	15.4275	15.8445	16.2614	16.6784	17.0954	17.5123	17.9293	18.3462	18.7632	19.1802	19.5971	20.0141	20.8480
963	.4276	.8446	.2616	.6785	.0955	.5124	.9294	.3464	.7633	.1803	.5973	.0142	.8482
966	.4277	.8447	.2617	.6786	.0956	.5126	.9295	.3465	.7635	.1804	.5974	.0144	.8483
969	.4279	.8448	.2618	.6788	.0957	.5127	.9297	.3466	.7636	.1806	.5975	.0145	.8485
972	.4280	.8449	.2619	.6789	.0959	.5128	.9298	.3468	.7637	.1807	.5977	.0147	.8486
416975	15.4281	15.8451	16.2620	16.6790	17.0960	17.5130	17.9299	18.3469	18.7639	19.1809	19.5978	20.0148	20.8488
978	.4282	.8452	.2621	.6791	.0961	.5131	.9301	.3470	.7640	.1810	.5980	.0149	.8489
981	.4283	.8453	.2623	.6792	.0962	.5132	.9302	.3472	.7641	.1811	.5981	.0151	.8491
984	.4284	.8454	.2624	.6794	.0963	.5133	.9303	.3473	.7643	.1813	.5982	.0152	.8492
987	.4285	.8455	.2625	.6795	.0965	.5135	.9304	.3474	.7644	.1814	.5984	.0154	.8494
416990	15.4286	15.8456	16.2626	16.6796	17.0966	17.5136	17.9306	18.3476	18.7646	19.1815	19.5985	20.0155	20.8495
993	.4287	.8457	.2627	.6797	.0967	.5137	.9307	.3477	.7647	.1817	.5987	.0157	.8497
996	.4289	.8458	.2628	.6798	.0968	.5138	.9308	.3478	.7648	.1818	.5988	.0158	.8498
999	.4290	.8460	.2630	.6800	.0970	.5140	.9310	.3480	.7650	.1820	.5990	.0160	.8500
002	.4291	.8461	.2631	.6801	.0971	.5141	.9311	.3481	.7651	.1821	.5991	.0161	.8501
417005	15.4292	15.8462	16.2632	16.6802	17.0972	17.5142	17.9312	18.3482	18.7652	19.1822	19.5992	20.0162	20.8503
008	.4293	.8463	.2633	.6803	.0973	.5143	.9313	.3484	.7654	.1824	.5994	.0164	.8504
011	.4294	.8464	.2634	.6804	.0975	.5145	.9315	.3485	.7655	.1825	.5995	.0165	.8506
014	.4295	.8465	.2635	.6806	.0976	.5146	.9316	.3486	.7656	.1826	.5997	.0167	.8507
017	.4296	.8466	.2637	.6807	.0977	.5147	.9317	.3487	.7658	.1828	.5998	.0168	.8509
417020	15.4297	15.8468	16.2638	16.6808	17.0978	17.5148	17.9319	18.3489	18.7659	19.1829	19.5999	20.0170	20.8510
023	.4299	.8469	.2639	.6809	.0979	.5150	.9320	.3490	.7660	.1831	.6001	.0171	.8512
026	.4300	.8470	.2640	.6810	.0981	.5151	.9321	.3491	.7662	.1832	.6002	.0172	.8513
029	.4301	.8471	.2641	.6812	.0982	.5152	.9322	.3493	.7663	.1833	.6004	.0174	.8515
032	.4302	.8472	.2642	.6813	.0983	.5153	.9324	.3494	.7664	.1835	.6005	.0175	.8516
417035	15.4303	15.8473	16.2644	16.6814	17.0984	17.5155	17.9325	18.3495	18.7666	19.1836	19.6006	20.0177	20.8518
038	.4304	.8474	.2645	.6815	.0986	.5156	.9326	.3497	.7667	.1837	.6008	.0178	.8519
041	.4305	.8476	.2646	.6816	.0987	.5157	.9328	.3498	.7668	.1839	.6009	.0180	.8521
044	.4306	.8477	.2647	.6818	.0988	.5158	.9329	.3499	.7670	.1840	.6011	.0181	.8522
047	.4307	.8478	.2648	.6819	.0989	.5160	.9330	.3501	.7671	.1842	.6012	.0183	.8524
417050	15.4309	15.8479	16.2650	16.6820	17.0991	17.5161	17.9332	18.3502	18.7673	19.1843	19.6014	20.0184	20.8525
053	.4310	.8480	.2651	.6821	.0992	.5162	.9333	.3503	.7674	.1844	.6015	.0185	.8527
056	.4311	.8481	.2652	.6822	.0993	.5164	.9334	.3505	.7675	.1846	.6016	.0187	.8528
059	.4312	.8482	.2653	.6824	.0994	.5165	.9335	.3506	.7677	.1847	.6018	.0188	.8530
062	.4313	.8484	.2654	.6825	.0995	.5166	.9337	.3507	.7678	.1849	.6019	.0190	.8531
417065	15.4314	15.8485	16.2655	16.6826	17.0997	17.5167	17.9338	18.3509	18.7679	19.1850	19.6021	20.0191	20.8533
068	.4315	.8486	.2657	.6827	.0998	.5169	.9339	.3510	.7681	.1851	.6022	.0193	.8534
071	.4316	.8487	.2658	.6828	.0999	.5170	.9341	.3511	.7682	.1853	.6023	.0194	.8536
074	.4317	.8488	.2659	.6830	.1000	.5171	.9342	.3513	.7683	.1854	.6025	.0196	.8537
077	.4318	.8489	.2660	.6831	.1002	.5172	.9343	.3514	.7685	.1855	.6026	.0197	.8539
417080	15.4320	15.8490	16.2661	16.6832	17.1003	17.5174	17.9344	18.3515	18.7686	19.1857	19.6028	20.0198	20.8540
083	.4321	.8492	.2662	.6833	.1004	.5175	.9346	.3517	.7687	.1858	.6029	.0200	.8542
086	.4322	.8493	.2664	.6834	.1005	.5176	.9347	.3518	.7689	.1860	.6030	.0201	.8543
089	.4323	.8494	.2665	.6836	.1006	.5177	.9348	.3519	.7690	.1861	.6032	.0203	.8545
092	.4324	.8495	.2666	.6837	.1008	.5179	.9350	.3520	.7691	.1862	.6033	.0204	.8546
417095	15.4325	15.8496	16.2667	16.6838	17.1009	17.5180	17.9351	18.3522	18.7693	19.1864	19.6035	20.0206	20.8548
098	.4326	.8497	.2668	.6839	.1010	.5181	.9352	.3523	.7694	.1865	.6036	.0207	.8549
101	.4327	.8498	.2669	.6840	.1011	.5182	.9353	.3524	.7695	.1866	.6037	.0208	.8551
104	.4328	.8500	.2671	.6842	.1013	.5184	.9355	.3526	.7697	.1868	.6039	.0210	.8552
107	.4330	.8501	.2672	.6843	.1014	.5185	.9356	.3527	.7698	.1869	.6040	.0211	.8554
417110	15.4331	15.8502	16.2673	16.6844	17.1015	17.5186	17.9357	18.3528	18.7700	19.1871	19.6042	20.0213	20.8555
113	.4332	.8503	.2674	.6845	.1016	.5187	.9359	.3530	.7701	.1872	.6043	.0214	.8557
116	.4333	.8504	.2675	.6846	.1018	.5189	.9360	.3531	.7702	.1873	.6045	.0216	.8558
119	.4334	.8505	.2676	.6848	.1019	.5190	.9361	.3532	.7704	.1875	.6046	.0217	.8560
122	.4335	.8506	.2678	.6849	.1020	.5191	.9362	.3534	.7705	.1876	.6047	.0219	.8561
417125	15.4336	15.8508	16.2679	16.6850	17.1021	17.5193	17.9364	18.3535	18.7706	19.1878	19.6049	20.0220	20.8563
128	.4337	.8509	.2680	.6851	.1022	.5194	.9365	.3536	.7708	.1879	.6050	.0221	.8564
131	.4338	.8510	.2681	.6852	.1024	.5195	.9366	.3538	.7709	.1880	.6052	.0223	.8566
134	.4340	.8511	.2682	.6854	.1025	.5196	.9368	.3539	.7710	.1882	.6053	.0224	.8567
137	.4341	.8512	.2683	.6855	.1026	.5198	.9369	.3540	.7712	.1883	.6054	.0226	.8569
417140	15.4342	15.8513	16.2685	16.6856	17.1027	17.5199	17.9370	18.3542	18.7713	19.1884	19.6056	20.0227	20.8570
143	.4343	.8514	.2686	.6857	.1029	.5200	.9371	.3543	.7714	.1886	.6057	.0229	.8572
146	.4344	.8515	.2687	.6858	.1030	.5201	.9373	.3544	.7716	.1887	.6059	.0230	.8573
149	.4345	.8517	.2688	.6860	.1031	.5203	.9374	.3546	.7717	.1889	.6060	.0232	.8575
152	.4346	.8518	.2689	.6861	.1032	.5204	.9375	.3547	.7718	.1890	.6061	.0233	.8576
417155	15.4347	15.8519	16.2690	16.6862	17.1034	17.5205	17.9377	18.3548	18.7720	19.1891	19.6063	20.0234	20.8578
158	.4348	.8520	.2692	.6863	.1035	.5206	.9378	.3550	.7721	.1893	.6064	.0236	.8579
161	.4350	.8521	.2693	.6864	.1036	.5208	.9379	.3551	.7722	.1894	.6066	.0237	.8581
164	.4351	.8522	.2694	.6866	.1037	.5209	.9381	.3552	.7724	.1895	.6067	.0239	.8582
167	.4352	.8523	.2695	.6867	.1038	.5210	.9382	.3553	.7725	.1897	.6068	.0240	.8584
417170	15.4353	15.8525	16.2696	16.6868	17.1040	17.5211	17.9383	18.3555	18.7727	19.1898	19.6070	20.0242	20.8585
173	.4354	.8526	.2697	.6869	.1041	.5213	.9384	.3556	.7728	.1900	.6071	.0243	.8587
176	.4355	.8527	.2699	.6870	.1042	.5214	.9386	.3557	.7729	.1901	.6073	.0244	.8588
179	.4356	.8528	.2700	.6872	.1043	.5215	.9387	.3559	.7731	.1902	.6074	.0246	.8590
182	.4357	.8529	.2701	.6873	.1045	.5216	.9388	.3560	.7732	.1904	.6076	.0247	.8591
417185	15.4358	15.8530	16.2702	16.6874	17.1046	17.5218	17.9390	18.3561	18.7733	19.1905	19.6077	20.0249	20.8593
188	.4360	.8531	.2703	.6875	.1047	.5219	.9391	.3563	.7735	.1906	.6078	.0250	.8594
191	.4361	.8533	.2704	.6876	.1048	.5220	.9392	.3564	.7736	.1908	.6080	.0252	.8596
194	.4362	.8534	.2706	.6878	.1050	.5221	.9393	.3565	.7737	.1909	.6081	.0253	.8597
197	.4363	.8535	.2707	.6879	.1051	.5223	.9395	.3567	.7739	.1911	.6083	.0255	.8599
417200	15.4364	15.8536	16.2708	16.6880	17.1052	17.5224	17.9396	18.3568	18.7740	19.1912	19.6084	20.0256	20.8600

R

MEGACYCLES PER SECOND

HARMONICS

BASIC FREQ.	24	25	26	27	28	29	30	31	32	33	34	35	36
417200	10.0128	10.4300	10.8472	11.2644	11.6816	12.0988	12.5160	12.9332	13.3504	13.7676	14.1848	14.6020	15.0192
203	.0129	.4301	.8473	.2645	.6817	.0989	.5161	.9333	.3505	.7677	.1849	.6021	.0193
206	.0129	.4302	.4874	.2646	.6818	.0990	.5162	.9334	.3506	.7678	.1850	.6022	.0194
209	.0130	.4302	.8474	.2646	.6819	.0991	.5163	.9335	.3507	.7679	.1851	.6023	.0195
212	.0131	.4303	.8475	.2647	.6819	.0991	.5164	.9336	.3508	.7680	.1852	.6024	.0196
417215	10.0132	10.4304	10.8476	11.2648	11.6820	12.0992	12.5165	12.9337	13.3509	13.7681	14.1853	14.6025	15.0197
218	.0132	.4305	.8477	.2649	.6821	.0993	.5165	.9338	.3510	.7682	.1854	.6026	.0198
221	.0133	.4305	.8477	.2650	.6822	.0994	.5166	.9339	.3511	.7683	.1855	.6027	.0200
224	.0134	.4306	.8478	.2650	.6823	.0995	.5167	.9339	.3512	.7684	.1856	.6028	.0201
227	.0134	.4307	.8479	.2651	.6824	.0996	.5168	.9340	.3513	.7685	.1857	.6029	.0202
417230	10.0135	10.4308	10.8480	11.2652	11.6824	12.0997	12.5169	12.9341	13.3514	13.7686	14.1858	14.6031	15.0203
233	.0136	.4308	.8481	.2653	.6825	.0998	.5170	.9342	.3515	.7687	.1859	.6032	.0204
236	.0137	.4309	.8481	.2654	.6826	.0998	.5171	.9343	.3516	.7688	.1860	.6033	.0205
239	.0137	.4310	.4882	.2655	.6827	.0999	.5172	.9344	.3516	.7689	.1861	.6034	.0206
242	.0138	.4311	.8483	.2655	.6828	.1000	.5173	.9345	.3517	.7690	.1862	.6035	.0207
417245	10.0139	10.4311	10.8484	11.2656	11.6829	12.1001	12.5174	12.9346	13.3518	13.7691	14.1863	14.6036	15.0208
248	.0140	.4312	.8484	.2657	.6829	.1002	.5174	.9347	.3519	.7692	.1864	.6037	.0209
251	.0140	.4313	.8485	.2658	.6830	.1003	.5175	.9348	.3520	.7693	.1865	.6038	.0210
254	.0141	.4314	.8486	.2659	.6831	.1004	.5176	.9349	.3521	.7694	.1866	.6039	.0211
257	.0142	.4314	.8487	.2659	.6832	.1005	.5177	.9350	.3522	.7695	.1867	.6040	.0213
417260	10.0142	10.4315	10.8488	11.2660	11.6833	12.1005	12.5178	12.9351	13.3523	13.7696	14.1868	14.6041	15.0214
263	.0143	.4316	.8488	.2661	.6834	.1006	.5179	.9352	.3524	.7697	.1869	.6042	.0215
266	.0144	.4317	.8489	.2662	.6834	.1007	.5180	.9352	.3525	.7698	.1870	.6043	.0216
269	.0145	.4317	.8490	.2663	.6835	.1008	.5181	.9353	.3526	.7699	.1871	.6044	.0217
272	.0145	.4318	.8491	.2663	.6836	.1009	.5182	.9354	.3527	.7700	.1872	.6045	.0218
417275	10.0146	10.4319	10.8492	11.2664	11.6837	12.1010	12.5183	12.9355	13.3528	13.7701	14.1874	14.6046	15.0219
278	.0147	.4320	.8492	.2665	.6838	.1011	.5183	.9356	.3529	.7702	.1875	.6047	.0220
281	.0147	.4320	.8493	.2666	.6839	.1011	.5184	.9357	.3530	.7703	.1876	.6048	.0221
284	.0148	.4321	.8494	.2667	.6840	.1012	.5185	.9358	.3531	.7704	.1877	.6049	.0222
287	.0149	.4322	.8495	.2667	.6840	.1013	.5186	.9359	.3532	.7705	.1878	.6050	.0223
417290	10.0150	10.4323	10.8495	11.2668	11.6841	12.1014	12.5187	12.9360	13.3533	13.7706	14.1879	14.6052	15.0224
293	.0150	.4323	.8496	.2669	.6842	.1015	.5188	.9361	.3534	.7707	.1880	.6053	.0225
396	.0151	.4324	.8497	.2670	.6843	.1016	.5189	.9362	.3535	.7708	.1881	.6054	.0227
299	.0152	.4325	.8498	.2671	.6844	.1017	.5190	.9363	.3536	.7709	.1882	.6055	.0228
302	.0152	.4326	.8499	.2672	.6845	.1018	.5191	.9364	.3537	.7710	.1883	.6056	.0229
417305	10.0153	10.4326	10.8499	11.2672	11.6845	12.1018	12.5192	12.9365	13.3538	13.7711	14.1884	14.6057	15.0230
308	.0154	.4327	.8500	.2673	.6846	.1019	.5192	.9365	.3539	.7712	.1885	.6058	.0231
311	.0155	.4328	.8501	.2674	.6847	.1020	.5193	.9366	.3540	.7713	.1886	.6059	.0232
314	.0155	.4329	.8502	.2675	.6848	.1021	.5194	.9367	.3540	.7714	.1887	.6060	.0233
317	.0156	.4329	.8502	.2676	.6849	.1022	.5195	.9368	.3541	.7715	.1888	.6061	.0234
417320	10.0157	10.4330	10.8503	11.2676	11.6850	12.1023	12.5196	12.9369	13.3542	13.7716	14.1889	14.6062	15.0235
323	.0158	.4331	.8504	.2677	.6850	.1024	.5197	.9370	.3543	.7717	.1890	.6063	.0236
326	.0158	.4332	.8505	.2678	.6851	.1025	.5198	.9371	.3544	.7718	.1891	.6064	.0237
329	.0159	.4332	.8506	.2679	.6852	.1025	.5199	.9372	.3545	.7719	.1892	.6065	.0238
332	.0160	.4333	.8506	.2680	.6853	.1026	.5200	.9373	.3546	.7720	.1893	.6066	.0240
417335	10.0160	10.4334	10.8507	11.2680	11.6854	12.1027	12.5201	12.9374	13.3547	13.7721	14.1894	14.6067	15.0241
338	.0161	.4335	.8508	.2681	.6855	.1028	.5201	.9375	.3548	.7722	.1895	.6068	.0242
341	.0162	.4335	.8509	.2682	.6855	.1029	.5202	.9376	.3549	.7723	.1896	.6069	.0243
344	.0163	.4336	.8509	.2683	.6856	.1030	.5203	.9377	.3550	.7724	.1897	.6070	.0244
347	.0163	.4337	.8510	.2684	.6857	.1031	.5204	.9378	.3551	.7725	.1898	.6071	.0245
417350	10.0164	10.4338	10.8511	12.2685	11.6858	12.1032	12.5205	12.9379	13.3552	13.7726	14.1899	14.6073	15.0246
353	.0165	.4338	.8512	.2685	.6859	.1032	.5206	.9379	.3553	.7726	.1900	.6074	.0247
356	.0165	.4339	.8513	.2686	.6860	.1033	.5207	.9380	.3554	.7727	.1901	.6075	.0248
359	.0166	.4340	.8513	.2687	.6861	.1034	.5208	.9381	.3555	.7728	.1902	.6076	.0249
362	.0167	.4341	.8514	.2688	.6861	.1035	.5209	.9382	.3556	.7729	.1903	.6077	.0250
417365	10.0168	10.4341	10.8515	11.2689	11.6862	12.1036	12.5210	12.9383	13.3557	13.7730	14.1904	14.6078	15.0251
368	.0168	.4342	.8516	.2689	.6863	.1037	.5210	.9384	.3558	.7731	.1905	.6079	.0252
371	.0169	.4343	.8516	.2690	.6864	.1038	.5211	.9385	.3559	.7732	.1906	.6080	.0254
374	.0170	.4344	.8517	.2691	.6865	.1038	.5212	.9386	.3560	.7733	.1907	.6081	.0255
377	.0170	.4344	.8518	.2692	.6866	.1039	.5213	.9387	.3561	.7734	.1903	.6082	.0256
417380	10.0171	10.4345	10.8519	11.2693	11.6866	12.1040	12.5214	12.9388	13.3562	13.7735	.141909	14.6083	15.0257
383	.0172	.4346	.8520	.2693	.6867	.1041	.5215	.9389	.3563	.7736	.1910	.6084	.0258
386	.0173	.4347	.8520	.2694	.6868	.1042	.5216	.9390	.3564	.7737	.1911	.6085	.0259
389	.0173	.4347	.8521	.2695	.6869	.1043	.5217	.9391	.3564	.7738	.1912	.6086	.0260
392	.0174	.4348	.8522	.2696	.6870	.1044	.5218	.9392	.3565	.7739	.1913	.6087	.0261
417395	10.0175	10.4349	10.8523	11.2697	11.6871	12.1045	12.5219	12.9392	13.3566	13.7740	14.1914	14.6088	15.0262
398	.0176	.4350	.8523	.2697	.6871	.1045	.5219	.9393	.3567	.7741	.1915	.6089	.0263
401	.0176	.4350	.8524	.2698	.6872	.1046	.5220	.9394	.3568	.7742	.1916	.6090	.0264
404	.0177	.4351	.8525	.2699	.6873	.1047	.5221	.9395	.3569	.7743	.1917	.6091	.0265
407	.0178	.4352	.8526	.2700	.6874	.1048	.5222	.9396	.3570	.7744	.1918	.6092	.0267
417410	10.0178	10.4353	10.8527	11.2701	11.6875	12.1049	12.5223	12.9397	13.3571	13.7745	14.1919	14.6094	15.0268
413	.0179	.4353	.8527	.2702	.6876	.1050	.5224	.9398	.3572	.7746	.1920	.6095	.0269
416	.0180	.4354	.8528	.2702	.6876	.1051	.5225	.9399	.3573	.7747	.1921	.6096	.0270
419	.0181	.4355	.8529	.2703	.6877	.1052	.5226	.9400	.3574	.7748	.1922	.6097	.0271
422	.0181	.4356	.8530	.2704	.6878	.1052	.5227	.9401	.3575	.7749	.1923	.6098	.0272
417425	10.0182	10.4356	10.8531	11.2705	11.6879	12.1053	12.5228	12.9402	13.3576	13.7750	14.1925	14.6099	15.0273
428	.0183	.4357	.8531	.2706	.6880	.1054	.5228	.9403	.3577	.7751	.1926	.6100	.0274
431	.0183	.4358	.8532	.2706	.6881	.1055	.5229	.9404	.3578	.7752	.1927	.6101	.0275
434	.0184	.4359	.8533	.2707	.6882	.1056	.5230	.9405	.3579	.7753	.1928	.6102	.0276
437	.0185	.4359	.8534	.2708	.6882	.1057	.5231	.9405	.3580	.7754	.1929	.6103	.0277
417440	10.0186	10.4360	10.8534	11.2709	11.6883	12.1058	12.5232	12.9406	13.3581	13.7755	14.1930	14.6104	15.0278
443	.0186	.4361	.8535	.2710	.6884	.1058	.5233	.9407	.3582	.7756	.1931	.6105	.0279
446	.0187	.4362	.8536	.2710	.6885	.1059	.5234	.9408	.3583	.7757	.1932	.6106	.0281
449	.0188	.4362	.8537	.2711	.6886	.1060	.5235	.9409	.3584	.7758	.1933	.6107	.0282
452	.0188	.4363	.8538	.2712	.6887	.1061	.5236	.9410	.3585	.7759	.1934	.6108	.0283
417455	10.0189	10.4364	10.8538	11.2713	11.6887	12.1062	12.5237	12.9411	13.3586	13.7760	14.1935	14.6109	15.0284
458	.0190	.4365	.8539	.2714	.6888	.1063	.5237	.9412	.3587	.7761	.1936	.6110	.0285
461	.0191	.4365	.8540	.2714	.6889	.1064	.5238	.9413	.3588	.7762	.1937	.6111	.0286
464	.0191	.4366	.8541	.2715	.6890	.1065	.5239	.9414	.3588	.7763	.1938	.6112	.0287
467	.0192	.4267	.8541	.2716	.6891	.1065	.5240	.9415	.3589	.7764	.1939	.6113	.0288
417470	10.0193	10.4368	10.8542	11.2717	11.6892	12.1066	12.5241	12.9416	13.3590	13.7765	11.1940	14.6115	15.0289
473	.0194	.4368	.8543	.2718	.6892	.1067	.5242	.9417	.3591	.7766	.1941	.6116	.0290
476	.0194	.4369	.8544	.2719	.6893	.1068	.5243	.9418	.3592	.7767	.1942	.6117	.0291
479	.0195	.4370	.8545	.2719	.6894	.1069	.5244	.9418	.3593	.7768	.1943	.6118	.0292
482	.0196	.4371	.8545	.2720	.6895	.1070	.5245	.9419	.3594	.7769	.1944	.6119	.0294
417485	10.0196	10.4371	10.8546	11.2721	11.6896	12.1071	12.5246	12.9420	13.3595	13.7770	.141945	14.6120	15.0295
488	.0197	.4372	.8547	.2722	.6897	.1072	.5246	.9421	.3596	.7771	.1946	.6121	.0296
491	.0198	.4373	.8548	.2723	.6897	.1072	.5247	.9422	.3597	.7772	.1947	.6122	.0297
494	.0199	.4374	.8548	.2723	.6898	.1073	.5248	.9423	.3598	.7773	.1948	.6123	.0298
497	.0199	.4374	.8549	.2724	.6899	.1074	.5249	.9424	.3599	.7774	.1949	.6124	.0299
417500	10.0200	10.4375	10.8550	11.2725	11.6900	12.1075	12.5250	12.9425	13.3600	13.7775	14.1950	14.6125	15.0300

MEGACYCLES PER SECOND

H A R M O N I C S

BASIC FREQ.	37	38	39	40	41	42	43	44	45	46	47	48	50
417200	15.4364	15.8536	16.2708	16.6880	17.1052	17.5224	17.9396	18.3568	18.7740	19.1912	19.6084	20.0256	20.8600
203	.4365	.8537	.2709	.6881	.1053	.5225	.9397	.3569	.7741	.1913	.6085	.0257	.8602
206	.4366	.8538	.2710	.6882	.1054	.5227	.9399	.3571	.7743	.1915	.6087	.0259	.8603
209	.4367	.8539	.2712	.6884	.1056	.5228	.9400	.3572	.7744	.1916	.6088	.0260	.8605
212	.4368	.8541	.2713	.6885	.1957	.5229	.9401	.3573	.7745	.1918	.6090	.0262	.8606
417215	15.4370	15.8542	16.2714	16.6886	17.1058	17.5230	17.9402	18.3575	18.7747	19.1919	19.6091	20.0263	20.8608
218	.4371	.8543	.2715	.6887	.1059	.5232	.9404	.3576	.7748	.1920	.6092	.0265	.8609
221	.4372	.8544	.2716	.6888	.1061	.5233	.9405	.3577	.7749	.1922	.6094	.0266	.8611
224	.4373	.8545	.2717	.6890	.1062	.5234	.9406	.3579	.7751	.1923	.6095	.0268	.8612
227	.4374	.8546	.2719	.6891	.1063	.5235	.9408	.3580	.7752	.1924	.6097	.0269	.8614
417230	15.4375	15.8547	16.2720	16.6892	17.1064	17.5237	17.9409	18.3581	18.7754	19.1926	19.6098	20.0270	20.8615
233	.4376	.8549	.2721	.6893	.1066	.5238	.9410	.3583	.7755	.1927	.6100	.0272	.8617
236	.4377	.8550	.2722	.6894	.1067	.5239	.9411	.3584	.7756	.1929	.6101	.0273	.8618
239	.4378	.8551	.2723	.6896	.1068	.5240	.9413	.3585	.7758	.1930	.6102	.0275	.8620
242	.4380	.8552	.2724	.6897	.1069	.5242	.9414	.3586	.7759	.1931	.6104	.0276	.8621
417245	15.4381	15.8553	16.2726	16.6898	17.1070	17.5243	17.9415	18.3588	18.7760	19.1933	19.6105	20.0278	20.8623
248	.4382	.8554	.2727	.6899	.1072	.5244	.9417	.3589	.7762	.1934	.6107	.0279	.8624
251	.4383	.8555	.2728	.6900	.1073	.5245	.9418	.3590	.7763	.1935	.6108	.0280	.8626
254	.4384	.8557	.2729	.6902	.1074	.5247	.9419	.3592	.7764	.1937	.6109	.0282	.8627
257	.4385	.8558	.2730	.6903	.1075	.5248	.9421	.3593	.7766	.1938	.6111	.0283	.8629
417260	15.4386	15.8559	16.2731	16.6904	17.1077	17.5249	17.9422	18.3594	18.7767	19.1940	19.6112	20.0285	20.8630
263	.4387	.8560	.2733	.6905	.1078	.5250	.9423	.3596	.7768	.1941	.6114	.0286	.8632
266	.4388	.8561	.2734	.6906	.1079	.5252	.9424	.3597	.7770	.1942	.6115	.0288	.8633
269	.4390	.8562	.2735	.6908	.1080	.5253	.9426	.3598	.7771	.1944	.6116	.0289	.8635
272	.4391	.8563	.2736	.6909	.1082	.5254	.9427	.3600	.7772	.1945	.6118	.0291	.8636
417275	15.4392	15.8565	16.2737	16.6910	17.1083	17.5256	17.9428	18.3601	18.7774	19.1947	19.6119	20.0292	2.08638
278	.4393	.8566	.2738	.6911	.1084	.5257	.9430	.3602	.7775	.1948	.6121	.0293	.8639
281	.4394	.8567	.2740	.6912	.1085	.5258	.9431	.3604	.7776	.1949	.6122	.0295	.8641
284	.4395	.8568	.2741	.6914	.1086	.5259	.9432	.3605	.7778	.1951	.6123	.0296	.8642
287	.4396	.8569	.2742	.6915	.1088	.5261	.9433	.3606	.7779	.1952	.6125	.0298	.8644
417290	15.4397	15.8570	16.2743	16.6916	17.1089	17.5262	17.9435	18.3608	18.7781	19.1953	19.6126	20.0299	20.8645
293	.4398	.8571	.2744	.6917	.1090	.5263	.9436	.3609	.7782	.1955	.6128	.0301	.8647
296	.4400	.8572	.2745	.6918	.1091	.5264	.9437	.3610	.7783	.1956	.6129	.0302	.8648
299	.4401	.8574	.2747	.6920	.1093	.5266	.9439	.3612	.7785	.1958	.6131	.0304	.8650
302	.4402	.8575	.2748	.6921	.1094	.5267	.9440	.3613	.7786	.1959	.6132	.0305	.8651
417305	15.4403	15.8576	16.2749	16.6922	17.1095	17.5268	17.9441	18.3614	18.7787	19.1960	19.6133	20.0306	20.8653
308	.4404	.8577	.2750	.6923	.1096	.5269	.9442	.3616	.7789	.1962	.6135	.0308	.8654
311	.4405	.8578	.2751	.6924	.1098	.5271	.9444	.3617	.7790	.1963	.6136	.0309	.8656
314	.4406	.8579	.2752	.6926	.1099	.5272	.9445	.3618	.7791	.1964	.6138	.0311	.8657
317	.4407	.8580	.2754	.6927	.1100	.5273	.9446	.3619	.7793	.1966	.6139	.0312	.8659
417320	15.4408	15.8582	16.2755	16.6928	17.1101	17.5274	17.9448	18.3621	18.7794	19.1967	19.6140	20.0314	20.8660
323	.4410	.8583	.2756	.6929	.1102	.5276	.9449	.3622	.7795	.1969	.6142	.0315	.8662
326	.4411	.8584	.2757	.6930	.1104	.5277	.9450	.3623	.7797	.1970	.6143	.0316	.8663
329	.4412	.8585	.2758	.6932	.1105	.5278	.9451	.3625	.7798	.1971	.6145	.0318	.8665
332	.4413	.8586	.2759	.6933	.1106	.5279	.9453	.3626	.7799	.1973	.6146	.0319	.8666
417335	15.4414	15.8587	16.2761	16.6934	17.1107	17.5281	17.9454	18.3627	18.7801	19.1974	19.6147	20.0321	20.8668
338	.4415	.8588	.2762	.6935	.1109	.5282	.9455	.3629	.7802	.1975	.6149	.0322	.8669
341	.4416	.8590	.2763	.6936	.1110	.5283	.9457	.3630	.7803	.1977	.6150	.0324	.8671
344	.4417	.8591	.2764	.6938	.1111	.5284	.9458	.3631	.7805	.1978	.6152	.0325	.8672
347	.4418	.8592	.2765	.6939	.1112	.5286	.9459	.3633	.7806	.1980	.6153	.0327	.8674
417350	15.4420	15.8593	16.2767	16.6940	17.1114	17.5287	17.9461	18.3634	18.7808	19.1981	19.6155	20.0328	20.8675
353	.4421	.8594	.2768	.6941	.1115	.5288	.9462	.3635	.7809	.1982	.6156	.0329	.8677
356	.4422	.8595	.2769	.6942	.1116	.5290	.9463	.3637	.7810	.1984	.6157	.0331	.8678
359	.4423	.8596	.2770	.6944	.1117	.5291	.9464	.3638	.7812	.1985	.6159	.0332	.8680
362	.4424	.8598	.2771	.6945	.1118	.5292	.9466	.3639	.7813	.1987	.6160	.0334	.8681
417365	15.4425	15.8599	16.2772	16.6946	17.1120	17.5293	17.9467	18.3641	18.7814	19.1988	19.6162	20.0335	20.8683
368	.4426	.8600	.2774	.6947	.1121	.5295	.9468	.3642	.7816	.1989	.6163	.0337	.8684
371	.4427	.8601	.2775	.6948	.1122	.5296	.9470	.3643	.7817	.1991	.6164	.0338	.8686
374	.4428	.8602	.2776	.6950	.1123	.5297	.9471	.3645	.7818	.1992	.6166	.0340	.8687
377	.4429	.8603	.2777	.6951	.1125	.5298	.9472	.3646	.7820	.1993	.6167	.0341	.8689
417380	15.4431	15.8604	16.2778	16.6952	17.1126	17.5300	17.9473	18.3647	18.7821	19.1995	19.6169	20.0342	20.8690
383	.4432	.8606	.2779	.6953	.1127	.5301	.9475	.3649	.7822	.1996	.6170	.0344	.8692
386	.4433	.8607	.2781	.6954	.1128	.5302	.9476	.3650	.7824	.1998	.6171	.0345	.8693
389	.4434	.8608	.2782	.6956	.1129	.5303	.9477	.3651	.7825	.1999	.6173	.0347	.8695
392	.4435	.8609	.2783	.6957	.1131	.5305	.9479	.3652	.7826	.2000	.6174	.0348	.8696
417395	15.4436	15.8610	16.2784	16.6958	17.1132	17.5306	17.9480	18.3654	18.7828	19.2002	19.6176	20.0350	20.8698
398	.4437	.8611	.2785	.6959	.1133	.5307	.9481	.3655	.7829	.2003	.6177	.0351	.8699
401	.4438	.8612	.2786	.6960	.1134	.5308	.9482	.3656	.7830	.2004	.6178	.0352	.8701
404	.4439	.8614	.2788	.6962	.1136	.5310	.9484	.3658	.7832	.2006	.6180	.0354	.8702
407	.4441	.8615	.2789	.6963	.1137	.5311	.9485	.3659	.7833	.2007	.6181	.0355	.8704
417410	15.4442	15.8616	16.2790	16.6964	17.1138	17.5312	17.9486	18.3660	18.7835	19.2009	19.6183	20.0357	20.8705
413	.4443	.8617	.2791	.6965	.1139	.5313	.9488	.3662	.7836	.2010	.6184	.0358	.8707
416	.4444	.8618	.2792	.6966	.1141	.5315	.9489	.3663	.7837	.2011	.6186	.0360	.8708
419	.4445	.8619	.2793	.6968	.1142	.5316	.9490	.3664	.7839	.2013	.6187	.0361	.8710
422	.4446	.8620	.2795	.6969	.1143	.5317	.9491	.3666	.7840	.2014	.6188	.0363	.8711
417425	15.4447	15.8622	16.2796	16.6970	17.1144	17.5319	17.9493	18.3667	18.7841	19.2016	19.6190	20.0364	20.8713
428	.4448	.8623	.2797	.6971	.1145	.5320	.9494	.3668	.7843	.2017	.6191	.0365	.8714
431	.4449	.8524	.2798	.6972	.1147	.5321	.9495	.3670	.7844	.2018	.6193	.0367	.8716
434	.4451	.8625	.2799	.6974	.1148	.5322	.9497	.3671	.7845	.2020	.6194	.0368	.8717
437	.4452	.8626	.2800	.6975	.1149	.5324	.9498	.3672	.7847	.2021	.6195	.0370	.8719
417440	15.4453	15.8627	16.2802	16.6976	17.1150	17.5325	17.9499	18.3674	18.7848	19.2022	19.6197	20.0371	20.8720
443	.4454	.8628	.2803	.6977	.1152	.5326	.9500	.3675	.7849	.2024	.6198	.0373	.8722
446	.4455	.8629	.2804	.6978	.1153	.5327	.9502	.3676	.7851	.2025	.6200	.0374	.8723
449	.4456	.8631	.2805	.6980	.1154	.5329	.9503	.3678	.7852	.2027	.6201	.0376	.8725
452	.4457	.8632	.2806	.6981	.1155	.5330	.9504	.3679	.7853	.2028	.6202	.0377	.8726
417455	15.4458	15.8633	16.2807	16.6982	17.1157	17.5331	17.9506	18.3680	18.7855	19.2029	19.6204	20.0378	20.8728
458	.4459	.8634	.2809	.6983	.1158	.5332	.9507	.3682	.7856	.2031	.6205	.0380	.8729
461	.4461	.8635	.2810	.6984	.1159	.5334	.9508	.3683	.7857	.2032	.6207	.0381	.8731
464	.4462	.8636	.2811	.6986	.1160	.5335	.9510	.3684	.7859	.2033	.6208	.0383	.8732
467	.4463	.8637	.2812	.6987	.1161	.5336	.9511	.3685	.7860	.2035	.6209	.0384	.8734
417470	15.4464	15.8639	16.2813	16.6988	17.1163	17.5337	17.9512	18.3687	18.7862	19.2036	19.6211	20.0386	20.8735
473	.4465	.8640	.2814	.6989	.1164	.5339	.9513	.3688	.7863	.2038	.6212	.0387	.8737
476	.4466	.8641	.2816	.6990	.1165	.5340	.9515	.3689	.7864	.2039	.6214	.0388	.8738
479	.4467	.8642	.2817	.6992	.1166	.5341	.9516	.3691	.7866	.2040	.6215	.0390	.8740
482	.4468	.8643	.2818	.6993	.1168	.5342	.9517	.3692	.7867	.2042	.6217	.0391	.8741
417485	15.4469	15.8644	16.2819	16.6994	17.1169	17.5344	17.9519	18.3693	18.7868	19.2043	19.6218	20.0393	20.8743
488	.4471	.8645	.2820	.6995	.1170	.5345	.9520	.3695	.7870	.2044	.6219	.0394	.8744
491	.4472	.8647	.2821	.6996	.1171	.5346	.9521	.3696	.7871	.2046	.6221	.0396	.8746
494	.4473	.8648	.2823	.6998	.1173	.5347	.9522	.3697	.7872	.2047	.6222	.0397	.8747
497	.4474	.8649	.2824	.6999	.1174	.5349	.9524	.3699	.7874	.2049	.6224	.0399	.8749
417500	15.4475	15.8650	16.2825	16.7000	17.1175	17.5350	17.9525	18.3700	18.7875	19.2050	19.6225	20.0400	20.8750

MEGACYCLES PER SECOND

HARMONICS

BASIC FREQ.	24	25	26	27	28	29	30	31	32	33	34	35	36
417500	10.0200	10.4375	10.8550	11.2725	11.6900	12.1075	12.5250	12.9425	13.3600	13.7775	14.1950	14.6125	15.0300
503	.0201	.4376	.8551	.2726	.6901	.1076	.5251	.9426	.3601	.7776	.1951	.6126	.0301
506	.0201	.4377	.8552	.2727	.6902	.1077	.5252	.9427	.3602	.7777	.1952	.6127	.0302
509	.0202	.4377	.8552	.2727	.6903	.1078	.5253	.9428	.3603	.7778	.1953	.6128	.0303
512	.0203	.4378	.8553	.2728	.6903	.1078	.5254	.9429	.3604	.7779	.1954	.6129	.0304
417515	10.0204	10.4379	10.8554	11.2729	11.6904	12.1079	12.5255	12.9430	13.3605	13.7780	14.1955	14.6130	15.0305
518	.0204	.4380	.8555	.2730	.6905	.1080	.5255	.9431	.3606	.7781	.1956	.6131	.0306
521	.0205	.4380	.8555	.2731	.6906	.1081	.5256	.9432	.3607	.7782	.1957	.6132	.0308
524	.0206	.4381	.8556	.2731	.6907	.1082	.5257	.9432	.3608	.7783	.1958	.6133	.0309
527	.0206	.4382	.8557	.2732	.6908	.1083	.5258	.9433	.3609	.7784	.1959	.6134	.0310
417530	10.0207	10.4383	10.8558	11.2733	11.6908	12.1084	12.5259	12.9434	13.3610	13.7785	14.1960	14.6136	15.0311
533	.0208	.4383	.8559	.2734	.6909	.1085	.5260	.9435	.3611	.7786	.1961	.6137	.0312
536	.0209	.4384	.8559	.2735	.6910	.1085	.5261	.9436	.3612	.7787	.1962	.6138	.0313
539	.0209	.4385	.8560	.2736	.6911	.1086	.5262	.9437	.3612	.7788	.1963	.6139	.0314
542	.0210	.4386	.8561	.2736	.6912	.1087	.5263	.9438	.3613	.7789	.1964	.6140	.0315
417545	10.0211	10.4386	10.8562	11.2737	11.6913	12.1088	12.5264	12.9439	13.3614	13.7790	14.1965	14.6141	15.0316
548	.0212	.4387	.8562	.2738	.6913	.1089	.5264	.9440	.3615	.7791	.1966	.6142	.0317
551	.0212	.4388	.8563	.2739	.6914	.1090	.5265	.9441	.3616	.7792	.1967	.6143	.0318
554	.0213	.4389	.8564	.2740	.6915	.1091	.5266	.9442	.3617	.7793	.1968	.6144	.0319
557	.0214	.4389	.8565	.2740	.6916	.1092	.5267	.9443	.3618	.7794	.1969	.6145	.0321
417560	10.0214	10.4390	10.8566	11.2741	11.6917	12.1092	12.5268	12.9444	13.3619	13.7795	14.1970	14.6146	15.0322
563	.0215	.4391	.8566	.2742	.6918	.1093	.5269	.9445	.3620	.7796	.1971	.6147	.0323
566	.0216	.4392	.8567	.2743	.6918	.1094	.5270	.9445	.3621	.7797	.1972	.6148	.0324
569	.0217	.4392	.8568	.2744	.6919	.1095	.5271	.9446	.3622	.7798	.1973	.6149	.0325
572	.0217	.4393	.8569	.2744	.6920	.1096	.5272	.9447	.3623	.7799	.1974	.6150	.0326
417575	10.0218	10.4394	10.8570	11.2745	11.6921	12.1097	12.5273	12.9448	13.3624	13.7800	14.1976	14.6151	15.0327
578	.0219	.4395	.8570	.2746	.6922	.1098	.5273	.9449	.3625	.7801	.1977	.6152	.0328
581	.0219	.4395	.8571	.2747	.6923	.1098	.5274	.9450	.3626	.7802	.1978	.6153	.0329
584	.0220	.4396	.8572	.2748	.6924	.1099	.5275	.9451	.3627	.7803	.1979	.6154	.0330
587	.0221	.4397	.8573	.2748	.6924	.1100	.5276	.9452	.3628	.7804	.1980	.6155	.0331
417590	10.0222	10.4398	10.8573	11.2749	11.6925	12.1101	12.5277	12.9453	13.3629	13.7805	14.1981	14.6157	15.0332
593	.0222	.4398	.8574	.2750	.6926	.1102	.5278	.9454	.3630	.7806	.1982	.6158	.0333
596	.0223	.4399	.8575	.2751	.6927	.1103	.5279	.9455	.3631	.7807	.1983	.6159	.0335
599	.0224	.4400	.8576	.2752	.6928	.1104	.5280	.9456	.3632	.7808	.1984	.6160	.0336
602	.0224	.4401	.8577	.2753	.6929	.1105	.5281	.9457	.3633	.7809	.1985	.6161	.0337
417605	10.0225	10.4401	10.8577	11.2753	11.6929	12.1105	12.5282	12.9458	13.3634	13.7810	14.1986	14.6162	15.0338
608	.0226	.4402	.8578	.2754	.6930	.1106	.5282	.9458	.3635	.7811	.1987	.6163	.0339
611	.0227	.4403	.8579	.2755	.6931	.1107	.5283	.9459	.3636	.7812	.1988	.6164	.0340
614	.0227	.4404	.8580	.2756	.6932	.1108	.5284	.9460	.3636	.7813	.1989	.6165	.0341
617	.0228	.4404	.8580	.2757	.6933	.1109	.5285	.9461	.3637	.7814	.1990	.6166	.0342
417620	10.0229	10.4405	10.8581	11.2757	11.6934	12.1110	12.5286	12.9462	13.3638	13.7815	14.1991	14.6167	15.0343
623	.0230	.4406	.8582	.2758	.6934	.1111	.5287	.9463	.3639	.7816	.1992	.6168	.0344
626	.0230	.4407	.8583	.2759	.6935	.1112	.5288	.9464	.3640	.7817	.1993	.6169	.0345
629	.0231	.4407	.8584	.2760	.6936	.1112	.5289	.9465	.3641	.7818	.1994	.6170	.0346
632	.0232	.4408	.8584	.2761	.6937	.1113	.5290	.9466	.3642	.7819	.1995	.6171	.0348
417635	10.0232	10.4409	10.8585	11.2761	11.6938	12.1114	12.5291	12.9467	13.3643	13.7820	14.1996	14.6172	15.0349
638	.0233	.4410	.8586	.2762	.6939	.1115	.5291	.9468	.3644	.7821	.1997	.6173	.0350
641	.0234	.4410	.8587	.2763	.6939	.1116	.5292	.9469	.3645	.7822	.1998	.6174	.0351
644	.0235	.4411	.8587	.2764	.6940	.1117	.5293	.9470	.3646	.7823	.1999	.6175	.0352
647	.0235	.4412	.8588	.2765	.6941	.1118	.5294	.9471	.3647	.7824	.2000	.6176	.0353
417650	10.0236	10.4413	10.8589	11.2766	11.6942	12.1119	12.5295	12.9472	13.3648	13.7825	14.2001	14.6178	15.0354
653	.0237	.4413	.8590	.2766	.6943	.1119	.5296	.9472	.3649	.7825	.2002	.6179	.0355
656	.0237	.4414	.8591	.2767	.6944	.1120	.5297	.9473	.3650	.7826	.2003	.6180	.0356
659	.0238	.4415	.8591	.2768	.6945	.1121	.5298	.9474	.3651	.7827	.2004	.6181	.0357
662	.0239	.4416	.8592	.2769	.6945	.1122	.5299	.9475	.3652	.7828	.2005	.6182	.0358
417665	10.0240	10.4416	10.8593	11.2770	11.6946	12.1123	12.5300	12.9476	13.3653	13.7729	13.2006	14.6183	15.0359
668	.0240	.4417	.8594	.2770	.6947	.1124	.5300	.9477	.3654	.7830	.2007	.6184	.0360
671	.0241	.4418	.8594	.2771	.6948	.1125	.5301	.9478	.3655	.7831	.2008	.6185	.0362
674	.0242	.4419	.8595	.2772	.6949	.1125	.5302	.9479	.3656	.7832	.2009	.6186	.0363
677	.0242	.4419	.8596	.2773	.6950	.1126	.5303	.9480	.3657	.7833	.2010	.6187	.0364
417680	10.0243	10.4420	10.8597	11.2774	11.6950	12.1127	12.5304	12.9481	13.3658	13.7834	14.2011	14.6188	15.0365
683	.0244	.4421	.8598	.2774	.6951	.1128	.5305	.9482	.3659	.7835	.2012	.6189	.0366
686	.0245	.4422	.8598	.2775	.6952	.1129	.5306	.9483	.3660	.7836	.2013	.6190	.0367
689	.0245	.4422	.8599	.2776	.6953	.1130	.5307	.9484	.3660	.7837	.2014	.6191	.0368
692	.0246	.4423	.8600	.2777	.6954	.1131	.5308	.9485	.3661	.7838	.2015	.6192	.0369
417695	10.0247	10.4424	10.8601	11.2778	11.6955	12.1132	12.5309	12.9485	13.3662	13.7839	14.2016	14.6193	15.0370
698	.0248	.4425	.8601	.2778	.6955	.1132	.5309	.9486	.3663	.7840	.2017	.6194	.0371
701	.0248	.4425	.8602	.2779	.6956	.1133	.5310	.9487	.3664	.7841	.2018	.6195	.0372
704	.0249	.4426	.8603	.2780	.6957	.1134	.5311	.9488	.3665	.7842	.2019	.6196	.0373
707	.0250	.4427	.8604	.2781	.6958	.1135	.5312	.9489	.3666	.7843	.2020	.6197	.0375
417710	10.0250	10.4428	10.8605	11.2782	11.6959	12.1136	12.5313	12.9490	13.3667	13.7844	14.2021	14.6199	15.0376
713	.0251	.4428	.8605	.2783	.6960	.1137	.5314	.9491	.3668	.7845	.2022	.6200	.0377
716	.0252	.4429	.8606	.2783	.6960	.1138	.5315	.9492	.3669	.7846	.2023	.6201	.0378
719	.0253	.4430	.8607	.2784	.6961	.1139	.5316	.9493	.3670	.7847	.2024	.6202	.0379
722	.0253	.4431	.8608	.2785	.6962	.1139	.5317	.9494	.3671	.7848	.2025	.6203	.0380
417725	10.0254	10.4431	10.8609	11.2786	11.6963	12.1140	12.5318	12.9495	13.3672	13.7849	14.2027	14.6204	15.0381
728	.0255	.4432	.8609	.2787	.6964	.1141	.5318	.9496	.3673	.7850	.2028	.6205	.0382
731	.0255	.4433	.8610	.2787	.6965	.1142	.5319	.9497	.3674	.7851	.2029	.6206	.0383
734	.0256	.4434	.8611	.2788	.6966	.1143	.5320	.9498	.3675	.7852	.2030	.6207	.0384
737	.0257	.4434	.8612	.2789	.6966	.1144	.5321	.9498	.3676	.7853	.2031	.6208	.0385
417740	10.0258	10.4435	10.8612	11.2790	11.6967	12.1145	12.5322	12.9499	13.3677	13.7854	14.2032	14.6209	15.0386
743	.0258	.4436	.8613	.2791	.6968	.1145	.5323	.9500	.3678	.7855	.2033	.6210	.0387
746	.0259	.4437	.8614	.2791	.6969	.1146	.5324	.9501	.3679	.7856	.2034	.6211	.0389
749	.0260	.4437	.8615	.2792	.6970	.1147	.5325	.9502	.3680	.7857	.2035	.6212	.0390
752	.0260	.4438	.8616	.2793	.6971	.1148	.5326	.9503	.3681	.7858	.2036	.6213	.0391
417755	10.0261	10.4439	10.8616	11.2794	11.6971	12.1149	12.5327	12.9504	13.3682	13.7859	14.2037	14.6214	15.0392
758	.0262	.4440	.8617	.2795	.6972	.1150	.5327	.9505	.3683	.7860	.2038	.6215	.0393
761	.0263	.4440	.8618	.2795	.6973	.1151	.5328	.9506	.3684	.7861	.2039	.6216	.0394
764	.0263	.4441	.8619	.2796	.6974	.1152	.5329	.9507	.3684	.7862	.2040	.6217	.0395
767	.0264	.4442	.8619	.2797	.6975	.1152	.5330	.9508	.3685	.7863	.2041	.6218	.0396
417770	10.0265	10.4443	10.8620	11.2798	11.6976	12.1153	12.5331	12.9509	13.3686	13.7864	14.2042	14.6220	15.0397
773	.0266	.4443	.8621	.2799	.6976	.1154	.5332	.9510	.3687	.7865	.2043	.6221	.0398
776	.0266	.4444	.8622	.2800	.6977	.1155	.5333	.9511	.3688	.7866	.2044	.6222	.0399
779	.0267	.4445	.8623	.2800	.6978	.1156	.5334	.9511	.3689	.7867	.2045	.6223	.0400
782	.0268	.4446	.8623	.2801	.6979	.1157	.5335	.9512	.3690	.7868	.2046	.6224	.0402
417785	10.0268	10.4446	10.8624	11.2802	11.6980	12.1158	12.5336	12.9513	13.3691	13.7869	14.2047	14.6225	15.0403
788	.0269	.4447	.8625	.2803	.6981	.1159	.5336	.9514	.3692	.7870	.2048	.6226	.0404
791	.0270	.4448	.8626	.2804	.6981	.1159	.5337	.9515	.3693	.7871	.2049	.6227	.0405
794	.0271	.4449	.8626	.2804	.6982	.1160	.5338	.9516	.3694	.7872	.2050	.6228	.0406
797	.0271	.4449	.8627	.2805	.6983	.1161	.5339	.9517	.3695	.7873	.2051	.6229	.0407
417800	10.0272	10.4450	10.8628	11.2806	11.6984	12.1162	12.5340	12.9518	13.3696	13.7874	14.2052	14.6230	15.0408

MEGACYCLES PER SECOND

HARMONICS

BASIC FREQ.	37	38	39	40	41	42	43	44	45	46	47	48	50
417500	15.4475	15.8650	16.2825	16.7000	17.1175	17.5350	17.9525	18.3700	18.7875	19.2050	19.6225	20.0400	20.8750
503	.4476	.8651	.2826	.7001	.1176	.5351	.9526	.3701	.7876	.2051	.6226	.0401	.8752
506	.4477	.8652	.2827	.7002	.1177	.5353	.9528	.3703	.7878	.2053	.6228	.0403	.8753
509	.4478	.8653	.2829	.7004	.1179	.5354	.9529	.3704	.7879	.2054	.6229	.0404	.8755
512	.4479	.8655	.2830	.7005	.1180	.5355	.9530	.3705	.7880	.2056	.6231	.0406	.8756
417515	15.4481	15.8656	16.2831	16.7006	17.1181	17.5356	17.9531	18.3707	18.7882	19.2057	19.6232	20.0407	20.8758
518	.4482	.8657	.2832	.7007	.1182	.5358	.9533	.3708	.7883	.2058	.6233	.0409	.8759
521	.4483	.8658	.2833	.7008	.1184	.5359	.9534	.3709	.7884	.2060	.6235	.0410	.8761
524	.4484	.8659	.2834	.7010	.1185	.5360	.9535	.3711	.7886	.2061	.6236	.0412	.8762
527	.4485	.8660	.2836	.7011	.1186	.5361	.9537	.3712	.7887	.2062	.6238	.0413	.8764
417530	15.4486	15.8661	16.2837	16.7012	17.1187	17.5363	17.9538	18.3713	18.7889	19.2064	19.6239	20.0414	20.8765
533	.4487	.8663	.2838	.7013	.1189	.5364	.9539	.3715	.7890	.2065	.6241	.0416	.8767
536	.4488	.8664	.2839	.7014	.1190	.5365	.9540	.3716	.7891	.2067	.6242	.0417	.8768
539	.4489	.8665	.2840	.7016	.1191	.5366	.9542	.3717	.7893	.2068	.6243	.0419	.8770
542	.4491	.8666	.2841	.7017	.1192	.5368	.9543	.3718	.7894	.2069	.6245	.0420	.8771
417545	15.4492	15.8667	16.2843	16.7018	17.1193	17.5369	17.9544	18.3720	18.7895	19.2071	19.6246	20.0422	20.8773
548	.4493	.8668	.2844	.7019	.1195	.5370	.9546	.3721	.7897	.2072	.6248	.0423	.8774
551	.4494	.8669	.2845	.7020	.1196	.5371	.9547	.3722	.7898	.2073	.6249	.0424	.8776
554	.4495	.8671	.2846	.7022	.1197	.5373	.9548	.3724	.7899	.2075	.6250	.0426	.8777
557	.4496	.8672	.2847	.7023	.1198	.5374	.9550	.3725	.7901	.2076	.6252	.0427	.8779
417560	15.4497	15.8673	16.2848	16.7024	17.1200	17.5375	17.9551	18.3726	18.7902	19.2078	19.6253	20.0429	20.8780
563	.4498	.8674	.2850	.7025	.1201	.5376	.9552	.3728	.7903	.2079	.6255	.0430	.8782
566	.4499	.8675	.2851	.7026	.1202	.5378	.9553	.3729	.7905	.2080	.6256	.0432	.8783
569	.4501	.8676	.2852	.7028	.1203	.5379	.9555	.3730	.7906	.2082	.6257	.0433	.8785
572	.4502	.8677	.2853	.7029	.1205	.5380	.9556	.3732	.7907	.2083	.6259	.0435	.8786
417575	15.4503	15.8679	16.2854	16.7030	17.1206	17.5382	17.9557	18.3733	18.7909	19.2085	19.6260	20.0436	20.8788
578	.4504	.8680	.2855	.7031	.1207	.5383	.9559	.3734	.7910	.2086	.6262	.0437	.8789
581	.4505	.8681	.2857	.7032	.1208	.5384	.9560	.3736	.7911	.2087	.6263	.0439	.8791
584	.4506	.8682	.2858	.7034	.1209	.5385	.9561	.3737	.7913	.2089	.6264	.0440	.8792
587	.4507	.8683	.2859	.7035	.1211	.5387	.9562	.3738	.7914	.2090	.6266	.0442	.8794
417590	15.4508	15.8684	16.2860	16.7036	17.1212	17.5388	17.9564	18.3740	18.7916	19.2091	19.6267	20.0443	20.8795
593	.4509	.8685	.2861	.7037	.1213	.5389	.9565	.3741	.7917	.2093	.6269	.0445	.8797
596	.4511	.8686	.2862	.7038	.1214	.5390	.9566	.3742	.7918	.2094	.6270	.0446	.8798
599	.4512	.8688	.2864	.7040	.1216	.5392	.9568	.3744	.7920	.2096	.6272	.0448	.8800
602	.4513	.8689	.2865	.7041	.1217	.5393	.9569	.3745	.7921	.2097	.6273	.0449	.8801
417605	15.4514	15.8690	16.2866	16.7042	17.1218	17.5394	17.9570	18.3746	18.7922	19.2098	19.6274	20.0450	20.8803
608	.4515	.8691	.2867	.7043	.1219	.5395	.9571	.3748	.7924	.2100	.6276	.0452	.8804
611	.4516	.8692	.2868	.7044	.1221	.5397	.9573	.3749	.7925	.2101	.6277	.0453	.8806
614	.4517	.8693	.2869	.7046	.1222	.5398	.9574	.3750	.7926	.2102	.6279	.0455	.8807
617	.4518	.8694	.2871	.7047	.1223	.5399	.9575	.3751	.7928	.2104	.6280	.0456	.8809
417620	15.4519	15.8696	16.2872	16.7048	17.1224	17.5400	17.9577	18.3753	18.7929	19.2105	19.6281	20.0458	20.8810
623	.4521	.8697	.2873	.7049	.1225	.5402	.9578	.3754	.7930	.2107	.6283	.0459	.8812
626	.4522	.8698	.2874	.7050	.1227	.5403	.9579	.3755	.7932	.2108	.6284	.0460	.8813
629	.4523	.8699	.2875	.7052	.1228	.5404	.9580	.3757	.7933	.2109	.6286	.0462	.8815
632	.4524	.8700	.2876	.7053	.1229	.5405	.9582	.3758	.7934	.2111	.6287	.0463	.8816
417635	15.4525	15.8701	16.2878	16.7054	17.1230	17.5407	17.9583	18.3759	18.7936	19.2112	19.6288	20.0465	20.8818
638	.4526	.8702	.2879	.7055	.1232	.5408	.9584	.3761	.7937	.2113	.6290	.0466	.8819
641	.4527	.8704	.2880	.7056	.1233	.5409	.9586	.3762	.7938	.2115	.6291	.0468	.8821
644	.4528	.8705	.2881	.7058	.1234	.5410	.9587	.3763	.7940	.2116	.6293	.0469	.8822
647	.4529	.8706	.2882	.7059	.1235	.5412	.9588	.3765	.7941	.2118	.6294	.0471	.8824
417650	15.4531	15.8707	16.2884	16.7060	17.1237	17.5413	17.9590	18.3766	18.7943	19.2119	19.6296	20.0472	20.8825
653	.4532	.8708	.2885	.7061	.1238	.5414	.9591	.3767	.7944	.2120	.6297	.9473	.8827
656	.4533	.8709	.2886	.7062	.1239	.5416	.9592	.3769	.7945	.2122	.6298	.0475	.8828
659	.4534	.8710	.2887	.7064	.1240	.5417	.9593	.3770	.7947	.2123	.6300	.0476	.8830
662	.4535	.8712	.2888	.7065	.1241	.5418	.9595	.3771	.7948	.2125	.6301	.0478	.8831
417665	15.4536	15.8713	16.2889	16.7066	17.1243	17.5419	17.9596	18.3773	18.7949	19.2126	19.6303	20.0479	20.8833
668	.4537	.8714	.2891	.7067	.1244	.5421	.9597	.3774	.7951	.2127	.6304	.0481	.8834
671	.4538	.8715	.2892	.7068	.1245	.5422	.9599	.3775	.7952	.2129	.6305	.0482	.8836
674	.4539	.8716	.2893	.7070	.1246	.5423	.9600	.3777	.7953	.2130	.6307	.0484	.8837
677	.4540	.8717	.2894	.7071	.1248	.5424	.9601	.3778	.7955	.2131	.6308	.0485	.8839
417680	15.4542	15.8718	16.2895	16.7072	17.1249	17.5426	17.9602	18.3779	18.7956	19.2133	19.6310	20.0486	20.8840
683	.4543	.8720	.2896	.7073	.1250	.5427	.9604	.3781	.7957	.2134	.6311	.0488	.8842
686	.4544	.8721	.2898	.7074	.1251	.5428	.9605	.3782	.7959	.2136	.6312	.0489	.8843
689	.4545	.8722	.2899	.7076	.1252	.5429	.9606	.3783	.7960	.2137	.6314	.0491	.8845
692	.4546	.8723	.2900	.7077	.1254	.5431	.9608	.3784	.7961	.2138	.6315	.0492	.8846
417695	15.4547	15.8724	16.2901	16.7078	17.1255	17.5432	17.9609	18.3786	18.7963	19.2140	19.6317	20.0494	20.8848
698	.4548	.8725	.2902	.7079	.1256	.5433	.9610	.3787	.7964	.2141	.6318	.0495	.8849
701	.4549	.8726	.2903	.7080	.1257	.5434	.9611	.3788	.7965	.2142	.6319	.0496	.8851
704	.4550	.8728	.2905	.7082	.1259	.5436	.9613	.3790	.7967	.2144	.6321	.0498	.8852
707	.4552	.8729	.2906	.7083	.1260	.5437	.9614	.3791	.7968	.2145	.6322	.0499	.8854
417710	15.4553	15.8730	16.2907	16.7084	17.1261	17.5438	17.9615	18.3792	18.7970	19.2147	19.6324	20.0501	20.8855
713	.4554	.8731	.2908	.7085	.1262	.5439	.9617	.3794	.7971	.2148	.6325	.0502	.8857
716	.4555	.8732	.2909	.7086	.1264	.5441	.9618	.3795	.7972	.2149	.6327	.0504	.8858
719	.4556	.8733	.2910	.7088	.1265	.5442	.9619	.3796	.7974	.2151	.6328	.0505	.8860
722	.4557	.8734	.2912	.7089	.1266	.5443	.9620	.3798	.7975	.2152	.6329	.0507	.8861
417725	15.4558	15.8736	16.2913	16.7090	17.1267	17.5445	17.9622	18.3799	18.7976	19.2154	19.6331	20.0508	20.8863
728	.4559	.8737	.2914	.7091	.1268	.5446	.9623	.3800	.7978	.2155	.6332	.0509	.8864
731	.4560	.8738	.2915	.7092	.1270	.5447	.9624	.3802	.7979	.2156	.6334	.0511	.8866
734	.4562	.8739	.2916	.7094	.1271	.5448	.9626	.3803	.7980	.2158	.6335	.0512	.8867
737	.4563	.8740	.2917	.7095	.1272	.5450	.9627	.3804	.7982	.2159	.6336	.0514	.8869
417740	15.4564	15.8741	16.2919	16.7096	17.1273	17.5451	17.9628	18.3806	18.7983	19.2160	19.6338	20.0515	20 8870
743	.4565	.8742	.2920	.7097	.1275	.5452	.9629	.3807	.7984	.2162	.6339	.0517	.8872
746	.4566	.8743	.2921	.7098	.1276	.5453	.9631	.3808	.7986	.2163	.6341	.0518	.8873
749	.4567	.8745	.2922	.7100	.1277	.5455	.9632	.3810	.7987	.2165	.6342	.0520	.8875
752	.4568	.8746	.2923	.7101	.1278	.5456	.9633	.3811	.7988	.2166	.6343	.0521	.8876
417755	15.4569	15.8747	16.2924	16.7102	17.1280	17.5457	17.9635	18.3812	18.7990	19.2167	19.6345	20.0522	20.8878
758	.4570	.8748	.2926	.7103	.1281	.5458	.9636	.3814	.7991	.2169	.6346	.0524	.8879
761	.4572	.8749	.2927	.7104	.1282	.5460	.9637	.3815	.7992	.2170	.6348	.0525	.8881
764	.4573	.8750	.2928	.7106	.1283	.5461	.9639	.3816	.7994	.2171	.6349	.0527	.8882
767	.4574	.8751	.2929	.7107	.1284	.5462	.9640	.3817	.7995	.2173	.6350	.0528	.8884
417770	15.4575	15.8753	16.2930	16.7108	17.1286	17.5463	17.9641	18.3819	18.7997	19.2174	19.6352	20.0530	20.8885
773	.4576	.8754	.2931	.7109	.1287	.5465	.9642	.3820	.7998	.2176	.6353	.0531	.8887
776	.4577	.8755	.2933	.7110	.1288	.5466	.9644	.3821	.7999	.2177	.6355	.0532	.8888
779	.4578	.8756	.2934	.7112	.1289	.5467	.9645	.3823	.8001	.2178	.6356	.0534	.8890
782	.4579	.8757	.2935	.7113	.1291	.5468	.9646	.3824	.8002	.2180	.6358	.0535	.8891
417785	15.4580	15.8758	16.2936	16.7114	17.1292	17.5470	17.9648	18.3825	18.8003	19.1281	19.6359	20.0537	20.8893
788	.4582	.8759	.2937	.7115	.1293	.5471	.9649	.3827	.8005	.2182	.6360	.0538	.8894
791	.4583	.8761	.2938	.7116	.1294	.5472	.9650	.3828	.8006	.2184	.6362	.0540	.8896
794	.4584	.8762	.2940	.7118	.1296	.5473	.9651	.3829	.8007	.2185	.6363	.0541	.8897
797	.4585	.8763	.2941	.7119	.1297	.5475	.9653	.3831	.8009	.2187	.6365	.0543	.8899
417800	15.4586	15.8764	16.2942	16.7120	17.1298	17.5476	17.9654	18.3832	18.8010	19.2188	19.6366	20.0544	20.8900

MEGACYCLES PER SECOND

H A R M O N I C S

BASIC FREQ.	24	25	26	27	28	29	30	31	32	33	34	35	36
417800	10.0272	10.4450	10.8628	11.2806	11.6984	12.1162	12.5340	12.9518	13.3696	13.7874	14.2052	14.6230	15.0408
803	.0273	.4451	.8629	.2807	.6985	.1163	.5341	.9519	.3697	.7875	.2053	.6231	.0409
806	.0273	.4452	.8630	.2808	.6986	.1164	.5342	.9520	.3698	.7876	.2054	.6332	.0410
809	.0274	.4452	.8630	.2808	.6987	.1165	.5343	.9521	.3699	.7877	.2055	.6233	.0411
812	.0275	.4453	.8631	.2809	.6987	.1165	.5344	.9522	.3700	.7878	.2056	.6234	.0412
417815	10.0276	10.4454	10.8632	11.2810	11.6988	12.1166	12.5345	12.9523	13.3701	13.7879	14.2057	14.6235	15.0413
818	.0276	.4455	.8633	.2811	.6989	.1167	.5345	.9524	.3702	.7880	.2058	.6236	.0414
821	.0277	.4455	.8633	.2812	.6990	.1168	.5346	.9525	.3703	.7881	.2059	.6237	.0416
824	.0278	.4456	.8634	.2812	.6991	.1169	.5347	.9525	.3704	.7882	.2060	.6238	.0417
827	.0278	.4457	.8635	.2813	.6992	.1170	.5348	.9526	.3705	.7883	.2061	.6239	.0418
417830	10.0279	10.4458	10.8636	11.2814	11.6992	12.1171	12.5349	12.9527	13.3706	13.7884	14.2062	14.6241	15.0419
833	.0280	.4458	.8637	.2815	.6993	.1172	.5350	.9528	.3707	.7885	.2063	.6242	.0420
836	.0281	.4459	.8637	.2816	.6994	.1172	.5351	.9529	.3708	.7886	.2064	.6243	.0421
839	.0281	.4460	.8638	.2817	.6995	.1173	.5352	.9530	.3708	.7887	.2065	.6244	.0422
842	.0282	.4461	.8639	.2817	.6996	.1174	.5353	.9531	.3709	.7888	.2066	.6245	.0423
417845	10.0283	10.4461	10.8640	11.2818	11.6997	12.1175	12.5354	12.9532	13.3710	13.7889	14.2067	14.6246	15.0424
848	.0284	.4462	.8640	.2819	.6997	.1176	.5354	.9533	.3711	.7890	.2068	.6247	.0425
851	.0284	.4463	.8641	.2820	.6998	.1177	.5355	.9534	.3712	.7891	.2069	.6248	.0426
854	.0285	.4464	.8642	.2821	.6999	.1178	.5356	.9535	.3713	.7892	.2070	.6249	.0427
857	.0286	.4464	.8643	.2821	.7000	.1179	.5357	.9536	.3714	.7893	.2071	.6250	.0429
417860	10.0286	10.4465	10.8644	11.2822	11.7001	12.1179	12.5358	12.9537	13.3715	13.7894	14.2072	14.6251	15.0430
863	.0287	.4466	.8644	.2823	.7002	.1180	.5359	.9538	.3716	.7895	.2073	.6252	.0431
866	.0288	.4467	.8645	.2824	.7002	.1181	.5360	.9538	.3717	.7896	.2074	.6253	.0432
869	.0289	.4467	.8646	.2825	.7003	.1182	.5361	.9539	.3718	.7897	.2075	.6254	.0433
872	.0289	.4468	.8647	.2825	.7004	.1183	.5362	.9540	.3719	.7898	.2076	.6255	.0434
417875	10.0290	10.4469	10.8648	11.2826	11.7005	12.1184	12.5363	12.9541	13.3720	13.7899	14.2078	14.6256	15.0435
878	.0291	.4470	.8648	.2827	.7006	.1185	.5363	.9542	.3721	.7900	.2079	.6257	.0436
881	.0291	.4470	.8649	.2828	.7007	.1185	.5364	.9543	.3722	.7901	.2080	.6258	.0437
884	.0292	.4471	.8650	.2829	.7008	.1186	.5365	.9544	.3723	.7902	.2081	.6259	.0438
887	.0293	.4472	.8651	.2829	.7008	.1187	.5366	.9545	.3724	.7903	.2082	.6260	.0439
417890	10.0294	10.4473	10.8651	11.2830	11.7009	12.1188	12.5367	12.9546	13.3725	13.7904	14.2083	14.6662	15.0440
893	.0294	.4473	.8652	.2831	.7010	.1189	.5368	.9547	.3726	.7905	.2084	.6263	.0441
896	.0295	.4474	.8653	.2832	.7011	.1190	.5369	.9548	.3727	.7906	.2085	.6264	.0443
899	.0296	.4475	.8654	.2833	.7012	.1191	.5370	.9549	.3728	.7907	.2086	.6265	.0444
902	.0296	.4476	.8655	.2834	.7013	.1192	.5371	.9550	.3729	.7908	.2087	.6266	.0445
417905	10.0297	10.4476	10.8655	11.2834	11.7013	12.1192	12.5372	12.9551	13.3730	13.7909	14.2088	14.6267	15.0446
908	.0298	.4477	.8656	.2835	.7014	.1193	.5372	.9551	.3731	.7910	.2089	.6268	.0447
911	.0299	.4478	.8657	.2836	.7015	.1194	.5373	.9552	.3732	.7911	.2090	.6269	.0448
914	.0299	.4479	.8658	.2837	.7016	.1195	.5374	.9553	.3732	.7912	.2091	.6270	.0449
917	.0300	.4479	.8658	.2838	.7017	.1196	.5375	.9554	.3733	.7913	.2092	.6271	.0450
417920	10.0301	10.4480	10.8659	11.2838	11.7018	12.1197	12.5376	12.9555	13.3734	13.7914	14.2093	14.6272	15.0451
923	.0302	.4481	.8660	.2839	.7018	.1198	.5377	.9556	.3735	.7915	.2094	.6273	.0452
926	.0302	.4482	.8661	.2840	.7019	.1199	.5378	.9557	.3736	.7916	.2095	.6274	.0453
929	.0303	.4482	.8662	.2841	.7020	.1199	.5379	.9558	.3737	.7917	.2096	.6275	.0454
932	.0304	.4483	.8662	.2842	.7021	.1200	.5380	.9559	.3738	.7918	.2097	.6276	.0456
417935	10.0304	10.4484	10.8663	11.2842	11.7022	12.1201	12.5381	12.9560	13.3739	13.7919	14.2098	14.6277	15.0457
938	.0305	.4485	.8664	.2843	.7023	.1202	.5381	.9561	.3740	.7920	.2099	.6278	.0458
941	.0306	.4485	.8665	.2844	.7023	.1203	.5382	.9562	.3741	.7921	.2100	.6279	.0459
944	.0307	.4486	.8665	.2845	.7024	.1204	.5383	.9563	.3742	.7922	.2101	.6180	.0460
947	.0107	.4487	.8666	.2846	.7025	.1205	.5384	.9564	.3743	.7923	.2102	.6281	.0461
417950	10.0308	10.4488	10.8667	11.2847	11.7026	12.1206	12.5385	12.9565	13.3744	13.7924	14.2103	14.6283	15.0462
953	.0309	.4488	.8668	.2847	.7027	.1206	.5286	.9565	.3745	.7924	.2104	.6284	.0463
956	.0309	.4489	.8669	.2848	.7028	.1207	.5387	.9566	.3746	.7925	.2105	.6285	.0464
959	.0310	.4490	.8669	.2849	.7029	.1208	.5388	.9567	.3747	.7926	.2106	.6286	.0465
962	.0311	.4491	.8670	.2850	.7029	.1209	.5389	.9568	.3748	.7927	.2107	.6287	.0466
417965	10.0312	10.4491	10.8671	11.2851	11.7030	12.1210	12.5390	12.9569	13.3749	13.7928	14.2108	14.6288	15.0467
968	.0312	.4492	.8672	.2851	.7031	.1211	.5390	.9570	.3750	.7929	.2109	.6289	.0468
971	.0313	.4493	.8672	.2852	.7032	.1212	.5391	.9571	.3751	.7930	.2110	.6290	.0470
974	.0314	.4494	.8673	.2853	.7033	.1212	.5392	.9572	.3752	.7931	.2111	.6291	.0471
977	.0314	.4494	.8674	.2854	.7034	.1213	.5393	.9573	.3753	.7932	.2112	.6292	.0472
417980	10.0315	10.4495	10.8675	11.2855	11.7034	12.1214	12.5394	12.9574	13.3754	13.7933	14.2113	14.6293	15.0473
983	.0316	.4496	.8676	.2855	.7035	.1215	.5395	.9575	.3755	.7934	.2114	.6294	.0474
986	.0317	.4497	.8676	.2856	.7036	.1216	.5396	.9576	.3756	.7935	.2115	.6295	.0475
989	.0317	.4497	.8677	.2857	.7037	.1217	.5397	.9577	.3756	.7936	.2116	.6296	.0476
992	.0318	.4498	.8678	.2858	.7038	.1218	.5398	.9578	.3757	.7937	.2117	.6297	.0477
417995	10.0319	10.4499	10.8679	11.2859	11.7039	12.1219	12.5399	12.9578	13.3758	13.7938	14.2118	14.6298	15.0478
998	.0320	.4500	.8679	.2859	.7039	.1219	.5399	.9579	.3759	.7939	.2119	.6299	.0479
418001	.0320	.4500	.8680	.2860	.7040	.1220	.5400	.9580	.3760	.7940	.2120	.6300	.0480
004	.0321	.4501	.8681	.2861	.7041	.1221	.5401	.9581	.3761	.7941	.2121	.6301	.0481
007	.0322	.4502	.8682	.2862	.7042	.1222	.5402	.9582	.3762	.7942	.2122	.6302	.0483
418010	10.0322	10.4503	10.8683	11,2863	11.7043	12.1223	12.5403	12.9583	13.3763	13.7943	14.2123	14.6304	15.0484
013	.0323	.4503	.8683	.2864	.7044	.1224	.5404	.9584	.3764	.7944	.2124	.6305	.0485
016	.0324	.4504	.8684	.2864	.7044	.1225	.5405	.9585	.3765	.7945	.2125	.6306	.0486
019	.0325	.4505	.8685	.2865	.7045	.1226	.5406	.9586	.3766	.7946	.2126	.6307	.0487
022	.0325	.4506	.8686	.2866	.7046	.1226	.5407	9587	.3767	.7947	.2127	.6308	.0488
418025	10.0326	10.4506	10.8687	11.2867	11.7047	12.1227	12.5408	12.9588	13.3768	13.7948	14.2129	14.6309	15.0489
028	.0327	.4507	.8687	.2868	.7048	.1228	.5408	.9589	.3769	.7949	.2130	.6310	.0490
031	.0327	.4508	.8688	.2868	.7049	.1229	.5409	.9590	.3770	.7950	.2131	.6311	.0491
034	.0328	.4509	.8689	.2869	.7050	.1230	.5410	.9591	.3771	.7951	.2132	.6312	.0492
037	.0329	.4509	.8690	.2870	.7050	.1231	.5411	.9591	.3772	.7952	.2133	.6313	.0493
418040	10.0330	10.4510	10.8690	11.2871	11.7051	12.1232	12.5412	12.9592	13.3773	13.7953	14.2134	14.6314	15.0494
043	.0330	.4511	.8691	.2872	.7052	.1232	.5413	.9593	.3774	.7954	.2135	.6315	.0495
046	.0331	.4512	.8692	.2872	.7053	.1233	.5414	.9594	.3775	.7955	.2136	.6316	.0497
049	.0332	.4512	.8693	.2873	.7054	.1234	.5415	.9595	.3776	.7956	.2137	.6317	.0498
052	.0332	.4513	.8694	.2874	.7055	.1235	.5416	.9596	.3777	.7957	.2138	.6318	.0499
418055	10.0333	10.4514	10.8694	11.2875	11.7055	12.1236	12.5417	12.9597	13.3778	13.7958	14.2139	14.6319	15.0500
058	.0334	.4515	.8695	.2876	.7056	.1237	.5417	.9598	.3779	.7959	.2140	.6320	.0501
061	.0335	.4515	.8696	.2876	.7057	.1238	.5418	.9599	.3780	.7960	.2141	.6321	.0502
064	.0335	.4516	.8697	.2877	.7058	.1239	.5419	.9600	.3780	.7961	.2142	.6322	.0503
067	.0336	.4517	.8697	.2878	.7059	.1239	.5420	.9601	.3781	.7962	.2143	.6323	.0504
418070	10.0337	10.4518	10.8698	11.2879	11.7060	12.1240	12.5421	12.9602	13.3782	13.7963	14.2144	14.6325	15.0505
073	.0338	.4518	.8699	.2880	.7060	.1241	.5422	.9603	.3783	.7964	.2145	.6326	.0506
076	.0338	.4519	.8700	.2881	.7061	.1242	.5423	.9604	.3784	.7965	.2146	.6327	.0507
079	.0339	.4520	.8701	.2881	.7062	.1243	.5424	.9604	.3785	.7966	.2147	.6328	.0508
082	.0340	.4521	.8701	.2882	.7063	.1244	.5425	.9605	.3786	.7967	.2148	.6329	.0510
418085	10.0340	10.4521	10.8702	11.2883	11.7064	12.1245	12.5426	12.9606	13.3787	13.7968	14.2149	14.6330	15.0511
088	.0341	.4522	.8703	.2884	.7065	.1246	.5426	.9607	.3788	.7969	.2150	.6331	.0512
091	.0342	.4523	.8704	.2885	.7065	.1246	.5427	.9608	.3789	.7970	.2151	.6332	.0513
094	.0343	.4524	.8704	.2885	.7066	.1247	.5428	.9609	.3790	.7971	.2152	.6333	.0514
097	.0343	.4524	.8705	.2886	.7067	.1248	.5429	.9610	.3791	.7972	.2153	.6334	.0515
418100	10.0344	10.4525	10.8706	11.2887	11.7068	12.1249	12.5430	12.9611	13.3792	13.7973	14.2154	14.6335	15.0516

H A R M O N I C S

BASIC FREQ.	37	38	39	40	41	42	43	44	45	46	47	48	50
417800	15.4586	15.8764	16.2942	16.7120	17.1298	17.5476	17.9654	18.3832	18.8010	19.2188	19.6366	20.0544	20.8900
803	.4587	.8765	.2943	.7121	.1299	.5477	.9655	.3833	.8011	.2189	.6367	.0545	.8902
806	.4588	.8766	.2944	.7122	.1300	.5479	.9657	.3835	.8013	.2191	.6369	.0547	.8903
809	.4589	.8767	.2946	.7124	.1302	.5480	.9658	.3836	.8014	.2192	.6370	.0548	.8905
812	.4590	.8769	.2947	.7125	.1303	.5481	.9659	.3837	.8015	.2194	.6372	.0550	.8906
417815	15.4592	15.8770	16.2948	16.7126	17.1304	17.5482	17.9660	18.3839	18.8017	19.2195	19.6373	20.0551	20.8908
818	.4593	.8771	.2949	.7127	.1305	.5484	.9662	.3840	.8018	.2196	.6374	.0553	.8909
821	.4594	.8772	.2950	.7128	.1307	.5485	.9663	.3841	.8019	.2198	.6376	.0554	.8911
824	.4595	.8773	.2951	.7130	.1308	.5486	.9664	.3843	.8021	.2199	.6377	.0556	.8912
827	.4596	.8774	.2953	.7131	.1309	.5487	.9666	.3844	.8022	.2200	.6379	.0557	.8914
417830	15.4597	15.8775	16.2954	16.7132	17.1310	17.5489	17.9667	18.3845	18.8024	19.2202	19.6380	20.0558	20.8915
833	.4598	.8777	.2955	.7133	.1312	.5490	.9668	.3847	.8025	.2203	.6382	.0560	.8917
836	.4599	.8778	.2956	.7134	.1313	.5491	.9669	.3848	.8026	.2205	.6383	.0561	.8918
839	.4600	.8779	.2957	.7136	.1314	.5492	.9671	.3849	.8028	.2206	.6384	.0563	.8920
842	.4602	.8780	.2958	.7137	.1315	.5494	.9672	.3850	.8029	.2207	.6386	.0564	.8921
417845	15.4603	15.8781	16.2960	16.7138	17.1316	17.5495	17.9673	18.3852	18.8030	19.2209	19.6387	20.0566	20.8923
848	.4604	.8782	.2961	.7139	.1318	.5496	.9675	.3853	.8032	.2210	.6389	.0567	.8924
851	.4605	.8783	.2962	.7140	.1319	.5497	.9676	.3854	.8033	.2211	.6390	.0568	.8926
854	.4606	.8785	.2963	.7142	.1320	.5499	.9677	.3856	.8034	.2213	.6391	.0570	.8927
857	.4607	.8786	.2964	.7143	.1321	.5500	.9679	.3857	.8036	.2214	.6393	.0571	.8929
417860	15.4608	15.8787	16.2965	16.7144	17.1323	17.5501	17.9680	18.3858	18.8037	19.2216	19.6394	20.0573	20.8930
863	.4609	.8788	.2967	.7145	.1324	.5502	.9681	.3860	.8038	.2217	.6396	.0574	.8932
866	.4610	.8789	.2968	.7146	.1325	.5504	.9682	.3861	.8040	.2218	.6397	.0576	.8933
869	.4612	.8790	.2969	.7148	.1326	.5505	.9684	.3862	.8041	.2220	.6398	.0577	.8935
872	.4613	.8791	.2970	.7149	.1328	.5506	.9685	.3864	.8042	.2221	.6400	.0579	.8936
417875	15.4614	15.8793	16.2971	16.7150	17.1329	17.5508	17.9686	18.3865	18.8044	19.2223	19.6401	20.0580	20.8938
878	.4615	.8794	.2972	.7151	.1330	.5509	.9688	.3866	.8045	.2224	.6403	.0581	.8939
881	.4616	.8795	.2974	.7152	.1331	.5510	.9689	.3868	.8046	.2225	.6404	.0583	.8941
884	.4717	.8796	.2975	.7154	.1332	.5511	.9690	.3869	.8048	.2227	.6405	.0584	.8942
887	.4618	.8797	.2976	.7155	.1334	.5513	.9691	.3870	.8049	.2228	.6407	.0586	.8944
417890	15.4619	15.8798	16.2977	16.7156	17.1335	17.5514	17.9693	18.3872	18.8051	19.2229	19.6408	20.0587	20.8945
893	.4620	.8799	.2978	.7157	.1336	.5515	.9694	.3873	.8052	.2231	.6410	.0589	.8947
896	.4622	.8800	.2979	.7158	.1337	.5516	.9695	.3874	.8053	.2232	.6411	.0590	.8948
899	.4623	.8802	.2981	.7160	.1339	.5518	.9697	.3876	.8055	.2234	.6413	.0592	.8950
902	.4624	.8803	.2982	.7161	.1340	.5519	.9698	.3877	.8056	.2235	.6414	.0593	.8951
417905	15.4625	15.8804	16.2983	16.7162	17.1341	17.5520	17.9699	18.3878	18.8057	19.2236	19.6415	20.0594	20.8953
908	.4626	.8805	.2984	.7163	.1342	.5521	.9700	.3880	.8059	.2238	.6417	.0596	.8954
911	.4627	.8806	.2985	.7164	.1344	.5523	.9702	.3881	.8060	.2239	.6418	.0597	.8956
914	.4628	.8807	.2986	.7166	.1345	.5524	.9703	.3882	.8061	.2240	.6420	.0599	.8957
917	.4629	.8808	.2988	.7167	.1346	.5525	.9704	.3883	.8063	.2242	.6421	.0600	.8959
417920	15.4630	15.8810	16.2989	16.7168	17.1347	17.5526	17.9706	18.3885	18.8064	19.2243	19.6422	20.0602	20.8960
923	.4632	.8811	.2990	.7169	.1348	.5528	.9707	.3886	.8065	.2245	.6424	.0603	.8962
926	.4633	.8812	.2991	.7170	.1350	.5529	.9708	.3887	.8067	.2246	.6425	.0604	.8963
929	.4634	.8813	.2992	.7172	.1351	.5530	.9709	.3889	.8068	.2247	.6427	.0606	.8965
932	.4635	.8814	.2993	.7173	.1352	.5531	.9711	.3890	.8069	.2249	.6428	.0607	.8966
417935	15.4636	15.8815	16.2995	16.7174	17.1353	17.5533	17.9712	18.3891	18.8071	19.2250	19.6429	20.0609	20.8968
938	.4637	.8816	.2996	.7175	.1355	.5534	.9713	.3893	.8072	.2251	.6431	.0610	.8969
941	.4638	.8818	.2997	.7176	.1356	.5535	.9715	.3894	.8073	.2253	.6432	.0612	.8971
944	.4639	.8819	.2998	.7178	.1357	.5536	.9716	.3895	.8075	.2254	.6434	.0613	.8972
947	.4640	.8820	.2999	.7179	.1358	.5538	.9717	.3897	.8076	.2256	.6435	.0615	.8974
417950	15.4642	15.8821	16.3001	16.7180	17.1360	17.5539	17.9719	18.3898	18.8078	19.2257	19.6437	20.0616	20.8975
953	.4643	.8822	.3002	.7181	.1361	.5540	.9720	.3899	.8079	.2258	.6438	.0617	.8977
956	.4644	.8823	.3003	.7182	.1362	.5542	.9721	.3901	.8080	.2260	.6439	.0619	.8978
959	.4645	.8824	.3004	.7184	.1363	.5543	.9722	.3902	.8082	.2261	.6441	.0620	.8980
962	.4646	.8826	.3005	.7185	.1364	.5544	.9724	.3903	.8083	.2263	.6442	.0622	.8981
417965	15.4647	15.8827	16.3006	16.7186	17.1366	17.5545	17.9725	18.3905	18.8084	19.2264	19.6444	20.0623	20.8983
968	.4648	.8828	.3008	.7187	.1367	.5547	.9726	.3906	.8086	.2265	.6445	.0624	.8984
971	.4649	.8829	.3009	.7188	.1368	.5548	.9728	.3907	.8087	.2267	.6446	.0625	.8986
974	.4650	.8830	.3010	.7190	.1369	.5549	.9729	.3909	.8088	.2268	.6448	.0626	.8987
977	.4651	.8831	.3011	.7191	.1371	.5550	.9730	.3910	.8090	.2269	.6449	.0629	.8989
417980	15.4653	15.8832	16.3012	16.7192	17.1372	17.5552	17.9731	18.3911	18.8091	19.2271	19.6451	10.0630	20.8990
983	.4654	.8834	.3013	.7193	.1373	.5553	.9733	.3913	.8092	.2272	.6452	.0632	.8992
986	.4655	.8835	.3015	.7194	.1374	.5554	.9734	.3914	.8094	.2274	.6453	.0633	.8993
989	.4656	.8836	.3016	.7196	.1375	.5555	.9735	.3915	.8095	.2275	.6455	.0635	.8995
992	.4657	.8837	.3017	.7197	.1377	.5557	.9737	.3916	.8096	.2276	.6456	.0636	.8996
417995	15.4658	15.8838	16.3018	16.7198	17.1378	17.5558	17.9738	18.3918	18.8098	19.2278	19.6458	20.0638	20.8998
998	.4659	.8839	.3019	.7199	.1379	.5559	.9739	.3919	.8099	.2279	.6459	.0639	.8999
418001	.4660	.8840	.3020	.7200	.1380	.5560	.9740	.3920	.8100	.2280	.6460	.0640	.9001
004	.4661	.8842	.3022	.7202	.1382	.5562	.9742	.3922	.8102	.2282	.6462	.0642	.9002
007	.4663	.8843	.3023	.7203	.1383	.5563	.9743	.3923	.8103	.2283	.6463	.0643	.9004
418010	15.4664	15.8844	16.3024	16.7204	17.1384	17.5564	17.9744	18.3924	18.8105	19.2285	19.6465	20.0645	20.9005
013	.4665	.8845	.3025	.7205	.1385	.5565	.9746	.3926	.8106	.2286	.6466	.0646	.9007
016	.4666	.8846	.3026	.7206	.1387	.5567	.9747	.3927	.8107	.2287	.6468	.0648	.9008
019	.4667	.8847	.3027	.7208	.1388	.5568	.9748	.3928	.8109	.2289	.6469	.0649	.9010
022	.4668	.8848	.3029	.7209	.1389	.5569	.9749	.3930	.8110	.2290	.6470	.0651	.9011
418025	15.4669	15.8850	16.3030	16.7210	17.1390	17.5571	17.9751	18.3931	18.8111	19.2292	19.6472	20.0652	20.9013
028	.4670	.8851	.3031	.7211	.1391	.5572	.9752	.3932	.8113	.2293	.6473	.0653	.9014
031	.4671	.8852	.3032	.7212	.1393	.5573	.9753	.3934	.8114	.2294	.6475	.0655	.9016
034	.4673	.8853	.3033	.7214	.1394	.5574	.9755	.3935	.8115	.2296	.6476	.0656	.9017
037	.4674	.8854	.3034	.7215	.1395	.5576	.9756	.3936	.8117	.2297	.6477	.0658	.9019
418040	15.4675	15.8855	16.3036	16.7216	17.1396	17.5577	17.9757	18.3938	18.8118	19.2298	19.6479	20.0659	20.9020
043	.4676	.8856	.3037	.7217	.1398	.5578	.9758	.3939	.8119	.2300	.6480	.0661	.9022
046	.4677	.8857	.3038	.7218	.1399	.5579	.9760	.3940	.8121	.2301	.6482	.0662	.9023
049	.4678	.8859	.3039	.7220	.1400	.5581	.9761	.3942	.8122	.2303	.6483	.0664	.9025
052	.4679	.8860	.3040	.7221	.1401	.5582	.9762	.3943	.8123	.2304	.6484	.0665	.9026
418055	15.4680	15.8861	16.3041	16.7222	17.1403	17.5583	17.9764	18.3944	18.8125	19.2305	19.6486	20.0666	20.9028
058	.4681	.8862	.3043	.7223	.1404	.5584	.9765	.3946	.8126	.2307	.6487	.0668	.9029
061	.5683	.8863	.3044	.7224	.1405	.5586	.9766	.3947	.8127	.2308	.6489	.0669	.9031
064	.4684	.8864	.3045	.7226	.1406	.5587	.9768	.3948	.8129	.2309	.6490	.0671	.9032
067	.4685	.8865	.3046	.7227	.1407	.5588	.9769	.3949	.8130	.2311	.6491	.0672	.9034
418070	15.4686	15.8867	16.3047	16.7228	17.1409	17.5589	17.9770	18.3951	18.8132	19.2312	19.6493	20.0674	20.9035
073	.4687	.8868	.3048	.7229	.1410	.5591	.9771	.3952	.8133	.2314	.6494	.0675	.9037
076	.4688	.8869	.3050	.7230	.1411	.5592	.9773	.3953	.8134	.2315	.6496	.0676	.9038
079	.4689	.8870	.3051	.7232	.1412	.5593	.9774	.3955	.8136	.2316	.6497	.0678	.9040
082	.4690	.8871	.3052	.7233	.1414	.5594	.9775	.3956	.8137	.2318	.6499	.0679	.9041
418085	15.4691	15.8872	16.3053	16.7234	17.1415	17.5596	17.9777	18.3957	18.8138	19.2319	19.6500	20.0681	20.9043
088	.4693	.8873	.3054	.7235	.1416	.5597	.9778	.3959	.8140	.2320	.6501	.0682	.9044
091	.4694	.8875	.3055	.7236	.1417	.5598	.9779	.3960	.8141	.2322	.6503	.0684	.9046
094	.4695	.8876	.3057	.7238	.1419	.5599	.9780	.3961	.8142	.2323	.6504	.0685	.9047
097	.4696	.8877	.3058	.7239	.1420	.5601	.9782	.3963	.8144	.2325	.6506	.0687	.9049
418100	15.4697	15.8878	16.3059	16.7240	17.1421	17.5602	17.9783	18.3964	18.8145	19.2326	19.6507	20.0688	20.9050

H A R M O N I C S

BASIC FREQ.	24	25	26	27	28	29	30	31	32	33	34	35	36
418100	10.0344	10.4525	10.8706	11.2887	11.7068	12.1249	12.5430	12.9611	13.3792	13.7973	14.2154	14.6335	15.0516
103	.0345	.4526	.8707	.2888	.7069	.1250	.5431	.9612	.3793	.7974	.2155	.6336	.0517
106	.0345	.4527	.8708	.2889	.7070	.1251	.5432	.9613	.3794	.7975	.2156	.6337	.0518
109	.0346	.4527	.8708	.2889	.7071	.1252	.5433	.9614	.3795	.7976	.2157	.6338	.0519
112	.0347	.4528	.8709	.2890	.7071	.1252	.5434	.9615	.3796	.7977	.2158	.6339	.0520
418115	10.0348	10.4529	10.8710	11.2891	11.7072	12.1253	12.5435	12.9616	13.3797	13.7978	14.2159	14.6340	15.0521
118	.0348	.4530	.8711	.2892	.7073	.1254	.5435	.9617	.3798	.7979	.2160	.6341	.0522
121	.0349	.4530	.8711	.2893	.7074	.1255	.5436	.9618	.3799	.7980	.2161	.6342	.0524
124	.0350	.4531	.8712	.2893	.7075	.1256	.5437	.9618	.3800	.7981	.2162	.6343	.0525
127	.0350	.4532	.8713	.2894	.7076	.1257	.5438	.9619	.3801	.7982	.2163	.6344	.0526
418130	10.0351	10.4533	10.8714	11.2895	11.7076	12.1258	12.5439	12.9620	13.3802	13.7983	14.2164	14.6346	15.0527
133	.0352	.4533	.8715	.2896	.7077	.1259	.5440	.9621	.3803	.7984	.2165	.6347	.0528
136	.0353	.4534	.8715	.2897	.7078	.1259	.5441	.9622	.3804	.7985	.2166	.6348	.0529
139	.0353	.4535	.8716	.2898	.7079	.1260	.5442	.9623	.3804	.7986	.2167	.6349	.0530
142	.0354	.4536	.8717	.2898	.7080	.1261	.5443	.9624	.3805	.7987	.2168	.6350	.0531
418145	10.0355	10.4536	10.8718	11.2899	11.7081	12.1262	12.5444	12.9625	13.3806	13.7988	14.2169	14.6351	15.0532
148	.0356	.4537	.8718	.2900	.7081	.1263	.5444	.9626	.3807	.7989	.2170	.6352	.0533
151	.0356	.4538	.8719	.2901	.7082	.1264	.5445	.9627	.3808	.7990	.2171	.6353	.0534
154	.0357	.4539	.8720	.2902	.7083	.1265	.5446	.9628	.3809	.7991	.2172	.6354	.0535
157	.0358	.4539	.8721	.2902	.7084	.1266	.5447	.9629	.3810	.7992	.2173	.6355	.0537
418160	10.0358	10.4540	10.8722	11.2903	11.7085	12.1266	12.5448	12.9630	13.3811	13.7993	14.2174	14.6356	15.0538
163	.0359	.4541	.8722	.2904	.7086	.1267	.5449	.9631	.3812	.7994	.2175	.6357	.0539
166	.0360	.4542	.8723	.2905	.7086	.1268	.5450	.9631	.3813	.7995	.2176	.6358	.0540
169	.0361	.4542	.8724	.2906	.7087	.1269	.5451	.9632	.3814	.7996	.2177	.6359	.0541
172	.0361	.4543	.8725	.2906	.7088	.1270	.5452	.9633	.3815	.7997	.2178	.6360	.0542
418175	10.0362	10.4544	10.8726	11.2907	11.7089	12.1271	12.5453	12.9634	13.3816	13.7998	14.2180	14.6361	15.0543
178	.0363	.4545	.8726	.2908	.7090	.1272	.5453	.9635	.3817	.7999	.2181	.6362	.0544
181	.0363	.4545	.8727	.2909	.7091	.1272	.5454	.9636	.3818	.8000	.2182	.6363	.0545
184	.0364	.4546	.8728	.2910	.7092	.1273	.5455	.9637	.3819	.8001	.2183	.6364	.0546
187	.0365	.4547	.8729	.2910	.7092	.1274	.5456	.9638	.3820	.8002	.2184	.6365	.0547
418190	10.0366	10.4548	10.8729	11.2911	11.7093	12.1275	12.5457	12.9639	13.3821	13.8003	14.2185	14.6367	15.0548
193	.0366	.4548	.8730	.2912	.7094	.1276	.5458	.9640	.3822	.8004	.2186	.6368	.0549
196	.0367	.4549	.8731	.2913	.7095	.1277	.5459	.9641	.3823	.8005	.2187	.6369	.0551
199	.0368	.4550	.8732	.2914	.7096	.1278	.5460	.9642	.3824	.8006	.2188	.6370	.0552
202	.0368	.4551	.8733	.2915	.7097	.1279	.5461	.9643	.3825	.8007	.2189	.6371	.0553
418205	10.0369	10.4551	10.8733	11.2915	11.7097	12.1279	12.5462	12.9644	13.3826	13.8008	14.2190	14.6372	15.0554
208	.0370	.4552	.8734	.2916	.7098	.1280	.5462	.9644	.3827	.8009	.2191	.6373	.0555
211	.0371	.4553	.8735	.2917	.7099	.1281	.5463	.9645	.3828	.8010	.2192	.6374	.0556
214	.0371	.4554	.8736	.2918	.7100	.1282	.5464	.9646	.3828	.8011	.2193	.6375	.0557
217	.0372	.4554	.8736	.2919	.7101	.1283	.5465	.9647	.3829	.8012	.2194	.6376	.0558
418220	10.0373	10.4555	10.8737	11.2919	11.7102	12.1284	12.5466	12.9648	13.3830	13.8013	14.2195	14.6377	15.0559
223	.0374	.4556	.8738	.2920	.7102	.1285	.5467	.9649	.3831	.8014	.2196	.6378	.0560
226	.0374	.4557	.8739	.2921	.7103	.1286	.5468	.9650	.3832	.8015	.2197	.6379	.0561
229	.0375	.4557	.8740	.2922	.7104	.1286	.5469	.9651	.3833	.8016	.2198	.6380	.0562
232	.0376	.4558	.8740	.2923	.7105	.1287	.5470	.9652	.3834	.8017	.2199	.6381	.0564
418235	10.0376	10.4559	10.8741	11.2923	11.7106	12.1288	12.5471	12.9653	13.3835	13.8018	14.2200	14.6382	15.0565
238	.0377	.4560	.8742	.2924	.7107	.1289	.5471	.9654	.3836	.8019	.2201	.6383	.0566
241	.0378	.4560	.8743	.2925	.7107	.1290	.5472	.9655	.3837	.8020	.2202	.6384	.0567
244	.0379	.4561	.8743	.2926	.7108	.1291	.5473	.9656	.3838	.8021	.2203	.6385	.0568
247	.0379	.4562	.8744	.2927	.7109	.1292	.5474	.9657	.3839	.8022	.2204	.6386	.0569
418250	10.0380	10.4563	10.8745	11.2928	11.7110	12.1293	12.5475	12.9658	13.3840	13.8023	14.2205	14.6388	15.0570
253	.0381	.4563	.8746	.2928	.7111	.1293	.5476	.9658	.3841	.8023	.2206	.6389	.0571
256	.0381	.4564	.8747	.2929	.7112	.1294	.5477	.9659	.3842	.8024	.2207	.6390	.0572
259	.0382	.4565	.8747	.2930	.7113	.1295	.5478	.9660	.3843	.8025	.2208	.6391	.0573
262	.0383	.4566	.8748	.2931	.7113	.1296	.5479	.9661	.3844	.8026	.2209	.6392	.0574
418265	10.0384	10.4566	10.8749	11.2932	11.7114	12.1297	12.5480	12.9662	13.3845	13.8027	14.2210	14.6393	15.0575
268	.0384	.4567	.8750	.2932	.7115	.1298	.5480	.9663	.3846	.8028	.2211	.6394	.0576
271	.0385	.4568	.8750	.2933	.7116	.1299	.5481	.9664	.3847	.8029	.2212	.6395	.0578
274	.0386	.4569	.8751	.2934	.7117	.1299	.5482	.9665	.3848	.8030	.2213	.6396	.0579
277	.0386	.4569	.8752	.2935	.7118	.1300	.5483	.9666	.3849	.8031	.2214	.6397	.0580
418280	10.0387	10.4570	10.8753	11.2936	11.7118	12.1301	12.5484	12.9667	13.3850	13.8032	14.2215	14.6398	15.0581
283	.0388	.4571	.8754	.2936	.7119	.1302	.5485	.9668	.3851	.8033	.2216	.6399	.0582
286	.0389	.4572	.8754	.2937	.7120	.1303	.5486	.9669	.3852	.8034	.2217	.6400	.0583
289	.0389	.4572	.8755	.2938	.7121	.1304	.5487	.9670	.3852	.8035	.2218	.6401	.0584
292	.0390	.4573	.8756	.2939	.7122	.1305	.5488	.9671	.3853	.8036	.2219	.6402	.0585
418295	10.0391	10.4574	10.8757	11.2940	11.7123	12.1306	12.5489	12.9671	13.3854	13.8037	14.2220	14.6403	15.0586
298	.0392	.4575	.8757	.2940	.7123	.1306	.5489	.9672	.3855	.8038	.2221	.6404	.0587
301	.0392	.4575	.8758	.2941	.7124	.1307	.5490	.9673	.3856	.8039	.2222	.6405	.0588
304	.0393	.4576	.8759	.2942	.7125	.1308	.5491	.9674	.3857	.8040	.2223	.6406	.0589
307	.0394	.4577	.8760	.2943	.7126	.1309	.5492	.9675	.3858	.8041	.2224	.6407	.0591
418310	10.0394	10.4578	10.8761	11.2944	11.7127	12.1310	12.5493	12.9676	13.3859	13.8042	14.2225	14.6409	15.0592
313	.0395	.4578	.8761	.2945	.7128	.1311	.5494	.9677	.3860	.8043	.2226	.6410	.0593
316	.0396	.4579	.8762	.2945	.7128	.1312	.5495	.9678	.3861	.8044	.2227	.6411	.0594
319	.0397	.4580	.8763	.2946	.7129	.1313	.5496	.9679	.3862	.8045	.2228	.6412	.0595
322	.0397	.4581	.8764	.2947	.7130	.1313	.5497	.9680	.3863	.8046	.2229	.6413	.0596
418325	10.0398	10.4581	10.8765	11.2948	11.7131	12.1314	12.5498	12.9681	13.3864	13.8047	14.2231	14.6414	15.0597
328	.0399	.4582	.8765	.2949	.7132	.1315	.5498	.9682	.3865	.8048	.2232	.6415	.0598
331	.0399	.4583	.8766	.2949	.7133	.1316	.5499	.9683	.3866	.8049	.2233	.6416	.0599
334	.0400	.4584	.8767	.2950	.7134	.1317	.5500	.9684	.3867	.8050	.2234	.6417	.0600
337	.0401	.4584	.8768	.2951	.7134	.1318	.5501	.9684	.3868	.8051	.2235	.6418	.0601
418340	10.0402	10.4585	10.8768	11.2952	11.7135	12.1319	12.5502	12.9685	13.3869	13.8052	14.2236	14.6419	15.0602
343	.0402	.4586	.8769	.2953	.7136	.1319	.5503	.9686	.3870	.8053	.2237	.6420	.0603
346	.0403	.4587	.8770	.2953	.7137	.1320	.5504	.9687	.3871	.8054	.2238	.6421	.0605
349	.0404	.4587	.8771	.2954	.7138	.1321	.5505	.9688	.3872	.8055	.2239	.6422	.0606
352	.0404	.4588	.8772	.2955	.7139	.1322	.5506	.9689	.3873	.8056	.2240	.6423	.0607
418355	10.0405	10.4589	10.8772	11.2956	11.7139	12.1323	12.5507	12.9690	13.3874	13.8057	14.2241	14.6424	15.0608
358	.0406	.4590	.8773	.2957	.7140	.1324	.5507	.9691	.3875	.8058	.2242	.6425	.0609
361	.0407	.4590	.8774	.2957	.7141	.1325	.5508	.9692	.3876	.8059	.2243	.6426	.0610
364	.0407	.4591	.8775	.2958	.7142	.1326	.5509	.9693	.3876	.8060	.2244	.6427	.0611
367	.0408	.4592	.8775	.2959	.7143	.1326	.5510	.9694	.3877	.8061	.2245	.6428	.0612
418370	10.0409	10.4593	10.8776	11.2960	11.7144	12.1327	12.5511	12.9695	13.3878	13.8062	14.2246	14.6430	15.0613
373	.0410	.4593	.8777	.2961	.7144	.1328	.5512	.9696	.3879	.8063	.2247	.6431	.0614
376	.0410	.4594	.8778	.2962	.7145	.1329	.5513	.9697	.3880	.8064	.2248	.6432	.0615
379	.0411	.4595	.8779	.2962	.7146	.1330	.5514	.9697	.3881	.8065	.2249	.6433	.0616
382	.0412	.4596	.8779	.2963	.7147	.1331	.5515	.9698	.3882	.8066	.2250	.6434	.0618
418385	10.0412	10.4596	10.8780	11.2964	11.7148	12.1332	12.5516	12.9699	13.3883	13.8067	14.2251	14.6435	15.0619
388	.0413	.4597	.8781	.2965	.7149	.1333	.5516	.9700	.3884	.8068	.2252	.6436	.0620
391	.0414	.4598	.8782	.2966	.7149	.1333	.5517	.9701	.3885	.8069	.2253	.6437	.0621
394	.0415	.4599	.8782	.2966	.7150	.1334	.5518	.9702	.3886	.8070	.2254	.6438	.0622
397	.0415	.4599	.8783	.2967	.7151	.1335	.5519	.9703	.3887	.8071	.2255	.6439	.0623
418400	10.0416	10.4600	10.8784	11.2968	11.7152	12.1336	12.5520	12.9704	13.3888	13.8072	14.2256	14.6440	15.0624

MEGACYCLES PER SECOND

HARMONICS

BASIC FREQ.	37	38	39	40	41	42	43	44	45	46	47	48	50
418100	15.4697	15.8878	16.3059	16.7240	17.1421	17.5602	17.9783	18.3964	18.8145	19.2326	19.6507	20.0688	20.9050
103	.4698	.8879	.3060	.7241	.1422	.5603	.9784	.3965	.8146	.2327	.6508	.0689	.9052
106	.4699	.8880	.3061	.7242	.1423	.5605	.9786	.3967	.8148	.2329	.6510	.0691	.9053
109	.4700	.8881	.3063	.7244	.1425	.5606	.9787	.3968	.8149	.2330	.6511	.0692	.9055
112	.4701	.8883	.3064	.7245	.1426	.5607	.9788	.3969	.8150	.2332	.6513	.0694	.9056
418115	15.4703	15.8884	16.3065	16.7246	17.1427	17.5608	17.9789	18.3971	18.8152	19.2333	19.6514	20.0695	20.9058
118	.4704	.8885	.3066	.7247	.1428	.5610	.9791	.3972	.8153	.2334	.6515	.0697	.9059
121	.4705	.8886	.3067	.7248	.1430	.5611	.9792	.3973	.8154	.2336	.6517	.0698	.9061
124	.4706	.8887	.3068	.7250	.1431	.5612	.9793	.3975	.8156	.2337	.6518	.0700	.9062
127	.4707	.8888	.3070	.7251	.1432	.5613	.9795	.3976	.8157	.2338	.6520	.0701	.9064
418130	15.4708	15.8889	16.3071	16.7252	17.1433	17.5615	17.9796	18.3977	18.8159	19.2340	19.6521	20.0702	20.9065
133	.4709	.8891	.3072	.7253	.1435	.5616	.9797	.3979	.8160	.2341	.6523	.0704	.9067
136	.4710	.8892	.3073	.7254	.1436	.5617	.9798	.3980	.8161	.2343	.6524	.0705	.9068
139	.4711	.8893	.3074	.7256	.1437	.5618	.9800	.3981	.8163	.2344	.6525	.0707	.9070
142	.4713	.8894	.3075	.7257	.1438	.5620	.9801	.3982	.8164	.2345	.6527	.0708	.9071
418145	15.4714	15.8895	16.3077	16.7258	17.1439	17.5621	17.9802	18.3984	18.8165	19.2347	19.6528	20.0710	20.9073
148	.4715	.8896	.3078	.7259	.1441	.5622	.9804	.3985	.8167	.2348	.6530	.0711	.9074
151	.4716	.8897	.3079	.7260	.1442	.5623	.9805	.3986	.8168	.2349	.6531	.0712	.9076
154	.4717	.8899	.3080	.7262	.1443	.5625	.9806	.3988	.8169	.2351	.6532	.0714	.9077
157	.4718	.8900	.3081	.7263	.1444	.5626	.9808	.3989	.8171	.2352	.6534	.0715	.9079
418160	15.4719	15.8901	16.3082	16.7264	17.1446	17.5627	17.9809	18.3990	18.8172	19.2354	19.6535	20.0717	20.9080
163	.4720	.8902	.3084	.7265	.1447	.5628	.9810	.3992	.8173	.2355	.6537	.0718	.9082
166	.4721	.8903	.3085	.7266	.1448	.5630	.9811	.3993	.8175	.2356	.6538	.0720	.9083
169	.4723	.8904	.3086	.7268	.1449	.5631	.9813	.3994	.8176	.2358	.6539	.0721	.9085
172	.4724	.8905	.3087	.7269	.1451	.5632	.9814	.3996	.8177	.2359	.6541	.0723	.9086
418175	15.4725	15.8907	16.3088	16.7270	17.1452	17.5634	17.9815	18.3997	18.8179	19.2361	19.6542	20.0724	20.9088
178	.4726	.8908	.3089	.7271	.1453	.5635	.9817	.3998	.8180	.2362	.6544	.0725	.9089
181	.4727	.8909	.3091	.7272	.1454	.5636	.9818	.4000	.8181	.2363	.6545	.0727	.9091
184	.4728	.8910	.3092	.7274	.1455	.5637	.9819	.4001	.8183	.2365	.6546	.0728	.9092
187	.4729	.8911	.3093	.7275	.1457	.5639	.9820	.4002	.8184	.2366	.6548	.0730	.9094
418190	15.4730	15.8912	16.3094	16.7276	17.1458	17.5640	17.9822	18.4004	18.8186	19.2367	19.6549	20.0731	20.9095
193	.4731	.8913	.3095	.7277	.1459	.5641	.9823	.4005	.8187	.2369	.6551	.0733	.9097
196	.4733	.8914	.3096	.7278	.1460	.5642	.9824	.4006	.8188	.2370	.6552	.0734	.9098
199	.4734	.8916	.3098	.7280	.1462	.5644	.9826	.4008	.8190	.2372	.6554	.0736	.9100
202	.4735	.8917	.3099	.7281	.1463	.5645	.9827	.4009	.8191	.2373	.6555	.0737	.9101
418205	15.4736	15.8918	16.3100	16.7282	17.1464	17.5646	17.9828	18.4010	18.8192	19.2374	19.6556	20.0738	20.9103
208	.4737	.8919	.3101	.7283	.1465	.5647	.9829	.4012	.8194	.2376	.6558	.0740	.9104
211	.4738	.8920	.3102	.7284	.1467	.5649	.9831	.4013	.8195	.2377	.6559	.0741	.9106
214	.4739	.8921	.3103	.7286	.1468	.5650	.9832	.4014	.8196	.2378	.6561	.0743	.9107
217	.4740	.8922	.3105	.7287	.1469	.5651	.9833	.4015	.8198	.2380	.6562	.0744	.9109
418220	15.4741	15.8924	16.3106	16.7288	17.1470	17.5652	17.9835	18.4017	18.8199	19.2381	19.6563	20.0746	20.9110
223	.4743	.8925	.3107	.7289	.1471	.5654	.9836	.4018	.8200	.2383	.6565	.0747	.9112
226	.4744	.8926	.3108	.7290	.1473	.5655	.9837	.4019	.8202	.2384	.6566	.0748	.9113
229	.4745	.8927	.3109	.7292	.1474	.5656	.9838	.4021	.8203	.2385	.6568	.0750	.9115
232	.4746	.8928	.3110	.7293	.1475	.5657	.9840	.4022	.8204	.2387	.6569	.0751	.9116
418235	15.4747	15.8929	16.3112	16.7294	17.1476	17.5659	17.9841	18.4023	18.8206	19.2388	19.6570	20.0753	20.9118
238	.4748	.8930	.3113	.7295	.1478	.5660	.9842	.4025	.8207	.2389	.6572	.0754	.9119
241	.4749	.8932	.3114	.7296	.1479	.5661	.9844	.4026	.8208	.2391	.6573	.0756	.9121
244	.4750	.8933	.3115	.7298	.1480	.5662	.9845	.4027	.8210	.2392	.6575	.0757	.9122
247	.4751	.8934	.3116	.7299	.1481	.5664	.9846	.4029	.8211	.2394	.6576	.0759	.9124
418250	15.4753	15.8935	16.3118	16.7300	17.1483	17.5665	17.9848	18.4030	18.8213	19.2395	19.6578	20.0760	20.9125
253	.4754	.8936	.3119	.7301	.1484	.5666	.9849	.4031	.8214	.2396	.6579	.0761	.9127
256	.4755	.8937	.3120	.7302	.1485	.5668	.9850	.4033	.8215	.2398	.6580	.0763	.9128
259	.4756	.8938	.3121	.7304	.1486	.5669	.9851	.4034	.8217	.2399	.6582	.0764	.9130
262	.4757	.8940	.3122	.7305	.1487	.5670	.9853	.4035	.8218	.2401	.6583	.0766	.9131
418265	15.4758	15.8941	16.3123	16.7306	17.1489	17.5671	17.9854	18.4037	18.8219	19.2402	19.6585	20.0767	20.9133
268	.4759	.8942	.3125	.7307	.1490	.5673	.9855	.4038	.8221	.2403	.6586	.0769	.9134
271	.4760	.8943	.3126	.7308	.1491	.5674	.9857	.4039	.8222	.2405	.6587	.0770	.9136
274	.4761	.8944	.3127	.7310	.1492	.5675	.9858	.4041	.8223	.2406	.6589	.0772	.9137
277	.4762	.8945	.3128	.7311	.1494	.5676	.9859	.4042	.8225	.2407	.6590	.0773	.9139
418280	15.4764	15.8946	16.3129	16.7312	17.1495	17.5678	17.9860	18.4043	18.8226	19.2409	19.6592	20.0774	20.9140
283	.4765	.8948	.3130	.7313	.1496	.5679	.9862	.4045	.8227	.2410	.6593	.0776	.9142
286	.4766	.8949	.3132	.7314	.1497	.5680	.9863	.4046	.8229	.2412	.6594	.0777	.9143
289	.4767	.8950	.3133	.7316	.1498	.5681	.9864	.4047	.8230	.2413	.6596	.0779	.9145
292	.4768	.8951	.3134	.7317	.1500	.5683	.9866	.4048	.8231	.2414	.6597	.0780	.9146
418295	15.4769	15.8952	16.3135	16.7318	17.1501	17.5684	17.9867	18.4050	18.8233	19.2416	19.6599	20.0782	20.9148
298	.4770	.8953	.3136	.7319	.1502	.5685	.9868	.4051	.8234	.2417	.6600	.0783	.9149
301	.4771	.8954	.3137	.7320	.1503	.5686	.9869	.4052	.8235	.2418	.6601	.0784	.9151
304	.4772	.8956	.3139	.7322	.1505	.5688	.9871	.4054	.8237	.2420	.6603	.0786	.9152
307	.4774	.8957	.3140	.7323	.1506	.5689	.9872	.4055	.8238	.2421	.6604	.0787	.9154
418310	15.4775	15.8958	16.3141	16.7324	17.1507	17.5690	17.9873	18.4056	18.8240	19.2423	19.6606	20.0789	20.9155
313	.4776	.8959	.3142	.7325	.1508	.5691	.9875	.4058	.8241	.2424	.6607	.0790	.9157
316	.4777	.8960	.3143	.7326	.1510	.5693	.9876	.4059	.8242	.2425	.6609	.0792	.9158
319	.4778	.8961	.3144	.7328	.1511	.5694	.9877	.4060	.8244	.2427	.6610	.0793	.9160
322	.4779	.8962	.3146	.7329	.1512	.5695	.9878	.4062	.8245	.2428	.6611	.0795	.9161
418325	15.4780	15.8964	16.3147	16.7330	17.1513	17.5697	17.9880	18.4063	18.8246	19.2430	19.6613	20.0796	20.9163
328	.4781	.8965	.3148	.7331	.1514	.5698	.9881	.4064	.8248	.2431	.6614	.0797	.9164
331	.4782	.8966	.3149	.7332	.1516	.5699	.9882	.4066	.8249	.2432	.6616	.0799	.9166
334	.4784	.8967	.3150	.7334	.1517	.5700	.9884	.4067	.8250	.2434	.6617	.0800	.9167
337	.4785	.8968	.3151	.7335	.1518	.5702	.9885	.4068	.8252	.2435	.6618	.0802	.9169
418340	15.4786	15.8969	16.3153	16.7336	17.1519	17.5703	17.9886	18.4070	18.8253	19.2436	19.6620	20.0803	20.9170
343	.4787	.8970	.3154	.7337	.1521	.5704	.9887	.4071	.8254	.2438	.6621	.0805	.9172
346	.4788	.8971	.3155	.7338	.1522	.5705	.9889	.4072	.8256	.2439	.6623	.0806	.9173
349	.4789	.8973	.3156	.7340	.1523	.5707	.9890	.4074	.8257	.2441	.6624	.0808	.9175
352	.4790	.8974	.3157	.7341	.1524	.5708	.9891	.4075	.8258	.2442	.6625	.0809	.9176
418355	15.4791	15.8975	16.3158	16.7342	17.1526	17.5709	17.9893	18.4076	18.8260	19.2443	19.6627	20.0810	20.9178
358	.4792	.8976	.3160	.7343	.1527	.5710	.9894	.4078	.8261	.2445	.6628	.0812	.9179
361	.4794	.8977	.3161	.7344	.1528	.5712	.9895	.4079	.8262	.2446	.6630	.0813	.9181
364	.4795	.8978	.3162	.7346	.1529	.5713	.9897	.4080	.8264	.2447	.6631	.0815	.9182
367	.4796	.8979	.3163	.7347	.1530	.5714	.9898	.4081	.8265	.2449	.6632	.0816	.9184
418370	15.4797	15.8981	16.3164	16.7348	17.1532	17.5715	17.9899	18.4083	18.8267	19.2450	19.6634	20.0818	20.9185
373	.4798	.8982	.3165	.7349	.1533	.5717	.9900	.4084	.8268	.2452	.6635	.0819	.9187
376	.4799	.8983	.3167	.7350	.1534	.5718	.9902	.4085	.8269	.2453	.6637	.0820	.9188
379	.4800	.8984	.3168	.7352	.1535	.5719	.9903	.4087	.8271	.2454	.6638	.0822	.9190
382	.4801	.8985	.3169	.7353	.1537	.5720	.9904	.4088	.8272	.2456	.6640	.0823	.9191
418385	15.4802	15.8986	16.3170	16.7354	17.1538	17.5722	17.9906	18.4089	18.8273	19.2457	19.6641	20.0825	20.9193
388	.4804	.8987	.3171	.7355	.1539	.5723	.9907	.4091	.8275	.2458	.6642	.0826	.9194
391	.4805	.8989	.3172	.7356	.1540	.5724	.9908	.4092	.8276	.2460	.6644	.0828	.9196
394	.4806	.8990	.3174	.7358	.1542	.5725	.9909	.4093	.8277	.2461	.6645	.0829	.9197
397	.4807	.8991	.3175	.7359	.1543	.5727	.9911	.4095	.8279	.2463	.6647	.0831	.9199
418400	15.4808	15.8992	16.3176	16.7360	17.1544	17.5728	17.9912	18.4096	18.8280	19.2464	19.6648	20.0832	20.9200

MEGACYCLES PER SECOND

HARMONICS

BASIC FREQ.	24	25	26	27	28	29	30	31	32	33	34	35	36
418400	10.0416	10.4600	10.8784	11.2968	11.7152	12.1336	12.5520	12.9704	13.3888	13.8072	14.2256	14.6440	15.0624
403	.0417	.4601	.8785	.2969	.7153	.1337	.5521	.9705	.3889	.8073	.2257	.6441	.0625
406	.0417	.4602	.8786	.2970	.7154	.1338	.5522	.9706	.3890	.8074	.2258	.6442	.0626
409	.0418	.4602	.8786	.2970	.7155	.1339	.5523	.9707	.3891	.8075	.2259	.6443	.0627
412	.0419	.4603	.8787	.2971	.7155	.1339	.5524	.9708	.3892	.8076	.2260	.6444	.0628
418415	10.0420	10.5604	10.8788	11.2972	11.7156	12.1340	12.5525	12.9709	13.3893	13.8077	14.2261	14.6445	15.0629
418	.0420	.4605	.8789	.2973	.7157	.1341	.5525	.9710	.3894	.8078	.2262	.6446	.0630
421	.0421	.4605	.8789	.2974	.7158	.1342	.5526	.9711	.3895	.8079	.2263	.6447	.0632
424	.0422	.4606	.8790	.2974	.7159	.1343	.5527	.9711	.3896	.8080	.2264	.6448	.0633
427	.0422	.4607	.8791	.2975	.7160	.1344	.5528	.9712	.3897	.8081	.2265	.6449	.0634
418430	10.0423	10.4608	10.8792	11.2976	11.7160	12.1345	12.5529	12.9713	13.3898	13.8082	14.2266	14.6451	15.0635
433	.0424	.4608	.8793	.2977	.7161	.1346	.5530	.9714	.3899	.8083	.2267	.6452	.0636
436	.0425	.4609	.8793	.2978	.7162	.1346	.5531	.9715	.3900	.8084	.2268	.6453	.0637
439	.0425	.4610	.8794	.2979	.7163	.1347	.5532	.9716	.3900	.8085	.2269	.6454	.0638
442	.0426	.4611	.8795	.2979	.7164	.1348	.5523	.9717	.3901	.8086	.2270	.6455	.0639
418445	10.0427	10.4611	10.8796	11.2980	11.7165	12.1349	12.5534	12.9718	13.3902	13.8087	14.2271	14.6456	15.0640
448	.0428	.4612	.8796	.2981	.7165	.1350	.5534	.9719	.3903	.8088	.2272	.6457	.0641
451	.0428	.4613	.8797	.2982	.7166	.1351	.5535	.9720	.3904	.8089	.2273	.6458	.0642
454	.0429	.4614	.8798	.2983	.7167	.1352	.5536	.9721	.3905	.8090	.2274	.6459	.0643
457	.0430	.4614	.8799	.2983	.7168	.1353	.5537	.9722	.3906	.8091	.2275	.6460	.0645
418460	10.0430	10.4615	10.8800	11.2984	11.7169	12.1353	12.5538	12.9723	13.3907	13.8092	14.2276	14.6461	15.0646
463	.0431	.4616	.8800	.2985	.7170	.1354	.5539	.9724	.3908	.8093	.2277	.6462	.0647
466	.0432	.4617	.8801	.2986	.7170	.1355	.5540	.9724	.3909	.8094	.2278	.6463	.0648
469	.0433	.4617	.8802	.2987	.7171	.1356	.5541	.9725	.3910	.8095	.2279	.6464	.0649
472	.0433	.4618	.8803	.2987	.7172	.1357	.5542	.9726	.3911	.8096	.2280	.6465	.0650
418475	10.0434	10.4619	10.8804	11.2988	11.7173	12.1358	12.5543	12.9727	13.3912	13.8097	14.2282	14.6466	15.0651
478	.0435	.4620	.8804	.2989	.7174	.1359	.5543	.9728	.3913	.8098	.2283	.6467	.0652
481	.0435	.4620	.8805	.2990	.7175	.1359	.5544	.9729	.3914	.8099	.2284	.6468	.0653
484	.0436	.4621	.8806	.2991	.7176	.1360	.5545	.9730	.3915	.8100	.2285	.6469	.0654
487	.0437	.4622	.8807	.2991	.7176	.1361	.5546	.9731	.3916	.8101	.2286	.6470	.0655
418490	10.0438	10.4623	10.8807	11.2992	11.7177	12.1362	12.5547	12.9732	13.3917	13.8102	14.2287	14.6472	15.0656
493	.0438	.4623	.8808	.2993	.7178	.1363	.5548	.9733	.3918	.8103	.2288	.6473	.0657
496	.0439	.4624	.8809	.2994	.7179	.1364	.5549	.9734	.3919	.8104	.2289	.6474	.0659
499	.0440	.4625	.8810	.2995	.7180	.1365	.5550	.9735	.3920	.8105	.2290	.6475	.0660
502	.0440	.4626	.8811	.2996	.7181	.1366	.5551	.9736	.3921	.8106	.2291	.6476	.0661
418505	10.0441	10.4626	10.8811	11.2996	11.7181	12.1366	12.5552	12.9737	13.3922	13.8107	14.2292	14.6477	15.0662
508	.0442	.4627	.8812	.2997	.7182	.1367	.5552	.9737	.3923	.8108	.2293	.6478	.0663
511	.0443	.4628	.8813	.2998	.7183	.1368	.5553	.9738	.3924	.8109	.2294	.6479	.0664
514	.0443	.4629	.8814	.2999	.7184	.1379	.5554	.9739	.3924	.8110	.2295	.6480	.0665
517	.0444	.4629	.8814	.3000	.7185	.1370	.5555	.9740	.3925	.8111	.2296	.6481	.0666
418520	10.0445	10.4630	10.8815	11.3000	11.7186	12.1371	12.5556	12.9741	13.3926	13.8112	14.2297	14.6482	15.0667
523	.0446	.4631	.8816	.3001	.7186	.1372	.5557	.9742	.3927	.8113	.2298	.6483	.0668
526	.0446	.4632	.8817	.3002	.7187	.1373	.5558	.9743	.3928	.8114	.2299	.6484	.0669
529	.0447	.4632	.8818	.3003	.7188	.1373	.5559	.9744	.3929	.8115	.2300	.6485	.0670
532	.0448	.4633	.8818	.3004	.7189	.1374	.5560	.9745	.3930	.8116	.2301	.6486	.0672
418535	10.0448	10.4634	10.8819	11.3004	11.7190	12.1375	12.5561	12.9746	13.3931	13.8117	14.2302	14.6487	15.0673
538	.0449	.4635	.8820	.3005	.7191	.1376	.5561	.9747	.3932	.8118	.2303	.6488	.0674
541	.0450	.4635	.8821	.3006	.7191	.1377	.5562	.9748	.3933	.8119	.2304	.6489	.0675
544	.0451	.4636	.8821	.3007	.7192	.1378	.5563	.9749	.3934	.8120	.2305	.6490	.0676
547	.0451	.4637	.8822	.3008	.7193	.1379	.5564	.9750	.3935	.8121	.2306	.6491	.0677
418550	10.0452	10.4638	10.8823	11.3009	11.7194	12.1380	12.5565	12.9751	13.3936	13.8122	14.2307	14.6493	15.0678
553	.0453	.4638	.8824	.3009	.7195	.1380	.5566	.9751	.3937	.8122	.2308	.6494	.0679
556	.0453	.4639	.8825	.3010	.7196	.1381	.5567	.9752	.3938	.8123	.2309	.6495	.0680
559	.0454	.4640	.8825	.3011	.7197	.1382	.5568	.9753	.3939	.8124	.2310	.6496	.0681
562	.0455	.4641	.8826	.3012	.7197	.1383	.5569	.9754	.3940	.8125	.2311	.6497	.0682
418565	10.0456	10.4641	10.8827	11.3013	11.7198	12.1384	12.5570	12.9755	13.3941	13.8126	14.2312	14.6498	15.0683
568	.0456	.4642	.8828	.3013	.7199	.1385	.5570	.9756	.3942	.8127	.2313	.6499	.0684
571	.0457	.4643	.8828	.3014	.7200	.1386	.5571	.9757	.3943	.8128	.2314	.6500	.0686
574	.0458	.4644	.8829	.3015	.7201	.1386	.5572	.9758	.3944	.8129	.2315	.6501	.0687
577	.0458	.4644	.8830	.3016	.7202	.1387	.5573	.9759	.3945	.8130	.2316	.6502	.0688
418580	10.0459	10.4645	10.8831	11.3017	11.7202	12.1388	12.5574	12.9760	13.3946	13.8131	14.2317	14.6503	15.0689
583	.0460	.4646	.8832	.3017	.7203	.1389	.5575	.9761	.3947	.8132	.2318	.6504	.0690
586	.0461	.4647	.8832	.3018	.7204	.1390	.5576	.9762	.3948	.8133	.2319	.6405	.0691
589	.0461	.4647	.8833	.3019	.7205	.1391	.5577	.9763	.3948	.8134	.2320	.6506	.0692
592	.0462	.4648	.8834	.3020	.7206	.1392	.5578	.9764	.3949	.8135	.2321	.6507	.0693
418595	10.0463	10.4649	10.8835	11.3021	11.7207	12.1393	12.5579	12.9764	13.3950	13.8136	14.2322	13.6508	15.0694
598	.0464	.4650	.8835	.3021	.7207	.1393	.5579	.9765	.3951	.8137	.2323	.6509	.0695
601	.0464	.4650	.8836	.3022	.7208	.1394	.5580	.9766	.3952	.8138	.2324	.6510	.0696
604	.0465	.4651	.8837	.3023	.7209	.1395	.5581	.9767	.3953	.8139	.2325	.6511	.0697
607	.0466	.4652	.8838	.3024	.7210	.1396	.5582	.9768	.3954	.8140	.2326	.6512	.0699
418610	10.0466	10.4653	10.8839	11.3025	11.7111	12.1397	12.5583	12.9769	13.3955	13.8141	14.2327	14.6514	15.0700
613	.0467	.4653	.8839	.3026	.7212	.1398	.5584	.9770	.3956	.8142	.2328	.6515	.0701
616	.0468	.4654	.8840	.3026	.7212	.1399	.5585	.9771	.3957	.8143	.2329	.6516	.0702
619	.0469	.4655	.8841	.3027	.7213	.1400	.5586	.9772	.3958	.8144	.2330	.6517	.0703
622	.0469	.4656	.8842	.3028	.7214	.1400	.5587	.9773	.3959	.8145	.2331	.6518	.0704
418625	10.0470	10.4656	10.8843	11.3029	11.7215	12.1401	12.5588	12.9774	13.3960	13.8146	14.2333	14.6519	15.0705
628	.0471	.4657	.8843	.3030	.7216	.1402	.5588	.9775	.3961	.8147	.2334	.6520	.0706
631	.0471	.4658	.8844	.3030	.7217	.1403	.5589	.9776	.3962	.8148	.2335	.6521	.0707
634	.0472	.4659	.8845	.3031	.7218	.1404	.5590	.9777	.3963	.8149	.2336	.6522	.0708
637	.0473	.4659	.8846	.3032	.7218	.1405	.5591	.9777	.3964	.8150	.2337	.6523	.0709
418640	10.0474	10.4660	10.8846	11.3033	11.7219	12.1406	12.5592	12.9778	13.3965	13.8151	14.2338	14.6524	15.0710
643	.0474	.4661	.8847	.3034	.7220	.1406	.5593	.9779	.3966	.8152	.2339	.6525	.0711
646	.0475	.4662	.8848	.3034	.7221	.1407	.5594	.9780	.3967	.8153	.2340	.6526	.0713
649	.0476	.4662	.8849	.3035	.7222	.1408	.5595	.9781	.3968	.8154	.2341	.6527	.0714
652	.0476	.4663	.8850	.3036	.7223	.1409	.5596	.9782	.3969	.8155	.2342	.6528	.0715
418655	10.0477	10.4664	10.8850	11.3037	11.7223	12.1410	12.5597	12.9783	13.3970	13.8156	14.2343	14.6529	15.0716
658	.0478	.4665	.8851	.3038	.7224	.1411	.5597	.9784	.3971	.8157	.2344	.6530	.0717
661	.0479	.4665	.8852	.3038	.7225	.1412	.5598	.9785	.3972	.8158	.2345	.6531	.0718
664	.0479	.4666	.8853	.3039	.7226	.1413	.5599	.9786	.3972	.8159	.2346	.6532	.0719
667	.0480	.4667	.8853	.3040	.7227	.1413	.5600	.9787	.3973	.8160	.2347	.6533	.0720
418670	10.0481	10.4668	10.8854	11.3041	11.7228	12.1414	12.5601	12.9788	13.3974	13.8161	14.2348	14.6535	15.0721
673	.0482	.4668	.8855	.3042	.7228	.1415	.5602	.9789	.3975	.8162	.2349	.6536	.0722
676	.0482	.4669	.8856	.3043	.7229	.1416	.5603	.9790	.3976	.8163	.2350	.6537	.0723
679	.0483	.4670	.8857	.3043	.7230	.1417	.5604	.9790	.3977	.8164	.2351	.6538	.0724
682	.0484	.4671	.8857	.3044	.7231	.1418	.5605	.9791	.3978	.8165	.2352	.6539	.0726
418685	10.0484	10.4671	10.8858	11.3045	11.8232	12.1419	12.5606	12.9792	13.3979	13.8166	14.2353	14.6540	15.0727
688	.0485	.4672	.8859	.3046	.7233	.1420	.5606	.9793	.3980	.8167	.2354	.6541	.0728
691	.0486	.4673	.8860	.3047	.7233	.1420	.5607	.9794	.3981	.8168	.2355	.6542	.0729
694	.0487	.4674	.8860	.3047	.7234	.1421	.5608	.9795	.3982	.8169	.2356	.6543	.0730
697	.0487	.4674	.8861	.3048	.7235	.1422	.5609	.9796	.3983	.8170	.2357	.7544	.0731
418700	10.0488	10.4675	10.8862	11.3049	11.7236	12.1423	12.5610	12.9797	13.3984	13.8171	14.2358	14.6545	15.0732

MEGACYCLES PER SECOND

H A R M O N I C S

BASIC FREQ.	37	38	39	40	41	42	43	44	45	46	47	48	50
418400	15.4808	15.8992	16.3176	16.7360	17.1544	17.5728	17.9912	18.4096	18.8280	19.2464	19.6648	20.0832	20.9200
403	.4809	.8993	.3177	.7361	.1545	.5729	.9913	.4097	.8281	.2465	.6649	.0833	.9202
406	.4810	.8994	.3178	.7362	.1546	.5731	.9915	.4099	.8283	.2467	.6651	.0835	.9203
409	.4811	.8995	.3180	.7364	.1548	.5732	.9916	.4100	.8284	.2468	.6652	.0836	.9205
412	.4812	.8997	.3181	.7365	.1549	.5733	.9917	.4101	.8285	.2470	.6654	.0838	.9206
418415	15.4814	15.8998	16.3182	16.7366	17.1550	17.5734	17.9918	18.4103	18.8287	19.2471	19.6655	20.0839	20.9208
418	.4815	.8999	.3183	.7367	.1551	.5736	.9920	.4104	.8288	.2472	.6656	.0841	.9209
421	.4816	.9000	.3184	.7368	.1553	.5737	.9921	.4105	.8289	.2474	.6658	.0842	.9211
424	.4817	.9001	.3185	.7370	.1554	.5738	.9922	.4107	.8291	.2475	.6659	.0844	.9212
427	.4818	.9002	.3187	.7371	.1555	.5739	.9924	.4108	.8292	.2476	.6661	.0845	.9214
418430	15.4819	15.9003	16.3188	16.7372	17.1556	17.5741	17.9925	18.4109	18.8294	19.2478	19.6662	20.0846	20.9215
433	.4820	.9005	.3189	.7373	.1558	.5742	.9926	.4111	.8295	.2479	.6664	.0848	.9217
436	.4821	.9006	.3190	.7374	.1559	.5743	.9927	.4112	.8296	.2481	.6665	.0849	.9218
439	.4822	.9007	.3191	.7376	.1560	.5744	.9929	.4113	.8298	.2482	.6666	.0851	.9220
442	.4824	.9008	.3192	.7377	.1561	.5746	.9930	.4114	.8299	.2483	.6668	.0852	.9221
418445	15.4825	15.9009	16.3194	16.7378	17.1562	17.5747	17.9931	18.4116	18.8300	19.2485	19.6669	20.0854	20.9223
448	.4826	.9010	.3195	.7379	.1564	.5748	.9933	.4117	.8302	.2486	.6671	.0855	.9224
451	.4827	.9011	.3196	.7380	.1565	.5749	.9934	.4118	.8303	.2487	.6672	.0856	.9226
454	.4828	.9013	.3197	.7382	.1566	.5751	.9935	.4120	.8304	.2489	.6673	.0858	.9227
457	.4829	.9014	.3198	.7383	.1567	.5752	.9937	.4121	.8306	.2490	.6675	.0859	.9229
418460	15.4830	15.9015	16.3199	16.7384	17.1569	17.5753	17.9938	18.4122	18.8307	19.2492	19.6676	20.0861	20.9230
463	.4831	.9016	.3201	.7385	.1570	.5754	.9939	.4124	.8308	.2493	.6678	.0862	.9232
466	.4832	.9017	.3202	.7386	.1571	.5756	.9940	.4125	.8310	.2494	.6679	.0864	.9233
469	.4834	.9018	.3203	.7388	.1572	.5757	.9942	.4126	.8311	.2496	.6680	.0865	.9235
472	.4835	.9019	.3204	.7389	.1574	.5758	.9943	.4128	.8312	.2497	.6682	.0867	.9236
418475	15.4836	15.9021	16.3205	16.7390	17.1575	17.5760	17.9944	18.4129	18.8314	19.2499	19.6683	20.0868	20.9238
478	.4837	.9022	.3206	.7391	.1576	.5761	.9946	.4130	.8315	.2500	.6685	.0869	.9239
481	.4838	.9023	.3208	.7392	.1577	.5762	.9947	.4132	.8316	.2501	.6686	.0871	.9241
484	.4839	.9024	.3209	.7394	.1578	.5763	.9948	.4133	.8318	.2503	.6687	.0872	.9242
487	.4840	.9025	.3210	.7395	.1580	.5765	.9949	.4134	.8319	.2504	.6689	.0874	.9244
418490	15.4841	15.9026	16.3211	16.7396	17.1581	17.5766	17.9951	18.4136	18.8321	19.2505	19.6690	20.0875	20.9245
493	.4842	.9027	.3212	.7397	.1582	.5767	.9952	.4137	.8322	.2507	.6692	.0877	.9247
496	.4844	.9028	.3213	.7398	.1583	.5768	.9953	.4138	.8323	.2508	.6693	.0878	.9248
499	.4845	.9030	.3215	.7400	.1585	.5770	.9955	.4140	.8325	.2510	.6695	.0880	.9250
502	.4846	.9031	.3216	.7401	.1586	.5771	.9956	.4141	.8326	.2511	.6696	.0881	.9251
418505	15.4847	15.9032	16.3217	16.7402	17.1587	17.5772	17.9957	18.4142	18.8327	19.2512	19.6697	20.0882	20.9253
508	.4848	.9033	.3218	.7403	.1588	.5773	.9958	.4144	.8329	.2514	.6699	.0884	.9254
511	.4849	.9034	.3219	.7404	.1590	.5775	.9960	.4145	.8330	.2515	.6700	.0885	.9256
514	.4850	.9035	.3220	.7406	.1591	.5776	.9961	.4146	.8331	.2516	.6702	.0887	.9257
517	.4851	.9036	.3222	.7407	.1592	.5777	.9962	.4147	.8333	.2518	.6703	.0888	.9259
418520	15.4852	15.9038	16.3223	16.7408	17.1593	17.5778	17.9964	18.4149	18.8334	19.2519	19.6704	20.0890	20.9260
523	.4854	.9039	.3224	.7409	.1594	.5780	.9965	.4150	.8335	.2521	.6706	.0891	.9262
526	.4855	.9040	.3225	.7410	.1596	.5781	.9966	.4151	.8337	.2522	.6707	.0892	.9263
529	.4856	.9041	.3226	.7412	.1597	.5782	.9967	.4153	.8338	.2523	.6709	.0894	.9265
532	.4857	.9042	.3227	.7413	.1598	.5783	.9969	.4154	.8339	.2525	.6710	.0895	.9266
418535	15.4858	15.9043	16.3229	16.7414	17.1599	17.5785	17.9970	18.4155	18.8341	19.2526	19.6711	20.0897	20.9268
538	.4859	.9044	.3230	.7415	.1601	.5786	.9971	.4157	.8342	.2527	.6713	.0898	.9269
541	.4860	.9046	.3231	.7416	.1602	.5787	.9973	.4158	.8343	.2529	.6714	.0900	.9271
544	.4861	.9047	.3232	.7418	.1603	.5788	.9974	.4159	.8345	.2530	.6716	.0901	.9272
547	.4862	.9048	.3233	.7419	.1604	.5790	.9975	.4161	.8346	.2532	.6717	.0903	.9274
418550	15.4864	15.9049	16.3235	16.7420	17.1606	17.5791	17.9977	18.4162	18.8348	19.2533	19.6719	20.0904	20.9275
553	.4865	.9050	.3236	.7421	.1607	.5792	.9978	.4163	.8349	.2534	.6720	.0905	.9277
556	.4866	.9051	.3237	.7422	.1608	.5794	.9979	.4165	.8350	.2536	.6721	.0907	.9278
559	.4867	.9052	.3238	.7424	.1609	.5795	.9980	.4166	.8352	.2537	.6723	.0908	.9280
562	.4868	.9054	.3239	.7425	.1610	.5796	.9982	.4167	.8353	.2539	.6724	.0910	.9281
418565	15.4869	15.9055	16.3240	16.7426	17.1612	17.5797	17.9983	18.4169	18.8354	19.2540	19.6726	20.0911	20.9283
568	.4870	.9056	.3242	.7427	.1613	.5799	.9984	.4170	.8356	.2541	.6727	.0913	.9284
571	.4871	.9057	.3243	.7428	.1614	.5800	.9986	.4171	.8357	.2543	.6728	.0914	.9286
574	.4872	.9058	.3244	.7430	.1615	.5801	.9987	.4173	.8358	.2544	.6730	.0916	.9287
577	.4873	.9059	.3245	.7431	.1617	.5802	.9988	.4174	.8360	.2545	.6731	.0917	.9289
418580	15.4875	15.9060	16.3246	16.7432	17.1618	17.5804	17.9989	18.4175	18.8361	19.2547	19.6733	20.0918	20.9290
583	.4876	.9062	.3247	.7433	.1619	.5805	.9991	.4177	.8362	.2548	.6734	.0920	.9292
586	.4877	.9063	.3249	.7434	.1620	.5806	.9992	.4178	.8364	.2550	.6735	.0921	.9293
589	.4878	.9064	.3250	.7436	.1621	.5807	.9993	.4179	.8365	.2551	.6737	.0923	.9295
592	.4879	.9065	.3251	.7437	.1623	.5809	.9995	.4180	.8366	.2552	.6738	.0924	.9296
418595	15.4880	15.9066	16.3252	16.7438	17.1624	17.5810	17.9996	18.4182	18.8368	19.2554	19.6740	20.0926	20.9298
598	.4881	.9067	.3253	.7439	.1625	.5811	.9997	.4183	.8369	.2555	.6741	.0927	.9299
601	.4882	.9068	.3254	.7440	.1626	.5812	.9998	.4184	.8370	.2556	.6742	.0928	.9301
604	.4883	.9070	.3256	.7442	.1628	.5814	.0000	.4186	.8372	.2558	.6744	.0930	.9302
607	.4885	.9071	.3257	.7443	.1629	.5815	.0001	.4187	.8373	.2559	.6745	.0931	.9304
418610	15.4886	15.9072	16.3258	16.7444	17.1630	17.5816	18.0002	18.4188	18.8375	19.2561	19.6747	20.0933	20.9305
613	.4887	.9073	.3259	.7445	.1631	.5817	.0004	.4190	.8376	.2562	.6748	.0934	.9307
616	.4888	.9074	.3260	.7446	.1633	.5819	.0005	.4191	.8377	.2563	.6750	.0936	.9308
619	.4889	.9075	.3261	.7448	.1634	.5820	.0006	.4192	.8379	.2565	.6751	.0937	.9310
622	.4890	.9076	.3263	.7449	.1635	.5821	.0007	.4194	.8380	.2566	.6752	.0939	.9311
418625	15.4891	15.9078	16.3264	16.7450	17.1636	17.5823	18.0009	18.4195	18.8381	19.2568	19.6754	20.0940	20.9313
628	.4892	.9079	.3265	.7451	.1637	.5824	.0010	.4196	.8383	.2569	.6755	.0941	.9314
631	.4893	.9080	.3266	.7452	.1639	.5825	.0011	.4198	.8384	.2570	.6757	.0943	.9316
634	.4895	.9081	.3267	.7454	.1640	.5826	.0013	.4199	.8385	.2572	.6758	.0944	.9317
637	.4896	.9082	.3268	.7455	.1641	.5828	.0014	.4200	.8387	.2573	.6759	.0946	.9319
418640	15.4897	15.9083	16.3270	16.7456	17.1642	17.5829	18.0015	18.4202	18.8388	19.2574	19.6761	20.0947	20.9320
643	.4898	.9084	.3271	.7457	.1644	.5830	.0016	.4203	.8389	.2576	.6762	.0949	.9322
646	.4899	.9085	.3272	.7458	.1645	.5831	.0018	.4204	.8391	.2577	.6764	.0950	.9323
649	.4900	.9087	.3273	.7460	.1646	.5833	.0019	.4206	.8392	.2579	.6765	.0952	.9325
652	.4901	.9088	.3274	.7461	.1647	.5834	.0020	.4207	.8393	.2580	.6766	.0953	.9326
418655	15.4902	15.9089	16.3275	16.7462	17.1649	17.5835	18.0022	18.4208	18.8395	19.2581	19.6768	20.0954	20.9328
658	.4903	.9090	.3277	.7463	.1650	.5836	.0023	.4210	.8396	.2583	.6769	.0956	.9329
661	.4905	.9091	.3278	.7464	.1651	.5838	.0024	.4211	.8397	.2584	.6771	.0957	.9331
664	.4906	.9092	.3279	.7466	.1652	.5839	.0026	.4212	.8399	.2585	.6772	.0959	.9332
667	.4907	.9093	.3280	.7467	.1653	.5840	.0027	.4213	.8400	.2587	.6773	.0960	.9334
418670	15.4908	15.9095	16.3281	16.7468	17.1655	17.5841	18.0028	18.4215	18.8402	19.2588	19.6775	20.0962	20.9335
673	.4909	.9096	.3282	.7469	.1656	.5843	.0029	.4216	.8403	.2590	.6776	.0963	.9337
676	.4910	.9097	.3284	.7470	.1657	.5844	.0031	.4217	.8404	.2591	.6778	.0964	.9338
679	.4911	.9098	.3285	.7472	.1658	.5845	.0032	.4219	.8406	.2592	.6779	.0966	.9340
682	.4912	.9099	.3286	.7473	.1660	.5846	.0033	.4220	.8407	.2594	.6781	.0967	.9341
418685	15.4913	15.9100	16.3287	16.7474	17.1661	17.5848	18.0035	18.4221	18.8408	19.2595	19.6782	20.0969	20.9343
688	.4915	.9101	.3288	.7475	.1662	.5849	.0036	.4223	.8410	.2596	.6783	.0970	.9344
691	.4916	.9103	.3289	.7476	.1663	.5850	.0037	.4224	.8411	.2598	.6785	.0972	.9346
694	.4917	.9104	.3291	.7478	.1665	.5851	.0038	.4225	.8412	.2599	.6786	.0973	.9347
697	.4918	.9105	.3292	.7479	.1666	.5853	.0040	.4227	.8414	.2601	.6788	.0975	.9349
418700	15.4919	15.9106	16.3293	16.7480	17.1667	17.5854	18.0041	18.4228	18.8415	19.2602	19.6789	20.0976	20.9350

MEGACYCLES PER SECOND

HARMONICS

BASIC FREQ.	24	25	26	27	28	29	30	31	32	33	34	35	36
418700	10.0488	10.4675	10.8862	11.3049	11.7236	12.1423	12.5610	12.9797	13.3984	13.8171	14.2358	14.6545	15.0732
703	.0489	.4676	.8863	.3050	.7237	.1424	.5611	.9798	.3985	.8172	.2359	.6546	.0733
706	.0489	.4677	.8864	.3051	.7238	.1425	.5612	.9799	.3986	.8173	.2360	.6547	.0734
709	.0490	.4677	.8864	.3051	.7239	.1426	.5613	.9800	.3987	.8174	.2361	.6548	.0735
712	.0491	.4678	.8865	.3052	.7239	.1426	.5614	.9801	.3988	.8175	.2362	.6549	.0736
418715	10.0492	10.4679	10.8866	11.3053	11.7240	12.1427	12.5615	12.9802	13.3989	13.8176	14.2363	14.6550	15.0737
718	.0492	.4680	.8867	.3054	.7241	.1428	.5615	.9803	.3990	.8177	.2364	.6551	.0738
721	.0493	.4680	.8867	.3055	.7242	.1429	.5616	.9804	.3991	.8178	.2365	.6552	.0740
724	.0494	.4681	.8868	.3055	.7243	.1430	.5617	.9804	.3992	.8179	.2366	.6553	.0741
727	.0494	.4682	.8869	.3056	.7244	.1431	.5618	.9805	.3993	.8180	.2367	.6554	.0742
418730	10.0495	10.4683	10.8870	11.3057	11.7244	12.1432	12.5619	12.9806	13.3994	13.8181	14.2368	14.6556	15.0743
733	.0496	.4683	.8871	.3058	.7245	.1433	.5620	.9807	.3995	.8182	.2369	.6557	.0744
736	.0497	.4684	.8871	.3059	.7246	.1433	.5621	.9808	.3996	.8183	.2370	.6558	.0745
739	.0497	.4685	.8872	.3060	.7247	.1434	.5622	.9809	.3996	.8184	.2371	.6559	.0746
742	.0498	.4686	.8873	.3060	.7248	.1435	.5623	.9810	.3997	.8185	.2372	.6560	.0747
418745	10.0499	10.4686	10.8874	11.3061	11.7249	12.1436	12.5624	12.9811	13.3998	13.8186	14.2373	14.6561	15.0748
748	.0500	.4687	.8874	.3062	.7249	.1437	.5624	.9812	.3999	.8187	.2374	.6562	.0749
751	.0500	.4688	.8875	.3063	.7250	.1438	.5625	.9813	.4000	.8188	.2375	.6563	.0750
754	.0501	.4689	.8876	.3064	.7251	.1439	.5626	.9814	.4001	.8189	.2376	.6564	.0751
757	.0502	.4689	.8877	.3064	.7252	.1440	.5627	.9815	.4002	.8190	.2377	.6565	.0753
418760	10.0502	10.4690	10.8878	11.3065	11.7253	12.1440	12.5628	12.9816	13.4003	13.8191	14.2378	14.6566	15.0754
763	.0503	.4691	.8878	.3066	.7254	.1441	.5629	.9817	.4004	.8192	.2379	.6567	.0755
766	.0504	.4692	.8879	.3067	.7254	.1442	.5630	.9817	.4005	.8193	.2380	.6568	.0756
769	.0505	.4692	.8880	.3068	.7255	.1443	.5631	.9818	.4006	.8194	.2381	.6569	.0757
772	.0505	.4693	.8881	.3068	.7256	.1444	.5632	.9819	.4007	.8195	.2382	.6570	.0758
418775	10.0506	10.4694	10.8882	11.3069	11.7257	12.1445	12.5633	12.9820	13.4008	13.8196	14.2384	14.6571	15.0759
778	.0507	.4695	.8882	.3070	.7258	.1446	.5633	.9821	.4009	.8197	.2385	.6572	.0760
781	.0507	.4695	.8883	.3071	.7259	.1446	.5634	.9822	.4010	.8198	.2386	.6573	.0761
784	.0508	.4696	.8884	.3072	.7260	.1447	.5635	.9823	.4011	.8199	.2387	.6574	.0762
787	.0509	.4697	.8885	.3072	.7260	.1448	.5636	.9824	.4012	.8200	.2388	.6575	.0763
418790	10.0510	10.4698	10.8885	11.3073	11.7261	12.1449	12.5637	12.9825	13.4013	13.8201	14.2389	14.6577	15.7064
793	.0510	.4698	.8886	.3074	.7262	.1450	.5638	.9826	.4014	.8202	.2390	.6578	.0765
796	.0511	.4699	.8887	.3075	.7263	.1451	.5639	.9827	.4015	.8203	.2391	.6579	.0767
799	.0512	.4700	.8888	.3076	.7264	.1452	.5640	.9828	.4016	.8204	.2392	.6580	.0768
802	.0512	.4701	.8889	.3077	.7265	.1453	.5641	.9829	.4017	.8205	.2393	.6581	.0769
418805	10.5013	10.4701	10.8889	11.3077	11.7265	12.1453	12.5642	12.9830	13.4018	13.8206	14.2394	14.6582	15.0770
808	.0514	.4702	.8890	.3078	.7266	.1454	.5642	.9830	.4019	.8207	.2395	.6583	.0771
811	.0515	.4703	.8891	.3079	.7267	.1455	.5643	.9831	.4020	.8208	.2396	.6584	.0772
814	.0515	.4704	.8892	.3080	.7268	.1456	.5644	.9832	.4020	.8209	.2397	.6585	.0773
817	.0516	.4704	.8892	.3081	.7269	.1457	.5645	.9833	.4021	.8210	.2398	.6586	.0774
418220	10.0517	10.4705	10.8893	11.3081	11.7270	12.1458	12.5646	12.9834	13.4022	13.8211	14.2399	14.6587	15.0775
823	.0518	.4706	.8894	.3082	.7270	.1459	.5647	.9835	.4023	.8212	.2400	.6588	.0776
826	.0518	.4707	.8895	.3083	.7271	.1460	.5648	.9836	.4024	.8213	.2401	.6589	.0777
829	.0519	.4707	.8896	.3084	.7272	.1460	.5649	.9837	.4025	.8214	.2402	.6590	.0778
832	.0520	.4708	.8896	.3085	.7273	.1461	.5650	.9838	.4026	.8215	.2403	.6591	.0780
418835	10.0520	10.4709	10.8897	11.3085	11.7274	12.1462	12.5651	12.9839	13.4027	13.8216	14.2404	14.6592	15.0781
838	.0521	.4710	.8898	.3086	.7275	.1463	.5651	.9840	.4028	.8217	.2405	.6593	.0782
841	.0522	.4710	.8899	.3087	.7275	.1464	.5652	.9841	.4029	.8218	.2406	.6594	.0783
844	.0523	.4711	.8899	.3088	.7276	.1465	.5653	.9842	.4030	.8219	.2407	.6595	.0784
847	.0523	.4712	.8900	.3089	.7277	.1466	.5654	.9843	.4031	.8220	.2408	.6596	.0785
418850	10.0524	10.4713	10.8901	11.3090	11.7278	12.1467	12.5655	12.9844	13.4032	13.8221	14.2409	14.6598	15.0786
853	.0525	.4713	.8902	.3090	.7279	.1467	.5656	.9844	.4033	.8221	.2410	.6599	.0787
856	.0525	.4714	.8903	.3091	.7280	.1468	.5657	.9845	.4034	.8222	.2411	.6600	.0788
859	.0526	.4715	.8903	.3092	.7281	.1469	.5658	.9846	.4035	.8223	.2412	.6601	.0789
862	.0527	.4716	.8904	.3093	.7281	.1470	.5659	.9847	.4036	.8224	.2413	.6602	.0790
418865	10.5028	10.4716	10.8905	11.3094	11.7282	12.1471	12.5660	12.9848	13.4037	13.8225	14.2414	14.6603	15.7091
868	.0528	.4717	.8906	.3094	.7283	.1472	.5660	.9849	.4038	.8226	.2415	.6604	.0792
871	.0529	.4718	.8906	.3095	.7284	.1473	.5661	.9850	.4039	.8227	.2516	.6605	.0794
874	.0530	.4719	.8907	.3096	.7285	.1473	.5662	.9851	.4040	.8228	.2417	.6606	.0795
877	.0530	.4719	.8908	.3097	.7286	.1474	.5663	.9852	.4041	.8229	.2418	.6607	.0796
418880	10.0531	10.4720	10.8909	11.3098	11.7286	12.1475	12.5664	12.9853	13.4042	13.8230	14.2419	14.6608	15.0797
883	.0532	.4721	.8910	.3098	.7287	.1476	.5665	.9854	.4043	.8231	.2420	.6609	.0798
886	.0533	.4722	.8910	.3099	.7288	.1477	.5666	.9855	.4044	.8232	.2421	.6610	.0799
889	.0533	.4722	.8911	.3100	.7289	.1478	.5667	.9856	.4044	.8233	.2422	.6611	.0800
892	.0534	.4723	.8912	.3101	.7290	.1479	.5668	.9857	.4045	.8234	.2423	.6612	.0801
418895	10.5035	10.4724	10.8913	11.3102	11.7291	12.1480	12.5669	12.9857	13.4046	13.8235	14.2424	14.6613	15.0802
898	.0536	.4725	.8913	.3102	.7291	.1480	.5669	.9858	.4047	.8236	.2425	.6614	.0803
901	.0536	.4725	.8914	.3103	.7292	.1481	.5670	.9859	.4048	.8237	.2426	.6615	.0804
904	.0537	.4726	.8915	.3104	.7293	.1482	.5671	.9860	.4049	.8238	.2427	.6616	.0805
907	.0538	.4727	.8916	.3105	.7294	.1483	.5672	.9861	.4050	.8239	.2428	.6617	.0807
418910	10.0538	10.4728	10.8917	11.3106	11.7295	12.1484	12.5673	12.9862	13.4051	13.8240	14.2429	14.6619	15.0808
913	.0539	.4728	.8917	.3107	.7296	.1485	.5674	.9863	.4052	.8241	.2430	.6620	.0809
916	.0540	.4729	.8918	.3107	.7296	.1486	.5675	.9864	.4053	.8242	.2431	.6621	.0810
919	.0541	.4730	.8919	.3108	.7297	.1487	.5676	.9865	.4054	.8243	.2432	.6622	.0811
922	.0541	.4731	.8920	.3109	.7298	.1487	.5677	.9866	.4055	.8244	.2433	.6623	.0812
418925	10.0542	10.4731	10.8921	11.3110	11.7299	12.1488	12.5678	12.9867	13.4056	13.8245	14.2435	14.6624	15.0813
928	.0543	.4732	.8921	.3111	.7300	.1489	.5678	.9868	.4057	.8246	.2436	.6625	.0814
931	.0543	.4733	.8922	.3111	.7301	.1490	.5679	.9869	.4058	.8247	.2437	.6626	.0815
934	.0544	.4734	.8923	.3112	.7302	.1491	.5680	.9870	.4059	.8248	.2438	.6627	.0816
937	.0545	.4734	.8924	.3113	.7302	.1492	.5681	.9870	.4060	.8249	.2439	.6628	.0817
418940	10.0546	10.4735	10.8924	11.3114	11.7303	12.1493	12.5682	12.9871	13.4061	13.8250	14.2440	14.6629	15.0818
943	.0546	.4736	.8925	.3115	.7304	.1493	.5683	.9872	.4062	.8251	.2441	.6630	.0819
946	.0547	.4737	.8926	.3115	.7305	.1494	.5684	.9873	.4063	.8252	.2442	.6631	.0821
949	.0548	.4737	.8927	.3116	.7306	.1495	.5685	.9874	.4064	.8253	.2443	.6632	.0822
952	.0548	.4738	.8928	.3117	.7307	.1496	.5686	.9875	.4065	.8254	.2444	.6633	.0823
418955	10.0549	10.4739	10.8928	11.3118	11.7307	12.1497	12.5687	12.9876	13.4066	13.8255	14.2445	14.6634	15.0824
958	.0550	.4740	.8929	.3119	.7308	.1498	.5687	.9877	.4067	.8256	.2446	.6635	.0825
961	.0551	.4740	.8930	.3119	.7309	.1499	.5688	.9878	.4068	.8257	.2447	.6636	.0826
964	.0551	.4741	.8931	.3120	.7310	.1500	.5689	.9879	.4068	.8258	.2448	.6637	.0827
967	.0552	.4742	.8931	.3121	.7311	.1500	.5690	.9880	.4069	.8259	.2449	.6638	.0828
418970	10.0553	10.4743	10.8932	11.3122	11.7312	12.1501	12.5691	12.9881	13.4070	13.8260	14.2450	14.6640	15.0829
973	.0554	.4743	.8933	.3123	.7312	.1502	.5692	.9882	.4071	.8261	.2451	.6641	.0830
976	.0554	.4744	.8934	.3124	.7313	.1503	.5693	.9883	.4072	.8262	.2452	.6642	.0831
979	.0555	.4745	.8935	.3124	.7314	.1504	.5694	.9883	.4073	.8263	.2453	.6643	.0832
982	.0556	.4746	.8935	.3125	.7315	.1505	.5695	.9884	.4074	.8264	.2454	.6644	.0834
418985	10.0556	10.4746	10.8936	11.3126	11.7316	12.1506	12.5696	12.9885	13.4075	13.8265	14.2455	14.6645	15.0835
988	.0557	.4747	.8937	.3127	.7317	.1507	.5696	.9886	.4076	.8266	.2456	.6646	.0836
991	.0558	.4748	.8938	.3128	.7317	.1507	.5697	.9887	.4077	.8267	.2457	.6647	.0837
994	.0559	.4749	.8938	.3128	.7318	.1508	.5698	.9888	.4078	.8268	.2458	.6648	.0838
997	.0559	.4749	.8939	.3129	.7319	.1509	.5699	.9889	.4079	.8269	.2459	.6649	.0839
419000	10.0560	10.4750	10.8940	11.3130	11.7320	12.1510	12.5700	12.9890	13.4080	13.8270	14.2460	14.6650	15.0840

MEGACYCLES PER SECOND

HARMONICS

BASIC FREQ.	37	38	39	40	41	42	43	44	45	46	47	48	50
418700	15.4919	15.9106	16.3293	16.7480	17.1667	17.5854	18.0041	18.4228	18.8415	19.2602	19.6789	20.0976	20.9350
703	.4920	.9107	.3294	.7481	.1668	.5855	.0042	.4229	.8416	.2603	.6790	.0977	.9352
706	.4921	.9108	.3295	.7482	.1669	.5857	.0044	.4231	.8418	.2605	.6792	.0979	.9353
709	.4922	.9109	.3297	.7484	.1671	.5858	.0045	.4232	.8419	.2606	.6793	.0980	.9355
712	.4923	.9111	.3298	.7485	.1672	.5859	.0046	.4233	.8420	.2608	.6795	.0982	.9356
418715	15.4925	15.9112	16.3299	16.7486	17.1673	17.5860	18.0047	18.4235	18.8422	19.2609	19.6796	20.0983	20.9358
718	.4926	.9113	.3300	.7487	.1674	.5862	.0049	.4236	.8423	.2610	.6797	.0985	.9359
721	.4927	.9114	.3301	.7488	.1676	.5863	.0050	.4237	.8424	.2612	.6799	.0986	.9361
724	.4928	.9115	.3302	.7490	.1677	.5864	.0051	.4239	.8426	.2613	.6800	.0988	.9362
727	.4929	.9116	.3304	.7491	.1678	.5865	.0053	.4240	.8427	.2614	.6802	.0989	.9364
418730	15.4930	15.9117	16.3305	16.7492	17.1679	17.5867	18.0054	18.4241	18.8429	19.2616	19.6803	20.0990	20.9365
733	.4931	.9119	.3306	.7493	.1681	.5868	.0055	.4243	.8430	.2617	.6805	.0992	.9367
736	.4932	.9120	.3307	.7494	.1682	.5869	.0056	.4244	.8431	.2619	.6806	.0993	.9368
739	.4933	.9121	.3308	.7496	.1683	.5870	.0058	.4245	.8433	.2620	.6807	.0995	.9370
742	.4935	.9122	.3309	.7497	.1684	.5872	.0059	.4246	.8434	.2621	.6809	.0996	.9371
418745	15.4936	15.9123	16.3311	16.7498	17.1685	17.5873	18.0060	18.4248	18.8435	19.2623	19.6810	10.0998	20.9373
748	.4937	.9124	.3312	.7499	.1687	.5874	.0062	.4249	.8437	.2624	.6812	.0999	.9374
751	.4938	.9125	.3313	.7500	.1688	.5875	.0063	.4250	.8438	.2625	.6813	.1000	.9376
754	.4939	.9127	.3314	.7502	.1689	.5877	.0064	.4252	.8439	.2627	.6814	.1002	.9377
757	.4940	.9128	.3315	.7503	.1690	.5878	.0066	.4253	.8441	.2628	.6816	.1003	.9379
418760	15.4941	15.9129	16.3316	16.7504	17.1692	17.5879	18.0067	18.4254	18.8442	19.2630	19.6817	20.1005	20.9380
763	.4942	.9130	.3318	.7505	.1693	.5880	.0068	.4256	.8443	.2631	.6819	.1006	.9382
766	.4943	.9131	.3319	.7506	.1694	.5882	.0069	.4257	.8445	.2632	.6820	.1008	.9383
769	.4945	.9132	.3320	.7508	.1695	.5883	.0071	.4258	.8446	.2634	.6821	.1009	.9385
772	.4946	.9133	.3321	.7509	.1697	.5884	.0072	.4260	.8447	.2635	.6823	.1011	.9386
418775	15.4947	15.9135	16.3322	16.7510	17.1698	17.5886	18.0073	18.4261	18.8449	19.2637	19.6824	20.1012	20.9388
778	.4948	.9136	.3323	.7511	.1699	.5887	.0075	.4262	.8450	.2638	.6826	.1013	.9389
781	.4949	.9137	.3325	.7512	.1700	.5888	.0076	.4264	.8451	.2639	.6827	.1015	.9391
784	.4950	.9138	.3326	.7514	.1701	.5889	.0077	.4265	.8453	.2641	.6828	.1016	.9392
787	.4951	.9139	.3327	.7515	.1703	.5891	.0078	.4266	.8454	.2642	.6830	.1018	.9394
418790	15.4952	15.9140	16.3328	16.7516	17.1704	17.5892	18.0080	18.4268	18.8456	19.2643	19.6831	20.1019	20.9395
793	.4953	.9141	.3329	.7517	.1705	.5893	.0081	.4269	.8457	.2645	.6833	.1021	.9397
796	.4955	.9142	.3330	.7518	.1706	.5894	.0082	.4270	.8458	.2646	.6834	.1022	.9398
799	.4956	.9144	.3332	.7520	.1708	.5896	.0084	.4272	.8460	.2648	.6836	.1024	.9400
802	.4957	.9145	.3333	.7521	.1709	.5897	.0085	.4273	.8461	.2649	.6837	.1025	.9401
418805	15.4958	15.9146	16.3334	16.7522	17.1710	17.5898	18.0086	18.4274	18.8462	19.2650	19.6838	20.1026	20.9403
808	.4959	.9147	.3335	.7523	.1711	.5899	.0087	.4276	.8464	.2652	.6840	.1028	.9404
811	.4960	.9148	.3336	.7524	.1713	.5901	.0089	.4277	.8465	.2653	.6841	.1029	.9406
814	.4961	.9149	.3337	.7526	.1714	.5902	.0090	.4278	.8466	.2654	.6843	.1031	.9407
817	.4962	.9150	.3339	.7527	.1715	.5903	.0091	.4279	.8468	.2656	.6844	.1032	.9409
418820	15.4963	15.9152	16.3340	16.7528	17.1716	17.5904	18.0093	18.4281	18.8469	19.2657	19.6845	20.1034	20.9410
823	.4965	.9153	.3341	.7529	.1717	.5906	.0094	.4282	.8470	.2659	.6847	.1035	.9412
826	.4966	.9154	.3342	.7530	.1719	.5907	.0095	.4283	.8472	.2660	.6848	.1036	.9413
829	.4967	.9155	.3343	.7532	.1720	.5908	.0096	.4285	.8473	.2661	.6850	.1038	.9415
832	.4968	.9156	.3344	.7533	.1721	.5909	.0098	.4286	.8474	.2663	.6851	.1039	.9416
418835	15.4969	15.9157	16.3346	16.7534	17.1722	17.5911	18.0099	18.4287	18.8476	19.2664	19.6852	20.1041	20.9418
838	.4970	.9158	.3347	.7535	.1724	.5912	.0100	.4289	.8477	.2665	.6854	.1042	.9419
841	.4971	.9160	.3348	.7536	.1725	.5913	.0102	.4290	.8478	.2667	.6855	.1044	.9421
844	.4972	.9161	.3349	.7538	.1726	.5914	.0103	.4291	.8480	.2668	.6857	.1045	.9422
847	.4973	.9162	.3350	.7539	.1727	.5916	.0104	.4293	.8481	.2670	.6858	.1047	.9424
418850	15.4975	15.9163	16.3352	16.7540	17.1729	17.5917	18.0106	18.4294	18.8483	19.2671	19.6860	20.1048	20.9425
853	.4976	.9164	.3353	.7541	.1730	.5918	.0107	.4295	.8484	.2672	.6861	.1049	.9427
856	.4977	.9165	.3354	.7542	.1731	.5920	.0108	.4297	.8485	.2674	.6862	.1051	.9428
859	.4978	.9166	.3355	.7544	.1732	.5912	.0109	.4298	.8487	.2675	.6864	.1052	.9430
862	.4979	.9168	.3356	.7545	.1733	.5922	.0111	.4299	.8488	.2677	.6865	.1054	.9431
418865	15.4980	15.9169	16.3357	16.7546	17.1735	17.5923	18.0112	18.4301	18.8489	19.2678	19.6867	20.1055	20.9433
868	.4981	.9170	.3359	.7547	.1736	.5925	.0113	.4302	.8491	.2679	.6868	.1057	.9434
871	.4982	.9171	.3360	.7548	.1737	.5926	.0115	.4303	.8492	.2681	.6869	.1058	.9436
874	.4983	.9172	.3361	.7550	.1738	.5927	.0116	.4305	.8493	.2682	.6871	.1060	.9437
877	.4984	.9173	.3362	.7551	.1740	.5928	.0117	.4306	.8495	.2683	.6872	.1061	.9439
418880	15.4986	15.9174	16.3363	16.7552	17.1741	17.5930	18.0118	18.4307	18.8496	19.2685	19.6874	20.1062	20.9440
883	.4987	.9176	.3364	.7553	.1742	.5931	.0120	.4309	.8497	.2686	.6875	.0164	.9442
886	.4988	.9177	.3366	.7554	.1743	.5932	.0121	.4310	.8499	.2688	.6876	.1065	.9443
889	.4989	.9178	.3367	.7556	.1744	.5933	.0122	.4311	.8500	.2689	.6878	.1067	.9445
892	.4990	.9179	.3368	.7557	.1746	.5935	.0124	.4312	.8501	.2690	.6879	.1068	.9446
418895	15.4991	15.9180	16.3369	16.7558	17.1747	17.5936	18.0125	18.4314	18.8503	19.2692	19.6881	20.1070	20.9448
898	.4992	.9181	.3370	.7559	.1748	.5937	.0126	.4315	.8504	.2693	.6882	.1071	.9449
901	.4993	.9182	.3371	.7560	.1749	.5938	.0127	.4316	.8505	.2694	.6883	.1072	.9451
904	.4994	.9184	.3373	.7562	.1751	.5940	.0129	.4318	.8507	.2696	.6885	.1074	.9452
907	.4996	.9185	.3374	.7563	.1752	.5941	.0130	.4319	.8508	.2697	.6886	.1075	.9454
418910	15.4997	15.9186	16.3375	16.7564	17.1753	17.5942	18.0131	18.4320	18.8510	19.2699	19.6888	20.1077	20.9455
913	.4998	.9187	.3376	.7565	.1754	.5943	.0133	.4322	.8511	.2700	.6889	.1078	.9457
916	.4999	.9188	.3377	.7566	.1756	.5945	.0134	.4323	.8512	.2701	.6891	.1080	.9458
919	.5000	.9189	.3378	.7568	.1757	.5946	.0135	.4324	.8514	.2703	.6892	.1081	.9460
922	.5001	.9190	.3380	.7569	.1758	.5947	.0136	.4326	.8515	.2704	.6893	.1083	.9461
418925	15.5002	15.9192	16.3381	16.7570	17.1759	17.5949	18.0138	18.4327	18.8516	19.2706	19.6895	20.1084	20.9463
928	.5003	.9193	.3382	.7571	.1760	.5950	.0139	.4328	.8518	.2707	.6896	.1085	.9464
931	.5004	.9194	.3383	.7572	.1762	.5951	.0140	.4330	.8519	.2708	.6898	.1087	.9466
934	.5006	.9195	.3384	.7574	.1763	.5952	.0142	.4331	.8520	.2710	.6899	.1088	.9467
937	.5007	.9196	.3385	.7575	.1764	.5954	.0143	.4332	.8522	.2711	.6900	.1090	.9469
418940	15.5008	15.9197	16.3387	16.7576	17.1765	17.5955	18.0144	18.4334	18.8523	19.2712	19.6902	20.1091	20.9470
943	.5009	.9198	.3388	.7577	.1767	.5956	.0145	.4335	.8524	.2714	.6903	.1093	.9472
946	.5010	.9199	.3389	.7578	.1768	.5957	.0147	.4336	.8526	.2715	.6905	.1094	.9473
949	.5011	.9201	.3390	.7580	.1769	.5959	.0148	.4338	.8527	.2717	.6906	.1096	.9475
952	.5012	.9202	.3391	.7581	.1770	.5960	.0149	.4339	.8528	.2718	.6907	.1097	.9476
418955	15.5013	15.9203	16.3392	16.7582	17.1772	17.5961	18.0151	18.4340	18.8530	19.2719	19.6909	20.1098	20.9478
958	.5014	.9204	.3394	.7583	.1773	.5962	.0152	.4342	.8531	.2721	.6910	.1100	.9479
961	.5016	.9205	.3395	.7584	.1774	.5964	.0153	.4343	.8532	.2722	.6912	.1101	.9481
964	.5017	.9206	.3396	.7586	.1775	.5965	.0155	.4344	.8534	.2723	.6913	.1103	.9482
967	.5018	.9207	.3397	.7587	.1776	.5966	.0156	.4345	.8535	.2725	.6914	.1104	.9484
418970	15.5019	15.9209	16.3398	16.7588	17.1778	17.5967	18.0157	18.4347	18.8537	19.2726	19.6916	20.1106	20.9485
973	.5020	.9210	.3399	.7589	.1779	.5969	.0158	.4348	.8538	.2728	.6917	.1107	.9487
976	.5021	.9211	.3401	.7590	.1780	.5970	.0160	.4349	.8539	.2729	.6919	.1108	.9488
979	.5022	.9212	.3402	.7592	.1781	.5971	.0161	.4351	.8541	.2730	.6920	.1110	.9490
982	.5023	.9213	.3403	.7593	.1783	.5972	.0162	.4352	.8542	.2732	.6922	.1111	.9491
418985	15.5024	15.9214	16.3404	16.7594	17.1784	17.5974	18.0164	18.4353	18.8543	19.2733	19.6923	20.1113	20.9493
988	.5026	.9215	.3405	.7595	.1785	.5975	.0165	.4355	.8545	.2734	.6924	.1114	.9494
991	.5027	.9217	.3406	.7596	.1786	.5976	.0166	.4356	.8546	.2736	.9626	.1116	.9496
994	.5028	.9218	.3408	.7598	.1788	.5977	.0167	.4357	.8547	.2737	.6927	.1117	.9497
997	.5029	.9219	.3409	.7599	.1789	.5979	.0169	.4359	.8549	.2739	.6929	.1119	.9499
419000	15.5030	15.9220	16.3410	16.7600	17.1790	17.5980	18.0170	18.4360	18.8550	19.2740	19.6930	20.1120	20.9500

HARMONICS

BASIC FREQ.	24	25	26	27	28	29	30	31	32	33	34	35	36
419000	10.0560	10.4750	10.8940	11.3130	11.7320	12.1510	12.5700	12.9890	13.4080	13.8270	14.2460	14.6650	15.0840
003	.0561	.4751	.8941	.3131	.7321	.1511	.5701	.9891	.4081	.8271	.2461	.6651	.0841
006	.0561	.4752	.8942	.3132	.7322	.1512	.5702	.9892	.4082	.8272	.2462	.6652	.0842
009	.0562	.4752	.8942	.3132	.7323	.1513	.5703	.9893	.4083	.8273	.2463	.6653	.0843
012	.0563	.4753	.8943	.3133	.7323	.1513	.5704	.9894	.4084	.8274	.2464	.6654	.0844
419015	10.0564	10.4754	10.8944	11.3134	11.7324	12.1514	12.5705	12.9895	13.4085	13.8275	14.2465	14.6655	15.0845
018	.0564	.4755	.8945	.3135	.7325	.1515	.5705	.9896	.4086	.8276	.2466	.6656	.0846
021	.0565	.4755	.8945	.3136	.7326	.1516	.5706	.9897	.4087	.8277	.2467	.6657	.0848
024	.0566	.4756	.8946	.3136	.7327	.1517	.5707	.9897	.4088	.8278	.2468	.6658	.0849
027	.0566	.4757	.8947	.3137	.7328	.1518	.5708	.9898	.4089	.8279	.2469	.6659	.0850
419030	10.0567	10.4758	10.8948	11.3138	11.7328	12.1519	12.5709	12.9899	13.4090	13.8280	14.2470	14.6661	15.0851
033	.0568	.4758	.8949	.3139	.7329	.1520	.5710	.9900	.4091	.8281	.2471	.6662	.0852
036	.0569	.4759	.8949	.3140	.7330	.1520	.5711	.9901	.4092	.8282	.2472	.6663	.0853
039	.0569	.4760	.8950	.3141	.7331	.1521	.5712	.9902	.4092	.8283	.2473	.6664	.0854
042	.0570	.4761	.8951	.3141	.7332	.1522	.5713	.9903	.4093	.8284	.2474	.6665	.0855
419045	10.0571	10.4761	10.8952	11.3142	11.7333	12.1523	12.5714	12.9904	13.4094	13.8285	14.2475	14.6666	15.0856
048	.0572	.4762	.8952	.3143	.7333	.1524	.5714	.9905	.4095	.8286	.2476	.6667	.0857
051	.0572	.4763	.8953	.3144	.7334	.1525	.5715	.9906	.4096	.8287	.2477	.6668	.0858
054	.0573	.4764	.8954	.3145	.7335	.1526	.5716	.9907	.4097	.8288	.2478	.6669	.0859
057	.0574	.4764	.8955	.3145	.7336	.1527	.5717	.9908	.4098	.8289	.2479	.6670	.0861
419060	10.0574	10.4765	10.8956	11.3146	11.7337	12.1527	12.5718	12.9909	13.4099	13.8290	14.2480	14.6671	15.0862
063	.0575	.4766	.8956	.3147	.7338	.1528	.5719	.9910	.4100	.8291	.2481	.6672	.0863
066	.0576	.4767	.8957	.3148	.7338	.1529	.5720	.9910	.4101	.8292	.2482	.6673	.0864
069	.0577	.4767	.8958	.3149	.7339	.1530	.5721	.9911	.4102	.8293	.2483	.6674	.0865
072	.0577	.4768	.8959	.3149	.7340	.1531	.5722	.9912	.4103	.8294	.2484	.6675	.0866
419075	10.0578	10.4769	10.8960	11.3150	11.7341	12.1532	12.5723	12.9913	13.4104	13.8295	14.2486	14.6676	15.0867
078	.0579	.4770	.8960	.3151	.7342	.1533	.5723	.9914	.4105	.8296	.2487	.6677	.0868
081	.0579	.4770	.8961	.3152	.7343	.1533	.5724	.9915	.4106	.8297	.2488	.6678	.0869
084	.0580	.4771	.8962	.3153	.7344	.1534	.5725	.9916	.4107	.8298	.2489	.6679	.0870
087	.0581	.4772	.8963	.3153	.7344	.1535	.5726	.9917	.4108	.8299	.2490	.6680	.0871
419090	10.0582	10.4773	10.8963	11.3154	11.7345	12.1536	12.5727	12.9918	13.4109	13.8300	14.2491	14.6682	15.0872
093	.0582	.4773	.8964	.3155	.7346	.1537	.5728	.9919	.4110	.8301	.2492	.6683	.0873
096	.0583	.4774	.8965	.3156	.7347	.1538	.5729	.9920	.4111	.8302	.2493	.6684	.0875
099	.0584	.4775	.8966	.3157	.7348	.1539	.5730	.9921	.4112	.8303	.2494	.6685	.0876
102	.0584	.4776	.8967	.3158	.7349	.1540	.5731	.9922	.4113	.8304	.2495	.6686	.0877
419105	10.0585	10.4776	10.8967	11.3158	11.7349	12.1540	12.5732	12.9923	13.4114	13.8305	14.2496	14.6687	15.0878
108	.0586	.4777	.8968	.3159	.7350	.1541	.5732	.9923	.4115	.8306	.2497	.6688	.0879
111	.0587	.4778	.8969	.3160	.7351	.1542	.5733	.9924	.4116	.8307	.2498	.6689	.0880
114	.0587	.4779	.8970	.3161	.7352	.1543	.5734	.9925	.4116	.8308	.2499	.6690	.0881
117	.0588	.4779	.8970	.3162	.7353	.1544	.5735	.9926	.4117	.8309	.2500	.6691	.0882
419120	10.0589	10.4780	10.8971	11.3162	11.7354	12.1545	12.5736	12.9927	13.4118	13.8310	14.2501	14.6692	15.0883
123	.0590	.4781	.8972	.3163	.7354	.1546	.5737	.9928	.4119	.8311	.2502	.6693	.0884
126	.0590	.4782	.8973	.3164	.7355	.1547	.5738	.9929	.4120	.8312	.2503	.6694	.0885
129	.0591	.4782	.8974	.3165	.7356	.1547	.5739	.9930	.4121	.8313	.2504	.6695	.0886
132	.0592	.4783	.8974	.3166	.7357	.1548	.5740	.9931	.4122	.8314	.2505	.6696	.0888
419135	10.0592	10.4784	10.8975	11.3166	11.7358	12.1549	12.5741	12.9932	13.4123	13.8315	14.2506	14.6697	15.0889
138	.0593	.4785	.8976	.3167	.7359	.1550	.5741	.9933	.4124	.8316	.2507	.6698	.0890
141	.0594	.4785	.8977	.3168	.7359	.1551	.5742	.9934	.4125	.8317	.2508	.6699	.0891
144	.0595	.4786	.8977	.3169	.7360	.1552	.5743	.9935	.4126	.8318	.2509	.6700	.0892
147	.0595	.4787	.8978	.3170	.7361	.1553	.5744	.9936	.4127	.8319	.2510	.6701	.0893
419150	10.0596	10.4788	10.8979	11.3171	11.7362	12.1554	12.5745	12.9937	13.4128	13.8320	14.2511	14.6703	15.0894
153	.0597	.4788	.8980	.3171	.7363	.1554	.5746	.9937	.4129	.8320	.2512	.6704	.0895
156	.0597	.4789	.8981	.3172	.7364	.1555	.5747	.9938	.4130	.8321	.2513	.6705	.0896
159	.0598	.4790	.8981	.3173	.7365	.1556	.5748	.9939	.4131	.8322	.2514	.6706	.0897
162	.0599	.4791	.8982	.3174	.7365	.1557	.5749	.9940	.4132	.8323	.2515	.6707	.0898
419165	10.0600	10.4791	10.8983	11.3175	11.7366	12.1558	12.5750	12.9941	13.4133	13.8324	14.2516	14.6708	15.0899
168	.0600	.4792	.8984	.3175	.7367	.1559	.5750	.9942	.4134	.8325	.2517	.6709	.0900
171	.0601	.4793	.8984	.3176	.7368	.1560	.5751	.9943	.4135	.8326	.2518	.6710	.0902
174	.0602	.4794	.8985	.3177	.7369	.1560	.5752	.9944	.4136	.8327	.2519	.6711	.0903
177	.0602	.4794	.8986	.3178	.7370	.1561	.5753	.9945	.4137	.8328	.2520	.6712	.0904
419180	10.0603	10.4795	10.8987	11.3179	11.7370	12.1562	12.5754	12.9946	13.4138	13.8329	14.2521	14.6713	15.0905
183	.0604	.4796	.8988	.3179	.7371	.1563	.5755	.9947	.4139	.8330	.2522	.6714	.0906
186	.0605	.4797	.8988	.3180	.7372	.1564	.5756	.9948	.4140	.8331	.2523	.6715	.0907
189	.0605	.4797	.8989	.3181	.7373	.1565	.5757	.9949	.4140	.8332	.2524	.6716	.0908
192	.0606	.4798	.8990	.3182	.7374	.1566	.5758	.9950	.4141	.8333	.2525	.6717	.0909
419195	10.0607	10.4799	10.8991	11.3183	11.7375	12.1567	12.5759	12.9950	13.4142	13.8334	14.2526	14.6718	15.0910
198	.0608	.4800	.8991	.3183	.7375	.1567	.5759	.9951	.4143	.8335	.2527	.6719	.0911
201	.0608	.4800	.8992	.3184	.7376	.1568	.5760	.9952	.4144	.8336	.2528	.6720	.0912
204	.0609	.4801	.8993	.3185	.7377	.1569	.5761	.9953	.4145	.8337	.2529	.6721	.0913
207	.0610	.4802	.8994	.3186	.7378	.1570	.5762	.9954	.4146	.8338	.2530	.6722	.0915
419210	10.0610	10.4803	10.8995	11.3187	11.7379	12.1571	12.5763	12.9955	13.4147	13.8339	14.2531	14.6724	15.0916
213	.0611	.4803	.8995	.3188	.7380	.1572	.5764	.9956	.4148	.8340	.2532	.6725	.0917
216	.0612	.4804	.8996	.3188	.7380	.1573	.5765	.9957	.4149	.8341	.2533	.6726	.0918
219	.0613	.4805	.8997	.3189	.7381	.1574	.5766	.9958	.4150	.8342	.2534	.6727	.0919
222	.0613	.4806	.8998	.3190	.7382	.1574	.5767	.9959	.4151	.8343	.2535	.6728	.0920
419225	10.0614	10.4806	10.8999	11.3191	11.7383	12.1575	12.5768	12.9960	13.4152	13.8344	14.2537	14.6729	15.0921
228	.0615	.4807	.8999	.3192	.7384	.1576	.5768	.9961	.4153	.8345	.2538	.6730	.0922
231	.0615	.4808	.9000	.3192	.7385	.1577	.5769	.9962	.4154	.8346	.2539	.6731	.0923
234	.0616	.4809	.9001	.3193	.7386	.1578	.5770	.9963	.4155	.8347	.2540	.6732	.0924
237	.0617	.4809	.9002	.3194	.7386	.1579	.5771	.9963	.4156	.8348	.2541	.6733	.0925
419240	10.0618	10.4810	10.9002	11.3195	11.7387	12.1580	12.5772	12.9964	13.4157	13.8349	14.2542	14.6734	15.0926
243	.0618	.4811	.9003	.3196	.7388	.1580	.5773	.9965	.4158	.8350	.2543	.6735	.0927
246	.0619	.4812	.9004	.3196	.7389	.1581	.5774	.9966	.4159	.8351	.2544	.6736	.0929
249	.0620	.4812	.9005	.3197	.7390	.1582	.5775	.9967	.4160	.8352	.2545	.6737	.0930
252	.0620	.4813	.9006	.3198	.7391	.1583	.5776	.9968	.4161	.8353	.2546	.6738	.0931
419255	10.0621	10.4814	10.9006	11.3199	11.7391	12.1584	12.5777	12.9969	13.4162	13.8354	14.2547	14.6739	15.0932
258	.0622	.4815	.9007	.3200	.7392	.1585	.5777	.9970	.4163	.8355	.2548	.6740	.0933
261	.0623	.4815	.9008	.3200	.7393	.1586	.5778	.9971	.4164	.8356	.2549	.6741	.0934
264	.0623	.4816	.9009	.3201	.7394	.1587	.5779	.9972	.4164	.8357	.2550	.6742	.0935
267	.0624	.4817	.9009	.3202	.7395	.1587	.5780	.9973	.4165	.8358	.2551	.6743	.0936
419270	10.0625	10.4818	10.9010	11.3203	11.7396	12.1588	12.5781	12.9974	13.4166	13.8359	14.2552	14.6745	15.0937
273	.0626	.4818	.9011	.3204	.7396	.1589	.5782	.9975	.4167	.8360	.2553	.6746	.0938
276	.0626	.4819	.9012	.3205	.7397	.1590	.5783	.9976	.4168	.8361	.2554	.6747	.0939
279	.0627	.4820	.9013	.3205	.7398	.1591	.5784	.9976	.4169	.8362	.2555	.6748	.0940
282	.0628	.4821	.9013	.3206	.7399	.1592	.5785	.9977	.4170	.8363	.2556	.6749	.0942
419285	10.0628	10.4821	10.9014	11.3207	11.7400	12.1593	12.5786	12.9978	13.4171	13.8364	14.2557	14.6750	15.0943
288	.0629	.4822	.9015	.3208	.7401	.1594	.5786	.9979	.4172	.8365	.2558	.6751	.0944
291	.0630	.4823	.9016	.3209	.7401	.1594	.5787	.9980	.4173	.8366	.2559	.6752	.0945
294	.0631	.4824	.9016	.3209	.7402	.1595	.5788	.9981	.4174	.8367	.2560	.6753	.0946
297	.0631	.4824	.9017	.3210	.7403	.1596	.5789	.9982	.4175	.8368	.2561	.6754	.0947
419300	10.0632	10.4825	10.9018	11.3211	11.7404	12.1597	12.5790	12.9983	13.4176	13.8369	14.2562	14.6755	15.0948

MEGACYCLES PER SECOND

H A R M O N I C S

BASIC FREQ.	37	38	39	40	41	42	43	44	45	46	47	48	50
419000	15.5030	15.9220	16.3410	16.7600	17.1790	17.5980	18.0170	18.4360	18.8550	19.2740	19.6930	20.1120	20.9500
003	.5031	.9221	.3411	.7601	.1791	.5981	.0171	.4361	.8551	.2741	.6931	.1121	.9502
006	.5032	.9222	.3412	.7602	.1792	.5983	.0173	.4363	.8553	.2743	.6933	.1123	.9503
009	.5033	.9223	.3414	.7604	.1794	.5984	.0174	.4364	.8554	.2744	.6934	.1124	.9505
012	.5034	.9225	.3415	.7605	.1795	.5985	.0175	.4365	.8555	.2746	.6936	.1126	.9506
419015	15.5036	15.9226	16.3416	16.7606	17.1796	17.5986	18.0176	18.4367	18.8557	19.2747	19.6937	20.1127	20.9508
018	.5037	.9227	.3417	.7607	.1797	.5988	.0178	.4368	.8558	.2748	.6938	.1129	.9509
021	.5038	.9228	.3418	.7608	.1799	.5989	.0179	.4369	.8559	.2750	.6940	.1130	.9511
024	.5039	.9229	.3419	.7610	.1800	.5990	.0180	.4371	.8561	.2751	.6941	.1132	.9512
027	.5040	.9230	.3421	.7611	.1801	.5991	.0182	.4372	.8562	.2752	.6943	.1133	.9514
419030	15.5041	15.9231	16.3422	16.7612	17.1802	17.5993	18.0183	18.4373	18.8564	19.2754	19.6944	20.1134	20.9515
033	.5042	.9233	.3423	.7613	.1804	.5994	.0184	.4375	.8565	.2755	.6946	.1136	.9517
036	.5043	.9234	.3424	.7614	.1805	.5995	.0185	.4376	.8566	.2757	.6947	.1137	.9518
039	.5044	.9235	.3425	.7616	.1806	.5996	.0187	.4377	.8568	.2758	.6948	.1139	.9520
042	.5046	.9236	.3426	.7617	.1807	.5998	.0188	.4378	.8569	.2759	.6950	.1140	.9521
419045	15.5047	15.9237	16.3428	16.7618	17.1808	17.5999	18.0189	18.4380	18.8570	19.2761	19.6951	20.1142	20.9523
048	.5048	.9238	.3429	.7619	.1810	.6000	.0191	.4381	.8572	.2762	.6953	.1143	.9524
051	.5049	.9239	.3430	.7620	.1811	.6001	.0192	.4382	.8573	.2763	.6954	.1144	.9526
054	.5050	.9241	.3431	.7622	.1812	.6003	.0193	.4384	.8574	.2765	.6955	.1146	.9527
057	.5051	.9242	.3432	.7623	.1813	.6004	.0195	.4385	.8576	.2766	.6957	.1147	.9529
419060	15.5052	15.9243	16.3433	16.7624	17.1815	17.6005	18.0196	18.4386	18.8577	19.2768	19.6958	20.1149	20.9530
063	.5053	.9244	.3435	.7625	.1816	.6006	.0197	.4388	.8578	.2769	.6960	.1150	.9532
066	.5054	.9245	.3436	.7626	.1817	.6008	.0198	.4389	.8580	.2770	.6961	.1152	.9533
069	.5056	.9246	.3437	.7628	.1818	.6009	.0200	.4390	.8581	.2772	.6962	.1153	.9535
072	.5057	.9247	.3438	.7629	.1820	.6010	.0201	.4392	.8582	.2773	.6964	.1155	.9536
419075	15.5058	15.9249	16.3439	16.7630	17.1821	17.6012	18.0202	18.4393	18.8584	19.2775	19.6965	20.1156	20.9538
078	.5059	.9250	.3440	.7631	.1822	.6013	.0204	.4394	.8585	.2776	.6967	.1157	.9539
081	.5060	.9251	.3442	.7632	.1823	.6014	.0205	.4396	.8586	.2777	.6968	.1159	.9541
084	.5061	.9252	.3443	.7634	.1824	.6015	.0206	.4397	.8588	.2779	.6969	.1160	.9542
087	.5062	.9253	.3444	.7635	.1826	.6017	.0207	.4398	.8589	.2780	.6971	.1162	.9544
419090	15.5063	15.9254	16.3445	16.7636	17.1827	17.6018	18.0209	18.4400	18.8591	19.2781	19.6972	20.1163	20.9545
093	.5064	.9255	.3446	.7637	.1828	.6019	.0210	.4401	.8592	.2783	.6974	.1165	.9547
096	.5066	.9256	.3447	.7638	.1829	.6020	.0211	.4402	.8593	.2784	.6975	.1166	.9548
099	.5067	.9258	.3449	.7640	.1831	.6022	.0213	.4404	.8595	.2786	.6977	.1168	.9550
102	.5068	.9259	.3450	.7641	.1832	.6023	.0214	.4405	.8596	.2787	.6978	.1169	.9551
419105	15.5069	15.9260	16.3451	16.7642	17.1833	17.6024	18.0215	18.4406	18.8597	19.2788	19.6979	20.1170	20.9553
108	.5070	.9261	.3452	.7643	.1834	.6025	.0216	.4408	.8599	.2790	.6981	.1172	.9554
111	.5071	.9262	.3453	.7644	.1836	.6027	.0218	.4409	.8600	.2791	.6982	.1173	.9556
114	.5072	.9263	.3454	.7646	.1837	.6028	.0219	.4410	.8601	.2792	.6984	.1175	.9557
117	.5073	.9264	.3456	.7647	.1838	.6029	.0220	.4411	.8603	.2794	.6985	.1176	.9559
419120	15.5074	15.9266	16.3457	16.7648	17.1839	17.6030	18.0222	18.4413	18.8604	19.2795	19.6986	20.1178	20.9560
123	.5076	.9267	.3458	.7649	.1840	.6032	.0223	.4414	.8605	.2797	.6988	.1179	.9562
126	.5077	.9268	.3459	.7650	.1842	.6033	.0224	.4415	.8607	.2798	.6989	.1180	.9563
129	.5078	.9269	.3460	.7652	.1843	.6034	.0225	.4417	.8608	.2799	.6991	.1182	.9565
132	.5079	.9270	.3461	.7653	.1844	.6035	.0227	.4418	.8609	.2801	.6992	.1183	.9566
419135	15.5080	15.9271	16.3463	16.7654	17.1845	17.6037	18.0228	18.4419	18.8611	19.2802	19.6993	20.1185	20.9568
138	.5081	.9272	.3464	.7655	.1847	.6038	.0229	.4421	.8612	.2803	.6995	.1186	.9569
141	.5082	.9274	.3465	.7656	.1848	.6039	.0231	.4422	.8613	.2805	.6996	.1188	.9571
144	.5083	.9275	.3466	.7658	.1849	.6040	.0232	.4423	.8615	.2806	.6998	.1189	.9572
147	.5084	.9276	.3467	.7659	.1850	.6042	.0233	.4425	.8616	.2808	.6999	.1191	.9574
419150	15.5086	15.9277	16.3469	16.7660	17.1852	17.6043	18.0235	18.4426	18.8618	19.2809	19.7001	20.1192	20.9575
153	.5087	.9278	.3470	.7661	.1853	.6044	.0236	.4427	.8619	.2810	.7002	.1193	.9577
156	.5088	.9279	.3471	.7662	.1854	.6046	.0237	.4429	.8620	.2812	.7003	.1195	.9578
159	.5089	.9280	.3472	.7664	.1855	.6047	.0238	.4430	.8622	.2813	.7005	.1196	.9580
162	.5090	.9282	.3473	.7665	.1856	.6048	.0240	.4431	.8623	.2815	.7006	.1198	.9581
419165	15.5091	15.9283	16.3474	16.7666	17.1858	17.6049	18.0241	18.4433	18.8624	19.2816	19.7008	20.1199	20.9583
168	.5092	.9284	.3476	.7667	.1859	.6051	.0242	.4434	.8626	.2817	.7009	.1201	.9584
171	.5093	.9285	.3477	.7668	.1860	.6052	.0244	.4435	.8627	.2819	.7010	.1202	.9586
174	.5094	.9286	.3478	.7670	.1861	.6053	.0245	.4437	.8628	.2820	.7012	.1204	.9587
177	.5095	.9287	.3479	.7671	.1863	.6054	.0246	.4438	.8630	.2821	.7013	.1205	.9589
419180	15.5097	15.9288	16.3480	16.7672	17.1864	17.6056	18.0247	18.4439	18.8631	19.2823	19.7015	20.1206	20.9590
183	.5098	.9290	.3481	.7673	.1865	.6057	.0249	.4441	.8632	.2824	.7016	.1208	.9592
186	.5099	.9291	.3483	.7674	.1866	.6058	.0250	.4442	.8634	.2826	.7017	.1209	.9593
189	.5100	.9292	.3484	.7676	.1867	.6059	.0251	.4443	.8635	.2827	.7019	.1211	.9595
192	.5101	.9293	.3485	.7677	.1869	.6061	.0253	.4444	.8636	.2828	.7020	.1212	.9596
419195	15.5102	15.9294	16.3486	16.7678	17.1870	17.6062	18.0254	18.4446	18.8638	19.2830	19.7022	20.1214	20.9598
198	.5103	.9295	.3487	.7679	.1871	.6063	.0255	.4447	.8639	.2831	.7023	.1215	.9599
201	.5104	.9296	.3488	.7680	.1872	.6064	.0256	.4448	.8640	.2832	.7024	.1216	.9601
204	.5105	.9298	.3490	.7682	.1874	.6066	.0258	.4450	.8642	.2834	.7026	.1218	.9602
207	.5107	.9299	.3491	.7683	.1875	.6067	.0259	.4451	.8643	.2835	.7027	.1219	.9604
419210	15.5108	15:9300	16.3492	16.7684	17.1876	17.6068	18.0260	18.4452	18.8645	19.2837	19.7029	20.1221	20.9605
213	.5109	.9301	.3493	.7685	.1877	.6069	.0262	.4454	.8646	.2838	.7030	.1222	.9607
216	.5110	.9302	.3494	.7686	.1879	.6071	.0263	.4455	.8647	.2839	.7032	.1224	.9608
219	.5111	.9303	.3495	.7688	.1880	.6072	.0264	.4456	.8649	.2841	.7033	.1225	.9610
222	.5112	.9304	.3497	.7689	.1881	.6073	.0265	.4458	.8650	.2842	.7034	.1227	.9611
419225	15.5113	15.9306	16.3498	16.7690	17.1882	17.6075	18.0267	18.4459	18.8651	19.2844	19.7036	20.1228	20.9613
228	.5114	.9307	.3499	.7691	.1883	.6076	.0268	.4460	.8653	.2845	.7037	.1229	.9614
231	.5115	.9308	.3500	.7692	.1885	.6077	.0269	.4462	.8654	.2846	.7039	.1231	.9616
234	.5117	.9309	.3501	.7694	.1886	.6078	.0271	.4463	.8655	.2848	.7040	.1232	.9617
237	.5118	.9310	.3502	.7695	.1887	.6080	.0272	.4464	.8657	.2849	.7041	.1234	.9619
419240	15.5119	15.9311	16.3504	16.7696	17.1888	17.6081	18.0273	18.4466	18.8658	19.2850	19.7043	20.1235	20.9620
243	.5120	.9312	.3505	.7697	.1890	.6082	.0274	.4467	.8659	.2852	.7044	.1237	.9622
246	.5121	.9313	.3506	.7698	.1891	.6083	.0276	.4468	.8661	.2853	.7046	.1238	.9623
249	.5122	.9315	.3507	.7700	.1892	.6085	.0277	.4470	.8662	.2855	.7047	.1240	.9625
252	.5123	.9316	.3508	.7701	.1893	.6086	.0278	.4471	.8663	.2856	.7048	.1241	.9626
419255	15.5124	15.9317	16.3509	16.7702	17.1895	17.6087	18.0280	18.4472	18.8665	19.2857	19.7050	20.1242	20.9628
258	.5125	.9318	.3511	.7703	.1896	.6088	.0281	.4474	.8666	.2859	.7051	.1244	.9629
261	.5127	.9319	.3512	.7704	.1897	.6090	.0282	.4475	.8667	.2860	.7053	.1245	.9631
264	.5128	.9320	.3513	.7706	.1898	.6091	.0284	.4476	.8669	.2861	.7054	.1247	.9632
267	.5129	.9321	.3514	.7707	.1899	.6092	.0285	.4477	.8670	.2863	.7055	.1248	.9634
419270	15.5130	15.9323	16.3515	16.7708	17.1901	17.6093	18.0286	18.4479	18.8672	19.2864	19.7057	20.1250	20.9635
273	.5131	.9324	.3516	.7709	.1902	.6095	.0287	.4480	.8673	.2866	.7058	.1251	.9637
276	.5132	.9325	.3518	.7710	.1903	.6096	.0289	.4481	.8674	.2867	.7060	.1252	.9638
279	.5133	.9326	.3519	.7712	.1904	.6097	.0290	.4483	.8676	.2868	.7061	.1254	.9640
282	.5134	.9327	.3520	.7713	.1906	.6098	.0291	.4484	.8677	.2870	.7063	.1255	.9641
419285	15.5135	15.9328	16.3521	16.7714	17.1907	17.6100	18.0293	18.4485	18.8678	19.2871	19.7064	20.1257	20.9643
288	.5137	.9329	.3522	.7715	.1908	.6101	.0294	.4487	.8680	.2872	.7065	.1258	.9644
291	.5138	.9331	.3523	.7716	.1909	.6102	.0295	.4488	.8681	.2874	.7067	.1260	.9646
294	.5139	.9332	.3525	.7718	.1911	.6103	.0296	.4489	.8682	.2875	.7068	.1261	.9647
297	.5140	.9333	.3526	.7719	.1912	.6105	.0298	.4491	.8684	.2877	.7070	.1263	.9649
419300	15.5141	15.9334	16.3527	16.7720	17.1913	17.6106	18.0299	18.4492	18.8685	19.2878	19.7071	20.1264	20.9650

HARMONICS

BASIC FREQ.	24	25	26	27	28	29	30	31	32	33	34	35	36
419300	10.0632	10.4825	10.9018	11.3211	11.7404	12.1597	12.5790	12.9983	13.4176	13.8369	14.2562	14.6755	15.0948
303	.0633	.4826	.9019	.3212	.7405	.1598	.5791	.9984	.4177	.8370	.2563	.6756	.0949
306	.0633	.4827	.9020	.3213	.7406	.1599	.5792	.9985	.4178	.8371	.2564	.6757	.9050
309	.0634	.4827	.9020	.3213	.7407	.1600	.5793	.9986	.4179	.8372	.2565	.6758	.0951
312	.0635	.4828	.9021	.3214	.7407	.1600	.5794	.9987	.4180	.8373	.2566	.6759	.0952
419315	10.0636	10.4829	10.9022	11.3215	11.7408	12.1601	12.5795	12.9988	13.4181	13.8374	14.2567	14.6760	15.0953
318	.0636	.4830	.9023	.3216	.7409	.1602	.5795	.9989	.4182	.8375	.2568	.6761	.0954
321	.0637	.4830	.9023	.3217	.7410	.1603	.5796	.9990	.4183	.8376	.2569	.6762	.0956
324	.0638	.4831	.9024	.3217	.7411	.1604	.5797	.9990	.4184	.8377	.2570	.6763	.0957
327	.0638	.4832	.9025	.3218	.7412	.1605	.5798	.9991	.4185	.8378	.2571	.6764	.0958
419330	10.0639	10.4833	10.9026	11.3219	11.7412	12.1606	12.5799	12.9992	13.4186	13.8379	14.2572	14.6766	15.0959
333	.0640	.4833	.9027	.3220	.7413	.1607	.5800	.9993	.4187	.8380	.2573	.6767	.0960
336	.0641	.4834	.9027	.3221	.7414	.1607	.5801	.9994	.4188	.8381	.2574	.6768	.0961
339	.0641	.4835	.9028	.3222	.7415	.1608	.5802	.9995	.4188	.8382	.2575	.6769	.0962
342	.0642	.4836	.9029	.3222	.7416	.1609	.5803	.9996	.4189	.8383	.2576	.6770	.0963
419345	10.0643	10.4836	10.9030	11.3223	11.7417	12.1610	12.5804	12.9997	13.4190	13.8384	14.2577	14.6771	15.0964
348	.0644	.4837	.9030	.3224	.7417	.1611	.5804	.9998	.4191	.8385	.4578	.6772	.0965
351	.0644	.4838	.9031	.3225	.7418	.1612	.5805	.9999	.4192	.8386	.2579	.6773	.0966
354	.0645	.4839	.9032	.3226	.7419	.1613	.5806	13.0000	.4193	.8387	.2580	.6774	.0967
357	.0646	.4839	.9033	.3226	.7420	.1614	.5807	.0001	.4194	.8388	.2581	.6775	.0969
419360	10.0646	10.4840	10.9034	11.3227	11.7421	12.1614	12.5808	13.0002	13.4195	13.8389	14.2582	14.6776	15.0970
363	.0647	.4841	.9034	.3228	.7422	.1615	.5809	.0003	.4196	.8390	.2583	.6777	.0971
366	.0648	.4842	.9035	.3229	.7422	.1616	.5810	.0003	.4197	.8391	.2584	.6778	.0972
369	.0649	.4842	.9036	.3230	.7423	.1617	.5811	.0004	.4198	.8392	.2585	.6779	.0973
372	.0649	.4843	.9037	.3230	.7424	.1618	.5812	.0005	.4199	.8393	.2586	.6780	.0974
419375	10.0650	10.4844	10.9038	11.3231	11.7425	12.1619	12.5813	13.0006	13.4200	13.8394	14.2588	14.6781	15.0975
378	.0651	.4845	.9038	.3232	.7426	.1620	.5813	.0007	.4201	.8395	.2589	.6782	.0976
381	.0651	.4845	.9039	.3233	.7427	.1620	.5814	.0008	.4202	.8396	.2590	.6783	.0977
384	.0652	.4846	.9040	.3234	.7428	.1621	.5815	.0009	.4203	.8397	.2591	.6784	.0978
387	.0653	.4847	.9041	.3234	.7428	.1622	.5816	.0010	.4204	.8398	.2592	.6785	.0979
419390	10.0654	10.4848	10.9041	11.3235	11.7429	12.1623	12.5817	13.0011	13.4205	13.8399	14.2593	14.6787	15.0980
393	.0654	.4848	.9042	.3236	.7430	.1624	.5818	.0012	.4206	.8400	.2594	.6788	.0981
396	.0655	.4849	.9043	.3237	.7431	.1625	.5819	.0013	.4207	.8401	.2595	.6789	.0983
399	.0656	.4850	.9044	.3238	.7432	.1626	.5820	.0014	.4208	.8402	.2596	.6790	.0984
402	.0656	.4851	.9045	.3239	.7433	.1627	.5821	.0015	.4209	.8403	.2597	.6791	.0985
419405	10.0657	10.4851	10.9045	11.3239	11.7433	12.1627	12.5822	13.0016	13.4210	13.8404	14.2598	14.6792	15.0986
408	.0658	.4852	.9046	.3240	.7434	.1628	.5822	.0016	.4211	.8405	.2599	.6793	.0987
411	.0659	.4853	.9047	.3241	.7435	.1629	.5823	.0017	.4212	.8406	.2600	.6794	.0988
414	.0659	.4854	.9048	.3242	.7436	.1630	.5824	.0018	.4212	.8407	.2601	.6795	.0989
417	.0660	.4854	.9048	.3243	.7437	.1631	.5825	.0019	.4213	.8408	.2602	.6796	.0990
419420	10.0661	10.4855	10.9049	11.3243	11.7438	12.1632	12.5826	13.0020	13.4214	13.8409	14.2603	14.6797	15.0991
423	.0662	.4856	.9050	.3244	.7438	.1633	.5827	.0021	.4215	.8410	.2604	.6798	.0992
426	.0662	.4857	.9051	.3245	.7439	.1634	.5828	.0022	.4216	.8411	.2605	.6799	.0993
429	.0663	.4857	.9052	.3246	.7440	.1634	.5829	.0023	.4217	.8412	.2606	.6800	.0994
432	.0664	.4858	.9052	.3247	.7441	.1635	.5830	.0024	.4218	.8413	.2607	.6801	.0996
419435	10.0664	10.4859	10.9053	11.3247	11.7442	12.1636	12.5831	13.0025	13.4219	13.8414	14.2608	14.6802	15.0997
438	.0665	.4860	.9054	.3248	.7443	.1637	.5831	.0026	.4220	.8415	.2609	.6803	.0998
441	.0666	.4860	.9055	.3249	.7443	.1638	.5832	.0027	.4221	.8416	.2610	.6804	.0999
444	.0667	.4861	.9055	.3250	.7444	.1639	.5833	.0028	.4222	.8417	.2611	.6805	.1000
447	.0667	.4862	.9056	.3251	.7445	.1640	.5834	.0029	.4223	.8418	.2612	.6806	.1001
419450	10.0668	10.4863	10.9057	11.3252	11.7446	12.1641	12.5835	13.0030	13.4224	13.8419	14.2613	14.6808	15.1002
453	.0669	.4863	.9058	.3252	.7447	.1641	.5836	.0030	.4225	.8419	.2614	.6809	.1003
456	.0669	.4864	.9059	.3253	.7448	.1642	.5837	.0031	.4226	.8420	.2615	.6810	.1004
459	.0670	.4865	.9059	.3254	.7449	.1643	.5838	.0032	.4227	.8421	.2616	.6811	.1005
462	.0671	.4866	.9060	.3255	.7449	.1644	.5839	.0033	.4228	.8422	.2617	.6812	.1006
419465	10.0672	10.4866	10.9061	11.3256	11.7450	12.1645	12.5840	13.0034	13.4229	13.8423	14.2618	14.6813	15.1007
468	.0672	.4867	.9062	.3256	.7451	.1646	.5840	.0035	.4230	.8424	.2619	.6814	.1008
471	.0673	.4868	.9062	.3257	.7452	.1647	.5841	.0036	.4231	.8425	.2620	.6815	.1010
474	.0674	.4869	.9063	.3258	.7453	.1647	.5842	.0037	.4232	.8426	.2621	.6816	.1011
477	.0674	.4869	.9064	.3259	.7454	.1648	.5843	.0038	.4233	.8427	.2622	.6817	.1012
419480	10.0675	10.4870	10.9065	11.3260	11.7454	12.1649	12.5844	13.0039	13.4234	13.8428	14.2623	14.6818	15.1013
483	.0676	.4871	.9066	.3260	.7455	.1650	.5845	.0040	.4235	.8429	.2624	.6819	.1014
486	.0677	.4872	.9066	.3261	.7456	.1651	.5846	.0041	.4236	.8430	.2625	.6820	.1015
489	.0677	.4872	.9067	.3262	.7457	.1652	.5847	.0042	.4236	.8431	.2626	.6821	.1016
492	.0678	.4873	.9068	.3263	.7458	.1653	.5848	.0043	.4237	.8432	.2627	.6822	.1017
419495	10.0679	10.4874	10.9069	11.3264	11.7459	12.1654	12.5849	13.0043	13.4238	13.8433	14.2628	14.6823	15.1018
498	.0680	.4875	.9069	.3264	.7459	.1654	.5849	.0044	.4239	.8434	.2629	.6824	.1019
501	.0680	.4875	.9070	.3265	.7460	.1655	.5850	.0045	.4240	.8435	.2630	.6825	.1020
504	.0681	.4876	.9071	.3266	.7461	.1656	.5851	.0046	.4241	.8436	.2631	.6826	.1021
507	.0682	.4877	.9072	.3267	.7462	.1657	.5852	0047	.4242	.8437	.2632	.6827	.1023
419510	10.0682	10.4878	10.9073	11.3268	11.7463	12.1658	12.5853	13.0048	13.4243	13.8438	14.2633	14.6829	15.1024
513	.0683	.4878	.9073	.3269	.7464	.1659	.5854	.0049	.4244	.8439	.2634	.6830	.1025
516	.0684	.4879	.9074	.3269	.7464	.1660	.5855	.0050	.4245	.8440	.2635	.6831	.1026
519	.0685	.4880	.9075	.3270	.7465	.1661	.5856	.0051	.4246	.8441	.2636	.6832	.1027
522	.0685	.4881	.9076	.3271	.7466	.1661	.5857	.0052	.4247	.8442	.2637	.6833	.1028
419525	10.0686	10.4881	10.9077	13.3272	11.7467	12.1662	12.5858	13.0053	13.4248	13.8443	14.2639	14.6834	15.1029
528	.0687	.4882	.9077	.3273	.7468	.1663	.5858	.0054	.4249	.8444	.2640	.6835	.1030
531	.0687	.4883	.9078	.3273	.7469	.1664	.5859	.0055	.4250	.8445	.2641	.6836	.1031
534	.0688	.4884	.9079	.3274	.7470	.1665	.5860	.0056	.4251	.8446	.2642	.6837	.1032
537	.0689	.4884	.9080	.3275	.7470	.1666	.5861	.0056	.4252	.8447	.2643	.6838	.1033
419540	10.0690	10.4885	10.9080	11.3276	11.7471	12.1667	12.5862	13.0057	13.4253	13.8448	14.2644	14.6839	15.1034
543	.0690	.4886	.9081	.3277	.7472	.1667	.5863	.0058	.4254	.8449	.2645	.6840	.1035
546	.0691	.4887	.9082	.3277	.7473	.1668	.5864	.0059	.4255	.8450	.2646	.6841	.1037
549	.0692	.4887	.9083	.3278	.7474	.1669	.5865	.0060	.4256	.8451	.2647	.6842	.1038
552	.0692	.4888	.9084	.3279	.7475	.1670	.5866	.0061	.4257	.8452	.2648	.6843	.1039
419555	10.0693	10.4889	10.9084	11.3280	11.7475	12.1671	12.5867	13.0062	13.4258	13.8453	14.2649	14.6844	15.1040
558	.0694	.4890	.9085	.3281	.7476	.1672	.5867	.0063	.4259	.8454	.2650	.6845	.1041
561	.0695	.4890	.9086	.3281	.7477	.1673	.5868	.0064	.4260	.8455	.2651	.6846	.1042
564	.0695	.4891	.9087	.3282	.7478	.1674	.5869	.0065	.4260	.8456	.2652	.6847	.1043
567	.0696	.4892	.9087	.3283	.7479	.1674	.5870	.0066	.4261	.8457	.2653	.6848	.1044
419570	10.0697	10.4893	10.9088	11.3284	11.7480	12.1675	12.5871	13.0067	13.4262	13.8458	14.2654	14.6850	15.1045
573	.0698	.4893	.9089	.3285	.7480	.1676	.5872	.0068	.4263	.8459	.2655	.6851	.1046
576	.0698	.4894	.9090	.3286	.7481	.1677	.5873	.0069	.4264	.8460	.2656	.6852	.1047
579	.0699	.4895	.9091	.3286	.7482	.1678	.5874	.0069	.4265	.8461	.2657	.6853	.1048
582	.0700	.4896	.9091	.3287	.7483	.1679	.5875	.0070	.4266	.8462	.2658	.6854	.1050
419585	10.0700	10.4896	10.9092	11.3288	11.7484	12.1680	12.5876	13.0071	13.4267	13.8463	14.2659	14.6855	15.1051
588	.0701	.4897	.9093	.3289	.7485	.1681	.5876	.0072	.4268	.8464	.2660	.6856	.1052
591	.0702	.4898	.9094	.3290	.7485	.1681	.5877	.0073	.4269	.8465	.2661	.6857	.1053
594	.0703	.4899	.9094	.3290	.7486	.1682	.5878	.0074	.4270	.8466	.2662	.6858	.1054
597	.0703	.4899	.9095	.3291	.7487	.1683	.5879	.0075	.4271	.8467	.2663	.6859	.1055
419600	10.0704	10.4900	10.9096	11.3292	11.7488	12.1684	12.5880	13.0076	13.4272	13.8468	14.2664	14.6860	15.1056

MEGACYCLES PER SECOND

HARMONICS

BASIC FREQ.	37	38	39	40	41	42	43	44	45	46	47	48	50
419300	15.5141	15.9334	16.3527	16.7720	17.1913	17.6106	18.0299	18.4492	18.8685	19.2878	19.7071	20.1264	20.9650
303	.5142	.9335	.3528	.7721	.1914	.6107	.0300	.4493	.8686	.2879	.7072	.1265	.9652
306	.5143	.9336	.3529	.7722	.1915	.6109	.0302	.4495	.8688	.2881	.7074	.1267	.9653
309	.5144	.9337	.3531	.7724	.1917	.6110	.0303	.4496	.8689	.2882	.7075	.1268	.9655
312	.5145	.9339	.3532	.7725	.1918	.6111	.0304	.4497	.8690	.2884	.7077	.1270	.9656
419315	15.5147	15.9340	16.3533	16.7726	17.1919	17.6112	18.0305	18.4499	18.8692	19.2885	19.7078	20.1271	20.9658
318	.5148	.9341	.3534	.7727	.1920	.6114	.0307	.4500	.8693	.2886	.7079	.1273	.9659
321	.5149	.9342	.3535	.7728	.1922	.6115	.0308	.4501	.8694	.2888	.7081	.1274	.9661
324	.5150	.9343	.3536	.7730	.1923	.6116	.0309	.4503	.8696	.2889	.7082	.1276	.9662
327	.5151	.9344	.3538	.7731	.1924	.6117	.0311	.4504	.8697	.2890	.7084	.1277	.9664
419330	15.5152	15.9345	16.3539	16.7732	17.1925	17.6119	18.0312	18.4505	18.8699	19.2892	19.7085	20.1278	20.9665
333	.5153	.9347	.3540	.7733	.1927	.6120	.0313	.4507	.8700	.2893	.7087	.1280	.9667
336	.5154	.9348	.3541	.7734	.1928	.6121	.0314	.4508	.8701	.2895	.7088	.1281	.9668
339	.5155	.9349	.3542	.7736	.1929	.6122	.0316	.4509	.8703	.2896	.7089	.1283	.9670
342	.5157	.9350	.3543	.7737	.1930	.6124	.0317	.4510	.8704	.2897	.7091	.1284	.9671
419345	15.5158	15.9351	16.3545	16.7738	17.1931	17.6125	18.0318	18.4512	18.8705	19.2899	19.7092	20.1286	20.9673
348	.5159	.9352	.3546	.7739	.1933	.6126	.0320	.4513	.8707	.2900	.7094	.1287	.9674
351	.5160	.9353	.3547	.7740	.1934	.6127	.0321	.4514	.8708	.2901	.7095	.1288	.9676
354	.5161	.9355	.3548	.7742	.1935	.6129	.0322	.4516	.8709	.2903	.7096	.1290	.9677
357	.5162	.9356	.3549	.7743	.1936	.6130	.0324	.4517	.8711	.2904	.7098	.1291	.9679
419360	15.5163	15.9357	16.3550	16.7744	17.1938	17.6131	18.0325	18.4518	18.8712	19.2906	19.7099	20.1293	20.9680
363	.5164	.9358	.3552	.7745	.1939	.6132	.0326	.4520	.8713	.2907	.7101	.1294	.9682
366	.5165	.9359	.3553	.7746	.1940	.6134	.0327	.4521	.8715	.2908	.7102	.1296	.9683
369	.5167	.9360	.3554	.7748	.1941	.6135	.0329	.4522	.8716	.2910	.7103	.1297	.9685
372	.5168	.9361	.3555	.7749	.1943	.6136	.0330	.4524	.8717	.2911	.7105	.1299	.9686
419375	15.5169	15.9363	16.3556	16.7750	17.1944	17.6138	18.0331	18.4525	18.8719	19.2913	19.7106	20.1300	20.9688
378	.5170	.9364	.3557	.7751	.1945	.6139	.0333	.4526	.8720	.2914	.7108	.1301	.9689
381	.5171	.9365	.3559	.7752	.1946	.6140	.0334	.4528	.8721	.2915	.7109	.1303	.9691
384	.5172	.9366	.3560	.7754	.1947	.6141	.0335	.4529	.8723	.2917	.7110	.1304	.9692
387	.5173	.9367	.3561	.7755	.1949	.6143	.0336	.4530	.8724	.2918	.7112	.1306	.9694
419390	15.5174	15.9368	16.3562	16.7756	17.1950	17.6144	18.0338	18.4532	18.8726	19.2919	19.7113	20.1307	20.9695
393	.5175	.9369	.3563	.7757	.1951	.6145	.0339	.4533	.8727	.2921	.7115	.1309	.9697
396	.5177	.9370	.3564	.7758	.1952	.6146	.0340	.4534	.8728	.2922	.7116	.1310	.9698
399	.5178	.9372	.3566	.7760	.1954	.6148	.0342	.4536	.8730	.2924	.7118	.1312	.9700
402	.5179	.9373	.3567	.7761	.1955	.6149	.0343	.4537	.8731	.2925	.7119	.1313	.9701
419405	15.5180	15.9374	16.3568	16.7762	17.1956	17.6150	18.0344	18.4538	18.8732	19.2926	19.7120	20.1314	20.9703
408	.5181	.9375	.3569	.7763	.1957	.6151	.0345	.4540	.8734	.2928	.7122	.1316	.9704
411	.5182	.9376	.3570	.7764	.1959	.6153	.0347	.4541	.8735	.2929	.7123	.1317	.9706
414	.5183	.9377	.3571	.7766	.1960	.6154	.0348	.4542	.8736	.2930	.7125	.1319	.9707
417	.5184	.9378	.3573	.7767	.1961	.6155	.0349	.4543	.8738	.2932	.7126	.1320	.9709
419420	15.5185	15.9380	16.3574	16.7768	17.1962	17.6156	18.0351	18.4545	18.8739	19.2933	19.7127	20.1322	20.9710
423	.5187	.9381	.3575	.7769	.1963	.6158	.0352	.4546	.8740	.2935	.7129	.1323	.9712
426	.5188	.9382	.3576	.7770	.1965	.6159	.0353	.4547	.8742	.2936	.7130	.1324	.9713
429	.5189	.9383	.3577	.7772	.1966	.6160	.0354	.4549	.8743	.2937	.7132	.1326	.9715
432	.5190	.9384	.3578	.7773	.1967	.6161	.0356	.4550	.8744	.2939	.7133	.1327	.9716
419435	15.5191	15.9385	16.3580	16.7774	17.1968	17.6163	18.0357	18.4551	18.8746	19.2940	19.7134	20.1329	20.9718
438	.5192	.9386	.3581	.7775	.1970	.6164	.0358	.4553	.8747	.2941	.7136	.1330	.9719
441	.5193	.9388	.3582	.7776	.1971	.6165	.0360	.4554	.8748	.2943	.7137	.1332	.9721
444	.5194	.9389	.3583	.7778	.1972	.6166	.0361	.4555	.8750	.2944	.7139	.1333	.9722
447	.5195	.9390	.3584	.7779	.1973	.6168	.0362	.4557	.8751	.2946	.7140	.1335	.9724
419450	15.5197	15.9391	16.3586	16.7780	17.1975	17.6169	18.0364	18.4558	18.8753	19.2947	19.7142	20.1336	20.9725
453	.5198	.9392	.3587	.7781	.1976	.6170	.0365	.4559	.8754	.2948	.7143	.1337	.9727
456	.5199	.9393	.3588	.7782	.1977	.6172	.0366	.4561	.8755	.2950	.7144	.1339	.9728
459	.5200	.9394	.3589	.7784	.1978	.6173	.0367	.4562	.8757	.2951	.7146	.1340	.9730
462	.5201	.9396	.3590	.7785	.1979	.6174	.0369	.4563	.8758	.2953	.7147	.1342	.9731
419465	15.5202	15.9397	16.3591	16.7786	17.1981	17.6175	18.0370	18.4565	18.8759	19.2954	19.7149	20.1343	20.9733
468	.5203	.9398	.3593	.7787	.1982	.6177	.0371	.4566	.8761	.2955	.7150	.1345	.9734
471	.5204	.9399	.3594	.7788	.1983	.6178	.0373	.4567	.8762	.2957	.7151	.1346	.9736
474	.5205	.9400	.3595	.7790	.1984	.6179	.0374	.4569	.8763	.2958	.7153	.1348	.9737
477	.5206	.9401	.3596	.7791	.1986	.6180	.0375	.4570	.8765	.2959	.7154	.1349	.9739
419480	15.5208	15.9402	16.3597	16.7792	17.1987	17.6182	18.0376	18.4571	18.8766	19.2961	19.7156	20.1350	20.9740
483	.5209	.9404	.3598	.7793	.1988	.6183	.0378	.4573	.8767	.2962	.7157	.1352	.9742
486	.5210	.9405	.3600	.7794	.1989	.6184	.0379	.4574	.8769	.2964	.7158	.1353	.9743
489	.5211	.9406	.3601	.7796	.1990	.6185	.0380	.4575	.8770	.2965	.7160	.1355	.9745
492	.5212	.9407	.3602	.7797	.1992	.6187	.0382	.4576	.8771	.2966	.7161	.1356	.9746
419495	15.5213	15.9408	16.3603	16.7798	17.1993	17.6188	18.0383	18.4578	18.8773	19.2968	19.7163	20.1358	20.9748
498	.5214	.9409	.3604	.7799	.1994	.6189	.0384	.4579	.8774	.2969	.7164	.1359	.9749
501	.5215	.9410	.3605	.7800	.1995	.6190	.0385	.4580	.8775	.2970	.7165	.1360	.9751
504	.5216	.9412	.3607	.7802	.1997	.6192	.0387	.4582	.8777	.2972	.7167	.1362	.9752
507	.5218	.9413	.3608	.7803	.1998	.6193	.0388	.4583	.8778	.2973	.7168	.1363	.9754
419510	15.5219	15.9414	16.3609	16.7804	17.1999	17.6194	18.0389	18.4584	18.8780	19.2975	19.7170	20.1365	20.9755
513	.5220	.9415	.3610	.7805	.2000	.6195	.0391	.4586	.8781	.2976	.7171	.1366	.9757
516	.5221	.9416	.3611	.7806	.2002	.6197	.0392	.4587	.8782	.2977	.7173	.1368	.9758
519	.5222	.9417	.3612	.7808	.2003	.6198	.0393	.4588	.8784	.2979	.7174	.1369	.9760
522	.5223	.9418	.3614	.7809	.2004	.6199	.0394	.4590	.8785	.2980	.7175	.1371	.9761
419525	15.5224	15.9420	16.3615	16.7810	17.2005	17.6201	18.0396	18.4591	18.8786	19.2982	19.7177	20.1372	20.9763
528	.5225	.9421	.3616	.7811	.2006	.6202	.0397	.4592	.8788	.2983	.7178	.1373	.9764
531	.5226	.9422	.3617	.7812	.2008	.6203	.0398	.4594	.8789	.2984	.7180	.1375	.9766
534	.5228	.9423	.3618	.7814	.2009	.6204	.0400	.4595	.8790	.2986	.7181	.1376	.9767
537	.5229	.9424	.3619	.7815	.2010	.6206	.0401	.4596	.8792	.2987	.7182	.1378	.9769
419540	15.5230	15.9425	16.3621	16.7816	17.2011	17.6207	18.0402	18.4598	18.8793	19.2988	19.7184	20.1379	20.9770
543	.5231	.9426	.3622	.7817	.2013	.6208	.0403	.4599	.8794	.2990	.7185	.1381	.9772
546	.5232	.9427	.3623	.7818	.2014	.6209	.0405	.4600	.8796	.2991	.7187	.1382	.9773
549	.5233	.9429	.3624	.7820	.2015	.6211	.0406	.4602	.8797	.2993	.7188	.1384	.9775
552	.5234	.9430	.3625	.7821	.2016	.6212	.0407	.4603	.8798	.2994	.7189	.1385	.9776
419555	15.5235	15.9431	16.3626	16.7822	17.2018	17.6213	18.0409	18.4604	18.8800	19.2995	19.7191	20.1386	20.9778
558	.5236	.9432	.3628	.7823	.2019	.6214	.0410	.4606	.8801	.2997	.7192	.1388	.9779
561	.5238	.9433	.3629	.7824	.2020	.6216	.0411	.4607	.8802	.2998	.7194	.1389	.9781
564	.5239	.9434	.3630	.7826	.2021	.6217	.0413	.4608	.8804	.2999	.7195	.1391	.9782
567	.5240	.9435	.3631	.7827	.2022	.6218	.0414	.4609	.8805	.3001	.7196	.1392	.9784
419570	15.5241	15.9437	16.3632	16.7828	17.2024	17.6219	18.0415	18.4611	18.8807	19.3002	19.7198	20.1394	20.9785
573	.5242	.9438	.3633	.7829	.2025	.6221	.0416	.4612	.8808	.3004	.7199	.1395	.9787
576	.5243	.9439	.3635	.7830	.2026	.6222	.0418	.4613	.8809	.3005	.7201	.1396	.9788
579	.5244	.9440	.3636	.7832	.2027	.6223	.0419	.4615	.8811	.3006	.7202	.1398	.9790
582	.5245	.9441	.3637	.7833	.2029	.6224	.0420	.4616	.8812	.3008	.7204	.1399	.9791
419585	15.5246	15.9442	16.3638	16.7834	17.2030	17.6226	18.0422	18.4617	18.8813	19.3009	19.7205	20.1401	20.9793
588	.5248	.9443	.3639	.7835	.2031	.6227	.0423	.4619	.8815	.3010	.7206	.1402	.9794
591	.5249	.9445	.3640	.7836	.2032	.6228	.0424	.4620	.8816	.3012	.7208	.1404	.9796
594	.5250	.9446	.3642	.7838	.2034	.6229	.0425	.4621	.8817	.3013	.7209	.1405	.9797
597	.5251	.9447	.3643	.7839	.2035	.6231	.0427	.4623	.8819	.3015	.7211	.1407	.9799
419600	15.5252	15.9448	16.3644	16.7840	17.2036	17.6232	18.0428	18.4624	18.8820	19.3016	19.7212	20.1408	20.9800

H A R M O N I C S

BASIC FREQ.	24	25	26	27	28	29	30	31	32	33	34	35	36
419600	10.0704	10.4900	10.9096	11.3292	11.7488	12.1684	12.5880	13.0076	13.4272	13.8468	14.2664	14.6860	15.1056
603	.0705	.4901	.9097	.3293	.7489	.1685	.5881	.0077	.4273	.8469	.2665	.6861	.1057
606	.0705	.4902	.9098	.3294	.7490	.1686	.5882	.0078	.4274	.8470	.2666	.6862	.1058
609	.0706	.4902	.9098	.3294	.7491	.1687	.5883	.0079	.4275	.8471	.2667	.6863	.1059
612	.0707	.4903	.9099	.3295	.7491	.1687	.5884	.0080	.4276	.8472	.2668	.6864	.1060
419615	10.0708	10.4904	10.9100	11.3296	11.7492	12.1688	12.5885	13.0081	13.4277	13.8473	14.2669	14.6865	15.1061
618	.0708	.4905	.9101	.3297	.7493	.1689	.5885	.0082	.4278	.8474	.2670	.6866	.1062
621	.0709	.4905	.9101	.3298	.7494	.1690	.5886	.0083	.4279	.8475	.2671	.6867	.1064
624	.0710	.4906	.9102	.3298	.7495	.1691	.5887	.0083	.4280	.8476	.2672	.6868	.1065
627	.0710	.4907	.9103	.3299	.7496	.1692	.5888	.0084	.4281	.8477	.2673	.6869	.1066
419630	10.0711	10.4908	10.9104	11.3300	11.7496	12.1693	12.5889	13.0085	13.4282	13.8478	14.2674	14.6871	15.1067
633	.0712	.4908	.9105	.3301	.7497	.1694	.5890	.0086	.4283	.8479	.2675	.6872	.1068
636	.0713	.4909	.9105	.3302	.7498	.1694	.5891	.0087	.4284	.8480	.2676	.6873	.1069
639	.0713	.4910	.9106	.3303	.7499	.1695	.5892	.0088	.4284	.8481	.2677	.6874	.1070
642	.0714	.4911	.9107	.3303	.7500	.1696	.5893	.0089	.4285	.8482	.2678	.6875	.1071
419645	10.0715	10.4911	10.9108	11.3304	11.7501	12.1697	12.5894	13.0090	13.4286	13.8483	14.2679	14.6876	15.1072
648	.0716	.4912	.9108	.3305	.7501	.1698	.5894	.0091	.4287	.8484	.2680	.6877	.1073
651	.0716	.4913	.9109	.3306	.7502	.1699	.5895	.0092	.4288	.8485	.2681	.6878	.1074
654	.0717	.4914	.9110	.3307	.7503	.1700	.5896	.0093	.4289	.8486	.2682	.6879	.1075
657	.0718	.4914	.9111	.3307	.7504	.1701	.5897	.0094	.4290	.8487	.2683	.6880	.1077
419660	10.0718	10.4915	10.9112	11.3308	11.7505	12.1701	12.5898	13.0095	13.4291	13.8488	14.2684	14.6881	15.1078
663	.0719	.4916	.9112	.3309	.7506	.1702	.5899	.0096	.4292	.8489	.2685	.6882	.1079
666	.0720	.4917	.9113	.3310	.7506	.1703	.5900	.0096	.4293	.8490	.2686	.6883	.1080
669	.0721	.4917	.9114	.3311	.7507	.1704	.5901	.0097	.4294	.8491	.2687	.6884	.1081
672	.0721	.4918	.9115	.3311	.7508	.1705	.5902	.0098	.4295	.8492	.2688	.6885	.1082
419675	10.0722	10.4919	10.9116	11.3312	11.7509	12.1706	12.5903	13.0099	13.4296	13.8493	14.2690	14.6886	15.1083
678	.0723	.4920	.9116	.3313	.7510	.1707	.5903	.0100	.4297	.8494	.2691	.6887	.1084
681	.0723	.4920	.9117	.3314	.7511	.1707	.5904	.0101	.4298	.8495	.2692	.6888	.1085
684	.0724	.4921	.9118	.3315	.7512	.1708	.5905	.0102	.4299	.8496	.2693	.6889	.1086
687	.0725	.4922	.9119	.3315	.7512	.1709	.5906	.0103	.4300	.8497	.2694	.6890	.1087
419690	10.0726	10.4923	10.9119	11.3316	11.7513	12.1710	12.5907	13.0104	13.4301	13.8498	14.2695	14.6892	15.1088
693	.0726	.4923	.9120	.3317	.7514	.1711	.5908	.0105	.4302	.8499	.2696	.6893	.1089
696	.0727	.4924	.9121	.3318	.7515	.1712	.5909	.0106	.4303	.8500	.2697	.6894	.1091
699	.0728	.4925	.9122	.3319	.7516	.1713	.5910	.0107	.4304	.8501	.2698	.6895	.1092
702	.0728	.4926	.9123	.3320	.7517	.1714	.5911	.0108	.4305	.8502	.2699	.6896	.1093
419705	10.0729	10.4926	10.9123	11.3320	11.7517	12.1714	12.5912	13.0109	13.4306	13.8503	14.2700	14.6897	15.1094
708	.0730	.4927	.9124	.3321	.7518	.1715	.5912	.0109	.4307	.8504	.2701	.6898	.1095
711	.0731	.4928	.9125	.3322	.7519	.1716	.5913	.0110	.4308	.8505	.2702	.6899	.1096
714	.0731	.4929	.9126	.3323	.7520	.1717	.5914	.0111	.4308	.8506	.2703	.6900	.1097
717	.0732	.4929	.9126	.3324	.7521	.1718	.5915	.0112	.4309	.8507	.2704	.6901	.1098
419720	10.0733	10.4930	10.9127	11.3324	11.7522	12.1719	12.5916	13.0113	13.4310	13.8508	14.2705	14.6902	15.1099
723	.0734	.4931	.9128	.3325	.7522	.1720	.5917	.0114	.4311	.8509	.2706	.6903	.1100
726	.0734	.4932	.9129	.3326	.7523	.1721	.5918	.0115	.4312	.8510	.2707	.6904	.1101
729	.0735	.4932	.9130	.3327	.7524	.1721	.5919	.0116	.4313	.8511	.2708	.6905	.1102
732	.0736	.4933	.9130	.3328	.7525	.1722	.5920	.0117	.4314	.8512	.2709	.6906	.1104
419735	10.0736	10.4934	10.9131	11.3328	11.7526	12.1723	12.5921	13.0118	13.4315	13.8513	14.2710	14.6907	15.1105
738	.0737	.4935	.9132	.3329	.7527	.1724	.5921	.0119	.4316	.8514	.2711	.6908	.1106
741	.0738	.4935	.9133	.3330	.7527	.1725	.5922	.0120	.4317	.8515	.2712	.6909	.1107
744	.0739	.4936	.9133	.3331	.7528	.1726	.5923	.0121	.4318	.8516	.2713	.6910	.1108
747	.0739	.4937	.9134	.3332	.7529	.1727	.5924	.0122	.4319	.8517	.2714	.6911	.1109
419750	10.0740	10.4938	10.9135	11.3333	11.7530	12.1728	12.5925	13.0123	13.4320	13.8518	14.2715	14.6913	15.1110
753	.0741	.4938	.9136	.3333	.7531	.1728	.5926	.0123	.4321	.8518	.2716	.6914	.1111
756	.0741	.4939	.9137	.3334	.7532	.1729	.5927	.0124	.4322	.8519	.2717	.6915	.1112
759	.0742	.4940	.9137	.3335	.7533	.1730	.5928	.0125	.4323	.8520	.2718	.6916	.1113
762	.0743	.4941	.9138	.3336	.7533	.1731	.5929	.0126	.4324	.8521	.2719	.6917	.1114
419765	10.0744	10.4941	10.9139	11.3337	11.7534	12.1732	12.5930	13.0127	13.4325	13.8522	14.2720	14.6918	15.1115
768	.0744	.4942	.9140	.3337	.7535	.1733	.5930	.0128	.4326	.8523	.2721	.6919	.1116
771	.0745	.4943	.9140	.3338	.7536	.1734	.5931	.0129	.4327	.8524	.2722	.6920	.1118
774	.0746	.4944	.9141	.3339	.7537	.1734	.5932	.0130	.4328	.8525	.2723	.6921	.1119
777	.0746	.4944	.9142	.3340	.7538	.1735	.5933	.0131	.4329	.8526	.2724	.6922	.1120
419780	10.0747	10.4945	10.9143	11.3341	11.7538	12.1736	12.5934	13.0132	13.4330	13.8527	14.2725	14.6923	15.1121
783	.0748	.4946	.9144	.3341	.7539	.1737	.5935	.0133	.4331	.8528	.2726	.6924	.1122
786	.0749	.4947	.9144	.3342	.7540	.1738	.5936	.0134	.4332	.8529	.2727	.6925	.1123
789	.0749	.4947	.9145	.3343	.7541	.1739	.5937	.0135	.4332	.8530	.2728	.6926	.1124
792	.0750	.4948	.9146	.3344	.7542	.1740	.5938	.0136	.4333	.8531	.2729	.6927	.1125
419795	10.0751	10.4949	10.9147	11.3345	11.7543	12.1741	12.5939	13.0136	13.4334	13.8532	14.2730	14.6928	15.1126
798	.0752	.4950	.9147	.3345	.7543	.1741	.5939	.0137	.4335	.8533	.2731	.6929	.1127
801	.0752	.4950	.9148	.3346	.7544	.1742	.5940	.0138	.4336	.8534	.2732	.6930	.1128
804	.0753	.4951	.9149	.3347	.7545	.1743	.5941	.0139	.4337	.8535	.2733	.6931	.1129
807	.0754	.4952	.9150	.3348	.7546	.1744	.5942	.0140	.4338	.8536	.2734	.6932	.1131
419810	10.0754	10.4953	10.9151	11.3349	11.7547	12.1745	12.5943	13.0141	13.4339	13.8537	14.2735	14.6934	15.1132
813	.0755	.4953	.9151	.3350	.7548	.1746	.5944	.0142	.4340	.8538	.2736	.6935	.1133
816	.0756	.4954	.9152	.3350	.7548	.1747	.5945	.0143	.4341	.8539	.2737	.6936	.1134
819	.0757	.4955	.9153	.3351	.7549	.1748	.5946	.0144	.4342	.8540	.2738	.6937	.1135
822	.0757	.4956	.9154	.3352	.7550	.1748	.5947	.0145	.4343	.8541	.2739	.6938	.1136
419825	10.0758	10.4956	10.9155	11.3353	11.7551	12.1749	12.5948	13.0146	13.4344	13.8542	14.2741	14.6939	15.1137
828	.0759	.4957	.9155	.3354	.7552	.1750	.5948	.0147	.4345	.8543	.2742	.6940	.1138
831	.0759	.4958	.9156	.3354	.7553	.1751	.5949	.0148	.4346	.8544	.2743	.6941	.1139
834	.0760	.4959	.9157	.3355	.7554	.1752	.5950	.0149	.4347	.8545	.2744	.6942	.1140
837	.0761	.4959	.9158	.3356	.7554	.1753	.5951	.0149	.4348	.8546	.2745	.6943	.1141
419840	10.0762	10.4960	10.9158	11.3357	11.7555	12.1754	12.5952	13.0150	13.4349	13.8547	14.2746	14.6944	15.1142
843	.0762	.4961	.9159	.3358	.7556	.1754	.5953	.0151	.4350	.8548	.2747	.6945	.1143
846	.0763	.4962	.9160	.3358	.7557	.1755	.5954	.0152	.4351	.8549	.2748	.6946	.1145
849	.0764	.4962	.9161	.3359	.7558	.1756	.5955	.0153	.4352	.8550	.2749	.6947	.1146
852	.0764	.4963	.9162	.3360	.7559	.1757	.5956	.0154	.4353	.8551	.2750	.6948	.1147
419855	10.0765	10.4964	10.9162	11.3361	11.7559	12.1758	12.5957	13.0155	13.4354	13.8552	14.2751	14.6949	15.1148
858	.0766	.4965	.9163	.3362	.7560	.1759	.5957	.0156	.4355	.8553	.2752	.6950	.1149
861	.0767	.4965	.9164	.3362	.7561	.1760	.5958	.0157	.4356	.8554	.2753	.6951	.1150
864	.0767	.4966	.9165	.3363	.7562	.1761	.5959	.0158	.4356	.8555	.2754	.6952	.1151
867	.0768	.4967	.9165	.3364	.7563	.1761	.5960	.0159	.4357	.8556	.2755	.6953	.1152
419870	10.0769	10.4968	10.9166	11.3365	11.7564	12.1762	12.5961	13.0160	13.4358	13.8557	14.2756	14.6955	15.1153
873	.0770	.4968	.9167	.3366	.7564	.1763	.5962	.0161	.4359	.8558	.2757	.6956	.1154
876	.0770	.4969	.9168	.3367	.7565	.1764	.5963	.0162	.4360	.8559	.2758	.6957	.1155
879	.0771	.4970	.9169	.3367	.7566	.1765	.5964	.0162	.4361	.8560	.2759	.6958	.1156
882	.0772	.4971	.9169	.3368	.7567	.1766	.5965	.0163	.4362	.8561	.2760	.6959	.1158
419885	10.0772	10.4971	10.9170	11.3369	11.7568	12.1767	12.5966	13.0164	13.4363	13.8562	14.2761	14.6960	15.1159
888	.0773	.4972	.9171	.3370	.7569	.1768	.5966	.0165	.4364	.8563	.2762	.6961	.1160
891	.0774	.4973	.9172	.3371	.7569	.1768	.5967	.0166	.4365	.8564	.2763	.6962	.1161
894	.0775	.4974	.9172	.3371	.7570	.1769	.5968	.0167	.4366	.8565	.2764	.6963	.1162
897	.0775	.4974	.9173	.3372	.7571	.1770	.5969	.0168	.4367	.8566	.2765	.6964	.1163
419900	10.0776	10.4975	10.9174	11.3373	11.7572	12.1771	12.5970	13.0169	13.4368	13.8567	14.2766	14.6965	15.1164

MEGACYCLES PER SECOND

H A R M O N I C S

BASIC FREQ.	37	38	39	40	41	42	43	44	45	46	47	48	50
419600	15.5252	15.9448	16.3644	16.7840	17.2036	17.6232	18.0428	18.4624	18.8820	19.3016	19.7212	20.1408	20.9800
603	.5253	.9449	.3645	.7841	.2037	.6233	.0429	.4625	.8821	.3017	.7213	.1409	.9802
606	.5254	.9450	.3646	.7842	.2038	.6235	.0431	.4627	.8823	.3019	.7215	.1411	.9803
609	.5255	.9451	.3648	.7844	.2040	.6236	.0432	.4628	.8824	.3020	.7216	.1412	.9805
612	.5256	.9453	.3649	.7845	.2041	.6237	.0433	.4629	.8825	.3022	.7218	.1414	.9806
419615	15.5258	15.9454	16.3650	16.7846	17.2042	17.6238	18.0434	18.4631	18.8827	19.3023	19.7219	20.1415	20.9808
618	.5259	.9455	.3651	.7847	.2043	.6240	.0436	.4632	.8828	.3024	.7220	.1417	.9809
621	.5260	.9456	.3652	.7848	.2045	.6241	.0437	.4633	.8829	.3026	.7222	.1418	.9811
624	.5261	.9457	.3653	.7850	.2046	.6242	.0438	.4635	.8831	.3027	.7223	.1420	.9812
627	.5262	.9458	.3655	.7851	.2047	.6243	.0440	.4636	.8832	.3028	.7225	.1421	.9814
419630	15.5263	15.9459	16.3656	16.7852	17.2048	17.6245	18.0441	18.4637	18.8834	19.3030	19.7226	20.1422	20.9815
633	.5264	.9461	.3657	.7853	.2050	.6246	.0442	.4639	.8835	.3031	.7228	.1424	.9817
636	.5265	.9462	.3658	.7854	.2051	.6247	.0443	.4640	.8836	.3033	.7229	.1425	.9818
639	.5266	.9463	.3659	.7856	.2052	.6248	.0445	.4641	.8838	.3034	.7230	.1427	.9820
642	.5268	.9464	.3660	.7857	.2053	.6250	.0446	.4642	.8839	.3035	.7232	.1428	.9821
419645	15.5269	15.9465	16.3662	16.7858	17.2054	17.6251	18.0447	18.4644	18.8840	19.3037	19.7233	20.1430	20.9823
648	.5270	.9466	.3663	.7859	.2056	.6252	.0449	.4645	.8842	.3038	.7235	.1431	.9824
651	.5271	.9467	.3664	.7860	.2057	.6253	.0450	.4646	.8843	.3039	.7236	.1432	.9826
654	.5272	.9469	.3665	.7862	.2058	.6255	.0451	.4648	.8844	.3041	.7237	.1434	.9827
657	.5273	.9470	.3666	.7863	.2059	.6256	.0453	.4649	.8846	.3042	.7239	.1435	.9829
419660	15.5274	15.9471	16.3667	16.7864	17.2061	17.6257	18.0454	18.4650	18.8847	19.3044	19.7240	20.1437	20.9830
663	.5275	.9472	.3669	.7865	.2062	.6258	.0455	.4652	.8848	.3045	.7242	.1438	.9832
666	.5276	.9473	.3670	.7866	.2063	.6260	.0456	.4653	.8850	.3046	.7243	.1440	.9833
669	.5278	.9474	.3671	.7868	.2064	.6261	.0458	.4654	.8851	.3048	.7244	.1441	.9835
672	.5279	.9475	.3672	.7869	.2066	.6262	.0459	.4656	.8852	.3049	.7246	.1443	.9836
419675	15.5280	15.9477	16.3673	16.7870	17.2067	17.6264	18.0460	18.4657	18.8854	19.3051	19.7247	20.1444	20.9838
678	.5281	.9478	.3674	.7871	.2068	.6265	.0462	.4658	.8855	.3052	.7249	.1445	.9839
681	.5282	.9479	.3676	.7872	.2069	.6266	.0463	.4660	.8856	.3053	.7250	.1447	.9841
684	.5283	.9480	.3677	.7874	.2070	.6267	.0464	.4661	.8858	.3055	.7251	.1448	.9842
687	.5284	.9481	.3678	.7875	.2072	.6269	.0465	.4662	.8859	.3056	.7253	.1450	.9844
419690	15.5285	15.9482	16.3679	16.7876	17.2073	17.6270	18.0467	18.4664	18.8861	19.3057	19.7254	20.1451	20.9845
693	.5286	.9483	.3680	.7877	.2074	.6271	.0468	.4665	.8862	.3059	.7256	.1453	.9847
696	.5288	.9484	.3681	.7878	.2075	.6272	.0469	.4666	.8863	.3060	.7257	.1454	.9848
699	.5289	.9486	.3683	.7880	.2077	.6274	.0471	.4668	.8865	.3062	.7259	.1456	.9850
702	.5290	.9487	.3684	.7881	.2078	.6275	.0472	.4669	.8866	.3063	.7260	.1457	.9851
419705	15.5291	15.9488	16.3685	16.7882	17.2079	17.6276	18.0473	18.4670	18.8867	19.3064	19.7261	20.1458	20.9853
708	.5292	.9489	.3686	.7883	.2080	.6277	.0474	.4672	.8869	.3066	.7263	.1460	.9854
711	.5293	.9490	.3687	.7884	.2082	.6279	.0476	.4673	.8870	.3067	.7264	.1461	.9856
714	.5294	.9491	.3688	.7886	.2083	.6280	.0477	.4674	.8871	.3068	.7266	.1463	.9857
717	.5295	.9492	.3690	.7887	.2084	.6281	.0478	.4675	.8873	.3070	.7267	.1464	.9859
419720	15.5296	15.9494	16.3691	16.7888	17.2085	17.6282	18.0480	18.4677	18.8874	19.3071	19.7268	20.1466	20.9860
723	.5298	.9495	.3692	.7889	.2086	.6284	.0481	.4678	.8875	.3073	.7270	.1467	.9862
726	.5299	.9496	.3693	.7890	.2088	.6285	.0482	.4679	.8877	.3074	.7271	.1468	.9863
729	.5300	.9497	.3694	.7892	.2089	.6286	.0483	.4681	.8878	.3075	.7273	.1470	.9865
732	.5301	.9498	.3695	.7893	.2090	.6287	.0485	.4682	.8879	.3077	.7274	.1471	.9866
419735	15.5302	15.9499	16.3697	16.7894	17.2091	17.6289	18.0486	18.4683	18.8881	19.3078	19.7275	20.1473	20.9868
738	.5303	.9500	.3698	.7895	.2093	.6290	.0487	.4685	.8882	.3079	.7277	.1474	.9869
741	.5304	.9502	.3699	.7896	.2094	.6291	.0489	.4686	.8883	.3081	.7278	.1476	.9871
744	.5305	.9503	.3700	.7898	.2095	.6292	.0490	.4687	.8885	.3082	.7280	.1477	.9872
747	.5306	.9504	.3701	.7899	.2096	.6294	.0491	.4689	.8886	.3084	.7281	.1479	.9874
419750	15.5308	15.9505	16.3703	16.7900	17.2098	17.6295	18.0493	18.4690	18.8888	19.3085	19.7283	20.1480	20.9875
753	.5309	.9506	.3704	.7901	.2099	.6296	.0494	.4691	.8889	.3086	.7284	.1481	.9877
756	.5310	.9507	.3705	.7902	.2100	.6298	.0495	.4693	.8890	.3088	.7285	.1483	.9878
759	.5311	.9508	.3706	.7904	.2101	.6299	.0496	.4694	.8892	.3089	.7287	.1484	.9880
762	.5312	.9510	.3707	.7905	.2102	.6300	.0498	.4695	.8893	.3091	.7288	.1486	.9881
419765	15.5313	15.9511	16.3708	16.7906	17.2104	17.6301	18.0499	18.4697	18.8894	19.3092	19.7290	20.1487	20.9883
768	.5314	.9512	.3710	.7907	.2105	.6303	.0500	.4698	.8896	.3093	.7291	.1489	.9884
771	.5315	.9513	.3711	.7908	.2106	.6304	.0502	.4699	.8897	.3095	.7292	.1490	.9886
774	.5316	.9514	.3712	.7910	.2107	.6305	.0503	.4701	.8898	.3096	.7294	.1492	.9887
777	.5317	.9515	.3713	.7911	.2109	.6306	.0504	.4702	.8900	.3097	.7295	.1493	.9889
419780	15.5319	15.9516	16.3714	16.7912	17.2110	17.6308	18.0505	18.4703	18.8901	19.3099	19.7297	20.1494	20.9890
783	.5320	.9518	.3715	.7913	.2111	.6309	.0507	.4705	.8902	.3100	.7298	.1496	.9892
786	.5321	.9519	.3717	.7914	.2112	.6310	.0508	.4706	.8904	.3102	.7299	.1497	.9893
789	.5322	.9520	.3718	.7916	.2113	.6311	.0509	.4707	.8905	.3103	.7301	.1499	.9895
792	.5323	.9521	.3719	.7917	.2115	.6313	.0511	.4708	.8906	.3104	.7302	.1500	.9896
419795	15.5324	15.9522	16.3720	16.7918	17.2116	17.6314	18.0512	18.4710	18.8908	19.3106	19.7304	20.1502	20.9898
798	.6325	.9523	.3721	.7919	.2117	.6315	.0513	.4711	.8909	.3107	.7305	.1503	.9899
801	.5326	.9524	.3722	.7920	.2118	.6316	.0514	.4712	.8910	.3108	.7306	.1504	.9901
804	.5327	.9526	.3724	.7922	.2120	.6318	.0516	.4714	.8912	.3110	.7308	.1506	.9902
807	.5329	.9527	.3725	.7923	.2121	.6319	.0517	.4715	.8913	.3111	.7309	.1507	.9904
419810	15.5330	15.9528	16.3726	16.7924	17.2122	17.6320	18.0518	18.4716	18.8915	19.3113	19.7311	20.1509	20.9905
813	.5331	.9529	.3727	.7925	.2123	.6321	.0520	.4718	.8916	.3114	.7312	.1510	.9907
816	.5332	.9530	.3728	.7926	.2125	.6323	.0521	.4719	.8917	.3115	.7314	.1512	.9908
819	.5333	.9531	.3729	.7928	.2126	.6324	.0522	.4720	.8919	.3117	.7315	.1513	.9910
822	.5334	.9532	.3731	.7929	.2127	.6325	.0523	.4722	.8920	.3118	.7316	.1515	.9911
419825	15.5335	15.9534	16.3732	16.7930	17.2128	17.6327	18.0525	18.4723	18.8921	19.3120	19.7318	20.1516	20.9913
828	.5336	.9535	.3733	.7931	.2129	.6328	.0526	.4724	.8923	.3121	.7319	.1517	.9914
831	.5337	.9536	.3734	.7932	.2131	.6329	.0527	.4726	.8924	.3122	.7321	.1519	.9916
834	.5339	.9537	.3735	.7934	.2132	.6330	.0529	.4727	.8925	.3124	.7322	.1520	.9917
837	.5340	.9538	.3736	.7935	.2133	.6332	.0530	.4728	.8927	.3125	.7323	.1522	.9919
419840	15.5341	15.9539	16.3738	16.7936	17.2134	17.6333	18.0531	18.4730	18.8928	19.3126	19.7325	20.1523	20.9920
843	.5342	.9540	.3739	.7937	.2136	.6334	.0532	.4731	.8929	.3128	.7326	.1525	.9922
846	.5343	.9541	.3740	.7938	.2137	.6335	.0534	.4732	.8931	.3129	.7328	.1526	.9923
849	.5344	.9543	.3741	.7940	.2138	.6337	.0535	.4734	.8932	.3131	.7329	.1528	.9925
852	.5345	.9544	.3742	.7941	.2139	.6338	.0536	.4735	.8933	.3132	.7330	.1529	.9926
419855	15.5346	15.9545	16.3743	16.7942	17.2141	17.6339	18.0538	18.4736	18.8935	19.3133	19.7332	20.1530	20.9928
858	.5347	.9546	.3745	.7943	.2142	.6340	.0539	.4738	.8936	.3135	.7333	.1532	.9929
861	.5349	.9547	.3746	.7944	.2143	.6342	.0540	.4739	.8937	.3136	.7335	.1533	.9931
864	.5350	.9548	.3747	.7946	.2144	.6343	.0542	.4740	.8939	.3137	.7336	.1535	.9932
867	.5351	.9549	.3748	.7947	.2145	.6344	.0543	.4741	.8940	.3139	.7337	.1536	.9934
419870	15.5352	15.9551	16.3749	16.7948	17.2147	17.6345	18.0544	18.4743	18.8942	19.3140	19.7339	20.1538	20.9935
873	.5353	.9552	.3750	.7949	.2148	.6347	.0545	.4744	.8943	.3142	.7340	.1539	.9937
876	.5354	.9553	.3752	.7950	.2149	.6348	.0547	.4745	.8944	.3143	.7342	.1540	.9938
879	.5355	.9554	.3753	.7952	.2150	.6349	.0548	.4747	.8946	.3144	.7343	.1542	.9940
882	.5356	.9555	.3754	.7953	.2152	.6350	.0549	.4748	.8947	.3146	.7345	.1543	.9941
419885	15.5357	15.9556	16.3755	16.7954	17.2153	17.6352	18.0551	18.4749	18.8948	19.3147	19.7346	20.1545	20.9943
888	.5359	.9557	.3756	.7955	.2154	.6353	.0552	.4751	.8950	.3148	.7347	.1546	.9944
891	.5360	.9559	.3757	.7956	.2155	.6354	.0553	.4752	.8951	.3150	.7349	.1548	.9946
894	.5361	.9560	.3759	.7958	.2157	.6355	.0554	.4753	.8952	.3151	.7350	.1549	.9947
897	.5362	.9561	.3760	.7959	.2158	.6357	.0556	.4755	.8954	.3153	.7352	.1551	.9949
419900	15.5363	15.9562	16.3761	16.7960	17.2159	17.6358	18.0557	18.4756	18.8955	19.3154	19.7353	20.1552	20.9950

R

MEGACYCLES PER SECOND

H A R M O N I C S

BASIC FREQ.	24	25	26	27	28	29	30	31	32	33	34	35	36
419900	10.0776	10.4975	10.9174	11.3373	11.7572	12.1771	12.5970	13.0169	13.4368	13.8567	14.2766	14.6965	15.1164
903	.0777	.4976	.9175	.3374	.7573	.1772	.5971	.0170	.4369	.8568	.2767	.6966	.1165
906	.0777	.4977	.9176	.3375	.7574	.1773	.5972	.0171	.4370	.8569	.2768	.6967	.1166
909	.0778	.4977	.9176	.3375	.7575	.1774	.5973	.0172	.4371	.8570	.2769	.6968	.1167
912	.0779	.4978	.9177	.3376	.7575	.1774	.5974	.0173	.4372	.8571	.2770	.6969	.1168
419915	10.0780	10.4979	10.9178	11.3377	11.7576	12.1775	12.5975	13.0174	13.4373	13.8572	14.2771	14.6970	15.1169
918	.0780	.4980	.9179	.3378	.7577	.1776	.5975	.0175	.4374	.8573	.2772	.6971	.1170
921	.0781	.4980	.9179	.3379	.7578	.1777	.5976	.0176	.4375	.8574	.2773	.6972	.1172
924	.0782	.4981	.9180	.3379	.7579	.1778	.5977	.0176	.4376	.8575	.2774	.6973	.1173
927	.0782	.4982	.9181	.3380	.7580	.1779	.5978	.0177	.4377	.8576	.2775	.6974	.1174
419930	10.0783	10.4983	10.9182	11.3381	11.7580	12.1780	12.5979	13.0178	13.4378	13.8577	14.2776	14.6976	15.1175
933	.0784	.4983	.9183	.3382	.7581	.1781	.5980	.0179	.4379	.8578	.2777	.6977	.1176
936	.0785	.4984	.9183	.3383	.7582	.1781	.5981	.0180	.4380	.8579	.2778	.6978	.1177
939	.0785	.4985	.9184	.3384	.7583	.1782	.5982	.0181	.4380	.8580	.2779	.6979	.1178
942	.0786	.4986	.9185	.3384	.7584	.1783	.5983	.0182	.4381	.8581	.2780	.6980	.1179
419945	10.0787	10.4986	10.9186	11.3385	11.7585	12.1784	12.5984	13.0183	13.4382	13.8582	14.2781	14.6981	15.1180
948	.0788	.4987	.9186	.3386	.7585	.1785	.5984	.0184	.4383	.8583	.2782	.6982	.1181
951	.0788	.4988	.9187	.3387	.7586	.1786	.5985	.0185	.4384	.8584	.2783	.6983	.1182
954	.0789	.4989	.9188	.3388	.7587	.1787	.5986	.0186	.4385	.8585	.2784	.6984	.1183
957	.0790	.4989	.9189	.3388	.7588	.1788	.5987	.0187	.4386	.8586	.2785	.6985	.1185
419960	10.0790	10.4990	10.9190	11.3389	11.7589	12.1788	12.5988	13.0188	13.4387	13.8587	14.2786	14.6986	15.1186
963	.0791	.4991	.9190	.3390	.7590	.1789	.5989	.0189	.4388	.8588	.2787	.6987	.1187
966	.0792	.4992	.9191	.3391	.7590	.1790	.5990	.0189	.4389	.8589	.2788	.6988	.1188
969	.0793	.4992	.9192	.3392	.7591	.1791	.5991	.0190	.4390	.8590	.2789	.6989	.1189
972	.0793	.4993	.9193	.3392	.7592	.1792	.5992	.0191	.4391	.8591	.2790	.6990	.1190
419975	10.0794	10.4994	10.9194	11.3393	11.7593	12.1793	12.5993	13.0192	13.4392	13.8592	14.2792	14.6991	15.1191
978	.0795	.4995	.9194	.3394	.7594	.1794	.5993	.0193	.4393	.8593	.2793	.6992	.1192
981	.0795	.4995	.9195	.3395	.7595	.1794	.5994	.0194	.4394	.8594	.2794	.6993	.1193
984	.0796	.4996	.9196	.3396	.7596	.1795	.5995	.0195	.4395	.8595	.2795	.6994	.1194
987	.0797	.4997	.9197	.3396	.7596	.1796	.5996	.0196	.4396	.8596	.2796	.6995	.1195
419990	10.0798	10.4998	10.9197	11.3397	11.7597	12.1797	12.5997	13.0197	13.4397	13.8597	14.2797	14.6997	15.1196
993	.0798	.4998	.9198	.3398	.7598	.1798	.5998	.0198	.4398	.8598	.2798	.6998	.1197
996	.0799	.4999	.9199	.3399	.7599	.1799	.5999	.0199	.4399	.8599	.2799	.6999	.1199
999	.0800	.5000	.9200	.3400	.7600	.1800	.6000	.0200	.4400	.8600	.2800	.7000	.1200
420002	.0800	.5001	.9201	.3401	.7601	.1801	.6001	.0201	.4401	.8601	.2801	.7001	.1201
420005	10.0801	10.5001	10.9201	11.3401	11.7601	12.1801	12.6002	13.0202	13.4402	13.8602	14.2802	14.7002	15.1202
008	.0802	.5002	.9202	.3402	.7602	.1902	.6002	.0202	.4403	.8603	.2803	.7003	.1203
011	.0803	.5003	.9203	.3403	.7603	.1803	.6003	.0203	.4404	.8604	.2804	.7004	.1204
014	.0803	.5004	.9204	.3404	.7604	.1804	.6004	.0204	.4404	.8605	.2805	.7005	.1205
017	.0804	.5004	.9204	.3405	.7605	.1805	.6005	.0205	.4405	.8606	.2806	.7006	.1206
420020	10.0805	10.5005	10.9205	11.3405	11.7606	12.1806	12.6006	13.0206	13.4406	13.8607	14.2807	14.7007	15.1207
023	.0806	.5006	.9206	.3406	.7606	.1807	.6007	.0207	.4407	.8608	.2808	.7008	.1208
026	.0806	.5007	.9207	.3407	.7607	.1808	.6008	.0208	.4408	.8609	.2809	.7009	.1209
029	.0807	.5007	.9208	.3408	.7608	.1808	.6009	.0209	.4409	.8610	.2810	.7010	.1210
032	.0808	.5008	.9208	.3409	.7609	.1809	.6010	.0210	.4410	.8611	.2811	.7011	.1212
420035	10.0808	10.5009	10.9209	11.3409	11.7610	12.1810	12.6011	13.0211	13.4411	13.8612	14.2812	14.7012	15.1213
038	.0809	.5010	.9210	.3410	.7611	.1811	.6011	.0212	.4412	.8613	.2813	.7013	.1214
041	.0810	.5010	.9211	.3411	.7611	.1812	.6012	.0213	.4413	.8614	.2814	.7014	.1215
044	.0811	.5011	.9211	.3412	.7612	.1813	.6013	.0214	.4414	.8615	.2815	.7015	.1216
047	.0811	.5012	.9212	.3413	.7613	.1814	.6014	.0215	.4415	.8616	.2816	.7016	.1217
420050	10.0812	10.5013	10.9213	11.3414	11.7614	12.1815	12.6015	13.0216	13.4416	13.8617	14.2817	14.7018	15.1218
053	.0813	.5013	.9214	.3414	.7615	.1815	.6016	.0216	.4417	.8617	.2818	.7019	.1219
056	.0813	.5014	.9215	.3415	.7616	.1816	.6017	.0217	.4418	.8618	.2819	.7020	.1220
059	.0814	.5015	.9215	.3416	.7617	.1817	.6018	.0218	.4419	.8619	.2820	.7021	.1221
062	.0815	.5016	.9216	.3417	.7617	.1818	.6019	.0219	.4420	.8620	.2821	.7022	.1222
420065	10.0816	10.5016	10.9217	11.3418	11.7618	12.1819	12.6020	13.0220	13.4421	13.8621	14.2822	14.7023	15.1223
068	.0816	.5017	.9218	.3418	.7619	.1820	.6020	.0221	.4422	.8622	.2823	.7024	.1224
071	.0817	.5018	.9218	.3419	.7620	.1821	.6021	.0222	.4423	.8623	.2824	.7025	.1226
074	.0818	.5019	.9219	.3420	.7621	.1821	.6022	.0223	.4424	.8624	.2825	.7026	.1227
077	.0818	.5019	.9220	.3421	.7622	.1822	.6023	.0224	.4425	.8625	.2826	.7027	.1228
420080	10.0819	10.5020	10.9221	11.3422	11.7622	12.1823	12.6024	13.0225	13.4426	13.8626	14.2827	14.7028	15.1229
083	.0820	.5021	.9222	.3422	.7623	.1824	.6025	.0226	.4427	.8627	.2828	.7029	.1230
086	.0821	.5022	.9222	.3423	.7624	.1825	.6026	.0227	.4428	.8628	.2829	.7030	.1231
089	.0821	.5022	.9223	.3424	.7625	.1826	.6027	.0228	.4428	.8629	.2830	.7031	.1232
092	.0822	.5023	.9224	.3425	.7626	.1827	.6028	.0229	.4429	.8630	.2831	.7032	.1233
420095	10.0823	10.5024	10.9225	11.3426	11.7627	12.1828	12.6029	13.0229	13.4430	13.8631	14.2832	14.7033	15.1234
098	.0824	.5025	.9225	.3426	.7627	.1828	.6029	.0230	.4431	.8632	.2833	.7034	.1235
101	.0824	.5025	.9226	.3427	.7628	.1829	.6030	.0231	.4432	.8633	.2834	.7035	.1236
104	.0825	.5026	.9227	.3428	.7629	.1830	.6031	.0232	.4433	.8634	.2835	.7036	.1237
107	.0826	.5027	.9228	.3429	.7630	.1831	.6032	.0233	.4434	.8635	.2836	.7037	.1239
420110	10.0826	10.5028	10.9229	11.3430	11.7631	12.1832	12.6033	13.0234	13.4435	13.8636	14.2837	14.7039	15.1240
113	.0827	.5028	.9229	.3431	.7632	.1833	.6034	.0235	.4436	.8637	.2838	.7040	.1241
116	.0828	.5029	.9230	.3431	.7632	.1834	.6035	.0236	.4437	.8638	.2839	.7041	.1242
119	.0829	.5030	.9231	.3432	.7633	.1835	.6036	.0237	.4438	.8639	.2840	.7042	.1243
122	.0829	.5031	.9232	.3433	.7634	.1835	.6037	.0238	.4439	.8640	.2841	.7043	.1244
420125	10.0830	10.5031	10.9233	11.3434	11.7635	12.1836	12.6038	13.0239	13.4440	13.8641	14.2843	14.7044	15.1245
128	.0831	.5032	.9233	.3435	.7636	.1837	.6038	.0240	.4441	.8642	.2844	.7045	.1246
131	.0831	.5033	.9234	.3435	.7637	.1838	.6039	.0241	.4442	.8643	.2845	.7046	.1247
134	.0832	.5034	.9235	.3436	.7638	.1839	.6040	.0242	.4443	.8644	.2846	.7047	.1248
137	.0833	.5034	.9236	.3437	.7638	.1840	.6041	.0242	.4444	.8645	.2847	.7048	.1249
420140	10.0834	10.5035	10.9236	11.3438	11.7639	12.1841	12.6042	13.0243	13.4445	13.8646	14.2848	14.7049	15.1250
143	.0834	.5036	.9237	.3439	.7640	.1841	.6043	.0244	.4446	.8647	.2849	.7050	.1251
146	.0835	.5037	.9238	.3439	.7641	.1842	.6044	.0245	.4447	.8648	.2850	.7051	.1253
149	.0836	.5037	.9239	.3440	.7642	.1843	.6045	.0246	.4448	.8649	.2851	.7052	.1254
152	.0836	.5038	.9240	.3441	.7643	.1844	.6046	.0247	.4449	.8650	.2852	.7053	.1255
420155	10.0837	10.5039	10.9240	11.3442	11.7643	12.1845	12.6047	13.0248	13.4450	13.8651	14.2853	14.7054	15.1256
158	.0838	.5040	.9241	.3443	.7644	.1846	.6047	.0249	.4451	.8652	.2854	.7055	.1257
161	.0839	.5040	.9242	.3443	.7645	.1847	.6048	.0250	.4452	.8653	.2855	.7056	.1258
164	.0839	.5041	.9243	.3444	.7646	.1848	.6049	.0251	.4452	.8654	.2856	.7057	.1259
167	.0840	.5042	.9243	.3445	.7647	.1848	.6050	.0252	.4453	.8655	.2857	.7058	.1260
420170	10.0841	10.5043	10.9244	11.3446	11.7648	12.1849	12.6051	13.0253	13.4454	13.8656	14.2858	14.7060	15.1261
173	.0842	.5043	.9245	.3447	.7648	.1850	.6052	.0254	.4455	.8657	.2859	.7061	.1262
176	.0842	.5044	.9246	.3448	.7649	.1851	.6053	.0255	.4456	.8658	.2860	.7062	.1263
179	.0843	.5045	.9247	.3448	.7650	.1852	.6054	.0255	.4457	.8659	.2861	.7063	.1264
182	.0844	.5046	.9247	.3449	.7651	.1853	.6055	.0256	.4458	.8660	.2862	.7064	.1266
420185	10.0844	10.5046	10.9248	11.3450	11.7652	12.1854	12.6056	13.0257	13.4459	13.8661	14.2863	14.7065	15.1267
188	.0845	.5047	.9249	.3451	.7653	.1855	.6056	.0258	.4460	.8662	.2864	.7066	.1268
191	.0846	.5048	.9250	.3452	.7653	.1855	.6057	.0259	.4461	.8663	.2865	.7067	.1269
194	.0847	.5049	.9250	.3452	.7654	.1856	.6058	.0260	.4462	.8664	.2866	.7068	.1270
197	.0847	.5049	.9251	.3453	.7655	.1857	.6059	.0261	.4463	.8665	.2867	.7069	.1271
420200	10.0848	10.5050	10.9252	11.3454	11.7656	12.1858	12.6060	13.0262	13.4464	13.8666	14.2868	14.7070	15.1272

MEGACYCLES PER SECOND

BASIC FREQ.	37	38	39	40	41	42	43	44	45	46	47	48	50
419900	15.5363	15.9562	16.3761	16.7960	17.2159	17.6358	18.0557	18.4756	18.8955	19.3154	19.7353	20.1552	20.9950
903	.5364	.9563	.3762	.7961	.2160	.6359	.0558	.4757	.8956	.3155	.7354	.1553	.9952
906	.5365	.9564	.3763	.7962	.2161	.6361	.0560	.4759	.8958	.3157	.7356	.1555	.9953
909	.5366	.9565	.3765	.7964	.2163	.6362	.0561	.4760	.8959	.3158	.7357	.1556	.9955
912	.5367	.9567	.3766	.7965	.2164	.6363	.0562	.4761	.8960	.3160	.7359	.1558	.9956
419915	15.5369	15.9568	16.3767	16.7966	17.2165	17.6364	18.0563	18.4763	18.8962	19.3161	19.7360	20.1559	20.9958
918	.5370	.9569	.3768	.7967	.2166	.6366	.0565	.4764	.8963	.3162	.7361	.1561	.9959
921	.5371	.9570	.3769	.7968	.2168	.6367	.0566	.4765	.8964	.3164	.7363	.1562	.9961
924	.5372	.9571	.3770	.7970	.2169	.6368	.0567	.4767	.8966	.3165	.7364	.1564	.9962
927	.5373	.9572	.3772	.7971	.2170	.6369	.0569	.4768	.8967	.3166	.7366	.1565	.9964
419930	15.5374	15.9573	16.3773	16.7972	17.2171	17.6371	18.0570	18.4769	18.8969	19.3168	19.7367	20.1566	20.9965
933	.5375	.9575	.3774	.7973	.2173	.6372	.0571	.4771	.8970	.3169	.7369	.1568	.9967
936	.5376	.9576	.3775	.7974	.2174	.6373	.0572	.4772	.8971	.3171	.7370	.1569	.9968
939	.5377	.9577	.3776	.7976	.2175	.6374	.0574	.4773	.8973	.3172	.7371	.1571	.9970
942	.5379	.9578	.3777	.7977	.2176	.6376	.0575	.4774	.8974	.3173	.7373	.1572	.9971
419945	15.5380	15.9579	16.3779	16.7978	17.2177	17.6377	18.0576	18.4776	18.8975	19.3175	19.7374	20.1574	20.9973
948	.5381	.9580	.3780	.7979	.2179	.6378	.0578	.4777	.8977	.3176	.7376	.1575	.9974
951	.5382	.9581	.3781	.7980	.2180	.6379	.0579	.4778	.8978	.3177	.7377	.1576	.9976
954	.5383	.9583	.3782	.7982	.2181	.6381	.0580	.4780	.8979	.3179	.7378	.1578	.9977
957	.5384	.9584	.3783	.7983	.2182	.6382	.0582	.4781	.8981	.3180	.7380	.1579	.9979
419960	15.5385	15.9585	16.3784	16.7984	17.2184	17.6383	18.0583	18.4782	18.8982	19.3182	19.7381	20.1581	20.9980
963	.5386	.9586	.3786	.7985	.2185	.6384	.0584	.4784	.8983	.3183	.7383	.1582	.9982
966	.5387	.9587	.3787	.7986	.2186	.6386	.0585	.4785	.8985	.3184	.7384	.1584	.9983
969	.5389	.9588	.3788	.7988	.2187	.6387	.0587	.4786	.8986	.3186	.7385	.1585	.9985
972	.5390	.9589	.3789	.7989	.2189	.6388	.0588	.4788	.8987	.3187	.7387	.1587	.9986
419975	15.5391	15.9591	16.3790	16.7990	17.2190	17.6390	18.0589	18.4789	18.8989	19.3189	19.7388	20.1588	20.9988
978	.5392	.9592	.3791	.7991	.2191	.6391	.0591	.4790	.8990	.3190	.7390	.1589	.9989
981	.5393	.9593	.3793	.7992	.2192	.6392	.0592	.4792	.8991	.3191	.7391	.1591	.9991
984	.5394	.9594	.3794	.7994	.2193	.6393	.0593	.4793	.8993	.3193	.7392	.1592	.9992
987	.5395	.9595	.3795	.7995	.2195	.6395	.0594	.4794	.8994	.3194	.7394	.1594	.9994
419990	15.5396	15.9596	16.3796	16.7996	17.2196	17.6396	18.0596	18.4796	18.8996	19.3195	19.7395	20.1595	20.9995
993	.5397	.9597	.3797	.7997	.2197	.6397	.0597	.4797	.8997	.3197	.7397	.1597	.9997
996	.5399	.9598	.3798	.7998	.2198	.6398	.0598	.4798	.8998	.2198	.7398	.1598	.9998
999	.5400	.9600	.3800	.8000	.2200	.6400	.0600	.4800	.9000	.3200	.7400	.1600	21.0000
420002	.5401	.9601	.3801	.8001	.2201	.6401	.0601	.4801	.9001	.3201	.7401	.1601	.0001
420005	15.5402	15.9602	16.3802	16.8002	17.2202	17.6402	18.0602	18.4802	18.9002	19.3202	19.7402	20.1602	21.0003
008	.5403	.9603	.3803	.8003	.2203	.6403	.0603	.4804	.9004	.3204	.7404	.1604	.0004
011	.5404	.9604	.3804	.8004	.2205	.6405	.0605	.4805	.9005	.3205	.7405	.1605	.0006
014	.5405	.9605	.3805	.8006	.2206	.6406	.0606	.4806	.9006	.3206	.7407	.1607	.0007
017	.5406	.9606	.3807	.8007	.2207	.6407	.0607	.4807	.9008	.3208	.7408	.1608	.0009
420020	15.5407	15.9608	16.3808	16.8008	17.2208	17.6408	18.0609	18.4809	18.9009	19.3209	19.7409	20.1610	21.0010
023	.5409	.9609	.3809	.8009	.2209	.6410	.0610	.4810	.9010	.3211	.7411	.1611	.0012
026	.5410	.9610	.3810	.8010	.2211	.6411	.0611	.4811	.9012	.3212	.7412	.1612	.0013
029	.5411	.9611	.3811	.8012	.2212	.6412	.0612	.4813	.9013	.3213	.7414	.1614	.0015
032	.5412	.9612	.3812	.8013	.2213	.6413	.0614	.4814	.9014	.3215	.7415	.1615	.0016
420035	15.5413	15.9613	16.3814	16.8014	17.2214	17.6415	18.0615	18.4815	18.9016	19.3216	19.7416	20.1617	21.0018
038	.5414	.9614	.3815	.8015	.2216	.6416	.0616	.4817	.9017	.3217	.7418	.1618	.0019
041	.5415	.9616	.3816	.8016	.2217	.6417	.0618	.4818	.9018	.3219	.7419	.1620	.0021
044	.5416	.9617	.3817	.8018	.2218	.6418	.0619	.4819	.9020	.3220	.7421	.1621	.0022
047	.5417	.9618	.3818	.8019	.2219	.6420	.0620	.4821	.9021	.3222	.7422	.1623	.0024
420050	15.5419	15.9619	16.3820	16.8020	17.2221	17.6421	18.0622	18.4822	18.9023	19.3223	19.7424	20.1624	21.0025
053	.5420	.9620	.3821	.8021	.2222	.6422	.0623	.4823	.9024	.3224	.7425	.1625	.0027
056	.5421	.9621	.3822	.8022	.2223	.6424	.0624	.4825	.9025	.3226	.7426	.1627	.0028
059	.5422	.9622	.3823	.8024	.2224	.6425	.0625	.4826	.9027	.3227	.7428	.1628	.0030
062	.5423	.9624	.3824	.8025	.2225	.6426	.0627	.4827	.9028	.3229	.7429	.1630	.0031
420065	15.5424	15.9625	16.3825	16.8026	17.2227	17.6427	18.0628	18.4829	18.9029	19.3230	19.7431	20.1631	21.0033
068	.5425	.9626	.3827	.8027	.2228	.6429	.0629	.4830	.9031	.3231	.7432	.1633	.0034
071	.5426	.9627	.3828	.8028	.2229	.6430	.0631	.4831	.9032	.3233	.7433	.1634	.0036
074	.5427	.9628	.3829	.8030	.2230	.6431	.0632	.4833	.9033	.3234	.7435	.1636	.0037
077	.5428	.9629	.3830	.8031	.2232	.6432	.0633	.4834	.9035	.3235	.7436	.1637	.0039
420080	15.5430	15.9630	16.3831	16.8032	17.2233	17.6434	18.0634	18.4835	18.9036	19.3237	19.7438	20.1638	21.0040
083	.5431	.9632	.3832	.8033	.2234	.6435	.0636	.4837	.9037	.3238	.7439	.1640	.0042
086	.5432	.9633	.3834	.8034	.2235	.6436	.0637	.4838	.9039	.3240	.7440	.1641	.0043
089	.5433	.9634	.3835	.8036	.2236	.6437	.0638	.4839	.9040	.3241	.7442	.1643	.0045
092	.5434	.9635	.3836	.8037	.2238	.6439	.0640	.4840	.9041	.3242	.7443	.1644	.0046
420095	15.5435	15.9636	16.3837	16.8038	17.2239	17.6440	18.0641	18.4842	18.9043	19.3244	19.7445	20.1646	21.0048
098	.5436	.9637	.3838	.8039	.2240	.6441	.0642	.4843	.9044	.3245	.7446	.1647	.0049
101	.5437	.9638	.3839	.8040	.2241	.6442	.0643	.4844	.9045	.3246	.7447	.1648	.0051
104	.5438	.9640	.3841	.8042	.2243	.6444	.0645	.4846	.9047	.3248	.7449	.1650	.0052
107	.5440	.9641	.3842	.8043	.2244	.6445	.0646	.4847	.9048	.3249	.7450	.1651	.0054
420110	15.5441	15.9642	16.3843	16.8044	17.2245	17.6446	18.0647	18.4848	18.9050	19.3251	19.7452	20.1653	21.0055
113	.5442	.9643	.3844	.8045	.2246	.6447	.0649	.4850	.9051	.3252	.7453	.1654	.0057
116	.5443	.9644	.3845	.8046	.2248	.6449	.0650	.4851	.9052	.3253	.7455	.1656	.0058
119	.5444	.9645	.3846	.8048	.2249	.6450	.0651	.4852	.9054	.3255	.7456	.1657	.0060
122	.5445	.9646	.3848	.8049	.2250	.6451	.0652	.4854	.9055	.3256	.7457	.1659	.0061
420125	15.5446	15.9648	16.3849	16.8050	17.2251	17.6453	18.0654	18.4855	18.9056	19.3258	19.7459	20.1660	21.0063
128	.5447	.9649	.3850	.8051	.2252	.6454	.0655	.4856	.9058	.3259	.7460	.1661	.0064
131	.5448	.9650	.3851	.8052	.2254	.6455	.0656	.4858	.9059	.3260	.7462	.1663	.0066
134	.5450	.9651	.3852	.8054	.2255	.6456	.0658	.4859	.9060	.3262	.7463	.1664	.0067
137	.5451	.9652	.3853	.8055	.2256	.6458	.0659	.4860	.9062	.3263	.7464	.1666	.0069
420140	15.5452	15.9653	16.3855	16.8056	17.2257	17.6459	18.0660	18.4862	18.9063	19.3264	19.7466	20.1667	21.0070
143	.5453	.9654	.3856	.8057	.2259	.6460	.0661	.4863	.9064	.3266	.7467	.1669	.0072
146	.5454	.9655	.3857	.8058	.2260	.6461	.0663	.4864	.9066	.3267	.7469	.1670	.0073
149	.5455	.9657	.3858	.8060	.2261	.6463	.0664	.4866	.9067	.3269	.7470	.1672	.0075
152	.5456	.9658	.3859	.8061	.2262	.6464	.0665	.4867	.9068	.3270	.7471	.1673	.0076
420155	15.5457	15.9659	16.3860	16.8062	17.2264	17.6465	18.0667	18.4868	18.9070	19.3271	19.7473	20.1674	21.0078
158	.5458	.9660	.3862	.8063	.2265	.6466	.0668	.4870	.9071	.3273	.7474	.1676	.0079
161	.5460	.9661	.3863	.8064	.2266	.6468	.0669	.4871	.9072	.3274	.7476	.1677	.0081
164	.5461	.9662	.3864	.8066	.2267	.6469	.0671	.4872	.9074	.3275	.7477	.1679	.0082
167	.5462	.9663	.3865	.8067	.2268	.6470	.0672	.4873	.9075	.3277	.7478	.1680	.0084
420170	15.5463	15.9665	16.3866	16.8068	17.2270	17.6471	18.0673	18.4875	18.9077	19.3278	19.7480	20.1682	21.0085
173	.5464	.9666	.3867	.8069	.2271	.6473	.0674	.4876	.9078	.3280	.7481	.1683	.0087
176	.5465	.9667	.3869	.8070	.2272	.6474	.0676	.4877	.9079	.3281	.7483	.1684	.0088
179	.5466	.9668	.3870	.8072	.2273	.6475	.0677	.4879	.9081	.3282	.7484	.1686	.0090
182	.5467	.9669	.3871	.8073	.2275	.6476	.0678	.4880	.9082	.3284	.7486	.1687	.0091
420185	15.5468	15.9670	16.3872	16.8074	17.2276	17.6478	18.0680	18.4881	18.9083	19.3285	19.7487	20.1689	21.0093
188	.5470	.9671	.3873	.8075	.2277	.6479	.0681	.4883	.9085	.3286	.7488	.1690	.0094
191	.5471	.9673	.3874	.8076	.2278	.6480	.0682	.4884	.9086	.3288	.7490	.1692	.0096
194	.5472	.9674	.3876	.8078	.2280	.6481	.0683	.4885	.9087	.3289	.7491	.1693	.0097
197	.5473	.9675	.3877	.8079	.2281	.6483	.0685	.4887	.9089	.3291	.7493	.1695	.0099
420200	15.5474	15.9676	16.3878	16.8080	17.2282	17.6484	18.0686	18.4888	18.9090	19.3292	19.7494	20.1696	21.0100

MEGACYCLES PER SECOND

H A R M O N I C S

BASIC FREQ.	24	25	26	27	28	29	30	31	32	33	34	35	36
420200	10.0848	10.5050	10.9252	11.3454	11.7656	12.1858	12.6060	13.0262	13.4464	13.8666	14.2868	14.7070	15.1272
203	.0849	.5051	.9253	.3455	.7657	.1859	.6061	.0263	.4465	.8667	.2869	.7071	.1273
206	.0849	.5052	.9254	.3456	.7658	.1860	.6062	.0264	.4466	.8668	.2870	.7072	.1274
209	.0850	.5052	.9254	.3456	.7659	.1861	.6063	.0265	.4467	.8669	.2871	.7073	.1275
212	.0851	.5053	.9255	.3457	.7659	.1861	.6064	.0266	.4468	.8670	.2872	.7074	.1276
420215	10.0852	10.5054	10.9256	11.3458	11.7660	12.1862	12.6065	13.0267	13.4469	13.8671	14.2873	14.7075	15.1277
218	.0852	.5055	.9257	.3459	.7661	.1863	.6065	.0268	.4470	.8672	.2874	.7076	.1278
221	.0853	.5055	.9257	.3460	.7662	.1864	.6066	.0269	.4471	.8673	.2875	.7077	.1280
224	.0854	.5056	.9258	.3460	.7663	.1865	.6067	.0269	.4472	.8674	.2876	.7078	.1281
227	.0854	.5057	.9259	.3461	.7664	.1866	.6068	.0270	.4473	.8675	.2877	.7079	.1282
420230	10.0855	10.5058	10.9260	11.3462	11.7664	12.1867	12.6069	13.0271	13.4474	13.8676	14.2878	14.7081	15.1283
233	.0856	.5058	.9261	.3463	.7665	.1868	.6070	.0272	.4475	.8677	.2879	.7082	.1284
236	.0857	.5059	.9261	.3464	.7666	.1868	.6071	.0273	.4476	.8678	.2880	.7083	.1285
239	.0857	.5060	.9262	.3465	.7667	.1869	.6072	.0274	.4476	.8679	.2881	.7084	.1286
242	.0858	.5061	.9263	.3465	.7668	.1870	.6073	.0275	.4477	.8680	.2882	.7085	.1287
420245	10.0859	10.5061	10.9264	11.3466	11.7669	12.1871	12.6074	13.0276	13.4478	13.8681	14.2883	14.7086	15.1288
248	.0860	.5062	.9264	.3467	.7669	.1872	.6074	.0277	.4479	.8682	.2884	.7087	.1289
251	.0860	.5063	.9265	.3468	.7670	.1873	.6075	.0278	.4480	.8683	.2885	.7088	.1290
254	.0861	.5064	.9266	.3469	.7671	.1874	.6076	.0279	.4481	.8684	.2886	.7089	.1291
257	.0862	.5064	.9267	.3469	.7672	.1875	.6077	.0280	.4482	.8685	.2887	.7090	.1293
420260	10.0862	10.5065	10.9268	11.3470	11.7673	12.1875	12.6078	13.0281	13.4483	13.8686	14.2888	14.7091	15.1294
263	.0863	.5066	.9268	.3471	.7674	.1876	.6079	.0282	.4484	.8687	.2889	.7092	.1295
266	.0864	.5067	.9269	.3472	.7674	.1877	.6080	.0282	.4485	.8688	.2890	.7093	.1296
269	.0865	.5067	.9270	.3473	.7675	.1878	.6081	.0283	.4486	.8689	.2891	.7094	.1297
272	.0865	.5068	.9271	.3473	.7676	.1879	.6082	.0284	.4487	.8690	.2892	.7095	.1298
420275	10.0866	10.5069	10.9272	11.3474	11.7677	12.1880	12.6083	13.0285	13.4488	13.8691	14.2894	14.7096	15.1299
278	.0867	.5070	.9272	.3475	.7678	.1881	.6083	.0286	.4489	.8692	.2895	.7097	.1300
281	.0867	.5070	.9273	.3476	.7679	.1881	.6084	.0287	.4490	.8693	.2896	.7098	.1301
284	.0868	.5071	.9274	.3477	.7680	.1882	.6085	.0288	.4491	.8694	.2897	.7099	.1302
287	.0869	.5072	.9275	.3477	.7680	.1883	.6086	.0289	.4492	.8695	.2898	.7100	.1303
420290	10.0870	10.5073	10.9275	11.3478	11.7681	12.1884	12.6087	13.0290	13.4493	13.8696	14.2899	14.7102	15.1304
293	.0870	.5073	.9276	.3479	.7682	.1885	.6088	.0291	.4494	.8697	.2900	.7103	.1305
296	.0871	.5074	.9277	.3480	.7683	.1886	.6089	.0292	.4495	.8698	.2901	.7104	.1307
299	.0872	.5075	.9278	.3481	.7684	.1887	.6090	.0293	.4496	.8699	.2902	.7105	.1308
302	.0872	.5076	.9279	.3482	.7685	.1888	.6091	.0294	.4497	.8700	.2903	.7106	.1309
420305	10.0873	10.5076	10.9279	11.3482	11.7685	12.1888	12.6092	13.0295	13.4498	13.8701	14.2904	14.7107	15.1310
308	.0874	.5077	.9280	.3483	.7686	.1889	.6092	.0295	.4499	.8702	.2905	.7108	.1311
311	.0875	.5078	.9281	.3484	.7687	.1890	.6093	.0296	.4500	.8703	.2906	.7109	.1312
314	.0875	.5079	.9282	.3485	.7688	.1891	.6094	.0297	.4500	.8704	.2907	.7110	.1313
317	.0876	.5079	.9282	.3486	.7689	.1892	.6095	.0298	.4501	.8705	.2908	.7111	.1314
420320	10.0877	10.5080	10.9283	11.3486	11.7690	12.1893	12.6096	13.0299	13.4502	13.8706	14.2909	14.7112	15.1315
323	.0878	.5081	.9284	.3487	.7690	.1894	.6097	.0300	.4503	.8707	.2910	.7113	.1316
326	.0878	.5082	.9285	.3488	.7691	.1895	.6098	.0301	.4504	.8708	.2911	.7114	.1317
329	.0879	.5082	.9286	.3489	.7692	.1895	.6099	.0302	.4505	.8709	.2912	.7115	.1318
332	.0880	.5083	.9286	.3490	.7693	.1896	.6100	.0303	.4506	.8710	.2913	.7116	.1320
420335	10.0880	10.5084	10.9287	11.3490	11.7694	12.1897	12.6101	13.0304	13.4507	13.8711	14.2914	14.7117	15.1321
338	.0881	.5085	.9288	.3491	.7695	.1898	.6101	.0305	.4508	.8712	.2915	.7118	.1322
341	.0882	.5085	.9289	.3492	.7695	.1899	.6102	.0306	.4509	.8713	.2916	.7119	.1323
344	.0883	.5086	.9289	.3493	.7696	.1900	.6103	.0307	.4510	.8714	.2917	.7120	.1324
347	.0883	.5087	.9290	.3494	.7697	.1901	.6104	.0308	.4511	.8715	.2918	.7121	.1325
420350	10.0884	10.5088	10.9291	11.3495	11.7698	12.1902	12.6105	13.0309	13.4512	13.8716	14.2919	14.7123	15.1326
353	.0885	.5088	.9292	.3495	.7690	.1902	.6106	.0309	.4513	.8716	.2920	.7124	.1327
356	.0885	.5089	.9293	.3496	.7700	.1903	.6107	.0310	.4514	.8717	.2921	.7125	.1328
359	.0886	.5090	.9293	.3497	.7701	.1904	.6108	.0311	.4515	.8718	.2922	.7126	.1329
362	.0887	.5091	.9294	.3498	.7701	.1905	.6109	.0312	.4516	.8719	.2923	.7127	.1330
420365	10.0888	10.5091	10.9295	11.3499	11.7702	12.1906	12.6110	13.0313	13.4517	14.8720	14.2924	14.7128	15.1331
368	.0888	.5092	.9296	.3499	.7703	.1907	.6110	.0314	.4518	.8721	.2925	.7129	.1332
371	.0889	.5093	.9296	.3500	.7704	.1908	.6111	.0315	.4519	.8722	.2926	.7130	.1334
374	.0890	.5094	.9297	.3501	.7705	.1908	.6112	.0316	.4520	.8723	.2927	.7131	.1335
377	.0890	.5094	.9298	.3502	.7706	.1909	.6113	.0317	.4521	.8724	.2928	.7132	.1336
420380	10.0891	10.5095	10.9299	11.3503	11.7706	12.1910	12.6114	13.0318	13.4522	13.8725	14.2929	14.7133	15.1337
383	.0892	.5096	.9300	.3503	.7707	.1911	.6115	.0319	.4523	.8726	.2930	.7134	.1338
386	.0893	.5097	.9300	.3504	.7708	.1912	.6116	.0320	.4524	.8727	.2931	.7135	.1339
389	.0893	.5097	.8301	.3505	.7709	.1913	.6117	.0321	.4524	.8728	.2932	.7136	.1340
392	.0894	.5098	.9302	.3506	.7710	.1914	.6118	.0322	.4525	.8729	.2933	.7137	.1341
420395	10.0895	10.5099	10.9303	11.3507	11.7711	12.1915	12.6119	13.0322	13.4526	13.8730	14.2934	14.7138	15.1342
398	.0896	.5100	.9303	.3507	.7711	.1915	.6119	.0323	.4527	.8731	.2935	.7139	.1343
401	.0896	.5100	.9304	.3508	.7712	.1916	.6120	.0324	.4528	.8732	.2936	.7140	.1344
404	.0897	.5101	.9305	.3509	.7713	.1917	.6121	.0325	.4529	.8733	.2937	.7141	.1345
407	.0898	.5102	.9306	.3510	.7714	.1918	.6122	.0326	.4530	.8734	.2938	.7142	.1347
420410	10.0898	10.5103	10.9307	11.3511	11.7715	12.1919	12.6123	13.0327	13.4531	13.8735	14.2939	14.7144	15.1348
413	.0899	.5103	.9307	.3512	.7716	.1920	.6124	.0328	.4532	.8736	.2940	.7145	.1349
416	.0900	.5104	.9308	.3512	.7716	.1921	.6125	.0329	.4533	.8737	.2941	.7146	.1350
419	.0901	.5105	.9309	.3513	.7717	.1922	.6126	.0330	.4534	.8738	.2942	.7147	.1351
422	.0901	.5106	.9310	.3514	.7718	.1922	.6127	.0331	.4535	.8739	.2943	.7148	.1352
420425	10.0902	10.5106	10.9311	11.3515	11.7719	12.1923	12.6128	13.0332	13.4536	13.8740	14.2945	14.7149	15.1353
428	.0903	.5107	.9311	.3516	.7720	.1924	.6128	.0333	.4537	.8741	.2946	.7150	.1354
431	.0903	.5108	.9312	.3516	.7721	.1925	.6129	.0334	.4538	.8742	.2947	.7151	.1355
434	.0904	.5109	.9313	.3517	.7722	.1926	.6130	.0335	.4539	.8743	.2948	.7152	.1356
437	.0905	.5109	.9314	.3518	.7722	.1927	.6131	.0335	.4540	.8744	.2949	.7153	.1357
420440	10.0906	10.5110	10.9314	11.3519	11.7723	12.1928	12.6132	13.0336	13.4541	13.8745	14.2950	14.7154	15.1358
443	.0906	.5111	.9315	.3520	.7724	.1928	.6133	.0337	.4542	.8746	.2951	.7155	.1359
446	.0907	.5112	.9316	.3520	.7725	.1929	.6134	.0338	.4543	.8747	.2952	.7156	.1361
449	.0908	.5112	.9317	.3521	.7726	.1930	.6135	.0339	.4544	.8748	.2953	.7157	.1362
452	.0908	.5113	.9318	.3522	.7727	.1931	.6136	.0340	.4545	.8749	.2954	.7158	.1363
420455	10.0909	10.5114	10.9318	11.3523	11.7727	12.1932	12.6137	13.0341	13.4546	13.8750	14.2955	13.7159	15.1364
458	.0910	.5115	.9319	.3524	.7728	.1933	.6137	.0342	.4547	.8751	.2956	.7160	.1365
461	.0911	.5115	.9320	.3524	.7729	.1934	.6138	.0343	.4548	.8752	.2957	.7161	.1366
464	.0911	.5116	.8321	.3525	.7730	.1935	.6139	.0344	.4548	.8753	.2958	.7162	.1367
467	.0912	.5117	.9321	.3526	.7731	.1935	.6140	.0345	.4549	.8754	.2959	.7163	.1368
420470	10.0913	10.5118	10.9322	11.3527	11.7732	12.1936	12.6141	13.0346	13.4550	13.8755	14.2960	14.7165	15.1369
473	.0914	.5118	.9323	.3528	.7732	.1937	.6142	.0347	.4551	.8756	.2961	.7166	.1370
476	.0914	.5119	.9324	.3529	.7733	.1938	.6143	.0348	.4552	.8757	.2962	.7167	.1371
479	.0915	.5120	.9325	.3529	.7734	.1939	.6144	.0348	.4553	.8758	.2963	.7168	.1372
482	.0916	.5121	.9325	.3530	.7735	.1940	.6145	.0349	.4554	.8759	.2964	.7169	.1374
420485	10.0916	10.5121	10.9326	11.3531	11.7736	12.1941	12.6146	13.0350	13.4555	13.8760	14.2965	14.7170	15.1375
488	.0917	.5122	.9327	.3532	.7737	.1942	.6146	.0351	.4556	.8761	.2966	.7171	.1376
491	.0918	.5123	.9328	.3533	.7737	.1942	.6147	.0352	.4557	.8762	.2967	.7172	.1377
494	.0919	.5124	.9328	.3533	.7738	.1943	.6148	.0353	.4558	.8763	.2968	.7173	.1378
497	.0919	.5124	.9329	.3534	.7739	.1944	.6149	.0354	.4559	.8764	.2969	.7174	.1379
420500	10.0920	10.5125	10.9330	11.3535	11.7740	12.1945	12.6150	13.0355	13.4560	13.8765	14.2970	14.7175	15.1380

MEGACYCLES PER SECOND

HARMONICS

BASIC FREQ.	37	38	39	40	41	42	43	44	45	46	47	48	50
420200	15.5474	15.9676	16.3878	16.8080	17.2282	17.6484	18.0686	18.4888	18.9090	19.3292	19.7494	20.1696	21.0100
203	.5475	.9677	.3879	.8081	.2283	.6485	.0687	.4889	.9091	.3293	.7495	.1697	.0102
206	.5476	.9678	.3880	.8082	.2284	.6487	.0689	.4891	.9093	.3295	.7497	.1699	.0103
209	.5477	.9679	.3882	.8084	.2286	.6488	.0690	.4892	.9094	.3296	.7498	.1700	.0105
212	.5478	.9681	.3883	.8085	.2287	.6489	.0691	.4893	.9095	.3298	.7500	.1702	.0106
420215	15.5480	15.9682	16.3884	16.8086	17.2288	17.6490	18.0692	18.4895	18.9097	19.3299	19.7501	20.1703	21.0108
218	.5481	.9683	.3885	.8087	.2289	.6492	.0694	.4896	.9098	.3300	.7502	.1705	.0109
221	.5482	.9684	.3886	.8088	.2291	.6493	.0695	.4897	.9099	.3302	.7504	.1706	.0111
224	.5483	.9685	.3887	.8090	.2292	.6494	.0696	.4899	.9101	.3303	.7505	.1708	.0112
227	.5484	.9686	.3889	.8091	.2293	.6495	.0698	.4900	.9102	.3304	.7507	.1709	.0114
420230	15.5485	15.9687	16.3890	16.8092	17.2294	17.6497	18.0699	18.4901	18.9104	19.3306	19.7508	20.1710	21.0115
233	.5486	.9689	.3891	.8093	.2296	.6498	.0700	.4903	.9105	.3307	.7510	.1712	.0117
236	.5487	.9690	.3892	.8094	.2297	.6499	.0701	.4904	.9106	.3309	.7511	.1713	.0118
239	.5488	.9691	.3893	.8096	.2298	.6500	.0703	.4905	.9108	.3310	.7512	.1715	.0120
242	.5490	.9692	.3894	.8097	.2299	.6502	.0704	.4906	.9109	.3311	.7514	.1716	.0121
420245	15.5491	15.9693	16.3896	16.8098	17.2300	17.6503	18.0705	18.4908	18.9110	19.3313	19.7515	20.1718	21.0123
248	.5492	.9694	.3897	.8099	.2302	.6504	.0707	.4909	.9112	.3314	.7517	.1719	.0124
251	.5493	.9695	.3898	.8100	.2303	.6505	.0708	.4910	.9113	.3315	.7518	.1720	.0126
254	.5494	.9697	.3899	.8102	.2304	.6507	.0709	.4912	.9114	.3317	.7519	.1722	.0127
257	.5495	.9698	.3900	.8103	.2305	.6508	.0711	.4913	.9116	.3318	.7521	.1723	.0129
420260	15.5496	15.9699	16.3901	16.8104	17.2307	17.6509	18.0712	18.4914	18.9117	19.3320	19.7522	20.1725	21.0130
263	.5497	.9700	.3903	.8105	.2308	.6510	.0713	.4916	.9118	.3321	.7524	.1726	.0132
266	.5498	.9701	.3904	.8106	.2309	.6512	.0714	.4917	.9120	.3322	.7525	.1728	.0133
269	.5500	.9702	.3905	.8108	.2310	.6513	.0716	.4918	.9121	.3324	.7526	.1729	.0135
272	.5501	.9703	.3906	.8109	.2312	.6514	.0717	.4920	.9122	.3325	.7528	.1731	.0136
420275	15.5502	15.9705	16.3907	16.8110	17.2313	17.6516	18.0718	18.4921	18.9124	19.3327	19.7529	20.1732	21.0138
278	.5503	.9706	.3908	.8111	.2314	.6517	.0720	.4922	.9125	.3328	.7531	.1733	.0139
281	.5504	.9707	.3910	.8112	.2315	.6518	.0721	.4924	.9126	.3329	.7532	.1735	.0141
284	.5505	.9708	.3911	.8114	.2316	.6519	.0722	.4925	.9128	.3331	.7533	.1736	.0142
287	.5506	.9709	.3912	.8115	.2318	.6521	.0723	.4926	.9129	.3332	.7535	.1738	.0144
420290	15.5507	15.9710	16.3913	16.8116	17.2319	17.6522	18.0725	18.4928	18.9131	19.3333	19.7536	20.1739	21.0145
293	.5508	.9711	.3914	.8117	.2320	.6523	.0726	.4929	.9132	.3335	.7538	.1741	.0147
296	.5510	.9712	.3915	.8118	.2321	.6524	.0727	.4930	.9133	.3336	.7539	.1742	.0148
299	.5511	.9714	.3917	.8120	.2323	.6526	.0729	.4932	.9135	.3338	.7541	.1744	.0150
302	.5512	.9715	.3918	.8121	.2324	.6527	.0730	.4933	.9136	.3339	.7542	.1745	.0151
420305	15.5513	15.9716	16.3919	16.8122	17.2325	17.6528	18.0731	18.4934	18.9137	19.3340	19.7543	20.1746	21.0153
308	.5514	.9717	.3920	.8123	.2326	.6529	.0732	.4936	.9139	.3342	.7545	.1748	.0154
311	.5515	.9718	.3921	.8124	.2328	.6531	.0734	.4937	.9140	.3343	.7546	.1749	.0156
314	.5516	.9719	.3922	.8126	.2329	.6532	.0735	.4938	.9141	.3344	.7548	.1751	.0157
317	.5517	.9720	.3924	.8127	.2330	.6533	.0736	.4939	.9143	.3346	.7549	.1752	.0159
420320	15.5518	15.9722	16.3925	16.8128	17.2331	17.6534	18.0738	18.4941	18.9144	19.3347	19.7550	20.1754	21.0160
323	.5520	.9723	.3926	.8129	.2332	.6536	.0739	.4942	.9145	.3349	.7552	.1755	.0162
326	.5521	.9724	.3927	.8130	.2334	.6537	.0740	.4943	.9147	.3350	.7553	.1756	.0163
329	.5522	.9725	.3928	.9132	.2335	.6538	.0741	.4945	.9148	.3351	.7555	.1758	.0165
332	.5523	.9726	.3929	.8133	.2336	.6539	.0743	.4946	.9149	.3353	.7556	.1759	.0166
420335	15.5524	15.9727	16.3931	16.8134	17.2337	17.6541	18.0744	18.4947	18.9151	19.3354	19.7557	20.1761	21.0168
338	.5525	.9728	.3932	.8135	.2339	.6542	.0745	.4949	.9152	.3355	.7559	.1762	.0169
341	.5526	.9730	.3933	.8136	.2340	.6543	.0747	.4950	.9153	.3357	.7560	.1764	.0171
344	.5527	.9731	.3934	.8138	.2341	.6544	.0748	.4951	.9155	.3358	.7562	.1765	.0172
347	.5528	.9732	.3935	.8139	.2342	.6546	.0749	.4953	.9156	.3360	.7563	.1767	.0174
420350	15.5530	15.9733	16.3937	16.8140	17.2344	17.6547	18.0751	18.4954	18.9158	19.3361	19.7565	20.1768	21.0175
353	.5531	.9734	.3938	.8141	.2345	.6548	.0752	.4955	.9159	.3362	.7566	.1769	.0177
356	.5532	.9735	.3939	.8142	.2346	.6550	.0753	.4957	.9160	.3364	.7567	.1771	.0178
359	.5533	.9736	.3940	.8144	.2347	.6551	.0754	.4958	.9162	.3365	.7569	.1772	.0180
362	.5534	.9738	.3941	.8145	.2348	.6552	.0756	.4959	.9163	.3367	.7570	.1774	.0181
420365	15.5535	15.9739	16.3942	16.8146	17.2350	17.6553	18.0757	18.4961	18.9164	19.3368	19.7572	20.1775	21.0183
368	.5536	.9740	.3944	.8147	.2351	.6555	.0758	.4962	.9166	.3369	.7573	.1777	.0184
371	.5537	.9741	.3945	.8148	.2352	.6556	.0760	.4963	.9167	.3371	.7574	.1778	.0186
374	.5538	.9742	.3946	.8150	.2353	.6557	.0761	.4965	.9168	.3372	.7576	.1780	.0187
377	.5539	.9743	.3947	.8151	.2355	.6558	.0762	.4966	.9170	.3373	.7577	.1781	.0189
420380	15.5541	15.9744	16.3948	16.8152	17.2356	17.6560	18.0763	18.4967	18.9171	19.3375	19.7579	20.1782	21.0190
383	.5542	.9746	.3949	.8153	.2357	.6561	.0765	.4969	.9172	.3376	.7580	.1784	.0192
386	.5543	.9747	.3951	.8154	.2358	.6562	.0766	.4970	.9174	.3378	.7581	.1785	.0193
389	.5544	.9748	.3952	.8156	.2359	.6563	.0767	.4971	.9175	.3379	.7583	.1787	.0195
392	.5545	.9749	.3953	.8157	.2361	.6565	.0769	.4972	.9176	.3380	.7584	.1788	.0196
420395	15.5546	15.9750	16.3954	16.8158	17.2362	17.6566	18.0770	18.4974	18.9178	19.3382	19.7586	20.1790	21.0198
398	.5547	.9751	.3955	.8159	.2363	.6567	.0771	.4975	.9179	.3383	.7587	.1791	.0199
401	.5548	.9752	.3956	.8160	.2364	.6568	.0772	.4976	.9180	.3384	.7588	.1792	.0201
404	.5549	.9754	.3958	.8162	.2366	.6570	.0774	.4978	.9182	.3386	.7590	.1794	.0202
407	.5551	.9755	.3959	.8163	.2367	.6571	.0775	.4979	.9183	.3387	.7591	.1795	.0204
420410	15.5552	15.9756	16.3960	16.8164	17.2368	17.6572	18.0776	18.4980	18.9185	19.3389	19.7593	20.1797	21.0205
413	.5553	.9757	.3961	.8165	.2369	.6573	.0778	.4982	.9186	.3390	.7594	.1798	.0207
416	.5554	.9758	.3962	.8166	.2371	.6575	.0779	.4983	.9187	.3391	.7596	.1800	.0208
419	.5555	.9759	.3963	.8168	.2372	.6576	.0780	.4984	.9189	.3393	.7597	.1801	.0210
422	.5556	.9760	.3965	.8169	.2373	.6577	.0781	.4986	.9190	.3394	.7598	.1803	.0211
420425	15.5557	15.9762	16.3966	16.8170	17.2374	17.6579	18.0783	18.4987	18.9191	19.3396	19.7600	20.1804	21.0213
428	.5558	.9763	.3967	.8171	.2375	.6580	.0784	.4988	.9193	.3397	.7601	.1805	.0214
431	.5559	.9764	.3968	.8172	.2377	.6581	.0785	.4990	.9194	.3398	.7603	.1807	.0216
434	.5561	.9765	.3969	.8174	.2378	.6582	.0787	.4991	.9195	.3400	.7604	.1808	.0217
437	.5562	.9766	.3970	.8175	.2379	.6584	.0788	.4992	.9197	.3401	.7605	.1810	.0219
420440	15.5563	15.9767	16.3972	16.8176	17.2380	17.6585	18.0789	18.4994	18.9198	19.3402	19.7607	20.1811	21.0220
443	.5564	.9768	.3973	.8177	.2382	.6586	.0790	.4995	.9199	.3404	.7608	.1813	.0222
446	.5565	.9769	.3974	.8178	.2383	.6587	.0792	.4996	.9201	.3405	.7610	.1814	.0223
449	.5566	.9771	.3975	.8180	.2384	.6589	.0793	.4998	.9202	.3407	.7611	.1816	.0225
452	.5567	.9772	.3976	.8181	.2385	.6590	.0794	.4999	.9203	.3408	.7612	.1817	.0226
420455	15.5568	15.9773	16.3977	16.8182	17.2387	17.6591	18.0796	18.5000	18.9205	19.3409	19.7614	20.1818	21.0228
458	.5569	.9774	.3979	.8183	.2388	.6592	.0797	.5002	.9206	.3411	.7615	.1820	.0229
461	.5571	.9775	.3980	.8184	.2389	.6594	.0798	.5003	.9207	.3412	.7617	.1821	.0231
464	.5572	.9776	.3981	.8186	.2390	.6595	.0800	.5004	.9209	.3413	.7618	.1823	.0232
467	.5573	.9777	.3982	.8187	.2391	.6596	.0801	.5005	.9210	.3415	.7619	.1824	.0234
420470	15.5574	15.9779	16.3983	16.8188	17.2393	17.6597	18.0802	18.5007	18.9212	19.3416	19.7621	20.1826	21.0235
473	.5575	.9780	.3984	.8189	.2394	.6599	.0803	.5008	.9213	.3418	.7622	.1827	.0237
476	.5576	.9781	.3986	.8190	.2395	.6600	.0805	.5009	.9214	.3419	.7624	.1828	.0238
479	.5577	.9782	.3987	.8192	.2396	.6601	.0806	.5011	.9216	.3420	.7625	.1830	.0240
482	.5578	.9783	.3988	.8193	.2398	.6602	.0807	.5012	.9217	.3422	.7627	.1831	.0241
420485	15.5579	15.9784	16.3989	16.8194	17.2399	17.6604	18.0809	18.5013	18.9218	19.3423	17.7628	20.1833	21.0243
488	.5581	.9785	.3990	.8195	.2400	.6605	.0810	.5015	.9220	.3424	.7629	.1834	.0244
491	.5582	.9787	.3991	.8196	.2401	.6606	.0811	.5016	.9221	.3426	.7631	.1836	.0246
494	.5583	.9788	.3993	.8198	.2403	.6607	.0812	.5017	.9222	.3427	.7632	.1837	.0247
497	.5584	.9789	.3994	.8199	.2404	.6609	.0814	.5019	.9224	.3429	.7634	.1839	.0249
420500	15.5585	15.9790	16.3995	16.8200	17.2405	17.6610	18.0815	18.5020	18.9225	19.3430	19.7635	20.1840	21.0250

MEGACYCLES PER SECOND

H A R M O N I C S

BASIC FREQ.	24	25	26	27	28	29	30	31	32	33	34	35	36
420500	10.0920	10.5125	10.9330	11.3535	11.7740	12.1945	12.6150	13.0355	13.4560	13.8765	14.2970	14.7175	15.1380
503	.0921	.5126	.9331	.3536	.7741	.1946	.6151	.0356	.4561	.8766	.2971	.7176	.1381
506	.0921	.5127	.9332	.3537	.7742	.1947	.6152	.0357	.4562	.8767	.2972	.7177	.1382
509	.0922	.5127	.9332	.3537	.7743	.1948	.6153	.0358	.4563	.8768	.2973	.7178	.1383
512	.0923	.5128	.9333	.3538	.7743	.1948	.6154	.0359	.4564	.8769	.2974	.7179	.1384
420515	10.0924	10.5129	10.9334	11.3539	11.7744	12.1949	12.6155	13.0360	13.4565	13.8770	14.2975	14.7180	15.1385
518	.0924	.5130	.9335	.3540	.7745	.1950	.6155	.0361	.4566	.8771	.2976	.7181	.1386
521	.0925	.5130	.9335	.3541	.7746	.1951	.6156	.0362	.4567	.8772	.2977	.7182	.1388
524	.0926	.5131	.9336	.3541	.7747	.1952	.6157	.0362	.4568	.8773	.2978	.7183	.1389
527	.0926	.5132	.9337	.3542	.7748	.1953	.6158	.0363	.4569	.8774	.2979	.7184	.1390
420530	10.0927	10.5133	10.9338	11.3543	11.7748	12.1954	12.6159	13.0364	13.4570	13.8775	14.2980	14.7186	15.1391
533	.0928	.5133	.9339	.3544	.7749	.1955	.6160	.0365	.4571	.8776	.2981	.7187	.1392
536	.0929	.5134	.9339	.3545	.7750	.1955	.6161	.0366	.4572	.8777	.2982	.7188	.1393
539	.0929	.5135	.9340	.3546	.7751	.1956	.6162	.0367	.4572	.8778	.2983	.7189	.1394
542	.0930	.5136	.9341	.3546	.7752	.1957	.6163	.0368	.4573	.8779	.2984	.7190	.1395
420545	10.0931	10.5136	10.9342	11.3547	11.7753	12.1958	12.6164	13.0369	13.4574	13.8780	14.2985	14.7191	15.1396
548	.0932	.5137	.9342	.3548	.7753	.1959	.6164	.0370	.4575	.8781	.2986	.7192	.1397
551	.0932	.5138	.9343	.3549	.7754	.1960	.6165	.0371	.4576	.8782	.2987	.7193	.1398
554	.0933	.5139	.9344	.3550	.7755	.1961	.6166	.0372	.4577	.8783	.2988	.7194	.1399
557	.0934	.5139	.9345	.3550	.7756	.1962	.6167	.0373	.4578	.8784	.2989	.7195	.1401
420560	10.0934	10.5140	10.9346	11.3551	11.7757	12.1962	12.6168	13.0374	13.4579	13.8785	14.2990	14.7196	15.1402
563	.0935	.5141	.9346	.3552	.7758	.1963	.6169	.0375	.4580	.8786	.2991	.7197	.1403
566	.0936	.5142	.9347	.3553	.7758	.1964	.6170	.0375	.4581	.8787	.2992	.7198	.1404
569	.0937	.5142	.9348	.3554	.7759	.1965	.6171	.0376	.4582	.8788	.2993	.7199	.1405
572	.0937	.5143	.9349	.3554	.7760	.1966	.6172	.0377	.4583	.8789	.2994	.7200	.1406
420575	10.0938	10.5144	10.9350	11.3555	11.7761	12.1967	12.6173	13.0378	13.4584	13.8790	14.2996	14.7201	15.1407
578	.0939	.5145	.9350	.3556	.7762	.1968	.6173	.0379	.4585	.8791	.2997	.7202	.1408
581	.0939	.5145	.9351	.3557	.7763	.1968	.6174	.0380	.4586	.8792	.2998	.7203	.1409
584	.0940	.5146	.9352	.3558	.7764	.1969	.6175	.0381	.4587	.8793	.2999	.7204	.1410
587	.0941	.5147	.9353	.3558	.7764	.1970	.6176	.0382	.4588	.8794	.3000	.7205	.1411
420590	10.0942	10.5148	10.9353	11.3559	11.7765	12.1971	12.6177	13.0383	13.4589	13.8795	14.3001	14.7207	15.1412
593	.0942	.5148	.9354	.3560	.7766	.1972	.6178	.0384	.4590	.8796	.3002	.7208	.1413
596	.0943	.5149	.9355	.3561	.7767	.1973	.6179	.0385	.4591	.8797	.3003	.7209	.1415
599	.0944	.5150	.9356	.3562	.7768	.1974	.6180	.0386	.4592	.8798	.3004	.7210	.1416
602	.0944	.5151	.9357	.3563	.7769	.1975	.6181	.0387	.4593	.8799	.3005	.7211	.1417
420605	10.0945	10.5151	10.9357	11.3563	11.7769	12.1975	12.6182	13.0388	13.4594	13.8800	14.3006	14.7212	15.1418
608	.0946	.5152	.9358	.3564	.7770	.1976	.6182	.0388	.4595	.8801	.3007	.7213	.1419
611	.0947	.5153	.9359	.3565	.7771	.1977	.6183	.0389	.4596	.8802	.3008	.7214	.1420
614	.0947	.5154	.9360	.3566	.7772	.1978	.6184	.0390	.4596	.8803	.3009	.7215	.1421
617	.0948	.5154	.9360	.3567	.7773	.1979	.6185	.0391	.4597	.8804	.3010	.7216	.1422
420620	10.0949	10.5155	10.9361	11.3567	11.7774	12.1980	12.6186	13.0392	13.4598	13.8805	14.3011	14.7217	15.1423
623	.0950	.5156	.9362	.3568	.7774	.1981	.6187	.0393	.4599	.8806	.3012	.7218	.1424
626	.0950	.5157	.9363	.3569	.7775	.1982	.6188	.0394	.4600	.8807	.3013	.7219	.1425
629	.0951	.5157	.9364	.3570	.7776	.1982	.6189	.0395	.4601	.8808	.3014	.7220	.1426
632	.0952	.5158	.9364	.3571	.7777	.1983	.6190	.0396	.4602	.8809	.3015	.7221	.1428
420635	10.0952	10.5159	10.9365	11.3571	11.7778	12.1984	12.6191	13.0397	13.4603	13.8810	14.3016	14.7222	15.1429
638	.0953	.5160	.9366	.3572	.7779	.1985	.6191	.0398	.4604	.8811	.3017	.7223	.1430
641	.0954	.5160	.9367	.3573	.7779	.1986	.6192	.0399	.4605	.8812	.3018	.7224	.1431
644	.0955	.5161	.9367	.3574	.7780	.1987	.6193	.0400	.4606	.8813	.3019	.7225	.1432
647	.0955	.5162	.9368	.3575	.7781	.1988	.6194	.0401	.4607	.8814	.3020	.7226	.1433
420650	10.0956	10.5163	10.9369	11.3576	11.7782	12.1989	12.6195	13.0402	13.4608	13.8815	14.3021	14.7228	15.1434
653	.0957	.5163	.9370	.3576	.7783	.1989	.6196	.0402	.4609	.8815	.3022	.7229	.1435
656	.0957	.5164	.9371	.3577	.7784	.1990	.6197	.0403	.4610	.8816	.3023	.7230	.1436
659	.0958	.5165	.9371	.3578	.7785	.1991	.6198	.0404	.4611	.8817	.3024	.7231	.1437
662	.0959	.5166	.9372	.3579	.7785	.1992	.6199	.0405	.4612	.8818	.3025	.7232	.1438
420665	10.0960	10.5166	10.9373	11.3580	11.7786	12.1993	12.6200	13.0406	13.4613	13.8819	14.3026	14.7233	15.1439
668	.0960	.5167	.9374	.3580	.7787	.1994	.6200	.0407	.4614	.8820	.3027	.7234	.1440
671	.0961	.5168	.9374	.3581	.7788	.1995	.6201	.0408	.4615	.8821	.3028	.7235	.1442
674	.0962	.5169	.9375	.3582	.7789	.1995	.6202	.0409	.4616	.8822	.3029	.7236	.1443
677	.0962	.5169	.9376	.3583	.7790	.1996	.6203	.0410	.4617	.8823	.3030	.7237	.1444
420680	10.0963	10.5170	10.9377	11.3584	11.7790	12.1997	12.6204	13.0411	13.4618	13.8824	14.3031	14.7238	15.1445
683	.0964	.5171	.9378	.3584	.7791	.1998	.6205	.0412	.4619	.8825	.3032	.7239	.1446
686	.0965	.5172	.9378	.3585	.7792	.1999	.6206	.0413	.4620	.8826	.3033	.7240	.1447
689	.0965	.5172	.9379	.3586	.7793	.2000	.6207	.0414	.4620	.8827	.3034	.7241	.1448
692	.0966	.5173	.9380	.3587	.7794	.2001	.6208	.0415	.4621	.8828	.3035	.7242	.1449
420695	10.0967	10.5174	10.9381	11.3588	11.7795	12.2002	12.6209	13.0415	13.4622	13.8829	14.3036	14.7243	15.1450
698	.0968	.5175	.9381	.3588	.7795	.2002	.6209	.0416	.4623	.8830	.3037	.7244	.1451
701	.0968	.5175	.9382	.3589	.7796	.2003	.6210	.0417	.4624	.8831	.3038	.7245	.1452
704	.0969	.5176	.9383	.3590	.7797	.2004	.6211	.0418	.4625	.8832	.3039	.7246	.1453
707	.0970	.5177	.9384	.3591	.7798	.2005	.6212	.0419	.4626	.8833	.3040	.7247	.1455
420710	10.0970	10.5178	10.9385	11.3592	11.7799	12.2006	12.6213	13.0420	13.4627	13.8834	14.3041	14.7249	15.1456
713	.0971	.5178	.9385	.3593	.7800	.2007	.6214	.0421	.4628	.8835	.3042	.7250	.1457
716	.0972	.5179	.9386	.3593	.7800	.2008	.6215	.0422	.4629	.8836	.3043	.7251	.1458
719	.0973	.5180	.9387	.3594	.7801	.2009	.6216	.0423	.4630	.8837	.3044	.7252	.1459
722	.0973	.5181	.9388	.3595	.7802	.2009	.6217	.0424	.4631	.8838	.3045	.7253	.1460
420725	10.0974	10.5181	10.9389	11.3596	11.7803	12.2010	12.6218	13.0425	13.4632	13.8839	14.3047	14.7254	15.1461
728	.0975	.5182	.9389	.3597	.7804	.2011	.6218	.0426	.4633	.8840	.3048	.7255	.1462
731	.0975	.5183	.9390	.3597	.7805	.2012	.6219	.0427	.4634	.8841	.3049	.7256	.1463
734	.0976	.5184	.9391	.3598	.7806	.2013	.6220	.0428	.4635	.8842	.3050	.7257	.1464
737	.0977	.5184	.9392	.3599	.7806	.2014	.6221	.0428	.4636	.8843	.3051	.7258	.1465
420740	10.0978	10.5185	10.9392	11.3600	11.7807	12.2015	12.6222	13.0429	13.4637	13.8844	14.3052	14.7259	15.1466
743	.0978	.5186	.9393	.3601	.7808	.2015	.6223	.0430	.4638	.8845	.3053	.7260	.1467
746	.0979	.5187	.9394	.3601	.7809	.2016	.6224	.0431	.4639	.8846	.3054	.7261	.1469
749	.0980	.5187	.9395	.3602	.7810	.2017	.6225	.0432	.4640	.8847	.3055	.7262	.1470
752	.0980	.5188	.9396	.3603	.7811	.2018	.6226	.0433	.4641	.8848	.3056	.7263	.1471
420755	10.0981	10.5189	10.9396	11.3604	11.7811	12.2019	12.6227	13.0434	13.4642	13.8849	14.3057	14.7264	15.1472
758	.0982	.5190	.9397	.3605	.7812	.2020	.6227	.0435	.4643	.8850	.3058	.7265	.1473
761	.0983	.5190	.9398	.3605	.7813	.2021	.6228	.0436	.4644	.8851	.3059	.7266	.1474
764	.0983	.5191	.9399	.3606	.7814	.2022	.6229	.0437	.4644	.8852	.3060	.7267	.1475
767	.0984	.5192	.9399	.3607	.7815	.2022	.6230	.0438	.4645	.8853	.3061	.7268	.1476
420770	10.0985	10.5193	10.9400	11.3608	11.7816	12.2023	12.6231	13.0439	13.4646	13.8854	14.3062	14.7270	15.1477
773	.0986	.5193	.9401	.3609	.7816	.2024	.6232	.0440	.4647	.8855	.3063	.7271	.1478
776	.0986	.5194	.9402	.3610	.7817	.2025	.6233	.0441	.4648	.8856	.3064	.7272	.1479
779	.0987	.5195	.9403	.3610	.7818	.2026	.2634	.0441	.4649	.8857	.3065	.7273	.1480
782	.0988	.5196	.9403	.3611	.7819	.2027	.6235	.0442	.4650	.8858	.3066	.7274	.1482
420785	10.0988	10.5196	10.9404	11.3612	11.7820	12.2028	12.6236	13.0443	13.4651	13.8859	14.3067	14.7275	15.1483
788	.0989	.5197	.9405	.3613	.7821	.2029	.6236	.0444	.4652	.8860	.3068	.7276	.1484
791	.0990	.5198	.9406	.3614	.7821	.2029	.6237	.0445	.4653	.8861	.3069	.7277	.1485
794	.0991	.5199	.9406	.3614	.7822	.2030	.6238	.0446	.4654	.8862	.3070	.7278	.1486
797	.0991	.5199	.9407	.3615	.7823	.2031	.6239	.0447	.4655	.8863	.3071	.7279	.1487
420800	10.0992	10.5200	10.9408	11.3616	11.7824	12.2032	12.6240	13.0448	13.4656	13.8864	14.3072	14.7280	15.1488

MEGACYCLES PER SECOND

H A R M O N I C S

BASIC FREQ.	37	38	39	40	41	42	43	44	45	46	47	48	50
420500	15.5585	15.9790	16.3995	16.8200	17.2405	17.6610	18.0815	18.5020	18.9225	19.3430	19.7635	20.1840	21.0250
503	.5586	.9791	.3996	.8201	.2406	.6611	.0816	.5021	.9226	.3431	.7636	.1841	.0252
506	.5587	.9792	.3997	.8202	.2407	.6613	.0818	.5023	.9228	.3433	.7638	.1843	.0253
509	.5588	.9793	.3999	.8204	.2409	.6614	.0819	.5024	.9229	.3434	.7639	.1844	.0255
512	.5589	.9795	.4000	.8205	.2410	.6615	.0820	.5025	.9230	.3436	.7641	.1846	.0256
420515	15.5591	15.9796	16.4001	16.8206	17.2411	17.6616	18.0821	18.5027	18.9232	19.3437	19.7642	20.1847	21.0258
518	.5592	.9797	.4002	.8207	.2412	.6618	.0823	.5028	.9233	.3438	.7643	.1849	.0259
521	.5593	.9798	.4003	.8208	.2414	.6619	.0824	.5029	.9234	.3440	.7645	.1850	.0261
524	.5594	.9799	.4004	.8210	.2415	.6620	.0825	.5031	.9236	.3441	.7646	.1852	.0262
527	.5595	.9800	.4006	.8211	.2416	.6621	.0827	.5032	.9237	.3442	.7648	.1853	.0264
420530	15.5596	15.9801	16.4007	16.8212	17.2417	17.6623	18.0828	18.5033	18.9239	19.3444	19.7649	20.1854	21.0265
533	.5597	.9803	.4008	.8213	.2419	.6624	.0829	.5035	.9240	.3445	.7651	.1856	.0267
536	.5598	.9804	.4009	.8214	.2420	.6625	.0830	.5036	.9241	.3447	.7652	.1857	.0268
539	.5599	.9805	.4010	.8216	.2421	.6626	.0832	.5037	.9243	.3448	.7653	.1859	.0270
542	.5601	.9806	.4011	.8217	.2422	.6628	.0833	.5038	.9244	.3449	.7655	.1860	.0271
420545	15.5602	15.9807	16.4013	16.8218	17.2423	17.6629	18.0834	18.5040	18.9245	19.3451	19.7656	20.1862	21.0273
548	.5603	.9808	.4014	.8219	.2425	.6630	.0836	.5041	.9247	.3452	.7658	.1863	.0274
551	.5604	.9809	.4015	.8220	.2426	.6631	.0837	.5042	.9248	.3453	.7659	.1864	.0276
554	.5605	.9811	.4016	.8222	.2427	.6633	.0838	.5044	.9249	.3455	.7660	.1866	.0277
557	.5606	.9812	.4017	.8223	.2428	.6634	.0840	.5045	.9251	.3456	.7662	.1867	.0279
420560	15.5607	15.9813	16.4018	16.8224	17.2430	17.6635	18.0841	18.5946	18.9252	19.3458	19.7663	20.1869	21.0280
563	.5608	.9814	.4020	.8225	.2431	.6636	.0842	.5048	.9253	.3459	.7665	.1870	.0282
566	.5609	.5915	.4021	.8226	.2432	.6638	.0843	.5049	.9255	.3460	.7666	.1872	.0283
569	.5611	.9816	.4022	.8228	.2433	.6639	.0845	.5050	.9256	.3462	.7667	.1873	.0285
572	.5612	.9817	.4023	.8229	.2435	.6640	.0846	.5052	.9257	.3463	.7669	.1875	.0286
420575	15.5613	15.9819	16.4024	16.8230	17.2436	17.6642	18.0847	18.5053	18.9259	19.3465	19.7670	20.1876	21.0288
578	.5614	.9820	.4025	.8231	.2437	.6643	.0849	.5054	.9260	.3466	.7672	.1877	.0289
581	.5615	.9821	.4027	.8232	.2438	.6644	.0850	.5056	.9261	.3467	.7673	.1879	.0291
584	.5616	.9822	.4028	.8234	.2439	.6645	.0851	.5057	.9263	.3469	.7674	.1880	.0292
587	.5617	.9823	.4029	.8235	.2441	.6647	.0852	.5058	.9264	.3470	.7676	.1882	.0294
420590	15.5618	15.9824	16.4030	16.8236	17.2442	17.6648	18.0854	18.5060	18.9266	19.3471	19.7677	20.1883	21.0295
593	.5619	.9825	.4031	.8237	.2443	.6649	.0855	.5061	.9267	.3473	.7679	.1885	.0297
596	.5621	.9826	.4032	.8238	.2444	.6650	.0856	.5062	.9268	.3474	.7680	.1886	.0298
599	.5622	.9828	.4034	.8240	.2446	.6652	.0858	.5064	.9270	.3476	.7682	.1888	.0300
602	.5623	.9829	.4035	.8241	.2447	.6653	.0859	.5065	.9271	.3477	.7683	.1889	.0301
420605	15.5624	15.9830	16.4036	16.8242	17.2448	17.6654	18.0860	18.5066	18.9272	19.3478	19.7684	20.1890	21.0303
608	.5625	.9831	.4037	.8243	.2449	.6655	.0861	.5068	.9274	.3480	.7686	.1892	.0304
611	.5626	.9832	.4038	.8244	.2451	.6657	.0863	.5069	.9275	.3481	.7687	.1893	.0306
614	.5627	.9833	.4039	.8246	.2452	.6658	.0864	.5070	.9276	.3482	.7689	.1895	.0307
617	.5628	.9834	.4041	.8247	.2453	.6659	.0865	.5071	.9278	.3484	.7690	.1896	.0309
420620	15.5629	15.9836	16.4042	16.8248	17.2454	17.6660	18.0867	18.5073	18.9279	19.3485	19.7691	20.1898	21.0310
623	.5631	.9837	.4043	.8249	.2455	.6662	.0868	.5074	.9280	.3487	.7693	.1899	.0312
626	.5632	.9838	.4044	.8250	.2457	.6663	.0869	.5075	.9282	.3488	.7694	.1900	.0313
629	.5633	.9839	.4045	.8252	.2458	.6664	.0870	.5077	.9283	.3489	.7696	.1902	.0315
632	.5634	.9840	.4046	.8253	.2459	.6665	.0872	.5078	.9284	.3491	.7697	.1903	.0316
420635	15.5635	15.9841	16.4048	16.8254	17.2460	17.6667	18.0873	18.5079	18.9286	19.3492	19.7698	20.1905	21.0318
638	.5636	.9842	.4049	.8255	.2462	.6668	.0874	.5081	.9287	.3493	.7700	.1906	.0319
641	.5637	.9844	.4050	.8256	.2463	.6669	.0876	.5082	.9288	.3495	.7701	.1908	.0321
644	.5638	.9845	.4051	.8258	.2464	.6670	.0877	.5083	.9290	.3496	.7703	.1909	.0322
647	.5639	.9846	.4052	.8259	.2465	.6672	.0878	.5085	.9291	.3498	.7704	.1911	.0324
420650	15.5641	15.9847	16.4054	16.8260	17.2467	17.6673	18.0880	18.5086	18.9293	19.3499	19.7706	20.1912	21.0325
653	.5642	.9848	.4055	.8261	.2468	.6674	.0881	.5087	.9294	.3500	.7707	.1913	.0327
656	.5643	.9849	.4056	.8262	.2469	.6676	.0882	.5089	.9295	.3502	.7708	.1915	.0328
659	.5644	.9850	.4057	.8264	.2470	.6677	.0883	.5090	.9297	.3503	.7710	.1916	.0330
662	.5645	.9852	.4058	.8265	.2471	.6678	.0885	.5091	.9298	.3505	.7711	.1918	.0331
420665	15.5646	15.9853	16.4059	16.8266	17.2473	17.6679	18.0886	18.5093	18.9299	19.3506	19.7713	20.1919	21.0333
668	.5647	.9854	.4061	.8267	.2474	.6681	.0887	.5094	.9301	.3507	.7714	.1921	.0334
671	.5648	.9855	.4062	.8268	.2475	.6682	.0889	.5095	.9302	.3509	.7715	.1922	.0336
674	.5649	.9856	.4063	.8270	.2476	.6683	.0890	.5097	.9303	.3510	.7717	.1924	.0337
677	.5650	.9857	.4064	.8271	.2478	.6684	.0891	.5098	.9305	.3511	.7718	.1925	.0339
420680	15.5652	15.9858	16.4065	16.8272	17.2479	17.6686	18.0892	18.5099	18.9306	19.3513	19.7720	20.1926	21.0340
683	.5653	.9860	.4066	.8273	.2480	.6687	.0894	.5101	.9307	.3514	.7721	.1928	.0342
686	.5654	.9861	.4068	.8274	.2481	.6688	.0895	.5102	.9309	.3516	.7722	.1929	.0343
689	.5655	.9862	.4069	.8276	.2482	.6689	.0896	.5103	.9310	.3517	.7724	.1931	.0345
692	.5656	.9863	.4070	.8277	.2484	.6691	.0898	.5104	.9311	.3518	.7725	.1932	.0346
420695	15.5657	15.9864	16.4071	16.8278	17.2485	17.6692	18.0899	18.5106	18.9313	19.3520	19.7727	20.1934	21.0348
698	.5658	.9865	.4072	.8279	.2486	.6693	.0900	.5107	.9314	.3521	.7728	.1935	.0349
701	.5659	.9866	.4073	.8280	.2487	.6694	.0901	.5108	.9315	.3522	.7729	.1936	.0351
704	.5660	.9868	.4075	.8282	.2489	.6696	.0903	.5110	.9317	.3524	.7731	.1938	.0352
707	.5662	.9869	.4076	.8283	.2490	.6697	.0904	.5111	.9318	.3525	.7732	.1939	.0354
420710	15.5663	15.9870	16.4077	16.8284	17.2491	17.6698	18.0905	18.5112	18.9320	19.3527	19.7734	20.1941	21.0355
713	.5664	.9871	.4078	.8285	.2492	.6699	.0907	.5114	.9321	.3528	.7735	.1942	.0357
716	.5665	.9872	.4079	.8286	.2494	.6701	.0908	.5115	.9322	.3529	.7737	.1944	.0358
719	.5666	.9873	.4080	.8288	.2495	.6702	.0909	.5116	.9324	.3531	.7738	.1945	.0360
722	.5667	.9874	.4082	.8289	.2496	.6703	.0910	.5118	.9325	.3532	.7739	.1947	.0361
420725	15.5668	15.9876	16.4083	16.8290	17.2497	17.6705	18.0912	18.5119	18.9326	19.3534	19.7741	20.1948	21.0363
728	.5669	.9877	.4084	.8291	.2498	.6706	.0913	.5120	.9328	.3535	.7742	.1949	.0364
731	.5670	.9878	.4085	.8292	.2500	.6707	.0914	.5122	.9329	.3536	.7744	.1951	.0366
734	.5672	.9879	.4086	.8294	.2501	.6708	.0916	.5123	.9330	.3538	.7745	.1952	.0367
737	.5673	.9880	.4087	.8295	.2502	.6710	.0917	.5124	.9332	.3539	.7746	.1954	.0369
420740	15.5674	15.9881	16.4089	16.8296	17.2503	17.6711	18.0918	18.5126	18.9333	19.3540	19.7748	20.1955	21.0370
743	.5675	.9882	.4090	.8297	.2505	.6712	.0919	.5127	.9334	.3542	.7749	.1957	.0372
746	.5676	.9883	.4091	.8298	.2506	.6713	.0921	.5128	.9336	.3543	.7751	.1958	.0373
749	.5677	.9885	.4092	.8300	.2507	.6715	.0922	.5130	.9337	.3545	.7752	.1960	.0375
752	.5678	.9886	.4093	.8301	.2508	.6716	.0923	.5131	.9338	.3546	.7753	.1961	.0376
420755	15.5679	15.9887	16.4094	16.8302	17.2510	17.6717	18.0925	18.5132	18.9340	19.3547	19.7755	20.1962	21.0378
758	.5680	.9888	.4096	.8303	.2511	.6718	.0926	.5134	.9341	.3549	.7756	.1964	.0379
761	.5682	.9889	.4097	.8304	.2512	.6720	.0927	.5135	.9342	.3550	.7758	.1965	.0381
764	.5683	.9890	.4098	.8306	.2513	.6721	.0929	.5136	.9344	.3551	.7759	.1967	.0382
767	.5684	.9891	.4099	.8307	.2514	.6722	.0930	.5137	.8345	.3553	.7760	.1968	.0384
420770	15.5685	15.9893	16.4100	16.8308	17.2516	17.6723	18.0931	18.5139	18.9347	19.3554	19.7762	20.1970	21.0385
773	.5686	.9894	.4101	.8309	.2517	.6725	.0932	.5140	.9348	.3556	.7763	.1971	.0387
776	.5687	.9895	.4103	.8310	.2518	.6726	.0934	.5141	.9349	.3557	.7765	.1972	.0388
779	.5688	.9896	.4104	.8312	.2519	.6727	.0935	.5143	.9351	.3558	.7766	.1974	.0390
782	.5689	.9897	.4105	.8313	.2521	.6728	.0936	.5144	.9352	.3560	.7768	.1975	.0391
420785	15.5690	15.9898	16.4106	16.8314	17.2522	17.6730	18.0938	18.5145	18.9353	19.3561	19.7769	20.1977	21.0393
788	.5692	.9899	.4107	.8315	.2523	.6731	.0939	.5147	.9355	.3562	.7770	.1978	.0394
791	.5693	.9901	.4108	.8316	.2524	.6732	.0940	.5148	.9356	.3564	.7772	.1980	.0396
794	.5694	.9902	.4110	.8318	.2526	.6733	.0941	.5149	.9357	.3565	.7773	.1981	.0397
797	.5695	.9903	.4111	.8319	.2527	.6735	.0943	.5151	.9359	.3567	.7775	.1983	.0399
420800	15.5696	15.9904	16.4112	16.8320	17.2528	17.6736	18.0944	18.5152	18.9360	19.3568	19.7776	20.1984	21.0400

MEGACYCLES PER SECOND

HARMONICS

BASIC FREQ.	24	25	26	27	28	29	30	31	32	33	34	35	36
420800	10.0992	10.5200	10.9408	11.3616	11.7824	12.2032	12.6240	13.0448	13.4656	13.8864	14.3072	14.7280	15.1488
803	.0993	.5201	.9409	.3617	.7825	.2033	.6241	.0449	.4657	.8865	.3073	.7281	.1489
806	.0993	.5202	.9410	.3618	.7826	.2034	.6242	.0450	.4658	.8866	.3074	.7282	.1490
809	.0994	.5202	.9410	.3618	.7827	.2035	.6243	.0451	.4659	.8867	.3075	.7283	.1491
812	.0995	.5203	.9411	.3619	.7827	.2035	.6244	.0452	.4660	.8868	.3076	.7284	.1492
420815	10.0996	10.5204	10.9412	11.3620	11.7828	12.2036	12.6245	13.0453	13.4661	13.8869	14.3077	14.7285	15.1493
818	.0996	.5205	.9413	.3621	.7829	.2037	.6245	.0454	.4662	.8870	.3078	.7286	.1494
821	.0997	.5205	.9413	.3622	.7830	.2038	.6246	.0455	.4663	.8871	.3079	.7287	.1496
824	.0998	.5206	.9414	.3622	.7831	.2039	.6247	.0455	.4664	.8872	.3080	.7288	.1497
827	.0998	.5207	.9415	.3623	.7832	.2040	.6248	.0456	.4665	.8873	.3081	.7289	.1498
420830	10.0999	10.5208	10.9416	11.3624	11.7832	12.2041	12.6249	13.0457	13.4666	13.8874	14.3082	14.7291	15.1499
833	.1000	.5208	.9417	.3625	.7833	.2042	.6250	.0458	.4667	.8875	.3083	.7292	.1500
836	.1001	.5209	.9417	.3626	.7834	.2042	.6251	.0459	.4668	.8876	.3084	.7293	.1501
839	.1001	.5210	.9418	.3627	.7835	.2043	.6252	.0460	.4668	.8877	.3085	.7294	.1502
842	.1002	.5211	.9419	.3627	.7836	.2044	.6253	.0461	.4669	.8878	.3086	.7295	.1503
420845	10.1003	10.5211	10.9420	11.3628	11.7837	12.2045	12.6254	13.0462	13.4670	13.8879	14.3087	14.7296	15.1504
848	.1004	.5212	.9420	.3629	.7837	.2046	.6254	.0463	.4671	.8880	.3088	.7297	.1505
851	.1004	.5213	.9421	.3630	.7838	.2047	.6255	.0464	.4672	.8881	.3089	.7298	.1506
854	.1005	.5214	.9422	.3631	.7839	.2048	.6256	.0465	.4673	.8882	.3090	.7299	.1507
857	.1006	.5214	.9423	.3631	.7840	.2049	.6257	.0466	.4674	.8883	.3091	.7300	.1509
420860	10.1006	10.5215	10.9424	11.3632	11.7841	12.2049	12.6258	13.0467	13.4675	13.8884	14.3092	14.7301	15.1510
863	.1007	.5216	.9424	.3633	.7842	.2050	.6259	.0468	.4676	.8885	.3093	.7203	.1511
866	.1008	.5217	.9425	.3634	.7842	.2051	.6260	.0468	.4677	.8886	.3094	.7303	.1512
869	.1009	.5217	.9426	.3635	.7843	.2052	.6261	.0469	.4678	.8887	.3095	.7304	.1513
872	.1009	.5218	.9427	.3635	.7844	.2053	.6262	.0470	.4679	.8888	.3096	.7305	.1514
420875	10.1010	10.5219	10.9428	11.3636	11.7845	12.2054	12.6263	13.0471	13.4680	13.8889	14.3098	14.7306	15.1515
878	.1011	.5220	.9428	.3637	.7846	.2055	.6263	.0472	.4681	.8890	.3099	.7307	.1516
881	.1011	.5220	.9429	.3638	.7847	.2055	.6264	.0473	.4682	.8891	.3100	.7308	.1517
884	.1012	.5221	.9430	.3639	.7848	.2056	.6265	.0474	.4683	.8892	.3101	.7309	.1518
887	.1013	.5222	.9431	.3639	.7848	.2057	.6266	.0475	.4684	.8893	.3102	.7310	.1519
420890	10.1014	10.5223	10.9431	11.3640	11.7849	12.2058	12.6267	13.0476	13.4685	13.8894	14.3103	14.7312	15.1520
893	.1014	.5223	.9432	.3641	.7850	.2059	.6268	.0477	.4686	.8895	.3104	.7313	.1521
896	.1015	.5224	.9433	.3642	.7851	.2060	.6269	.0478	.4687	.8896	.3105	.7314	.1523
899	.1016	.5225	.9434	.3643	.7852	.2061	.6270	.0479	.4688	.8897	.3106	.7315	.1524
902	.1016	.5226	.9435	.3644	.7853	.2062	.6271	.0480	.4689	.8898	.3107	.7316	.1525
420905	10.1017	10.5226	10.9435	11.3644	11.7853	12.2062	12.6272	13.0481	13.4690	13.8899	14.3108	14.7317	15.1526
908	.1018	.5227	.9436	.3645	.7854	.2063	.6272	.0481	.4691	.8900	.3109	.7318	.1527
911	.1019	.5228	.9437	.3646	.7855	.2064	.6273	.0482	.4692	.8901	.3110	.7319	.1528
914	.1019	.5229	.9438	.3647	.7856	.2065	.6274	.0483	.4692	.8902	.3111	.7320	.1529
917	.1020	.5229	.9438	.3648	.7857	.2066	.6275	.0484	.4693	.8903	.3112	.7321	.1530
420920	10.1021	10.5230	10.9439	11.3648	11.7858	12.2067	12.6276	13.0485	13.4694	13.8904	14.3113	14.7322	15.1531
923	.1022	.5231	.9440	.3649	.7858	.2068	.6277	.0486	.4695	.8905	.3114	.7323	.1532
926	.1022	.5232	.9441	.3650	.7859	.2069	.6278	.0487	.4696	.8906	.3115	.7324	.1533
929	.1023	.5232	.9442	.3651	.7860	.2069	.6279	.0488	.4697	.8907	.3116	.7325	.1534
932	.1024	.5233	.9442	.3652	.7861	.2070	.6280	.0489	.4698	.8908	.3117	.7326	.1536
420935	10.1024	10.5234	10.9443	11.3652	11.7862	12.2071	12.6281	13.0490	13.4699	13.8909	14.3118	14.7327	15.1537
938	.1025	.5235	.9444	.3653	.7863	.2072	.6281	.0491	.4700	.8910	.3119	.7328	.1538
941	.1026	.5235	.9445	.3654	.7863	.2073	.6282	.0492	.4701	.8911	.3120	.7329	.1539
944	.1027	.5236	.9445	.3655	.7864	.2074	.6283	.0493	.4702	.8912	.3121	.7330	.1540
947	.1027	.5237	.9446	.3656	.7865	.2075	.6284	.0494	.4703	.8913	.3122	.7331	.1541
420950	10.1028	10.5238	10.9447	11.3657	11.7866	12.2076	12.6285	13.0495	13.4704	13.8914	14.3123	14.7333	15.1542
953	.1029	.5238	.9448	.3657	.7867	.2076	.6286	.0495	.4705	.8914	.3124	.7334	.1543
956	.1029	.5239	.9449	.3658	.7868	.2077	.6287	.0496	.4706	.8915	.3125	.7335	.1544
959	.1030	.5240	.9449	.3659	.7869	.2078	.6288	.0497	.4707	.8916	.3126	.7336	.1545
962	.1031	.5241	.9450	.3660	.7869	.2079	.6289	.0498	.4708	.8917	.3127	.7337	.1546
420965	10.1032	10.5241	10.9451	11.3661	11.7870	12.2080	12.6290	13.0499	13.4709	13.8918	14.3128	14.7338	15.1547
968	.1032	.5242	.9452	.3661	.7871	.2081	.6290	.0500	.4710	.8919	.3129	.7339	.1548
971	.1033	.5243	.9452	.3662	.7872	.2082	.6291	.0501	.4711	.8920	.3130	.7340	.1550
974	.1034	.5244	.9453	.3663	.7873	.2082	.6292	.0502	.4712	.8921	.3131	.7341	.1551
977	.1034	.5244	.9454	.3664	.7874	.2083	.6293	.0503	.4713	.8922	.3132	.7342	.1552
420980	10.1035	10.5245	10.9455	11.3665	11.7874	12.2084	12.6294	13.0504	13.4714	13.8923	14.3133	14.7343	15.1553
983	.1036	.5246	.9456	.3665	.7875	.2085	.6295	.0505	.4715	.8924	.3134	.7344	.1554
986	.1037	.5247	.9456	.3666	.7876	.2086	.6296	.0506	.4716	.8925	.3135	.7345	.1555
989	.1037	.5247	.9457	.3667	.7877	.2087	.6297	.0507	.4716	.8926	.3136	.7346	.1556
992	.1038	.5248	.9458	.3668	.7878	.2088	.6298	.0508	.4717	.8927	.3137	.7347	.1557
420995	10.1039	10.5249	10.9459	11.3669	11.7879	12.2089	12.6299	13.0508	13.4718	13.8928	14.3138	14.7348	15.1558
998	.1040	.5250	.9459	.3669	.7879	.2089	.6299	.0509	.4719	.8929	.3139	.7349	.1559
421001	.1040	.5250	.9460	.3670	.7880	.2090	.6300	.0510	.4720	.8930	.3140	.7350	.1560
004	.1041	.5251	.9461	.3671	.7881	.2091	.6301	.0511	.4721	.8931	.3141	.7351	.1561
007	.1042	.5252	.9462	.3672	.7882	.2092	.6302	.0512	.4722	.8932	.3142	.7352	.1563
421010	10.1042	10.5253	10.9463	11.3673	11.7883	12.2093	12.6303	13.0513	13.4723	13.8933	14.3143	14.7354	15.1564
013	.1043	.5253	.9463	.3674	.7884	.2094	.6304	.0514	.4724	.8934	.3144	.7355	.1565
016	.1044	.5254	.9464	.3674	.7884	.2095	.6305	.0515	.4725	.8935	.3145	.7356	.1566
019	.1045	.5255	.9465	.3675	.7885	.2096	.6306	.0516	.4726	.8936	.3146	.7357	.1567
022	.1045	.5256	.9466	.3676	.7886	.2096	.6307	.0517	.4727	.8937	.3147	.7358	.1568
421025	10.1046	10.5256	10.9467	11.3677	11.7887	12.2097	12.6308	13.0518	13.4728	13.8938	14.3149	14.7359	15.1569
028	.1047	.5257	.9467	.3678	.7888	.2098	.6308	.0519	.4729	.8939	.3150	.7360	.1570
031	.1047	.5258	.9468	.3678	.7889	.2099	.6309	.0520	.4730	.8940	.3151	.7361	.1571
034	.1048	.5259	.9469	.3679	.7890	.2100	.6310	.0521	.4731	.8941	.3152	.7362	.1572
037	.1049	.5259	.9470	.3680	.7890	.2101	.6311	.0521	.4732	.8942	.3153	.7363	.1573
421040	10.1050	10.5260	10.9470	11.3681	11.7891	12.2102	12.6312	13.0522	13.4733	13.8943	14.3154	14.7364	15.1574
043	.1050	.5261	.9471	.3682	.7892	.2102	.6313	.0523	.4734	.8944	.3155	.7465	.1575
046	.1051	.5262	.9472	.3682	.7893	.2103	.6314	.0524	.4735	.8945	.3156	.7366	.1577
049	.1052	.5262	.9473	.3683	.7894	.2104	.6315	.0525	.4736	.8946	.3157	.7367	.1578
052	.1052	.5263	.9474	.3684	.7895	.2105	.6316	.0526	.4737	.8947	.3158	.7368	.1579
421055	10.1053	10.5264	10.9474	11.3685	11.7895	12.2106	12.6317	13.0527	13.4738	13.8948	14.3159	14.7369	15.1580
058	.1054	.5265	.9475	.3686	.7896	.2107	.6317	.0528	.4739	.8949	.3160	.7370	.1581
061	.1055	.5265	.9476	.3686	.7897	.2108	.6318	.0529	.4740	.8950	.3161	.7371	.1582
064	.1055	.5266	.9477	.3687	.7898	.2109	.6319	.0530	.4740	.8951	.3162	.7372	.1583
067	.1056	.5267	.9477	.3688	.7899	.2109	.6320	.0531	.4741	.8952	.3163	.7373	.1584
421070	10.1057	10.5268	10.9478	11.3689	11.7900	12.2110	12.6321	13.0532	13.4742	13.8953	14.3164	14.7375	15.1585
073	.1058	.5268	.9479	.3690	.7900	.2111	.6322	.0533	.4743	.8954	.3165	.7376	.1586
076	.1058	.5269	.9480	.3691	.7901	.2112	.6323	.0534	.4744	.8955	.3166	.7377	.1587
079	.1059	.5270	.9481	.3691	.7902	.2113	.6324	.0534	.4745	.8956	.3167	.7378	.1588
082	.1060	.5271	.9481	.3692	.7903	.2114	.6325	.0535	.4746	.8957	.3168	.7379	.1590
421085	10.1060	10.5271	10.9482	11.3693	11.7904	12.2115	12.6326	13.0536	13.4747	13.8958	14.3169	14.7380	15.1591
088	.1061	.5272	.9483	.3694	.7905	.2116	.6326	.0537	.4748	.8959	.3170	.7381	.1592
091	.1062	.5273	.9484	.3695	.7905	.2116	.6327	.0538	.4749	.8960	.3171	.7382	.1593
094	.1063	.5274	.9484	.3695	.7906	.2117	.6328	.0539	.4750	.8961	.3172	.7383	.1594
097	.1063	.5274	.9485	.3696	.7907	.2118	.6329	.0540	.4751	.8962	.3173	.7384	.1595
421100	10.1064	10.5275	10.9486	11.3697	11.7908	12.2119	12.6330	13.0541	13.4752	13.8963	14.3174	14.7385	15.1596

MEGACYCLES PER SECOND

HARMONICS

BASIC FREQ.	37	38	39	40	41	42	43	44	45	46	47	48	50
420800	15.5696	15.9904	16.4112	16.8320	17.2528	17.6736	18.0944	18.5152	18.9360	19.3568	19.7776	20.1984	21.0400
803	.5697	.9905	.4113	.8321	.2529	.6737	.0945	.5153	.9361	.3569	.7777	.1985	.0402
806	.5698	.9906	.4114	.8322	.2530	.6739	.0947	.5155	.9363	.3571	.7779	.1987	.0403
809	.5699	.9907	.4116	.8324	.2532	.6740	.0948	.5156	.9364	.3572	.7780	.1988	.0405
812	.5700	.9909	.4117	.8325	.2533	.6741	.0949	.5157	.9365	.3574	.7782	.1990	.0406
420815	15.5702	15.9910	16.4118	16.8326	17.2534	17.6742	18.0950	18.5159	18.9367	19.3575	19.7783	20.1991	21.0408
818	.5703	.9911	.4119	.8327	.2535	.6744	.0952	.5160	.9368	.3576	.7784	.1993	.0409
821	.5704	.9912	.4120	.8328	.2537	.6745	.0953	.5161	.9369	.3578	.7786	.1994	.0411
824	.5705	.9913	.4121	.8330	.2538	.6746	.0954	.5163	.9371	.3579	.7787	.1996	.0412
827	.5706	.9914	.4123	.8331	.2539	.6747	.0956	.5164	.9372	.3580	.7789	.1997	.0414
420830	15.5707	15.9915	16.4124	16.8332	17.2540	17.6749	18.0957	18.5165	18.9374	19.3582	19.7790	20.1998	21.0415
833	.5708	.9917	.4125	.8333	.2542	.6750	.0958	.5167	.9375	.3583	.7792	.2000	.0417
836	.5709	.9918	.4126	.8334	.2543	.6751	.0959	.5168	.9376	.3585	.7793	.2001	.0418
839	.5710	.9919	.4127	.8336	.2544	.6752	.0961	.5169	.9378	.3586	.7794	.2003	.0420
842	.5712	.9920	.4128	.8337	.2545	.6754	.0962	.5170	.9379	.3587	.7796	.2004	.0421
420845	15.5713	15.9921	16.4130	16.8338	17.2546	17.6755	18.0963	18.5172	18.9380	19.3589	19.7797	20.2006	21.0423
848	.5714	.9922	.4131	.8339	.2548	.6756	.0965	.5173	.9382	.3590	.7799	.2007	.0424
851	.5715	.9923	.4132	.8340	.2549	.6757	.0966	.5174	.9383	.3591	.7800	.2008	.0426
854	.5716	.9925	.4133	.8342	.2550	.6759	.0967	.5176	.9384	.3593	.7801	.2010	.0427
857	.5717	.9926	.4134	.8343	.2551	.6760	.0969	.5177	.9386	.3594	.7803	.2011	.0429
420860	15.5718	15.9927	16.4135	16.8344	17.2553	17.6761	18.0970	18.5178	18.9387	19.3596	19.7804	20.2013	21.0430
863	.5719	.9928	.4137	.8345	.2554	.6762	.0971	.5180	.9388	.3597	.7806	.2014	.0432
866	.5720	.9929	.4138	.8346	.2555	.6764	.0972	.5181	.9390	.3598	.7807	.2016	.0433
869	.5722	.9930	.4139	.8348	.2556	.6765	.0974	.5182	.9391	.3600	.7808	.2017	.0435
872	.5723	.9931	.4140	.8349	.2558	.6766	.0975	.5184	.9392	.3601	.7810	.2019	.0436
420875	15.5724	15.9933	16.4141	16.8350	17.2559	17.6768	18.9976	18.5185	18.9394	19.3603	19.7811	20.2020	21.0438
878	.5725	.9934	.4142	.8351	.2560	.6769	.0978	.5186	.9395	.3604	.7813	.0221	.0439
881	.5726	.9935	.4144	.8352	.2561	.6770	.0979	.5188	.9396	.3605	.7814	.2023	.0441
884	.5727	.9936	.4145	.8354	.2562	.6771	.0980	.5189	.9398	.3607	.7815	.2024	.0442
887	.5728	.9937	.4146	.8355	.2564	.6773	.0981	.5190	.9399	.3608	.7817	.2026	.0444
420890	15.5729	15.9938	16.4147	16.8356	17.2565	17.6774	18.0983	18.5192	18.9401	19.3609	19.7818	20.2027	21.0445
893	.5730	.9939	.4148	.8357	.2566	.6775	.0984	.5193	.9402	.3611	.7820	.2029	.0447
896	.5732	.9940	.4149	.8358	.2567	.6776	.0985	.5194	.9403	.3612	.7821	.2030	.0448
899	.5733	.9942	.4151	.8360	.2569	.6778	.0987	.5196	.9405	.3614	.7823	.2032	.0450
902	.5734	.9943	.4152	.8361	.2570	.6779	.0988	.5197	.9406	.3615	.7824	.2033	.0451
420905	15.5735	15.9944	16.4153	16.8362	17.2571	17.6780	18.0989	18.5198	18.9407	19.3616	19.7825	20.2034	21.0453
908	.5736	.9945	.4154	.8363	.2572	.6781	.0990	.5200	.9409	.3618	.7827	.2036	.0454
911	.5737	.9946	.4155	.8364	.2574	.6783	.0992	.5201	.9410	.3619	.7828	.2037	.0456
914	.5738	.9947	.4156	.8366	.2575	.6784	.0993	.5202	.9411	.3620	.7830	.2039	.0457
917	.5739	.9948	.4158	.8367	.2576	.6785	.0994	.5203	.9413	.3622	.7831	.2040	.0459
420920	15.5740	15.9950	16.4159	16.8368	17.2577	17.6786	18.0996	18.5205	18.9414	19.3623	19.7832	20.2042	21.0460
923	.5742	.9951	.4160	.8369	.2578	.6788	.0997	.5206	.9415	.3625	.7834	.2043	.0462
926	.5743	.9952	.4161	.8370	.2580	.6789	.0998	.5207	.9417	.3626	.7835	.2044	.0463
929	.5744	.9953	.4162	.8372	.2581	.6790	.0999	.5209	.9418	.3627	.7837	.2046	.0465
932	.5745	.9954	.4163	.8373	.2582	.6791	.1001	.5210	.9419	.3629	.7838	.2047	.0466
420935	15.5746	15.9955	16.4165	16.8374	17.2583	17.6793	18.1002	18.5211	18.9421	19.3630	19.7839	20.2049	21.0468
938	.5747	.9956	.4166	.8375	.2585	.6794	.1003	.5213	.9422	.3631	.7841	.2050	.0469
941	.5748	.9958	.4167	.8376	.2586	.6795	.1005	.5214	.9423	.3633	.7842	.2052	.0471
944	.5749	.9959	.4168	.8378	.2587	.6796	.1006	.5215	.9425	.3634	.7844	.2053	.0472
947	.5750	.9960	.4169	.8379	.2588	.6798	.1007	.5217	.9426	.3636	.7845	.2055	.0474
420950	15.5752	15.9961	16.4171	16.8380	17.2590	17.6799	18.1009	18.5218	18.9428	19.3637	19.7847	20.2056	21.0475
953	.5753	.9962	.4172	.8381	.2591	.6800	.1010	.5219	.9429	.3638	.7848	.2057	.0477
956	.5754	.9963	.4173	.8382	.2592	.6802	.1011	.5221	.9430	.3640	.7849	.2059	.0478
959	.5755	.9964	.4174	.8384	.2593	.6803	.1012	.5222	.9432	.3641	.7851	.2060	.0480
962	.5756	.9966	.4175	.8385	.2594	.6804	.1014	.5223	.9433	.3643	.7852	.2062	.0481
420965	15.5757	15.9967	16.4176	16.8386	17.2596	17.6805	18.1015	18.5225	18.9434	19.3644	19.7854	20.2063	21.0483
968	.5758	.9968	.4178	.8387	.2597	.6807	.1016	.5226	.9436	.3645	.7855	.2065	.0484
971	.5759	.9969	.4179	.8388	.2598	.6808	.1018	.5227	.9437	.3647	.7856	.2066	.0486
974	.5760	.9970	.4180	.8390	.2599	.6809	.1019	.5229	.9438	.3648	.7858	.2068	.0487
977	.5761	.9971	.4181	.8391	.2601	.6810	.1020	.5230	.9440	.3649	.7859	.2069	.0489
420980	15.5763	15.9972	16.4182	16.8392	17.2602	17.6812	18.1021	18.5231	18.9441	19.3651	19.7861	20.2070	21.0490
983	.5764	.9974	.4183	.8393	.2603	.6813	.1023	.5233	.9442	.3652	.7862	.2072	.0492
986	.5765	.9975	.4185	.8394	.2604	.6814	.1024	.5234	.9444	.3654	.7863	.2073	.0493
989	.5766	.9976	.4186	.8396	.2605	.6815	.1025	.5235	.9445	.3655	.7865	.2075	.0495
992	.5767	.9977	.4187	.8397	.2607	.6817	.1027	.5236	.9446	.3656	.7866	.2076	.0496
420995	15.5768	15.9978	16.4188	16.8398	17.2608	17.6818	18.1028	18.5238	18.9448	19.3658	19.7868	20.2078	21.0498
998	.5769	.9979	.4189	.8399	.2609	.6819	.1029	.5239	.9449	.3659	.7869	.2079	.0499
421001	.5770	.9980	.4190	.8400	.2610	.6820	.1030	.5240	.9450	.3660	.7870	.2080	.0501
004	.5771	.9982	.4192	.8402	.2612	.6822	.1032	.5242	.9452	.3662	.7872	.2082	.0502
007	.5773	.9983	.4193	.8403	.2613	.6823	.1033	.5243	.9453	.3663	.7873	.2083	.0504
421010	15.5774	15.9984	16.4194	16.8404	17.2614	17.6824	18.1034	18.5244	18.9455	19.3665	19.7875	20.2085	21.0505
013	.5775	.9985	.4195	.8405	.2615	.6825	.1036	.5246	.9456	.3666	.7876	.2086	.0507
016	.5776	.9986	.4196	.8406	.2617	.6827	.1037	.5247	.9457	.3667	.7878	.2088	.0508
019	.5777	.9987	.4197	.8408	.2618	.6828	.1038	.5248	.9459	.3669	.7879	.2089	.0510
022	.5778	.9988	.4199	.8409	.2619	.6829	.1039	.5250	.9460	.3670	.7880	.2091	.0511
421025	15.5779	15.9990	16.4200	16.8410	17.2620	17.6831	18.1041	18.5251	18.9461	19.3672	19.7882	20.2092	21.0513
028	.5780	.9991	.4201	.8411	.2621	.6832	.1042	.5252	.9463	.3673	.7883	.2093	.0514
031	.5781	.9992	.4202	.8412	.2623	.6833	.1043	.5254	.9464	.3674	.7885	.2095	.0516
034	.5783	.9993	.4203	.8414	.2624	.6834	.1045	.5255	.9465	.3676	.7886	.2096	.0517
037	.5784	.9994	.4204	.8415	.2625	.6836	.1046	.5256	.9467	.3677	.7887	.2098	.0519
421040	15.5785	15.9995	16.4206	16.8416	17.2626	17.6837	18.1047	18.5258	18.9468	19.3678	19.7889	20.2099	21.0520
043	.5786	.9996	.4207	.8417	.2628	.6838	.1048	.5259	.9469	.3680	.7890	.2101	.0522
046	.5787	.9997	.4208	.8418	.2629	.6839	.1050	.5260	.9471	.3681	.7892	.2102	.0523
049	.5788	.9999	.4209	.8420	.2630	.6841	.1051	.5262	.9472	.3683	.7893	.2104	.0525
052	.5789	16.0000	.4210	.8421	.2631	.6842	.1052	.5263	.9473	.3684	.7894	.2105	.0526
421055	15.5790	16.0001	16.4211	16.8422	17.2633	17.6843	18.1054	18.5264	18.9475	19.3685	19.7896	20.2106	21.0528
058	.5791	.0002	.4213	.8423	.2634	.6844	.1055	.5266	.9476	.3687	.7897	.2108	.0529
061	.5793	.0003	.4214	.8424	.2635	.6846	.1056	.5267	.9477	.3688	.7899	.2109	.0531
064	.5794	.0004	.4215	.8426	.2636	.6847	.1058	.5268	.9479	.3689	.7900	.2111	.0532
067	.5795	.0005	.4216	.8427	.2637	.6848	.1059	.5269	.9480	.3691	.7901	.2112	.0534
421070	15.5796	16.0007	16.4217	16.8428	17.2639	17.6849	18.1060	18.5271	18.9482	19.3692	19.7903	20.2114	21.0535
073	.5797	.0008	.4218	.8429	.2640	.6851	.1061	.5272	.9483	.3694	.7904	.2115	.0537
076	.5798	.0009	.4220	.8430	.2641	.6852	.1063	.5273	.9484	.3695	.7906	.2116	.0538
079	.5799	.0010	.4221	.8432	.2642	.6853	.1064	.5275	.9486	.3696	.7907	.2118	.0540
082	.5800	.0011	.4222	.8433	.2644	.6854	.1065	.5276	.9487	.3698	.7909	.2119	.0541
421085	15.5801	16.0012	16.4223	16.8434	17.2645	17.6856	18.1067	18.5277	18.9488	19.3699	19.7910	20.2121	21.0543
088	.5803	.0013	.4224	.8435	.2646	.6857	.1068	.5279	.9490	.3700	.7911	.2122	.0544
091	.5804	.0015	.4225	.8436	.2647	.6858	.1069	.5280	.9491	.3702	.7913	.2124	.0546
094	.5805	.0016	.4227	.8438	.2649	.6859	.1070	.5281	.9492	.3703	.7914	.2125	.0547
097	.5806	.0017	.4228	.8439	.2650	.6861	.1072	.5283	.9494	.3705	.7916	.2127	.0549
421100	15.5807	16.0018	16.4229	16.8440	17.2651	17.6862	18.1073	18.5284	18.9495	19.3706	19.7917	20.2128	21.0550

MEGACYCLES PER SECOND

HARMONICS

BASIC FREQ.	24	25	26	27	28	29	30	31	32	33	34	35	36
421100	10.1064	10.5275	10.9486	11.3697	11.7908	12.2119	12.6330	13.0541	13.4752	13.8963	14.3174	14.7385	15.1596
103	.1065	.5276	.9487	.3698	.7909	.2120	.6331	.0542	.4753	.8964	.3175	.7386	.1597
106	.1065	.5277	.9488	.3699	.7910	.2121	.6332	.0543	.4754	.8965	.3176	.7387	.1598
109	.1066	.5277	.9488	.3699	.7911	.2122	.6333	.0544	.4755	.8966	.3177	.7388	.1599
112	.1067	.5278	.9489	.3700	.7911	.2122	.6334	.0545	.4756	.8967	.3178	.7389	.1600
421115	10.1068	10.5279	10.9490	11.3701	11.7912	12.2123	12.6335	13.0546	13.4757	13.8968	14.3179	14.7390	15.1601
118	.1068	.5280	.9491	.3702	.7913	.2124	.6335	.0547	.4758	.8969	.3180	.7391	.1602
121	.1069	.5280	.9491	.3703	.7914	.2125	.6336	.0548	.4759	.8970	.3181	.7392	.1604
124	.1070	.5281	.9492	.3703	.7915	.2126	.6337	.0548	.4760	.8971	.3182	.7393	.1605
127	.1070	.5282	.9493	.3704	.7916	.2127	.6338	.0549	.4761	.8972	.3183	.7394	.1606
421130	10.1071	10.5283	10.9494	11.3705	11.7916	12.2128	12.6339	13.0550	13.4762	13.8973	14.3184	14.7396	15.1607
133	.1072	.5283	.9495	.3706	.7917	.2129	.6340	.0551	.4763	.8974	.3185	.7397	.1608
136	.1073	.5284	.9495	.3707	.7918	.2129	.6341	.0552	.4764	.8975	.3186	.7398	.1609
139	.1073	.5285	.9496	.3708	.7919	.2130	.6342	.0553	.4764	.8976	.3187	.7399	.1610
142	.1074	.5286	.9497	.3708	.7920	.2131	.6343	.0554	.4765	.8977	.3188	.7400	.1611
421145	10.1075	10.5286	10.9498	11.3709	11.7921	12.2132	12.6344	13.0555	13.4766	13.8978	14.3189	14.7401	15.1612
148	.1076	.5287	.9498	.3710	.7921	.2133	.6344	.0556	.4767	.8979	.3190	.7402	.1613
151	.1076	.5288	.9499	.3711	.7922	.2134	.6345	.0557	.4768	.8980	.3191	.7403	.1614
154	.1077	.5289	.9500	.3712	.7923	.2135	.6346	.0558	.4769	.8981	.3192	.7404	.1615
157	.1078	.5289	.9501	.3712	.7924	.2136	.6347	.0559	.4770	.8982	.3193	.7405	.1617
421160	10.1078	10.5290	10.9502	11.3713	11.7925	12.2136	12.6348	13.0560	13.4771	13.8983	14.3194	14.7406	15.1618
163	.1079	.5291	.9502	.3714	.7926	.2137	.6349	.0561	.4772	.8984	.3195	.7407	.1619
166	.1080	.5292	.9503	.3715	.7926	.2138	.6350	.0561	.4773	.8985	.3196	.7408	.1620
169	.1081	.5292	.9504	.3716	.7927	.2139	.6351	.0562	.4774	.8986	.3197	.7409	.1621
172	.1081	.5293	.9505	.3716	.7928	.2140	.6352	.0563	.4775	.8987	.3198	.7410	.1622
421175	10.1082	10.5294	10.9506	11.3717	11.7929	12.2141	12.6353	13.0564	13.4776	13.8988	14.3200	14.7411	15.1623
178	.1083	.5295	.9506	.3718	.7930	.2142	.6353	.0565	.4777	.8989	.3201	.7412	.1624
181	.1083	.5295	.9507	.3719	.7931	.2142	.6354	.0566	.4778	.8990	.3202	.7413	.1625
184	.1084	.5296	.9508	.3720	.7932	.2143	.6355	.0567	.4779	.8991	.3203	.7414	.1626
187	.1085	.5297	.9509	.3720	.7932	.2144	.6356	.0568	.4780	.8992	.3204	.7415	.1627
421190	10.1086	10.5298	10.9509	11.3721	11.7933	12.2145	12.6357	13.0569	13.4781	13.8993	14.3205	14.7417	15.1628
193	.1086	.5298	.9510	.3722	.7934	.2146	.6358	.0570	.4782	.8994	.3206	.7418	.1629
196	.1087	.5299	.9511	.3723	.7935	.2147	.6359	.0571	.4783	.8995	.3207	.7419	.1631
199	.1088	.5300	.9512	.3724	.7936	.2148	.6360	.0572	.4784	.8996	.3208	.7420	.1632
202	.1088	.5301	.9513	.3725	.7937	.2149	.6361	.0573	.4785	.8997	.3209	.7421	.1633
421205	10.1089	10.5301	10.9513	11.3725	11.7937	12.2149	12.6362	13.0574	13.4786	13.8998	14.3210	14.7422	15.1634
208	.1090	.5302	.9514	.3726	.7938	.2150	.6362	.0574	.4787	.8999	.3211	.7423	.1635
211	.1091	.5303	.9515	.3727	.7939	.2151	.6363	.0575	.4788	.9000	.3212	.7424	.1636
214	.1091	.5304	.9516	.3728	.7940	.2152	.6364	.0576	.4788	.9001	.3213	.7425	.1637
217	.1092	.5304	.9516	.3729	.7941	.2153	.6365	.0577	.4789	.9002	.3214	.7426	.1638
421220	10.1093	10.5305	10.9517	11.3729	11.7942	12.2154	12.6366	13.0578	13.4790	13.9003	14.3215	14.7427	15.1639
223	.1094	.5306	.9518	.3730	.7942	.2155	.6367	.0579	.4791	.9004	.3216	.7428	.1640
226	.1094	.5307	.9519	.3731	.7943	.2156	.6368	.0580	.4792	.9005	.3217	.7429	.1641
229	.1095	.5307	.9520	.3732	.7944	.2156	.6369	.0581	.4793	.9006	.3218	.7430	.1642
232	.1096	.5308	.9520	.3733	.7945	.2157	.6370	.0582	.4794	.9007	.3219	.7431	.1644
421235	10.1096	10.5309	10.9521	11.3733	11.7946	12.2158	12.6371	13.0583	13.4795	13.9008	14.3220	14.7432	15.1645
238	.1097	.5310	.9522	.3734	.7947	.2159	.6371	.0584	.4796	.9009	.3221	.7433	.1646
241	.1098	.5310	.9523	.3735	.7947	.2160	.6372	.0585	.4797	.9010	.3222	.7434	.1647
244	.1099	.5311	.9523	.3736	.7948	.2161	.6373	.0586	.4798	.9011	.3223	.7435	.1648
247	.1099	.5312	.9524	.3737	.7949	.2162	.6374	.0587	.4799	.9012	.3224	.7436	.1649
421250	10.1100	10.5313	10.9525	11.3738	11.7950	12.2163	12.6375	13.0588	13.4800	13.9013	14.3225	14.7438	15.1650
253	.1101	.5313	.9526	.3738	.7951	.2163	.6376	.0588	.4801	.9013	.3226	.7439	.1651
256	.1101	.5314	.9527	.3739	.7952	.2164	.6377	.0589	.4802	.9014	.3227	.7440	.1652
259	.1102	.5315	.9527	.3740	.7953	.2165	.6378	.0590	.4803	.9015	.3228	.7441	.1653
262	.1103	.5316	.9528	.3741	.7953	.2166	.6379	.0591	.4804	.9016	.3229	.7442	.1654
421265	10.1104	10.5316	10.9529	11.3742	11.7954	12.2167	12.6380	13.0592	13.4805	13.9017	14.3230	14.7443	15.1655
268	.1104	.5317	.9530	.3742	.7955	.2168	.6380	.0593	.4806	.9018	.3231	.3444	.1656
271	.1105	.5318	.9530	.3743	.7956	.2169	.6381	.0594	.4807	.9019	.3232	.7445	.1658
274	.1106	.5319	.9531	.3744	.7957	.2169	.6382	.0595	.4808	.9020	.3233	.7446	.1659
277	.1106	.5319	.9532	.3745	.7958	.2170	.6383	.0596	.4809	.9021	.3234	.7447	.1660
421280	10.1107	10.5320	10.9533	11.3746	11.7958	12.2171	12.6384	13.0597	13.4810	13.9022	14.3235	14.7448	15.1661
283	.1108	.5321	.9534	.3746	.7959	.2172	.6385	.0598	.4811	.9023	.3236	.7449	.1662
286	.1109	.5322	.9534	.3747	.7960	.2173	.6386	.0599	.4812	.9024	.3237	.7450	.1663
289	.1109	.5322	.9535	.3748	.7961	.2174	.6387	.0600	.4812	.9025	.3238	.7451	.1664
292	.1110	.5323	.9536	.3749	.7962	.2175	.6388	.0601	.4813	.9026	.3239	.7452	.1665
421295	10.1111	10.5324	10.9537	11.3750	11.7963	12.2176	12.6389	13.0601	13.4814	13.9027	14.3240	14.7453	15.1666
298	.1112	.5325	.9537	.3750	.7963	.2176	.6389	.0602	.4815	.9028	.3241	.7454	.1667
301	.1112	.5325	.9538	.3751	.7964	.2177	.6390	.0603	.4816	.9029	.3242	.7455	.1668
304	.1113	.5326	.9539	.3752	.7965	.2178	.6391	.0604	.4817	.9030	.3243	.7456	.1669
307	.1114	.5327	.9540	.3753	.7966	.2179	.6392	.0605	.4818	.9031	.3244	.7457	.1671
421310	10.1114	10.5328	10.9541	11.3754	11.7967	12.2180	12.6393	13.0606	13.4819	13.9032	14.3245	14.7459	15.1672
313	.1115	.5328	.9541	.3755	.7968	.2181	.6394	.0607	.4820	.9033	.3246	.7460	.1673
316	.1116	.5329	.9542	.3755	.7968	.2182	.6395	.0608	.4921	.9034	.3247	.7461	.1674
319	.1117	.5330	.9543	.3756	.7969	.2183	.6396	.0609	.4822	.9035	.3248	.7462	.1675
322	.1117	.5331	.9544	.3757	.7970	.2183	.6397	.0610	.4823	.9036	.3249	.7463	.1676
421325	10.1118	10.5331	10.9545	11.3758	11.7971	12.2184	12.8398	13.0611	13.4824	13.9037	14.3251	14.7464	15.1677
328	.1119	.5332	.9545	.3759	.7972	.2185	.6398	.0612	.4825	.9038	.3252	.7465	.1678
331	.1119	.5333	.9546	.3759	.7973	.2186	.6399	.0613	.4826	.9039	.3253	.7466	.1679
334	.1120	.5334	.9547	.3760	.7974	.2187	.6400	.0614	.4827	.9040	.3254	.7467	.1680
337	.1121	.5334	.9548	.3761	.7974	.2188	.6401	.0614	.4828	.9041	.3255	.7468	.1681
421340	10.1122	10.5335	10.9548	11.3762	11.7975	12.2189	12.6402	13.0615	13.4829	13.9042	14.3256	14.7469	15.1682
343	.1122	.5336	.9549	.3763	.7976	.2189	.6403	.0616	.4830	.9043	.3257	.7470	.1683
346	.1123	.5337	.9550	.3763	.7977	.2190	.6404	.0617	.4831	.9044	.3258	.7471	.1685
349	.1124	.5337	.9551	.3764	.7978	.2191	.6405	.0618	.4832	.9045	.3259	.7472	.1686
352	.1124	.5338	.9552	.3765	.7979	.2192	.6406	.0619	.4833	.9046	.3260	.7473	.1687
421355	10.1125	10.5339	10.9552	11.3766	11.7979	12.2193	12.6407	13.0620	13.4834	13.9047	14.3261	14.7474	15.1688
358	.1126	.5340	.9553	.3767	.7980	.2194	.6407	.0621	.4835	.9048	.3262	.7475	.1689
361	.1127	.5340	.9554	.3767	.7981	.2195	.6408	.0622	.4836	.9049	.3263	.7476	.1690
364	.1127	.5341	.9555	.3768	.7982	.2196	.6409	.0623	.4836	.9050	.3264	.7477	.1691
367	.1128	.5342	.9555	.3769	.7983	.2196	.6410	.0624	.4837	.9051	.3265	.7478	.1692
421370	10.1129	10.5343	10.9556	11.3770	11.7984	12.2197	12.6411	13.0625	13.4838	13.9052	14.3266	14.7480	15.1693
373	.1130	.5343	.9557	.3771	.7984	.2198	.6412	.0626	.4839	.9053	.3267	.7481	.1694
376	.1130	.5344	.9558	.3772	.7985	.2199	.6413	.0627	.4840	.9054	.3268	.7482	.1695
379	.1131	.5345	.9559	.3772	.7986	.2200	.6414	.0627	.4841	.9055	.3269	.7483	.1696
382	.1132	.5346	.9559	.3773	.7987	.2201	.6415	.0628	.4842	.9056	.3270	.7484	.1698
421385	10.1132	10.5346	10.9560	11.3774	11.7988	12.2202	12.6416	13.0629	13.4843	13.9057	14.3271	14.7485	15.1699
388	.1133	.5347	.9561	.3775	.7989	.2203	.6416	.0630	.4844	.9058	.3272	.7486	.1700
391	.1134	.5348	.9562	.3776	.7989	.2203	.6417	.0631	.4845	.9059	.3273	.7487	.1701
394	.1135	.5349	.9562	.3776	.7990	.2204	.6418	.0632	.4846	.9060	.3274	.7488	.1702
397	.1135	.5349	.0563	.3777	.7991	.2205	.6419	.0633	.4847	.9061	.3275	.7489	.1703
421400	10.1136	10.5350	10.9564	11.3778	11.7992	12.2206	12.6420	13.0634	13.4848	13.9062	14.3276	14.7490	15.1704

MEGACYCLES PER SECOND

HARMONICS

BASIC FREQ.	37	38	39	40	41	42	43	44	45	46	47	48	50
421100	15.5807	16.0018	16.4229	16.8440	17.2651	17.6862	18.1073	18.5284	18.9495	19.3706	19.7917	20.2128	21.0550
103	.5808	.0019	.4230	.8441	.2652	.6863	.1074	.5285	.9496	.3707	.7918	.2129	.0552
106	.5809	.0020	.4231	.8442	.2653	.6865	.1076	.5287	.9498	.3709	.7920	.2131	.0553
109	.5810	.0021	.4233	.8444	.2655	.6866	.1077	.5288	.9499	.3710	.7921	.2132	.0555
112	.5811	.0023	.4234	.8445	.2656	.6867	.1078	.5289	.9500	.3712	.7923	.2134	.0556
421115	15.5813	16.0024	16.4235	16.8446	17.2657	17.6868	18.1079	18.5291	18.9502	19.3713	19.7924	20.2135	21.0558
118	.5814	.0025	.4236	.8447	.2658	.6870	.1081	.5292	.9503	.3714	.7925	.2137	.0559
121	.5815	.0026	.4237	.8448	.2660	.6871	.1082	.5293	.9504	.3716	.7927	.2138	.0561
124	.5816	.0027	.4238	.8450	.2661	.6872	.1083	.5295	.9506	.3717	.7928	.2140	.0562
127	.5817	.0028	.4240	.8451	.2662	.6873	.1085	.5296	.9507	.3718	.7930	.2141	.0564
421130	15.5818	16.0029	16.4241	16.8452	17.2663	17.6875	18.1086	18.5297	18.9509	19.3720	19.7931	20.2142	21.0565
133	.5819	.0031	.4242	.8453	.2665	.6876	.1087	.5299	.9510	.3721	.7933	.2144	.0567
136	.5820	.0032	.4243	.8454	.2666	.6877	.1088	.5300	.9511	.3723	.7934	.2145	.0568
139	.5821	.0033	.4244	.8456	.2667	.6878	.1090	.5301	.9513	.3724	.7935	.2147	.0570
142	.5823	.0034	.4245	.8457	.2668	.6880	.1091	.5302	.9514	.3725	.7937	.2148	.0571
421145	15.5824	16.0035	16.4247	16.8458	17.2669	17.6881	18.1092	18.5304	18.9515	19.3727	19.7938	20.2150	21.0573
148	.5825	.0036	.4248	.8459	.2671	.6882	.1094	.5305	.9517	.3728	.7940	.2151	.0574
151	.5826	.0037	.4249	.8460	.2672	.6883	.1095	.5306	.9518	.3729	.7941	.2152	.0576
154	.5827	.0039	.4250	.8462	.2673	.6885	.1096	.5308	.9519	.3731	.7942	.2154	.0577
157	.5828	.0040	.4251	.8463	.2674	.6886	.1098	.5309	.9521	.3732	.7944	.2155	.0579
421160	15.5829	16.0041	16.4252	16.8464	17.2676	17.6887	18.1099	18.5310	18.9522	19.3734	19.7945	20.2157	21.0580
163	.5830	.0042	.4254	.8465	.2677	.6888	.1100	.5312	.9523	.3735	.7947	.2158	.0582
166	.5831	.0043	.4255	.8466	.2678	.6890	.1101	.5313	.9525	.3736	.7948	.2160	.0583
169	.5833	.0044	.4256	.8468	.2679	.6891	.1103	.5314	.9526	.3738	.7949	.2161	.0585
172	.5834	.0045	.4257	.8469	.2681	.6892	.1104	.5316	.9527	.3739	.7951	.2163	.0586
421175	15.5835	16.0047	16.4258	16.8470	17.2682	17.6894	18.1105	18.5317	18.9529	19.3741	19.7952	20.2164	21.0588
178	.5836	.0048	.4259	.8471	.2683	.6895	.1107	.5318	.9530	.3742	.7954	.2165	.0589
181	.5837	.0049	.4261	.8472	.2684	.6896	.1108	.5320	.9531	.3743	.7955	.2167	.0591
184	.5838	.0050	.4262	.8474	.2685	.6897	.1109	.5321	.9533	.3745	.7956	.2168	.0592
187	.5839	.0051	.4263	.8475	.2687	.6899	.1110	.5322	.9534	.3746	.7958	.2170	.0594
421190	15.5840	16.0052	16.4264	16.8476	17.2688	17.6900	18.1112	18.5324	18.9536	19.3747	19.7959	20.2171	21.0595
193	.5841	.0053	.4265	.8477	.2689	.6901	.1113	.5325	.9537	.3749	.7961	.2173	.0597
196	.5843	.0054	.4266	.8478	.2690	.6902	.1114	.5326	.9538	.3750	.7962	.2174	.0598
199	.5844	.0056	.4268	.8480	.2692	.6904	.1116	.5328	.9540	.3752	.7964	.2176	.0600
202	.5845	.0057	.4269	.8481	.2693	.6905	.1117	.5329	.9541	.3753	.7965	.2177	.0601
421205	15.5846	16.0058	16.4270	16.8482	17.2694	17.6906	18.1118	18.5330	18.9542	19.3754	19.7966	20.2178	21.0603
208	.5847	.0059	.4271	.8483	.2695	.6907	.1119	.5332	.9544	.3756	.7968	.2180	.0604
211	.5848	.0060	.4272	.8484	.2697	.6909	.1121	.5333	.9545	.3757	.7969	.2181	.0606
214	.5849	.0061	.4273	.8486	.2698	.6910	.1122	.5334	.9546	.3758	.7971	.2183	.0607
217	.5850	.0062	.4275	.8487	.2699	.6911	.1123	.5335	.9548	.3760	.7972	.2184	.0609
421220	15.5851	16.0064	16.4276	16.8488	17.2700	17.6912	18.1125	18.5337	18.9549	19.3761	19.7973	20.2186	21.0610
223	.5853	.0065	.4277	.8489	.2701	.6914	.1126	.5338	.9550	.3763	.7975	.2187	.0612
226	.5854	.0066	.4278	.8490	.2703	.6915	.1127	.5339	.9552	.3764	.7976	.2188	.0613
229	.5855	.0067	.4279	.8492	.2704	.6916	.1128	.5341	.9553	.3765	.7978	.2190	.0615
232	.5856	.0068	.4280	.8493	.2705	.6917	.1130	.5342	.9554	.3767	.7979	.2191	.0616
421235	15.5857	16.0069	16.4282	16.8494	17.2706	17.6919	18.1131	18.5343	18.9556	19.3768	19.7980	20.2193	21.0618
238	.5858	.0070	.4283	.8495	.2708	.6920	.1132	.5345	.9557	.3769	.7982	.2194	.0619
241	.5859	.0072	.4284	.8496	.2709	.6921	.1134	.5346	.9558	.3771	.7983	.2196	.0621
244	.5860	.0073	.4285	.8498	.2710	.6922	.1135	.5347	.9560	.3772	.7985	.2197	.0622
247	.5861	.0074	.4286	.8499	.2711	.6924	.1136	.5349	.9561	.3774	.7986	.2199	.0624
421250	15.5863	16.0075	16.4288	16.8500	17.2713	17.6925	18.1138	18.5350	18.9563	19.3775	19.7988	20.2200	21.0625
253	.5864	.0076	.4289	.8501	.2714	.6926	.1139	.5351	.9564	.3776	.7989	.2201	.0627
256	.5865	.0077	.4290	.8502	.2715	.6928	.1140	.5353	.9565	.3778	.7990	.2203	.0628
259	.5866	.0078	.4291	.8504	.2716	.6929	.1141	.5354	.9567	.3779	.7992	.2204	.0630
262	.5867	.0080	.4292	.8505	.2717	.6930	.1143	.5355	.9568	.3781	.7993	.2206	.0631
421265	15.5868	16.0081	16.4293	16.8506	17.2719	17.6931	18.1144	18.5357	18.9569	19.3782	19.7995	20.2207	21.0633
268	.5869	.0082	.4295	.8507	.2720	.6933	.1145	.5358	.9571	.3783	.7996	.2209	.0634
271	.5870	.0083	.4296	.8508	.2721	.6934	.1147	.5359	.9572	.3785	.7997	.2210	.0636
274	.5871	.0084	.4297	.8510	.2722	.6935	.1148	.5361	.9573	.3786	.7999	.2212	.0637
277	.5872	.0085	.4298	.8511	.2724	.6936	.1149	.5362	.9575	.3787	.8000	.2213	.0639
421280	15.5874	16.0086	16.4299	16.8512	17.2725	17.6938	18.1150	18.5363	18.9576	19.3789	19.8002	20.2214	21.0640
283	.5875	.0088	.4300	.8513	.2726	.6939	.1152	.5365	.9577	.3790	.8003	.2216	.0642
286	.5876	.0089	.4302	.8514	.2727	.6940	.1153	.5366	.9579	.3792	.8004	.2217	.0643
289	.5877	.0090	.4303	.8516	.2728	.6941	.1154	.5367	.9580	.3793	.8006	.2219	.0645
292	.5878	.0091	.4304	.8517	.2730	.6943	.1156	.5368	.9581	.3794	.8007	.2220	.0646
421295	15.5879	16.0092	16.4305	16.8518	17.2731	17.6944	18.1157	18.5370	18.9583	19.3796	19.8009	20.2222	21.0648
298	.5880	.0093	.4306	.8519	.2732	.6945	.1158	.5371	.9584	.3797	.8010	.2223	.0649
301	.5881	.0094	.4307	.8520	.2733	.6946	.1159	.5372	.9585	.3798	.8011	.2224	.0651
304	.5882	.0096	.4309	.8522	.2735	.6948	.1161	.5374	.9587	.3800	.8013	.2226	.0652
307	.5884	.0097	.4310	.8523	.2736	.6949	.1162	.5375	.9588	.3801	.8014	.2227	.0654
421310	15.5885	16.0098	16.4311	16.8524	17.2737	17.6950	18.1163	18.5376	18.9590	19.3803	19.8016	20.2229	21.0655
313	.5886	.0099	.4312	.8525	.2738	.6951	.1165	.5378	.9591	.3804	.8017	.2230	.0657
316	.5887	.0100	.4313	.8526	.2740	.6953	.1166	.5379	.9592	.3805	.8019	.2232	.0658
319	.5888	.0101	.4314	.8528	.2741	.6954	.1167	.5380	.9594	.3807	.8020	.2233	.0660
322	.5889	.0102	.4316	.8529	.2742	.6955	.1168	.5382	.9595	.3808	.8021	.2235	.0661
421325	15.5890	16.0104	16.4317	16.8530	17.2743	17.6957	18.1170	18.5383	18.9596	19.3810	19.8023	20.2236	21.0663
328	.5891	.0105	.4318	.8531	.2744	.6958	.1171	.5384	.9598	.3811	.8024	.2237	.0664
331	.5892	.0106	.4319	.8532	.2746	.6959	.1172	.5386	.9599	.3812	.8026	.2239	.0666
334	.5894	.0107	.4320	.8534	.2747	.6960	.1174	.5387	.9600	.3814	.8027	.2240	.0667
337	.5895	.0108	.4321	.8535	.2748	.6962	.1175	.5388	.9602	.3815	.8028	.2242	.0669
421340	15.5896	16.0109	16.4323	16.8536	17.2749	17.6963	18.1176	18.5390	18.9603	19.3816	19.8030	20.2243	21.0670
343	.5897	.0110	.4324	.8537	.2751	.6964	.1177	.5391	.9604	.3818	.8031	.2245	.0672
346	.5898	.0111	.4325	.8538	.2752	.6965	.1179	.5392	.9606	.3819	.8033	.2246	.0673
349	.5899	.0113	.4326	.8540	.2753	.6967	.1180	.5394	.9607	.3821	.8034	.2248	.0675
352	.5900	.0114	.4327	.8541	.2754	.6968	.1181	.5395	.9608	.3822	.8035	.2249	.0676
421355	15.5901	16.0115	16.4328	16.8542	17.2756	17.6969	18.1183	18.5396	18.9610	19.3823	19.8037	20.2250	21.0678
358	.5902	.0116	.4330	.8543	.2757	.6970	.1184	.5398	.9611	.3825	.8038	.2252	.0679
361	.5904	.0117	.4331	.8544	.2758	.6972	.1185	.5399	.9612	.3826	.8040	.2253	.0681
364	.5905	.0118	.4332	.8546	.2759	.6973	.1187	.5400	.9614	.3827	.8041	.2255	.0682
367	.5906	.0119	.4333	.8547	.2760	.6974	.1188	.5401	.9615	.3829	.8042	.2256	.0684
421370	15.5907	16.0121	16.4334	16.8548	17.2762	17.6975	18.1189	18.5403	18.9617	19.3830	19.8044	20.2258	21.0685
373	.5908	.0122	.4335	.8549	.2763	.6977	.1190	.5404	.9618	.3832	.8045	.2259	.0687
376	.5909	.0123	.4337	.8550	.2764	.6978	.1192	.5405	.9619	.3833	.8047	.2260	.0688
379	.5910	.0124	.4338	.8552	.2765	.6979	.1193	.5407	.9621	.3834	.8048	.2262	.0690
382	.5911	.0125	.4339	.8553	.2767	.6980	.1194	.5408	.9622	.3836	.8050	.2263	.0691
421385	15.5912	16.0126	16.4340	16.8554	17.2768	17.6982	18.1196	18.5409	18.9623	19.3837	19.8051	20.2265	21.0693
388	.5914	.0127	.4341	.8555	.2769	.6983	.1197	.5411	.9625	.3838	.8052	.2266	.0694
391	.5915	.0129	.4342	.8556	.2770	.6984	.1198	.5412	.9626	.3840	.8054	.2268	.0696
394	.5916	.0130	.4344	.8558	.2772	.6985	.1199	.5413	.9627	.3841	.8055	.2269	.0697
397	.5917	.0131	.4345	.8559	.2773	.6987	.1201	.5415	.9629	.3843	.8057	.2271	.0699
421400	15.5918	16.0132	16.4346	16.8560	17.2774	17.6988	18.1202	18.5416	18.9630	19.3844	19.8058	20.2272	21.0700

MEGACYCLES PER SECOND

HARMONICS

BASIC FREQ.	24	25	26	27	28	29	30	31	32	33	34	35	36
421400	10.1136	10.5350	10.9564	11.3778	11.7992	12.2206	12.6420	13.0634	13.4848	13.9062	14.3276	14.7490	15.1704
403	.1137	.5351	.9565	.3779	.7993	.2207	.6421	.0635	.4849	.9063	.3277	.7491	.1705
406	.1137	.5352	.9566	.3780	.7994	.2208	.6422	.0636	.4850	.9064	.3278	.7492	.1706
409	.1138	.5352	.9566	.3780	.7995	.2209	.6423	.0637	.4851	.9065	.3279	.7493	.1707
412	.1139	.5353	.9567	.3781	.7995	.2209	.6424	.0638	.4852	.9066	.3280	.7494	.1708
421415	10.1140	10.5354	10.9568	11.3782	11.7996	12.2210	12.6425	13.0639	13.4853	13.9067	14.3281	14.7495	15.1709
418	.1140	.5355	.9569	.3783	.7997	.2211	.6425	.0640	.4854	.9068	.3282	.7496	.1710
421	.1141	.5355	.9569	.3784	.7998	.2212	.6426	.0641	.4855	.9069	.3283	.7497	.1712
424	.1142	.5356	.9570	.3784	.7999	.2213	.6427	.0641	.4856	.9070	.3284	.7498	.1713
427	.1142	.5357	.9571	.3785	.8000	.2214	.6428	.0642	.4857	.9071	.3285	.7499	.1714
421430	10.1143	10.5358	10.9572	11.3786	11.8000	12.2215	12.6429	13.0643	13.4858	13.9072	14.3286	14.7501	15.1715
433	.1144	.5358	.9573	.3787	.8001	.2216	.6430	.0644	.4859	.9073	.3287	.7502	.1716
436	.1145	.5359	.9573	.3788	.8002	.2216	.6431	.0645	.4860	.9074	.3288	.7503	.1717
439	.1145	.5360	.9574	.3789	.8003	.2217	.6432	.0646	.4860	.9075	.3289	.7504	.1718
442	.1146	.5361	.9575	.3789	.8004	.2218	.6433	.0647	.4861	.9076	.3290	.7505	.1719
421445	10.1147	10.5361	10.9576	11.3790	11.8005	12.2219	12.6434	13.0648	13.4862	13.9077	14.3291	14.7506	15.1720
448	.1148	.5362	.9576	.3791	.8005	.2220	.6434	.0649	.4863	.9078	.3292	.7507	.1721
451	.1148	.5363	.9577	.3792	.8006	.2221	.6435	.0650	.4864	.9079	.3293	.7508	.1722
454	.1149	.5364	.9578	.3793	.8007	.2222	.6436	.0651	.4865	.9080	.3294	.7509	.1723
457	.1150	.5364	.9579	.3793	.8008	.2223	.6437	.0652	.4866	.9081	.3295	.7510	.1725
421460	10.1150	10.5365	10.9580	11.3794	11.8009	12.2223	12.6438	13.0653	13.4867	13.9082	14.3296	14.7511	15.1726
463	.1151	.5366	.9580	.3795	.8010	.2224	.6439	.0654	.4868	.9083	.3297	.7512	.1727
466	.1152	.5367	.9581	.3796	.8010	.2225	.6440	.0654	.4869	.9084	.3298	.7513	.1728
469	.1153	.5367	.9582	.3797	.8011	.2226	.6441	.0655	.4870	.9085	.3299	.7514	.1729
472	.1153	.5368	.9583	.3797	.8012	.2227	.6442	.0656	.4871	.9086	.3300	.7515	.1730
421475	10.1154	10.5369	10.9584	11.3798	11.8013	12.2228	12.6443	13.0657	13.4872	13.9087	14.3302	14.7516	15.1731
478	.1155	.5370	.9584	.3799	.8014	.2229	.6443	.0658	.4873	.9088	.3303	.7517	.1732
481	.1155	.5370	.9585	.3800	.8015	.2229	.6444	.0659	.4874	.9089	.3304	.7518	.1733
484	.1156	.5371	.9586	.3801	.8016	.2230	.6445	.0660	.4875	.9090	.3305	.7519	.1734
487	.1157	.5372	.9587	.3801	.8016	.2231	.6446	.0661	.4876	.9091	.3306	.7520	.1735
421490	10.1158	10.5373	10.9587	11.3802	11.8017	12.2232	12.6447	13.0662	13.4877	13.9092	14.3307	14.7522	15.1736
493	.1158	.5373	.9588	.3803	.8018	.2233	.6448	.0663	.4878	.9093	.3308	.7523	.1737
496	.1159	.5374	.9589	.3804	.8019	.2234	.6449	.0664	.4879	.9094	.3309	.7524	.1739
499	.1160	.5375	.9590	.3805	.8020	.2235	.6450	.0665	.4880	.9095	.3310	.7525	.1740
502	.1160	.5376	.9591	.3806	.8021	.2236	.6451	.0666	.4881	.9096	.3311	.7526	.1741
421505	10.1161	10.5376	10.9591	11.3806	11.8021	12.2236	12.6452	13.0667	13.4882	13.9097	14.3312	14.7527	15.1742
508	.1162	.5377	.9592	.3807	.8022	.2237	.6452	.0667	.4883	.9098	.3313	.7528	.1743
511	.1163	.5378	.9593	.3808	.8023	.2238	.6453	.0668	.4884	.9099	.3314	.7529	.1744
514	.1163	.5379	.9594	.3809	.8024	.2239	.6454	.0669	.4884	.9100	.3315	.7530	.1745
517	.1164	.5379	.9594	.3810	.8025	.2240	.6455	.0670	.4885	.9101	.3316	.7531	.1746
421520	10.1165	10.5380	10.9595	11.3810	11.8026	12.2241	12.6456	13.0671	13.4886	13.9102	14.3317	14.7532	15.1747
523	.1166	.5381	.9596	.3811	.8026	.2242	.6457	.0672	.4887	.9103	.3318	.7533	.1748
526	.1166	.5382	.9597	.3812	.8027	.2243	.6458	.0673	.4888	.9104	.3319	.7534	.1749
529	.1167	.5382	.9598	.3813	.8028	.2243	.6459	.0674	.4889	.9105	.3320	.7535	.1750
532	.1168	.5383	.9598	.3814	.8029	.2244	.6460	.0675	.4890	.9106	.3321	.7536	.1752
421535	10.1168	10.5384	10.9599	11.3814	11.8030	12.2245	12.6461	13.0676	13.4891	13.9107	14.3322	14.7537	15.1753
538	.1169	.5385	.9600	.3815	.8031	.2246	.6461	.0677	.4892	.9108	.3323	.7538	.1754
541	.1170	.5385	.9601	.3816	.8031	.2247	.6462	.0678	.4893	.9109	.3324	.7539	.1755
544	.1171	.5386	.9601	.3817	.8032	.2248	.6463	.0679	.4894	.9110	.3325	.7540	.1756
547	.1171	.5387	.9602	.3818	.8033	.2249	.6464	.0680	.4895	.9111	.3326	.7541	.1757
421550	10.1172	10.5388	10.9603	11.3819	11.8034	12.2250	12.6465	13.0681	13.4896	13.9112	14.3327	14.7543	15.1758
553	.1173	.5388	.9604	.3819	.8035	.2250	.6466	.0681	.4897	.9112	.3328	.7544	.1759
556	.1173	.5389	.9605	.3820	.8036	.2251	.6467	.0682	.4898	.9113	.3329	.7545	.1760
559	.1174	.5390	.9605	.3821	.8037	.2252	.6468	.0683	.4899	.9114	.3330	.7546	.1761
562	.1175	.5391	.9606	.3822	.8037	.2253	.6469	.0684	.4900	.9115	.3331	.7547	.1762
421565	10.1176	10.5391	10.9607	11.3823	11.8038	12.2254	12.6470	13.0685	13.4901	13.9116	14.3332	14.7548	15.1763
568	.1176	.5392	.9608	.3823	.8039	.2255	.6470	.0686	.4902	.9117	.3333	.7549	.1764
571	.1177	.5393	.9608	.3824	.8040	.2256	.6471	.0687	.4903	.9118	.3334	.7550	.1766
574	.1178	.5394	.9609	.3825	.8041	.2256	.6472	.0688	.4904	.9119	.3335	.7551	.1767
577	.1178	.5394	.9610	.3826	.8042	.2257	.6473	.0689	.4905	.9120	.3336	.7552	.1768
421580	10.1179	10.5395	10.9611	11.3827	11.8042	12.2258	12.6474	13.0690	13.4906	13.9121	14.3337	14.7553	15.1769
583	.1180	.5396	.9612	.3827	.8043	.2259	.6475	.0691	.4907	.9122	.3338	.7554	.1770
586	.1181	.5397	.9612	.3828	.8044	.2260	.6476	.0692	.4908	.9123	.3339	.7555	.1771
589	.1181	.5397	.9613	.3829	.8045	.2261	.6477	.0693	.4908	.9124	.3340	.7556	.1772
592	.1182	.5398	.9614	.3830	.8046	.2262	.6478	.0694	.4909	.9125	.3341	.7557	.1773
421595	10.1183	10.5399	10.9615	11.3831	11.8047	12.2263	12.6479	13.0694	13.4910	13.9126	14.3342	14.7558	15.1774
598	.1184	.5400	.9615	.3831	.8047	.2263	.6479	.0695	.4911	.9127	.3343	.7559	.1775
601	.1184	.5400	.9616	.3832	.8048	.2264	.6480	.0696	.4912	.9128	.3344	.7560	.1776
604	.1185	.5401	.9617	.3833	.8049	.2265	.6481	.0697	.4913	.9129	.3345	.7561	.1777
607	.1186	.5402	.9618	.3834	.8050	.2266	.6482	.0698	.4914	.9130	.3346	.7562	.1779
421610	10.1186	10.5403	10.9619	11.3835	11.8051	12.2267	12.6483	13.0699	13.4915	13.9131	14.3347	14.7564	15.1780
613	.1187	.5403	.9619	.3836	.8052	.2268	.6484	.0700	.4916	.9132	.3348	.7565	.1781
616	.1188	.5404	.9620	.3836	.8052	.2269	.6485	.0701	.4917	.9133	.3349	.7566	.1782
619	.1189	.5405	.9621	.3837	.8053	.2270	.6486	.0702	.4918	.9134	.3350	.7567	.1783
622	.1189	.5406	.9622	.3838	.8054	.2270	.6487	.0703	.4919	.9135	.3351	.7568	.1784
421625	10.1190	10.5406	10.9623	11.3839	11.8055	12.2271	12.6488	13.0704	13.4920	13.9136	14.3353	14.7569	15.1785
628	.1191	.5407	.9623	.3840	.8056	.2272	.6488	.0705	.4921	.9137	.3354	.7570	.1786
631	.1191	.5408	.9624	.3840	.8057	.2273	.6489	.0706	.4922	.9138	.3355	.7571	.1787
634	.1192	.5409	.9625	.3841	.8058	.2274	.6490	.0707	.4923	.9139	.3356	.7572	.1788
637	.1193	.5409	.9626	.3842	.8058	.2275	.6491	.0707	.4924	.9140	.3357	.7573	.1789
421640	10.1194	10.5410	10.9626	11.3843	11.8059	12.2276	12.6492	13.0708	13.4925	13.9141	14.3358	14.7574	15.1790
643	.1194	.5411	.9627	.3844	.8060	.2276	.6493	.0709	.4926	.9142	.3359	.7575	.1791
646	.1195	.5412	.9628	.3844	.8061	.2277	.6494	.0710	.4927	.9143	.3360	.7576	.1793
649	.1196	.5412	.9629	.3845	.8062	.2278	.6495	.0711	.4928	.9144	.3361	.7577	.1794
652	.1196	.5413	.9630	.3846	.8063	.2279	.6496	.0712	.4929	.9145	.3362	.7578	.1795
421655	10.1197	10.5414	10.9630	11.3847	11.8063	12.2280	12.6497	13.0713	13.4930	13.9146	14.3363	14.7579	15.1796
658	.1198	.5415	.9631	.3848	.8064	.2281	.6497	.0714	.4931	.9147	.3364	.7580	.1797
661	.1199	.5415	.9632	.3848	.8065	.2282	.6498	.0715	.4932	.9148	.3365	.7581	.1798
664	.1199	.5416	.9633	.3849	.8066	.2283	.6499	.0716	.4932	.9149	.3366	.7582	.1799
667	.1200	.5417	.9633	.3850	.8067	.2283	.6500	.0717	.4933	.9150	.3367	.7583	.1800
421670	10.1201	10.5418	10.9634	11.3851	11.8068	12.2284	12.6501	13.0718	13.4934	13.9151	14.3368	14.7585	15.1801
673	.1202	.5418	.9635	.3852	.8068	.2285	.6502	.0719	.4935	.9152	.3369	.7586	.1802
676	.1202	.5419	.9636	.3853	.8069	.2286	.6503	.0720	.4936	.9153	.3370	.7587	.1803
679	.1203	.5420	.9637	.3853	.8070	.2287	.6504	.0720	.4937	.9154	.3371	.7588	.1804
682	.1204	.5421	.9637	.3854	.8071	.2288	.6505	.0721	.4938	.9155	.3372	.7589	.1806
421685	10.1204	10.5421	10.9638	11.3855	11.8072	12.2289	12.6506	13.0722	13.4939	13.9156	14.3373	14.7590	15.1807
688	.1205	.5422	.9639	.3856	.8073	.2290	.6506	.0723	.4940	.9157	.3374	.7591	.1808
691	.1206	.5423	.9640	.3857	.8073	.2290	.6507	.0724	.4941	.9158	.3375	.7592	.1809
694	.1207	.5424	.9640	.3857	.8074	.2291	.6508	.0725	.4942	.9159	.3376	.7593	.1810
697	.1207	.5424	.9641	.3858	.8075	.2292	.6509	.0726	.4943	.9160	.3377	.7594	.1811
421700	10.1208	10.5425	10.9642	11.3859	11.8076	12.2293	12.6510	13.0727	13.4944	13.9161	14.3378	14.7595	15.1812

MEGACYCLES PER SECOND

HARMONICS

BASIC FREQ.	37	38	39	40	41	42	43	44	45	46	47	48	50
421400	15.5918	16.0132	16.4346	16.8560	17.2774	17.6988	18.1202	18.5416	18.9630	19.3844	19.8058	20.2272	21.0700
403	.5919	.0133	.4347	.8561	.2775	.6989	.1203	.5417	.9631	.3845	.8059	.2273	.0702
406	.5920	.0134	.4348	.8562	.2776	.6991	.1205	.5419	.9633	.3847	.8061	.2275	.0703
409	.5921	.0135	.4350	.8564	.2778	.6992	.1206	.5420	.9634	.3848	.8062	.2276	.0705
412	.5922	.0137	.4351	.8565	.2779	.6993	.1207	.5421	.9635	.3850	.8064	.2278	.0706
421415	15.5924	16.0138	16.4352	16.8566	17.2780	17.6994	18.1208	18.5423	18.9637	19.3851	19.8065	20.2279	21.0708
418	.5925	.0139	.4353	.8567	.2781	.6996	.1210	.5424	.9638	.3852	.8066	.2281	.0709
421	.5926	.0140	.4354	.8568	.2783	.6997	.1211	.5425	.9639	.3854	.8068	.2282	.0711
424	.5927	.0141	.4355	.8570	.2784	.6998	.1212	.5427	.9641	.3855	.8069	.2284	.0712
427	.5928	.0142	.4357	.8571	.2785	.6999	.1214	.5428	.9642	.3856	.8071	.2285	.0714
421430	15.5929	16.0143	16.4358	16.8572	17.2786	17.7001	18.1215	18.5429	18.9644	19.3858	19.8072	20.2286	21.0715
433	.5930	.0145	.4359	.8573	.2788	.7002	.1216	.5431	.9645	.3859	.8074	.2288	.0717
436	.5931	.0146	.4360	.8574	.2789	.7003	.1217	.5432	.9646	.3861	.8075	.2289	.0718
439	.5932	.0147	.4361	.8576	.2790	.7004	.1219	.5433	.9648	.3862	.8076	.2291	.0720
442	.5934	.0148	.4362	.8577	.2791	.7006	.1220	.5434	.9649	.3863	.8078	.2292	.0721
421445	15.5935	16.0149	16.4364	16.8578	17.2792	17.7007	18.1221	18.5436	18.9650	19.3865	19.8079	20.2294	21.0723
448	.5936	.0150	.4365	.8579	.2794	.7008	.1223	.5437	.9652	.3866	.8081	.2295	.0724
451	.5937	.0151	.4366	.8580	.2795	.7009	.1224	.5438	.9653	.3867	.8082	.2296	.0726
454	.5938	.0153	.4367	.8582	.2796	.7011	.1225	.5440	.9654	.3869	.8083	.2298	.0727
457	.5939	.0154	.4368	.8583	.2797	.7012	.1227	.5441	.9656	.3870	.8085	.2299	.0729
421460	15.5940	16.0155	16.4369	16.8584	17.2799	17.7013	18.1228	18.5442	18.9657	19.3872	19.8086	20.2301	21.0730
463	.5941	.0156	.4371	.8585	.2800	.7014	.1229	.5444	.9658	.3873	.8088	.2302	.0732
466	.5942	.0157	.4372	.8586	.2801	.7016	.1230	.5445	.9660	.3874	.8089	.2304	.0733
469	.5944	.0158	.4373	.8588	.2802	.7017	.1232	.5446	.9661	.3876	.8090	.2305	.0735
472	.5945	.0159	.4374	.8589	.2804	.7018	.1233	.5448	.9662	.3877	.8092	.2307	.0736
421475	15.5946	16.0161	16.4375	16.8590	17.2805	17.7020	18.1234	18.5449	18.9664	19.3879	19.8093	20.2308	21.0738
478	.5947	.0162	.4376	.8591	.2806	.7021	.1236	.5450	.9665	.3880	.8095	.2309	.0739
481	.5948	.0163	.4378	.8592	.2807	.7022	.1237	.5452	.9666	.3881	.8096	.2311	.0741
484	.5949	.0164	.4379	.8594	.2808	.7023	.1238	.5453	.9668	.3883	.8097	.2312	.0742
487	.5950	.0165	.4380	.8595	.2810	.7025	.1239	.5454	.9669	.3884	.8099	.2314	.0744
421490	15.5951	16.0166	16.4381	16.8596	17.2811	17.7026	18.1241	18.5456	18.9671	19.3885	19.8100	20.2315	21.0745
493	.5952	.0167	.4382	.8597	.2812	.7027	.1242	.5457	.9672	.3887	.8102	.2317	.0747
496	.5954	.0168	.4383	.8598	.2813	.7028	.1243	.5458	.9673	.3888	.8103	.2318	.0748
499	.5955	.0170	.4385	.8600	.2815	.7030	.1245	.5460	.9675	.3890	.8105	.2320	.0750
502	.5956	.0171	.4386	.8601	.2816	.7031	.1246	.5461	.9676	.3891	.8106	.2321	.0751
421505	15.5957	16.0172	16.4387	16.8602	17.2817	17.7032	18.1247	18.5462	18.9677	19.3892	19.8107	20.2322	21.0753
508	.5958	.0173	.4388	.8603	.2818	.7033	.1248	.5464	.9679	.3894	.8109	.2324	.0754
511	.5959	.0174	.4389	.8604	.2820	.7035	.1250	.5465	.9680	.3895	.8110	.2325	.0756
514	.5960	.0175	.4390	.8606	.2821	.7036	.1251	.5466	.9681	.3896	.8112	.2327	.0757
517	.5961	.0176	.4392	.8607	.2822	.7037	.1252	.5467	.9683	.3898	.8113	.2328	.0759
421520	15.5962	16.0178	16.4393	16.8608	17.2823	17.7038	18.1254	18.5469	18.9684	19.3899	19.8114	20.2330	21.0760
523	.5964	.0179	.4394	.8609	.2824	.7040	.1255	.5470	.9685	.3901	.8116	.2331	.0762
526	.5965	.0180	.4395	.8610	.2826	.7041	.1256	.5471	.9687	.3902	.8117	.2332	.0763
529	.5966	.0181	.4396	.8612	.2827	.7042	.1257	.5473	.9688	.3903	.8119	.2334	.0765
532	.5967	.0182	.4397	.8613	.2828	.7043	.1259	.5474	.9689	.3905	.8120	.2335	.0766
421535	15.5968	16.0183	16.4399	16.8614	17.2829	17.7045	18.1260	18.5475	18.9691	19.3906	19.8121	20.2337	21.0768
538	.5969	.0184	.4400	.8615	.2831	.7046	.1261	.5477	.9692	.3907	.8123	.2338	.0769
541	.5970	.0186	.4401	.8616	.2832	.7047	.1263	.5478	.9693	.3909	.8124	.2340	.0771
544	.5971	.0187	.4402	.8618	.2833	.7048	.1264	.5479	.9695	.3910	.8126	.2341	.0772
547	.5972	.0188	.4403	.8619	.2834	.7050	.1265	.5481	.9696	.3912	.8127	.2343	.0774
421550	15.5974	16.0189	16.4405	16.8620	17.2836	17.7051	18.1267	18.5482	18.9698	19.3913	19.8129	20.2344	21.0775
553	.5975	.0190	.4406	.8621	.2837	.7052	.1268	.5483	.9699	.3914	.8130	.2345	.0777
556	.5976	.0191	.4407	.8622	.2838	.7054	.1269	.5485	.9700	.3916	.8131	.2347	.0778
559	.5977	.0192	.4408	.8624	.2839	.7055	.1270	.5486	.9702	.3917	.8133	.2348	.0780
562	.5978	.0194	.4409	.8625	.2840	.7056	.1272	.5487	.9703	.3919	.8134	.2350	.0781
421565	15.5979	16.0195	16.4410	16.8626	17.2842	17.7057	18.1273	18.5489	18.9704	19.3920	19.8136	20.2351	21.0783
568	.5980	.0196	.4412	.8627	.2843	.7059	.1274	.5490	.9706	.3921	.8137	.2353	.0784
571	.5981	.0197	.4413	.8628	.2844	.7060	.1276	.5491	.9707	.3923	.8138	.2354	.0786
574	.5982	.0198	.4414	.8630	.2845	.7061	.1277	.5493	.9708	.3924	.8140	.2356	.0787
577	.5983	.0199	.4415	.8631	.2847	.7062	.1278	.5494	.9710	.3925	.8141	.2357	.0789
421580	15.5985	16.0200	16.4416	16.8632	17.2848	17.7064	18.1279	18.5495	18.9711	19.3927	19.8143	20.2358	21.0790
583	.5986	.0202	.4417	.8633	.2849	.7065	.1281	.5497	.9712	.3928	.8144	.2360	.0792
586	.5987	.0203	.4419	.8634	.2850	.7066	.1282	.5498	.9714	.3930	.8145	.2361	.0793
589	.5988	.0204	.4420	.8636	.2851	.7067	.1283	.5499	.9715	.3931	.8147	.2363	.0795
592	.5989	.0205	.4421	.8637	.2853	.7069	.1285	.5500	.9716	.3932	.8148	.2364	.0796
421595	15.5990	16.0206	16.4422	16.8638	17.2854	17.7070	18.1286	18.5502	18.9718	19.3934	19.8150	20.2366	21.0798
598	.5991	.0207	.4423	.8639	.2855	.7071	.1287	.5503	.9719	.3935	.8151	.2367	.0799
601	.5992	.0208	.4424	.8640	.2856	.7072	.1288	.5504	.9720	.3936	.8152	.2368	.0801
604	.5993	.0210	.4426	.8642	.2858	.7074	.1290	.5506	.9722	.3938	.8154	.2370	.0802
607	.5995	.0211	.4427	.8643	.2859	.7075	.1291	.5507	.9723	.3939	.8155	.2371	.0804
421610	15.5996	16.0212	16.4428	16.8644	17.2860	17.7076	18.1292	18.5508	18.9725	19.3941	19.8157	20.2373	21.0805
613	.5997	.0213	.4429	.8645	.2861	.7077	.1294	.5510	.9726	.3942	.8158	.2374	.0807
616	.5998	.0214	.4430	.8646	.2863	.7079	.1295	.5511	.9727	.3943	.8160	.2376	.0808
619	.5999	.0215	.4431	.8648	.2864	.7080	.1296	.5512	.9729	.3945	.8161	.2377	.0810
622	.6000	.0216	.4433	.8649	.2865	.7081	.1297	.5514	.9730	.3946	.8162	.2379	.0811
421625	15.6001	16.0218	16.4434	16.8650	17.2866	17.7083	18.1299	18.5515	18.9731	19.3948	19.8164	20.2380	21.0813
628	.6002	.0219	.4435	.8651	.2867	.7084	.1300	.5516	.9733	.3949	.8165	.2381	.0814
631	.6003	.0220	.4436	.8652	.2869	.7085	.1301	.5518	.9734	.3950	.8167	.2383	.0816
634	.6005	.0221	.4437	.8654	.2870	.7086	.1303	.5519	.9735	.3952	.8168	.2384	.0817
637	.6006	.0222	.4438	.8655	.2871	.7088	.1304	.5520	.9737	.3953	.8169	.2386	.0819
421640	15.6007	16.0223	16.4440	16.8656	17.2872	17.7089	18.1305	18.5522	18.9738	19.3954	19.8171	20.2387	21.0820
643	.6008	.0224	.4441	.8657	.2874	.7090	.1306	.5523	.9739	.3956	.8172	.2389	.0822
646	.6009	.0225	.4442	.8658	.2875	.7091	.1308	.5524	.9741	.3957	.8174	.2390	.0823
649	.6010	.0227	.4443	.8660	.2876	.7093	.1309	.5526	.9742	.3959	.8175	.2392	.0825
652	.6011	.0228	.4444	.8661	.2877	.7094	.1310	.5527	.9743	.3960	.8176	.2393	.0826
421655	15.6012	16.0229	16.4445	16.8662	17.2879	17.7095	18.1312	18.5528	18.9745	19.3961	19.8178	20.2394	21.0828
658	.6013	.0230	.4447	.8663	.2880	.7096	.1313	.5530	.9746	.3963	.8179	.2396	.0829
661	.6015	.0231	.4448	.8664	.2881	.7098	.1314	.5531	.9747	.3964	.8181	.2397	.0831
664	.6016	.0232	.4449	.8666	.2882	.7099	.1316	.5532	.9749	.3965	.8182	.2399	.0832
667	.6017	.0233	.4450	.8667	.2883	.7100	.1317	.5533	.9750	.3967	.8183	.2400	.0834
421670	15.6018	16.0235	16.4451	16.8668	17.2885	17.7101	18.1318	18.5535	18.9752	19.3968	19.8185	20.2402	21.0835
673	.6019	.0236	.4452	.8669	.2886	.7103	.1319	.5536	.9753	.3970	.8186	.2403	.0837
676	.6020	.0237	.4454	.8670	.2887	.7104	.1321	.5537	.9754	.3971	.8188	.2404	.0838
679	.6021	.0238	.4455	.8672	.2888	.7105	.1322	.5539	.9756	.3972	.8189	.2406	.0840
682	.6022	.0239	.4456	.8673	.2890	.7106	.1323	.5540	.9757	.3974	.8191	.2407	.0841
421685	15.6023	16.0240	16.4457	16.8674	17.2891	17.7108	18.1325	18.5541	18.9758	19.3975	19.8192	29.2409	21.0843
688	.6025	.0241	.4458	.8675	.2892	.7109	.1326	.5543	.9760	.3976	.8193	.2410	.0844
691	.6026	.0243	.4459	.8676	.2893	.7110	.1327	.5544	.9761	.3978	.8195	.2412	.0846
694	.6027	.0244	.4461	.8678	.2895	.7111	.1328	.5545	.9762	.3979	.8196	.2413	.0847
697	.6028	.0245	.4462	.8679	.2896	.7113	.1330	.5547	.9764	.3981	.8198	.2415	.0849
421700	15.6029	16.0246	16.4463	16.8680	17.2897	17.7114	18.1331	18.5548	18.9765	19.3982	19.8199	20.2416	21.0850

HARMONICS

BASIC FREQ.	24	25	26	27	28	29	30	31	32	33	34	35	36
421700	10.1208	10.5425	10.9642	11.3859	11.8076	12.2293	12.6510	13.0727	13.4944	13.9161	14.3378	14.7595	15.1812
703	.1209	.5426	.9643	.3860	.8077	.2294	.6511	.0728	.4945	.9162	.3379	.7596	.1813
706	.1209	.5427	.9644	.3861	.8078	.2295	.6512	.0729	.4946	.9163	.3380	.7597	.1814
709	.1210	.5427	.9644	.3861	.8079	.2296	.6513	.0730	.4947	.9164	.3381	.7598	.1815
712	.1211	.5428	.9645	.3862	.8079	.2296	.6514	.0731	.4948	.9165	.3382	.7599	.1816
421715	10.1212	10.5429	10.9646	11.3863	11.8080	12.2297	12.6515	13.0732	13.4949	13.9166	14.3383	14.7600	15.1817
718	.1212	.5430	.9647	.3864	.8081	.2298	.6515	.0733	.4950	.9167	.3384	.7601	.1818
721	.1213	.5430	.9647	.3865	.8082	.2299	.6516	.0734	.4951	.9168	.3385	.7602	.1820
724	.1214	.5431	.9648	.3865	.8083	.2300	.6517	.0734	.4952	.9169	.3386	.7603	.1821
727	.1214	.5432	.9649	.3866	.8084	.2301	.6518	.0735	.4953	.9170	.3387	.7604	.1822
421730	10.1215	10.5433	10.9650	11.3867	11.8084	12.2302	12.6519	13.0736	13.4954	13.9171	14.3388	14.7606	15.1823
733	.1216	.5433	.9651	.3868	.8085	.2303	.6520	.0737	.4955	.9172	.3389	.7607	.1824
736	.1217	.5434	.9651	.3869	.8086	.2303	.6521	.0738	.4956	.9173	.3390	.7608	.1825
739	.1217	.5435	.9652	.3870	.8087	.2304	.6522	.0739	.4956	.9174	.3391	.7609	.1826
742	.1218	.5436	.9653	.3870	.8088	.2305	.6523	.0740	.4957	.9175	.3392	.7610	.1827
421745	10.1219	10.5436	10.9654	11.3871	11.8089	12.2306	12.6524	13.0741	13.4958	13.9176	14.3393	14.7611	15.1828
748	.1220	.5437	.9654	.3872	.8089	.2307	.6524	.0742	.4959	.9177	.3394	.7612	.1829
751	.1220	.5438	.9655	.3873	.8090	.2308	.6525	.0743	.4960	.9178	.3395	.7613	.1830
754	.1221	.5439	.9656	.3874	.8091	.2309	.6526	.0744	.4961	.9179	.3396	.7614	.1831
757	.1222	.5439	.9657	.3874	.8092	.2310	.6527	.0745	.4962	.9180	.3397	.7615	.1833
421760	10.1222	10.5440	10.9658	11.3875	11.8093	12.2310	12.6528	13.0746	13.4963	13.9181	14.3398	14.7616	15.1834
763	.1223	.5441	.9658	.3876	.8094	.2311	.6529	.0747	.4964	.9182	.3399	.7617	.1835
766	.1224	.5442	.9659	.3877	.8094	.2312	.6530	.0747	.4965	.9183	.3400	.7618	.1836
769	.1225	.5442	.9660	.3878	.8095	.2313	.6531	.0748	.4966	.9184	.3401	.7619	.1837
772	.1225	.5443	.9661	.3878	.8096	.2314	.6532	.0749	.4967	.9185	.3402	.7620	.1838
421775	10.1226	10.5444	10.9662	11.3879	11.8097	12.2315	12.6533	13.0750	13.4968	13.9186	14.3404	14.7621	15.1839
778	.1227	.5445	.9662	.3880	.8098	.2316	.6533	.0751	.4969	.9187	.3405	.7622	.1840
781	.1227	.5445	.9663	.3881	.8099	.2316	.6534	.0752	.4970	.9188	.3406	.7623	.1841
784	.1228	.5446	.9664	.3882	.8100	.2317	.6535	.0753	.4971	.9189	.3407	.7624	.1842
787	.1229	.5447	.9665	.3882	.8100	.2318	.6536	.0754	.4972	.9190	.3408	.7625	.1843
421790	10.1230	10.5448	10.9665	11.3883	11.8101	12.2319	12.6537	13.0755	13.4973	13.9191	14.3409	14.7627	15.1844
793	.1230	.5448	.9666	.3884	.8102	.2320	.6538	.0756	.4974	.9192	.3410	.7628	.1845
796	.1231	.5449	.9667	.3885	.8103	.2321	.6539	.0757	.4975	.9193	.3411	.7629	.1847
799	.1232	.5450	.9668	.3886	.8104	.2322	.6540	.0758	.4976	.9194	.3412	.7630	.1848
802	.1232	.5451	.9669	.3887	.8105	.2323	.6541	.0759	.4977	.9195	.3413	.7631	.1849
421805	10.1233	10.5451	10.9669	11.3887	11.8105	12.2323	12.6542	13.0760	13.4978	13.9196	14.3414	14.7632	15.1850
808	.1234	.5452	.9670	.3888	.8106	.2324	.6542	.0760	.4979	.9197	.3415	.7633	.1851
811	.1235	.5453	.9671	.3889	.8107	.2325	.6543	.0761	.4980	.9198	.3416	.7634	.1852
814	.1235	.5454	.9672	.3890	.8108	.2326	.6544	.0762	.4980	.9199	.3417	.7635	.1853
817	.1236	.5454	.9672	.3891	.8109	.2327	.6545	.0763	.4981	.9200	.3418	.7636	.1854
421820	10.1237	10.5455	10.9673	11.3891	11.8110	12.2328	12.6546	13.0764	13.4982	13.9201	14.3419	14.7637	15.1855
823	.1238	.5456	.9674	.3892	.8110	.2329	.6547	.0765	.4983	.9202	.3420	.7638	.1856
826	.1238	.5457	.9675	.3893	.8111	.2330	.6548	.0766	.4984	.9203	.3421	.7639	.1857
829	.1239	.5457	.9676	.3894	.8112	.2330	.6549	.0767	.4985	.9204	.3422	.7640	.1858
832	.1240	.5458	.9676	.3895	.8113	.2331	.6550	.0768	.4986	.9205	.3423	.7641	.1860
421835	10.1240	10.5459	10.9677	11.3895	11.8114	12.2332	12.6551	13.0769	13.4987	13.9206	14.3424	14.7642	15.1861
838	.1241	.5460	.9678	.3896	.8115	.2333	.6551	.0770	.4988	.9207	.3425	.7643	.1862
841	.1242	.5460	.9679	.3897	.8115	.2334	.6552	.0771	.4989	.9208	.3426	.7644	.1863
844	.1243	.5461	.9679	.3898	.8116	.2335	.6553	.0772	.4990	.9209	.3427	.7645	.1864
847	.1243	.5462	.9680	.3899	.8117	.2336	.6554	.0773	.4991	.9210	.3428	.7646	.1865
421850	10.1244	10.5463	10.9681	11.3900	11.8118	12.2337	12.6555	13.0774	13.4992	13.9211	14.3429	14.7648	15.1866
853	.1245	.5463	.9682	.3900	.8119	.2337	.6556	.0774	.4993	.9211	.3430	.7649	.1867
856	.1245	.5464	.9683	.3901	.8120	.2338	.6557	.0775	.4994	.9212	.3431	.7650	.1868
859	.1246	.5465	.9683	.3902	.8121	.2339	.6558	.0776	.4995	.9213	.3432	.7651	.1869
862	.1247	.5466	.9684	.3903	.8121	.2340	.6559	.0777	.4996	.9214	.3433	.7652	.1870
421865	10.1248	10.5466	10.9685	11.3904	11.8122	12.2341	12.6560	13.0778	13.4997	13.9215	14.3434	14.7653	15.1871
868	.1248	.5467	.9686	.3904	.8123	.2342	.6560	.0779	.4998	.9216	.3435	.7654	.1872
871	.1249	.5468	.9686	.3905	.8124	.2343	.6561	.0780	.4999	.9217	.3436	.7655	.1874
874	.1250	.5469	.9687	.3906	.8125	.2343	.6562	.0781	.5000	.9218	.3437	.7656	.1875
877	.1250	.5469	.9688	.3907	.8126	.2344	.6563	.0782	.5001	.9219	.3438	.7657	.1876
421880	10.1251	10.5470	10.9689	11.3908	118126	12.2345	12.6564	13.0783	13.5002	13.9220	14.3439	14.7658	15.1877
883	.1252	.5471	.9690	.3908	.8127	.2346	.6565	.0784	.5003	.9221	.3440	.7659	.1878
886	.1253	.5472	.9690	.3909	.8128	.2347	.6566	.0785	.5004	.9222	.3441	.7660	.1879
889	.1253	.5472	.9691	.3910	.8129	.2348	.6567	.0786	.5004	.9223	.3442	.7661	.1880
892	.1254	.5473	.9692	.3911	.8130	.2349	.6568	.0787	.5005	.9224	.3443	.7662	.1881
421895	10.1255	10.5474	10.9693	11.3912	11.8131	12.2350	12.6569	13.0787	13.5006	13.9225	14.3444	14.7663	15.1882
898	.1256	.5475	.9693	.3912	.8131	.2350	.6569	.0788	.5007	.9226	.3445	.7664	.1883
901	.1256	.5475	.9694	.3913	.8132	.2351	.6570	.0789	.5008	.9227	.3446	.7665	.1884
904	.1257	.5476	.9695	.3914	.8133	.2352	.6571	.0790	.5009	.8228	.3447	.7666	.1885
907	.1258	.5477	.9696	.3915	.8134	.2353	.6572	.0791	.5010	.9229	.3448	.7667	.1887
421910	10.1258	10.5478	10.9697	11.3916	11.8135	12.2354	12.6573	13.0792	13.5011	13.9230	14.3449	14.7669	15.1888
913	.1259	.5478	.9697	.3917	.8136	.2355	.6574	.0793	.5012	.9231	.3450	.7670	.1889
916	.1260	.5479	.9698	.3917	.8136	.2356	.6575	.0794	.5013	.9232	.3451	.7671	.1890
919	.1261	.5480	.9699	.3918	.8137	.2357	.6576	.0795	.5014	.9233	.3452	.7672	.1891
922	.1261	.5481	.9700	.3919	.8138	.2357	.6577	.0796	.5015	.9234	.3453	.7673	.1892
421925	10.1262	10.5481	10.9701	11.3920	11.8139	12.2358	12.6578	13.0797	13.5016	13.9235	14.3455	14.7674	15.1893
928	.1263	.5482	.9701	.3921	.8140	.2359	.6578	.0798	.5017	.3296	.3456	.7675	.1894
931	.1263	.5483	.9702	.3921	.8141	.2360	.6579	.0799	.5018	.9237	.3457	.7676	.1895
934	.1264	.5484	.9703	.3922	.8142	.2361	.6580	.0800	.5019	.9238	.3458	.7677	.1896
937	.1265	.5484	.9704	.3923	.8142	.2362	.6581	.0800	.5020	.9239	.3459	.7678	.1897
421940	10.1266	10.5485	10.9704	11.3924	11.8143	12.2363	12.6582	13.0801	13.5021	13.9240	14.3460	14.7679	15.1898
943	.1266	.5486	.9705	.3925	.8144	.2363	.6583	.0802	.5022	.9241	.3461	.7680	.1899
946	.1267	.5487	.9706	.3925	.8145	.2364	.6584	.0803	.5023	.9242	.3462	.7681	.1901
949	.1268	.5487	.9707	.3926	.8146	.2365	.6585	.0804	.5024	.9243	.3463	.7682	.1902
952	.1268	.5488	.9708	.3927	.8147	.2366	.6586	.0805	.5025	.9244	.3464	.7683	.1903
421955	10.1269	10.5489	10.9708	11.3928	11.8147	12.2367	12.6587	13.0806	13.5026	13.9245	14.3465	13.7684	15.1904
958	.1270	.5490	.9709	.3929	.8148	.2368	.6587	.0807	.5027	.9246	.3466	.7685	.1905
961	.1271	.5490	.9710	.3929	.8149	.2369	.6588	.0808	.5028	.9247	.3467	.7686	.1906
964	.1271	.5491	.9711	.3930	.8150	.2370	.6589	.0809	.5028	.9248	.3468	.7687	.1907
967	.1272	.5492	.9711	.3931	.8151	.2370	.6590	.0810	.5029	.9249	.3469	.7688	.1908
421970	10.1273	10.5493	10.9712	11.3932	11.8152	12.2371	12.6591	13.0811	13.5030	13.9250	14.3470	14.7690	15.1909
973	.1274	.5493	.9713	.3933	.8152	.2372	.6592	.0812	.5031	.9251	.3471	.7691	.1910
976	.1274	.5494	.9714	.3934	.8153	.2373	.6593	.0813	.5032	.9252	.3472	.7692	.1911
979	.1275	.5495	.9715	.3934	.8154	.2374	.6594	.0813	.5033	.9253	.3473	.7693	.1912
982	.1276	.5496	.9715	.3935	.8155	.2375	.6595	.0814	.5034	.9254	.3474	.7694	.1914
421985	10.1276	10.5496	10.9716	11.3936	11.8156	12.2376	12.6596	13.0815	13.5035	13.9255	14.3475	14.7695	15.1915
988	.1277	.5497	.9717	.3937	.8157	.2377	.6596	.0816	.5036	.9256	.3476	.7696	.1916
991	.1278	.5498	.9718	.3938	.8157	.2377	.6597	.0817	.5037	.9257	.3477	.7697	.1917
994	.1279	.5499	.9718	.3938	.8158	.2378	.6598	.0818	.5038	.9258	.3478	.7698	.1918
997	.1279	.5499	.9719	.3939	.8159	.2379	.6599	.0819	.5039	.9259	.3479	.7699	.1919
422000	10.1280	10.5500	10.9720	11.3940	11.8160	12.2380	12.6600	13.0820	13.5040	13.9260	14.3480	14.7700	15.1920

MEGACYCLES PER SECOND

HARMONICS

BASIC FREQ.	37	38	39	40	41	42	43	44	45	46	47	48	50
421700	15.6029	16.0246	16.4463	16.8680	17.2897	17.7114	18.1331	18.5548	18.9765	19.3982	19.8199	20.2416	21.0850
703	.6030	.0247	.4464	.8681	.2898	.7115	.1332	.5549	.9766	.3983	.8200	.2417	.0852
706	.6031	.0248	.4465	.8682	.2899	.7117	.1334	.5551	.9768	.3985	.8202	.2419	.0853
709	.6032	.0249	.4467	.8684	.2901	.7118	.1335	.5552	.9769	.3986	.8203	.2420	.0855
712	.6033	.0251	.4468	.8685	.2902	.7119	.1336	.5553	.9770	.3988	.8205	.2422	.0856
421715	15.6035	16.0252	16.4469	16.8686	17.2903	17.7120	18.1337	18.5555	18.9772	19.3989	19.8206	20.2423	21.0858
718	.6036	.0253	.4470	.8687	.2904	.7122	.1339	.5556	.9773	.3990	.8207	.2425	.0859
721	.6037	.0254	.4471	.8688	.2906	.7123	.1340	.5557	.9774	.3992	.8209	.2426	.0861
724	.6038	.0255	.4472	.8690	.2907	.7124	.1341	.5559	.9776	.3993	.8210	.2428	.0862
727	.6039	.0256	.4474	.8691	.2908	.7125	.1343	.5560	.9777	.3994	.8212	.2429	.0864
421730	15.6040	16.0257	16.4475	16.8692	17.2909	17.7127	18.1344	18.5561	18.9779	19.3996	19.8213	20.2430	21.0865
733	.6041	.0259	.4476	.8693	.2911	.7128	.1345	.5563	.9780	.3997	.8215	.2432	.0867
736	.6042	.0260	.4477	.8694	.2912	.7129	.1346	.5564	.9781	.3999	.8216	.2433	.0868
739	.6043	.0261	.4478	.8696	.2913	.7130	.1348	.5565	.9783	.4000	.8217	.2435	.0870
742	.6045	.0262	.4479	.8697	.2914	.7132	.1349	.5566	.9784	.4001	.8219	.2436	.0871
421745	15.6046	16.0263	16.4481	16.8698	17.2915	17.7133	18.1350	18.5568	18.9785	19.4003	19.8220	20.2438	21.0873
748	.6047	.0264	.4482	.8699	.2917	.7134	.1352	.5569	.9787	.4004	.8222	.2439	.0874
751	.6048	.0265	.4483	.8700	.2918	.7135	.1353	.5570	.9788	.4005	.8223	.2440	.0876
754	.6049	.0267	.4484	.8702	.2919	.7137	.1354	.5572	.9789	.4007	.8224	.2442	.0877
757	.6050	.0268	.4485	.8703	.2920	.7138	.1356	.5573	.9791	.4008	.8226	.2443	.0879
421760	15.6051	16.0269	16.4486	16.8704	17.2922	17.7139	18.1357	18.5574	18.9792	19.4010	19.8227	20.2445	21.0880
763	.6052	.0270	.4488	.8705	.2923	.7140	.1358	.5576	.9793	.4011	.8229	.2446	.0882
766	.6053	.0271	.4489	.8706	.2924	.7142	.1359	.5577	.9795	.4012	.8230	.2448	.0883
769	.6055	.0272	.4490	.8708	.2925	.7143	.1361	.5578	.9796	.4014	.8231	.2449	.0885
772	.6056	.0273	.4491	.8709	.2927	.7144	.1362	.5580	.9797	.4015	.8233	.2451	.0886
421775	15.6057	16.0275	16.4492	16.8710	17.2928	17.7146	18.1363	18.5581	18.9799	19.4017	19.8234	20.2452	21.0888
778	.6058	.0276	.4493	.8711	.2929	.7147	.1365	.5582	.9800	.4018	.8236	.2453	.0889
781	.6059	.0277	.4495	.8712	.2930	.7148	.1366	.5584	.9801	.4019	.8237	.2455	.0891
784	.6060	.0278	.4496	.8714	.2931	.7149	.1367	.5585	.9803	.4021	.8238	.2456	.0892
787	.6061	.0279	.4497	.8715	.2933	.7151	.1368	.5586	.9804	.4022	.8240	.2458	.0894
421790	15.6062	16.0280	16.4498	16.8716	17.2934	17.7152	18.1370	18.5588	18.9806	19.4023	19.8241	20.2459	21.0895
793	.6063	.0281	.4499	.8717	.2935	.7153	.1371	.5589	.9807	.4025	.8243	.2461	.0897
796	.6065	.0282	.4500	.8718	.2936	.7154	.1372	.5590	.9808	.4026	.8244	.2462	.0898
799	.6066	.0284	.4502	.8720	.2938	.7156	.1374	.5592	.9810	.4028	.8246	.2464	.0900
802	.6067	.0285	.4503	.8721	.2939	.7157	.1375	.5593	.9811	.4029	.8247	.2465	.0901
421805	15.6068	16.0286	16.4504	16.8722	17.2940	17.7158	18.1376	18.5594	18.9812	19.4030	19.8248	20.2466	21.0903
808	.6069	.0287	.4505	.8723	.2941	.7159	.1377	.5596	.9814	.4032	.8250	.2468	.0904
811	.6070	.0288	.4506	.8724	.2943	.7161	.1379	.5597	.9815	.4033	.8251	.2469	.0906
814	.6071	.0289	.4507	.8726	.2944	.7162	.1380	.5598	.9816	.4034	.8253	.2471	.0907
817	.6072	.0290	.4509	.8727	.2945	.7163	.1381	.5599	.9818	.4036	.8254	.2472	.0909
421820	15.6073	16.0292	16.4510	16.8728	17.2946	17.7164	18.1383	18.5601	18.9819	19.4037	19.8255	20.2474	21.0910
823	.6075	.0293	.4511	.8729	.2947	.7166	.1384	.5602	.9820	.4039	.8257	.2475	.0912
826	.6076	.0294	.4512	.8730	.2949	.7167	.1385	.5603	.9822	.4040	.8258	.2476	.0913
829	.6077	.0295	.4513	.8732	.2950	.7168	.1386	.5605	.9823	.4041	.8260	.2478	.0915
832	.6078	.0296	.4514	.8733	.2951	.7169	.1388	.5606	.9824	.4043	.8261	.2479	.0916
421835	15.6079	16.0297	16.4516	16.8734	17.2952	17.7171	18.1389	18.5607	18.9826	19.4044	19.8262	20.2481	21.0918
838	.6080	.0298	.4517	.8735	.2954	.7172	.1390	.5609	.9827	.4045	.8264	.2482	.0919
841	.6081	.0300	.4518	.8736	.2955	.7173	.1392	.5610	.9828	.4047	.8265	.2484	.0921
844	.6082	.0301	.4519	.8738	.2956	.7174	.1393	.5611	.8930	.4048	.8267	.2485	.0922
847	.6083	.0302	.4520	.8739	.2957	.7176	.1394	.5613	.9831	.4050	.8268	.2487	.0924
421850	15.6085	16.0303	16.4522	16.8740	17.2959	17.7177	18.1396	18.5614	18.9833	19.4051	19.8270	20.2488	21.0925
853	.6086	.0304	.4523	.8741	.2960	.7178	.1397	.5615	.9834	.4052	.8271	.2489	.0927
856	.6087	.0305	.4524	.8742	.2961	.7180	.1398	.5617	.9835	.4054	.8272	.2491	.0928
859	.6088	.0306	.4525	.8744	.2962	.7181	.1399	.5618	.9837	.4055	.8274	.2492	.0930
862	.6089	.0308	.4526	.8745	.2963	.7182	.1401	.5619	.9838	.4057	.8275	.2494	.0931
421865	15.6090	16.0309	16.4527	16.8746	17.2965	17.7183	18.1402	18.5621	18.9839	19.4058	19.8277	20.2495	21.0933
868	.6091	.0310	.4529	.8747	.2966	.7185	.1403	.5622	.9841	.4059	.8278	.2497	.0934
871	.6092	.0311	.4530	.8748	.2967	.7186	.1405	.5623	.9842	.4061	.8279	.2498	.0936
874	.6093	.0312	.4531	.8750	.2968	.7187	.1406	.5625	.9843	.4062	.8281	.2500	.0937
877	.6094	.0313	.4532	.8751	.2970	.7188	.1407	.5626	.9845	.4063	.8282	.2501	.0939
421880	15.6096	16.0314	16.4533	16.8752	17.2971	17.7190	18.1408	18.5627	18.9846	19.4065	19.8284	20.2502	21.0940
883	.6097	.0316	.4534	.8753	.2972	.7191	.1410	.5629	.9847	.4066	.8285	.2504	.0942
886	.6098	.0317	.4536	.8754	.2973	.7192	.1411	.5630	.9849	.4068	.8286	.2505	.0943
889	.6099	.0318	.4537	.8756	.2974	.7193	.1412	.5631	.9850	.4069	.8288	.2507	.0945
892	.6100	.0319	.4538	.8757	.2976	.7195	.1414	.5632	.9851	.4070	.8289	.2508	.0946
421895	15.6101	16.0320	16.4539	16.8758	17.2977	17.7196	18.1415	18.5634	18.9853	19.4072	19.8291	20.2510	21.0948
898	.6102	.0321	.4540	.8759	.2978	.7197	.1416	.5635	.9854	.4073	.8292	.2511	.0949
901	.6103	.0322	.4541	.8760	.2979	.7198	.1417	.5636	.9855	.4074	.8293	.2512	.0951
904	.6104	.0324	.4543	.8762	.2981	.7200	.1419	.5638	.9857	.4076	.8295	.2514	.0952
907	.6106	.0325	.4544	.8763	.2982	.7201	.1420	.5639	.9858	.4077	.8296	.2515	.0954
421910	15.6107	16.0326	16.4545	16.8764	17.2983	17.7202	18.1421	18.5640	18.9860	19.4079	19.8298	20.2517	21.0955
913	.6108	.0327	.4546	.8765	.2984	.7203	.1423	.4652	.9861	.4080	.8299	.2518	.0957
916	.6109	.0328	.4547	.8766	.2986	.7205	.1424	.5643	.9862	.4081	.8301	.2520	.0958
919	.6110	.0329	.4548	.8768	.2987	.7206	.1425	.5644	.9864	.4083	.8302	.2521	.0960
922	.6111	.0330	.4550	.8769	.2988	.7207	.1426	.5646	.9865	.4084	.8303	.2523	.0961
421925	15.6112	16.0332	16.4551	16.8770	17.2989	17.7209	18.1428	18.5647	18.9866	19.4086	19.8305	20.2524	21.0963
928	.6113	.0333	.4552	.8771	.2990	.7210	.1429	.5648	.9868	.4087	.8306	.2525	.0964
931	.6114	.0334	.4553	.8772	.2992	.7211	.1430	.5650	.9869	.4088	.8308	.2527	.0966
934	.6116	.0335	.4554	.8774	.2993	.7212	.1432	.5651	.9870	.4090	.8309	.2528	.0967
937	.6117	.0336	.4555	.8775	.2994	.7214	.1433	.5652	.9872	.4091	.8310	.2530	.0969
421940	15.6118	16.0337	16.4557	16.8776	17.2995	17.7215	18.1434	18.5654	18.9873	19.4092	19.8312	20.2531	21.0970
943	.6119	.0338	.4558	.8777	.2997	.7216	.1435	.5655	.9874	.4094	.8313	.2533	.0972
946	.6120	.0339	.4559	.8778	.2998	.7217	.1437	.5656	.9876	.4095	.8315	.2534	.0973
949	.6121	.0341	.4560	.8780	.2999	.7219	.1438	.5658	.9877	.4097	.8316	.2536	.0975
952	.6122	.0342	.4561	.8781	.3000	.7220	.1439	.5659	.9878	.4098	.8317	.2537	.0976
421955	15.6123	16.0343	16.4562	16.8782	17.3002	17.7221	18.1441	18.5660	18.9880	19.4099	19.8319	20.2538	21.0978
958	.9124	.0344	.4564	.8783	.3003	.7222	.1442	.5662	.9881	.4101	.8320	.2540	.0979
961	.6126	.0345	.4565	.8784	.3004	.7224	.1443	.5663	.9882	.4102	.8322	.2541	.0981
964	.6127	.0346	.4566	.8786	.3005	.7225	.1445	.5664	.9884	.4103	.8323	.2543	.0982
967	.6128	.0347	.4567	.8787	.3006	.7226	.1446	.5665	.9885	.4105	.8324	.2544	.0984
421970	15.6129	16.0349	16.4568	16.8788	17.3008	17.7227	18.1447	18.5667	18.9887	19.4106	19.8326	20.2546	21.0985
973	.6130	.0350	.4569	.8789	.3009	.7229	.1448	.5668	.9888	.4108	.8327	.2547	.0987
976	.6131	.0351	.4571	.8790	.3010	.7230	.1450	.5669	.9889	.4109	.8329	.2548	.0988
979	.6132	.0352	.4562	.8792	.3011	.7231	.1451	.5671	.9891	.4110	.8330	.2550	.0990
982	.6133	.0353	.4573	.8793	.3013	.7232	.1452	.5672	.9892	.4112	.8332	.2551	.0991
421985	15.6134	16.0354	16.4574	16.8794	17.3014	17.7234	18.1454	18.5673	18.9893	19.4113	19.8333	20.2553	21.0993
988	.6136	.0355	.4575	.8795	.3015	.7235	.1455	.5675	.9895	.4114	.8334	.2554	.0994
991	.6137	.0357	.4576	.8796	.3016	.7236	.1456	.5676	.9896	.4116	.8336	.2556	.0996
994	.6138	.0358	.4578	.8798	.3018	.7237	.1457	.5677	.9897	.4117	.8337	.2557	.0997
997	.6139	.0359	.4579	.8799	.3019	.7239	.1459	.5679	.9899	.4119	.8339	.2559	.0999
422000	15.6140	16.0360	16.4580	16.8800	17.3020	17.7240	18.1460	18.5680	18.9900	19.4120	19.8340	20.2560	21.1000

MEGACYCLES PER SECOND

H A R M O N I C S

BASIC FREQ.	24	25	26	27	28	29	30	31	32	33	34	35	36
422000	10.1280	10.5500	10.9720	11.3940	11.8160	12.2380	12.6600	13.0820	13.5040	13.9260	14.3480	14.7700	15.1920
003	.1281	.5501	.9721	.3941	.8161	.2381	.6601	.0821	.5041	.9261	.3481	.7701	.1921
006	.1281	.5502	.9722	.3942	.8162	.2382	.6602	.0822	.5042	.9262	.3482	.7702	.1922
009	.1282	.5502	.9722	.3942	.8163	.2383	.6603	.0823	.5043	.9263	.3483	.7703	.1923
012	.1283	.5503	.9723	.3943	.8163	.2383	.6604	.0824	.5044	.9264	.3484	.7704	.1924
422015	10.1284	10.5504	10.9724	11.3944	11.8164	12.2384	12.6605	13.0825	13.5045	13.9265	14.3485	14.7705	15.1925
018	.1284	.5505	.9725	.3945	.8165	.2385	.6605	.0826	.5046	.9266	.3486	.7706	.1926
021	.1285	.5505	.9725	.3946	.8166	.2386	.6606	.0827	.5047	.9267	.3487	.7707	.1928
024	.1286	.5506	.9726	.3946	.8167	.2387	.6607	.0827	.5048	.9268	.3488	.7708	.1929
027	.1286	.5507	.9727	.3947	.8168	.2388	.6608	.0828	.5049	.9269	.3489	.7709	.1930
422030	10.1287	10.5508	10.9728	11.3948	11.8168	12.2389	12.6609	13.0829	13.5050	13.9270	14.3490	14.7711	15.1931
033	.1288	.5508	.9729	.3949	.8169	.2390	.6610	.0830	.5051	.9271	.3491	.7712	.1932
036	.1289	.5509	.9729	.3950	.8170	.2390	.6611	.0831	.5052	.9272	.3492	.7713	.1933
039	.1289	.5510	.9730	.3951	.8171	.2391	.6612	.0832	.5052	.9273	.3493	.7714	.1934
042	.1290	.5511	.9731	.3951	.8172	.2392	.6613	.0833	.5053	.9274	.3494	.7715	.1935
422045	10.1291	10.5511	10.9732	11.3952	11.8173	12.2393	12.6614	13.0834	13.5054	13.9275	14.3495	14.7716	15.1936
048	.1292	.5512	.9732	.3953	.8173	.2394	.6614	.0835	.5055	.9276	.3496	.7717	.1937
051	.1292	.5513	.9733	.3954	.8174	.2395	.6615	.0836	.5056	.9277	.3497	.7718	.1938
054	.1293	.5514	.9734	.3955	.8175	.2396	.6616	.0837	.5057	.9278	.3498	.7719	.1939
057	.1294	.5514	.9735	.3955	.8176	.2397	.6617	.0838	.5058	.9279	.3499	.7720	.1941
422060	10.1294	10.5515	10.9736	11.3956	11.8177	12.2397	12.6618	13.0839	13.5059	13.9280	14.3500	14.7721	15.1942
063	.1295	.5516	.9736	.3957	.8178	.2398	.6619	.0840	.5060	.9281	.3501	.7722	.1943
066	.1296	.5517	.9737	.3958	.8178	.2399	.6620	.0840	.5061	.9282	.3502	.7723	.1944
069	.1297	.5517	.9738	.3959	.8179	.2400	.6621	.0841	.5062	.9283	.3503	.7724	.1945
072	.1297	.5518	.9739	.3959	.8180	.2401	.6622	.0842	.5063	.9284	.3504	.7725	.1946
422075	10.1298	10.5519	10.9740	11.3960	11.8181	12.2402	12.6623	13.0843	13.5064	13.9285	14.3506	14.7726	15.1947
078	.1299	.5520	.9740	.3961	.8182	.2403	.6623	.0844	.5065	.9286	.3507	.7727	.1948
081	.1299	.5520	.9741	.3962	.8183	.2403	.6624	.0845	.5066	.9287	.3508	.7728	.1949
084	.1300	.5521	.9742	.3963	.8184	.2404	.6625	.0846	.5067	.9288	.3509	.7729	.1950
087	.1301	.5522	.9743	.3963	.8184	.2405	.6626	.0847	.5068	.9289	.3510	.7730	.1951
422090	10.1302	10.5523	10.9743	11.3964	11.8185	12.2406	12.6627	13.0848	13.5069	13.9290	14.3511	14.7732	15.1952
093	.1302	.5523	.9744	.3965	.8186	.2407	.6628	.0849	.5070	.9291	.3512	.7733	.1953
096	.1303	.5524	.9745	.3966	.8187	.2408	.6629	.0850	.5071	.9292	.3513	.7734	.1955
099	.1304	.5525	.9746	.3967	.8188	.2409	.6630	.0851	.5072	.9293	.3514	.7735	.1956
102	.1304	.5526	.9747	.3968	.8189	.2410	.6631	.0852	.5073	.9294	.3515	.7736	.1957
422105	10.1305	10.5526	10.9747	11.3968	11.8189	12.2410	12.6632	13.0853	13.5074	13.9295	14.3516	14.7737	15.1958
108	.1306	.5527	.9748	.3969	.8190	.2411	.6632	.0853	.5075	.9296	.3517	.7738	.1959
111	.1307	.5528	.9749	.3970	.8191	.2412	.6633	.0854	.5076	.9297	.3518	.7739	.1960
114	.1307	.5529	.9750	.3971	.8192	.2413	.6634	.0855	.5076	.9298	.3519	.7740	.1961
117	.1308	.5529	.9750	.3972	.8193	.2414	.6635	.0856	.5077	.9299	.3520	.7741	.1962
422120	10.1309	10.5530	10.9751	11.3972	11.8194	12.2415	12.6636	13.0857	13.5078	13.9300	14.3521	14.7742	15.1963
123	.1310	.5531	.9752	.3973	.8194	.2416	.6637	.0858	.5079	.9301	.3522	.7743	.1964
126	.1310	.5532	.9753	.3974	.8195	.2417	.6638	.0859	.5080	.9302	.3523	.7744	.1965
129	.1311	.5532	.9754	.3975	.8196	.2417	.6639	.0860	.5081	.9303	.3524	.7745	.1966
132	.1312	.5533	.9754	.3976	.8197	.2418	.6640	.0861	.5082	.9304	.3525	.7746	.1968
422135	10.1312	10.5534	10.9755	11.3976	11.8198	12.2419	12.6641	13.0862	13.5083	13.9305	14.3526	14.7747	15.1969
138	.1313	.5535	.9756	.3977	.8199	.2420	.6641	.0863	.5084	.9306	.3527	.7748	.1970
141	.1314	.5535	.9757	.3978	.8199	.2421	.6642	.0864	.5085	.9307	.3528	.7749	.1971
144	.1315	.5536	.9757	.3979	.8200	.2422	.6643	.0865	.5086	.9308	.3529	.7750	.1972
147	.1315	.5537	.9758	.3980	.8201	.2423	.6644	.0866	.5087	.9309	.3530	.7751	.1973
422150	10.1316	10.5538	10.9759	11.3981	11.8202	12.2424	12.6645	13.0867	13.5088	13.9310	14.3531	14.7753	15.1974
153	.1317	.5538	.9760	.3981	.8203	.2424	.6646	.0867	.5089	.9310	.3532	.7754	.1975
156	.1317	.5539	.9761	.3982	.8204	.2425	.6647	.0868	.5090	.9311	.3533	.7755	.1976
159	.1318	.5540	.9761	.3983	.8205	.2426	.6648	.0869	.5091	.9312	.3534	.7756	.1977
162	.1319	.5541	.9762	.3984	.8205	.2427	.6649	.0870	.5092	.9313	.3535	.7757	.1978
422165	10.1320	10.5541	10.9763	11.3985	11.8206	12.2428	12.6650	13.0871	13.5093	13.9314	14.3536	14.7758	15.1979
168	.1320	.5542	.9764	.3985	.8207	.2429	.6650	.0872	.5094	.9315	.3537	.7759	.1980
171	.1321	.5543	.9764	.3986	.8208	.2430	.6651	.0873	.5095	.9316	.3538	.7760	.1982
174	.1322	.5544	.9765	.3987	.8209	.2430	.6652	.0874	.5096	.9317	.3539	.7761	.1983
177	.1322	.5544	.9766	.3988	.8210	.2431	.6653	.0875	.5097	.9318	.3540	.7762	.1984
422180	10.1323	10.5545	10.9767	11.3989	11.8210	12.2432	12.6654	13.0876	13.5098	13.9319	14.3541	14.7763	15.1985
183	.1324	.5546	.9768	.3989	.8211	.2433	.6655	.0877	.5099	.9320	.3542	.7764	.1986
186	.1325	.5547	.9768	.3990	.8212	.2434	.6656	.0878	.5100	.9321	.3543	.7765	.1987
189	.1325	.5547	.9769	.3991	.8213	.2435	.6657	.0879	.5100	.9322	.3544	.7766	.1988
192	.1326	.5548	.9770	.3992	.8214	.2436	.6658	.0880	.5101	.9323	.3545	.7767	.1989
422195	10.1327	10.5549	10.9771	11.3993	11.8215	12.2437	12.6659	13.0880	13.5102	13.9324	14.3546	14.7768	15.1990
198	.1328	.5550	.9771	.3993	.8215	.2437	.6659	.0881	.5103	.9325	.3547	.7769	.1991
201	.1328	.5550	.9772	.3994	.8216	.2438	.6660	.0882	.5104	.9326	.3548	.7770	.1992
204	.1329	.5551	.9773	.3995	.8217	.2439	.6661	.0883	.5105	.9327	.3549	.7771	.1993
207	.1330	.5552	.9774	.3996	.8218	.2440	.6662	.0884	.5106	.9328	.3550	.7772	.1995
422210	10.1330	10.5553	10.9775	11.3997	11.8219	12.2441	12.6663	13.0885	13.5107	13.9329	14.3551	14.7774	15.1996
213	.1331	.5553	.9775	.3998	.8220	.2442	.6664	.0886	.5108	.9330	.3552	.7775	.1997
216	.1332	.5554	.9776	.3998	.8220	.2443	.6665	.0887	.5109	.9331	.3553	.7776	.1998
219	.1333	.5555	.9777	.3999	.8221	.2444	.6666	.0888	.5110	.9332	.3554	.7777	.1999
222	.1333	.5556	.9778	.4000	.8222	.2444	.6667	.0889	.5111	.9333	.3555	.7778	.2000
422225	10.1334	10.5556	10.9779	11.4001	11.8223	12.2445	12.6668	13.0890	13.5112	13.9334	14.3557	14.7779	15.2001
228	.1335	.5557	.9779	.4002	.8224	.2446	.6668	.0891	.5113	.9335	.3558	.7780	.2002
231	.1335	.5558	.9780	.4002	.8225	.2447	.6669	.0892	.5114	.9336	.3559	.7781	.2003
234	.1336	.5559	.9781	.4003	.8226	.2448	.6670	.0893	.5115	.9337	.3560	.7782	.2004
237	.1337	.5559	.9782	.4004	.8226	.2449	.6671	.0893	.5116	.9338	.3561	.7783	.2005
422240	10.1338	10.5560	10.9782	11.4005	11.8227	12.2450	12.6672	13.0894	13.5117	13.9339	14.3562	14.7784	15.2006
243	.1338	.5561	.9783	.4006	.8228	.2450	.6673	.0895	.5118	.9340	.3563	.7785	.2007
246	.1339	.5562	.9784	.4006	.8229	.2451	.6674	.0896	.5119	.9341	.3564	.7786	.2009
249	.1340	.5562	.9785	.4007	.8230	.2452	.6675	.0897	.5120	.9342	.3565	.7787	.2010
252	.1340	.5563	.9786	.4008	.8231	.2453	.6676	.0898	.5121	.9343	.3566	.7788	.2011
422255	10.1341	10.5564	10.9786	11.4009	11.8231	12.2454	12.6677	13.0899	13.5122	13.9344	14.3567	14.7789	15.2012
258	.1342	.5565	.9787	.4010	.8232	.2455	.6677	.0900	.5123	.9345	.3568	.7790	.2013
261	.1343	.5565	.9788	.4010	.8233	.2456	.6678	.0901	.5124	.9346	.3569	.7791	.2014
264	.1343	.5566	.9789	.4011	.8234	.2457	.6679	.0902	.5124	.9347	.3570	.7792	.2015
267	.1344	.5567	.9789	.4012	.8235	.2457	.6680	.0903	.5125	.9348	.3571	.7793	.2016
422270	10.1345	10.5568	10.9790	11.4013	11.8236	12.2458	12.6681	13.0904	13.5126	13.9349	14.3572	14.7795	15.2017
273	.1346	.5568	.9791	.4014	.8236	.2459	.6682	.0905	.5127	.9350	.3573	.7796	.2018
276	.1346	.5569	.9792	.4015	.8237	.2460	.6683	.0906	.5128	.9351	.3574	.7797	.2019
279	.1347	.5570	.9793	.4015	.8238	.2461	.6684	.0906	.5129	.9352	.3575	.7798	.2020
282	.1348	.5571	.9793	.4016	.8239	.2462	.6685	.0907	.5130	.9353	.3576	.7799	.2022
422285	10.1348	10.5571	10.9794	11.4017	11.8240	12.2463	12.6686	13.0908	13.5131	13.9354	14.3577	14.7800	15.2023
288	.1349	.5572	.9795	.4018	.8241	.2464	.6686	.0909	.5132	.9355	.3578	.7801	.2024
291	.1350	.5573	.9796	.4019	.8241	.2464	.6687	.0910	.5133	.9356	.3579	.7802	.2025
294	.1351	.5574	.9796	.4019	.8242	.2465	.6686	.0911	.5134	.9357	.3580	.7803	.2026
297	.1351	.5574	.9797	.4020	.8243	.2466	.6689	.0912	.5135	.9358	.3581	.7804	.2027
422300	10.1352	10.5575	10.9798	11.4021	11.8244	12.2467	12.6690	13.0913	13.5136	13.9359	14.3582	14.7805	15.2028

MEGACYCLES PER SECOND

H A R M O N I C S

BASIC FREQ.	37	38	39	40	41	42	43	44	45	46	47	48	50
422000	15.6140	16.0360	16.4580	16.8800	17.3020	17.7240	18.1460	18.5680	18.9900	19.4120	19.8340	20.2560	21.1000
003	.6141	.0361	.4581	.8801	.3021	.7241	.1461	.5681	.9901	.4121	.8341	.2561	.1002
006	.6142	.0362	.4582	.8802	.3022	.7243	.1463	.5683	.9903	.4123	.8343	.2563	.1003
009	.6143	.0363	.4584	.8804	.3024	.7244	.1464	.5684	.9904	.4124	.8344	.2564	.1005
012	.6144	.0365	.4585	.8805	.3025	.7245	.1465	.5685	.9905	.4126	.8346	.2566	.1006
422015	15.6146	16.0366	16.4586	16.8806	17.3026	17.7246	18.1466	18.5687	18.9907	19.4127	19.8347	20.2567	21.1008
018	.6147	.0367	.4587	.8807	.3027	.7248	.1468	.5688	.9908	.4128	.8348	.2569	.1009
021	.6148	.0368	.4588	.8808	.3029	.7249	.1469	.5689	.9909	.4130	.8350	.2570	.1011
024	.6149	.0369	.4589	.8810	.3030	.7250	.1470	.5691	.9911	.4131	.8351	.2572	.1012
027	.6150	.0370	.4591	.8811	.3031	.7251	.1472	.5692	.9912	.4132	.8353	.2573	.1014
422030	15.6151	16.0371	16.4592	16.8812	17.3032	17.7253	18.1473	18.5693	18.9914	19.4134	19.8354	20.2574	21.1015
033	.6152	.0373	.4593	.8813	.3034	.7254	.1474	.5695	.9915	.4135	.8356	.2576	.1017
036	.6153	.0374	.4594	.8814	.3035	.7255	.1475	.5696	.9916	.4137	.8357	.2577	.1018
039	.6154	.0375	.4595	.8816	.3036	.7256	.1477	.5697	.9918	.4138	.8358	.2579	.1020
042	.6156	.0376	.4596	.8817	.3037	.7258	.1478	.5698	.9919	.4139	.8360	.2580	.1021
422045	15.6157	16.0377	16.4598	16.8818	17.3038	17.7259	18.1479	18.5700	18.9920	19.4141	19.8361	20.2582	21.1023
048	.6158	.0378	.4599	.8819	.3040	.7260	.1481	.5701	.9922	.4142	.8363	.2583	.1024
051	.6159	.0379	.4600	.8820	.3041	.7261	.1482	.5702	.9923	.4143	.8364	.2584	.1026
054	.6160	.0381	.4601	.8822	.3042	.7263	.1483	.5704	.9924	.4145	.8365	.2586	.1027
057	.6161	.0382	.4602	.8823	.3043	.7264	.1485	.5705	.9926	.4146	.8367	.2587	.1029
422060	15.6162	16.0383	16.4603	16.8824	17.3045	17.7265	18.1486	18.5706	18.9927	19.4148	19.8368	20.2589	21.1030
063	.6163	.0384	.4605	.8825	.3046	.7266	.1487	.5708	.9928	.4149	.8370	.2590	.1032
066	.6164	.0385	.4606	.8826	.3047	.7268	.1488	.5709	.9930	.4150	.8371	.2592	.1033
069	.6166	.0386	.4607	.8828	.3048	.7269	.1490	.5710	.9931	.4152	.8372	.2593	.1035
072	.6167	.0387	.4608	.8829	.3050	.7270	.1491	.5712	.9932	.4153	.8374	.2595	.1036
422075	15.6168	16.0389	16.4609	16.8830	17.3051	17.7272	18.1492	18.5713	18.9934	19.4155	19.8375	20.2596	21.1038
078	.6169	.0390	.4610	.8831	.3052	.7273	.1494	.5714	.9935	.4156	.8377	.2597	.1039
081	.6170	.0391	.4612	.8832	.3053	.7274	.1495	.5716	.9936	.4157	.8378	.2599	.1041
084	.6171	.0392	.4613	.8834	.3054	.7275	.1496	.5717	.9938	.4159	.8379	.2600	.1042
087	.6172	.0393	.4614	.8835	.3056	.7277	.1497	.5718	.9939	.4160	.8381	.2602	.1044
422090	15.6173	16.0394	16.4615	16.8836	17.3057	17.7278	18.1499	18.5720	18.9941	19.4161	19.8382	20.2603	21.1045
093	.6174	.0395	.4616	.8837	.3058	.7279	.1500	.5721	.9942	.4163	.8384	.2605	.1047
096	.6176	.0396	.4617	.8838	.3059	.7280	.1501	.5722	.9943	.4164	.8385	.2606	.1048
099	.6177	.0398	.4619	.8840	.3061	.7282	.1503	.5724	.9945	.4166	.8387	.2608	.1050
102	.6178	.0399	.4620	.8841	.3062	.7283	.1504	.5725	.9946	.4167	.8388	.2609	.1051
422105	15.6179	16.0400	16.4621	16.8842	17.3063	17.7284	18.1505	18.5726	18.9947	19.4168	19.8389	20.2610	21.1053
108	.6180	.0401	.4622	.8843	.3064	.7285	.1506	.5728	.9949	.4170	.8391	.2612	.1054
111	.6181	.0402	.4623	.8844	.3066	.7287	.1508	.5729	.9950	.4171	.8392	.2613	.1056
114	.6182	.0403	.4624	.8846	.3067	.7288	.1509	.5730	.9951	.4172	.8394	.2615	.1057
117	.6183	.0404	.4626	.8847	.3068	.7289	.1510	.5731	.9953	.4174	.8395	.2616	.1059
422120	15.6184	16.0406	16.4627	16.8848	17.3069	17.7290	18.1512	18.5733	18.9954	19.4175	19.8396	20.2618	21.1060
123	.6186	.0407	.4628	.8849	.3070	.7292	.1513	.5734	.9955	.4177	.8398	.2619	.1062
126	.6187	.0408	.4629	.8850	.3072	.7293	.1514	.5735	.9957	.4178	.8399	.2620	.1063
129	.6188	.0409	.4630	.8852	.3073	.7294	.1515	.5737	.9958	.4179	.8401	.2622	.1065
132	.6189	.0410	.4631	.8853	.3074	.7295	.1517	.5738	.9959	.4181	.8402	.2623	.1066
422135	15.6190	16.0411	16.4633	16.8854	17.3075	17:7297	18.1518	18.5739	18.9961	19.4182	19.8403	20.2625	21.1068
138	.6191	.0412	.4634	.8855	.3077	.7298	.1519	.5741	.9962	.4183	.8405	.2626	.1069
141	.6192	.0414	.4635	.8856	.3078	.7299	.1521	.5742	.9963	.4185	.8406	.2628	.1071
144	.6193	.0415	.4636	.8858	.3079	.7300	.1522	.5743	.9965	.4186	.8408	.2629	.1072
147	.6194	.0416	.4637	.8859	.3080	.7302	.1523	.5745	.9966	.4188	.8409	.2631	.1074
422150	15.6196	16.0417	16.4639	16.8860	17.3082	17.7303	18.1525	18.5746	18.9968	19.4189	19.8411	20.2632	21.1075
153	.6197	.0418	.4640	.8861	.3083	.7304	.1526	.5747	.9969	.4190	.8412	.2633	.1077
156	.6198	.0419	.4641	.8862	.3084	.7306	.1527	.5749	.9970	.4192	.8413	.2635	.1078
159	.6199	.0420	.4642	.8864	.3085	.7307	.1528	.5750	.9972	.4193	.8415	.2636	.1080
162	.6200	.0422	.4643	.8865	.3086	.7308	.1530	.5751	.9973	.4195	.8416	.2638	.1081
422165	15.6201	16.0423	16.4644	16.8866	17.3088	17.7309	18.1531	18.5753	18.9974	19.4196	19.8418	20.2639	21.1083
168	.6202	.0424	.4646	.8867	.3089	.7311	.1532	.5754	.9976	.4197	.8419	.2641	.1084
171	.6203	.0425	.4647	.8868	.3090	.7312	.1534	.5755	.9977	.4199	.8420	.2642	.1086
174	.6204	.0426	.4648	.8870	.3091	.7313	.1535	.5757	.9978	.4200	.8422	.2644	.1087
177	.6205	.0427	.4649	.8871	.3093	.7314	.1536	.5758	.9980	.4201	.8423	.2645	.1089
422180	15.6207	16.0428	16.4650	16.8872	17.3094	17.7316	18.1537	18.5759	18.9981	19.4203	19.8425	20.2646	21.1090
183	.6208	.0430	.4651	.8873	.3095	.7317	.1539	.5761	.9982	.4204	.8426	.2648	.1092
186	.6209	.0431	.4653	.8874	.3096	.7318	.1540	.5762	.9984	.4206	.8427	.2649	.1093
189	.6210	.0432	.4654	.8876	.3097	.7319	.1541	.5763	.9985	.4207	.8429	.2651	.1095
192	.6211	.0433	.4655	.8877	.3099	.7321	.1543	.5764	.9986	.4208	.8430	.2652	.1096
422195	15.6212	16.0434	16.4656	16.8878	17.3100	17.7322	18.1544	18.5766	18.9988	19.4210	19.8432	20.2654	21.1098
198	.6213	.0435	.4657	.8879	.3101	.7323	.1545	.5767	.9989	.4211	.8433	.2655	.1099
201	.6214	.0436	.4658	.8880	.3102	.7324	.1546	.5768	.9990	.4212	.8434	.2656	.1101
204	.6215	.0438	.4660	.8882	.3104	.7326	.1548	.5770	.9992	.4214	.8436	.2658	.1102
207	.6217	.0439	.4661	.8883	.3105	.7327	.1549	.5771	.9993	.4215	.8437	.2659	.1104
422210	15.6218	16.0440	16.4662	16.8884	17.3106	17.7328	18.1550	18.5772	18.9995	19.4217	19.8439	20.2661	21.1105
213	.6219	.0441	.4663	.8885	.3107	.7329	.1552	.5774	.9996	.4218	.8440	.2662	.1107
216	.6220	.0442	.4664	.8886	.3109	.7331	.1553	.5775	.9997	.4219	.8442	.2664	.1108
219	.6221	.0443	.4665	.8888	.3110	.7332	.1554	.5776	.9999	.4221	.8443	.2665	.1110
222	.6222	.0444	.4667	.8889	.3111	.7333	.1555	.5778	19.0000	.4222	.8444	.2667	.1111
422225	15.6223	16.0446	16.4668	16.8890	17.3112	17.7335	18.1557	18.5779	19.0001	19.4224	19.8446	20.2668	21.1113
228	.6224	.0447	.4669	.8891	.3113	.7336	.1558	.5780	.0003	.4225	.8447	.2669	.1114
231	.6225	.0448	.4670	.8892	.3115	.7337	.1559	.5782	.0004	.4226	.8449	.2671	.1116
234	.6227	.0449	.4671	.8894	.3116	.7338	.1561	.5783	.0005	.4228	.8450	.2672	.1117
237	.6228	.0450	.4672	.8895	.3117	.7340	.1562	.5784	.0007	.4229	.8451	.2674	.1119
422240	15.6229	16.0451	16.4674	16.8896	17.3118	17.7341	18.1563	18.5786	19.0008	19.4230	19.8453	20.2675	21.1120
243	.6230	.0452	.4675	.8897	.3120	.7342	.1564	.5787	.0009	.4232	.8454	.2677	.1122
246	.6231	.0453	.4676	.8898	.3121	.7343	.1566	.5788	.0011	.4233	.8456	.2678	.1123
249	.6232	.0455	.4677	.8900	.3122	.7345	.1567	.5790	.0012	.4235	.8457	.2680	.1125
252	.6233	.0456	.4678	.8901	.3123	.7346	.1568	.5791	.0013	.4236	.8458	.2681	.1126
422255	15.6234	16.0457	16.4679	16.8902	17.3125	17.7347	18.1570	18.5792	19.0015	19.4237	19.8460	20.2682	21.1128
258	.6235	.0458	.4681	.8903	.3126	.7348	.1571	.5794	.0016	.4239	.8461	.2684	.1129
261	.6237	.0459	.4682	.8904	.3127	.7350	.1572	.5795	.0017	.4240	.8463	.2685	.1131
264	.6238	.0460	.4683	.8906	.3128	.7351	.1574	.5796	.0019	.4241	.8464	.2687	.1132
267	.6239	.0461	.4684	.8907	.3129	.7352	.1575	.5797	.0020	.4243	.8465	.2688	.1134
422270	15.6240	16.0463	16.4685	16.8908	17.3131	17.7353	18.1576	18.5799	19.0022	19.4244	19.8467	20.2690	21.1135
273	.6241	.0464	.4686	.8909	.3132	.7355	.1577	.5800	.0023	.4246	.8468	.2691	.1137
276	.6242	.0465	.4688	.8910	.3133	.7356	.1579	.5801	.0024	.4247	.8470	.2692	.1138
279	.6243	.0466	.4689	.8912	.3134	.7357	.1580	.5803	.0026	.4248	.8471	.2694	.1140
282	.6244	.0467	.4690	.8913	.3136	.7358	.1581	.5804	.0027	.4250	.8473	.2695	.1141
422285	15.6245	16.0468	16.4691	16.8914	17.3137	17.7360	18.1583	18.5805	19.0028	19.4251	19.8474	20.2697	21.1143
288	.6247	.0469	.4692	.8915	.3138	.7361	.1584	.5807	.0030	.4252	.8475	.2698	.1144
291	.6248	.0471	.4693	.8916	.3139	.7362	.1585	.5808	.0031	.4254	.8477	.2700	.1146
294	.6249	.0472	.4695	.8918	.3141	.7363	.1586	.5809	.0032	.4255	.8478	.2701	.1147
297	.6250	.0473	.4696	.8919	.3142	.7365	.1588	.5811	.0034	.4257	.8480	.2703	.1149
422300	15.6251	16.0474	16.4697	16.8920	17.3143	17.7366	18.1589	18.5812	19.0035	19.4258	19.8481	20.2704	21.1150

MEGACYCLES PER SECOND

HARMONICS

BASIC FREQ.	24	25	26	27	28	29	30	31	32	33	34	35	36
422300	10.1352	10.5575	10.9798	11.4021	11.8244	12.2467	12.6690	13.0913	13.5136	13.9359	14.3582	14.7805	15.2028
303	.1353	.5576	.9799	.4022	.8245	.3468	.6691	.0914	.5137	.9360	.3583	.7806	.2029
306	.1353	.5577	.9800	.4023	.8246	.2469	.6692	.0915	.5138	.9361	.3584	.7807	.2030
309	.1354	.5577	.9800	.4023	.8247	.2470	.6693	.0916	.5139	.9362	.3585	.7808	.2031
312	.1355	.5578	.9801	.4024	.8247	.2470	.6694	.0917	.5140	.9363	.3586	.7809	.2032
422315	10.1356	10.5579	10.9802	11.4025	11.8248	12.2471	12.6695	13.0918	13.5141	13.9364	14.3587	14.7810	15.2033
318	.1356	.5580	.9803	.4026	.8249	.2472	.6695	.0919	.5142	.9365	.3588	.7811	.2034
321	.1357	.5580	.9803	.4027	.8250	.2473	.6696	.0920	.5143	.9366	.3589	.7812	.2036
324	.1358	.5581	.9804	.4027	.8251	.2474	.6697	.0920	.5144	.9367	.3590	.7813	.2037
327	.1358	.5582	.9805	.4028	.8252	.2475	.6698	.0921	.5145	.9368	.3591	.7814	.2038
422330	10.1359	10.5583	10.9806	11.4029	11.8252	12.2476	12.6699	13.0922	13.5146	13.9369	14.3592	14.7816	15.2039
333	.1360	.5583	.9807	.4030	.8253	.2477	.6700	.0923	.5147	.9370	.3593	.7817	.2040
336	.1361	.5584	.9807	.4031	.8254	.2477	.6701	.0924	.5148	.9371	.3594	.7818	.2041
339	.1361	.5585	.9808	.4032	.8255	.2478	.6702	.0925	.5148	.9372	.3595	.7819	.2042
342	.1362	.5586	.9809	.4032	.8256	.2479	.6703	.0926	.5159	.9373	.3596	.7820	.2043
422345	10.1363	10.5586	10.9810	11.4033	11.8257	12.2480	12.6704	13.0927	13.5150	13.9374	14.3597	14.7821	15.2044
348	.1364	.5587	.9810	.4034	.8257	.2481	.6704	.0928	.5151	.9375	.3598	.7822	.2045
351	.1364	.5588	.9811	.4035	.8258	.2482	.6705	.0929	.5152	.9376	.3599	.7823	.2046
354	.1365	.5589	.9812	.4036	.8259	.2483	.6706	.0930	.5153	.8377	.3600	.7824	.2047
357	.1366	.5589	.9813	.4036	.8260	.2484	.6707	.0931	.5154	.9378	.3601	.7825	.2049
422360	10.1366	10.5590	10.9814	11.4037	11.8261	12.2484	12.6708	13.0932	13.5155	13.9379	14.3602	14.7826	15.2050
363	.1367	.5591	.9814	.4038	.8262	.2485	.6709	.0933	.5156	.9380	.3603	.7827	.2051
366	.1368	.5592	.9815	.4039	.8262	.2486	.6710	.0933	.5157	.9381	.3604	.7828	.2052
369	.1369	.5592	.9816	.4040	.8263	.2487	.6711	.0934	.5158	.9382	.3605	.7829	.2053
372	.1369	.5593	.9817	.4040	.8264	.2488	.6712	.0935	.5159	.9383	.3606	.7830	.2054
422375	10.1370	10.5594	10.9818	11.4041	11.8265	12.2489	12.6713	13.0936	13.5160	13.9384	14.3608	14.7831	15.2055
378	.1371	.5595	.9818	.4042	.8266	.2490	.6713	.0937	.5161	.9385	.3609	.7832	.2056
381	.1371	.5595	.9819	.4043	.8267	.2490	.6714	.0938	.5162	.9386	.3610	.7833	.2057
384	.1372	.5596	.9820	.4044	.8268	.2491	.6715	.0939	.5163	.9387	.3611	.7834	.2058
387	.1373	.5597	.9821	.4044	.8268	.2492	.6716	.0940	.5164	.9388	.3612	.7835	.2059
422390	10.1374	10.5598	10.9821	11.4045	11.8269	12.2493	12.6717	13.0941	13.5165	13.9389	14.3613	14.7837	15.2060
393	.1374	.5598	.9822	.4046	.8270	.2494	.6718	.0942	.5166	.9390	.3614	.7838	.2061
396	.1375	.5599	.9823	.4047	.8271	.2495	.6719	.0943	.5167	.9391	.3615	.7839	.2063
399	.1376	.5600	.9824	.4048	.8272	.2496	.6720	.0944	.5168	.9392	.3616	.7840	.2064
402	.1376	.5601	.9825	.4049	.8273	.2497	.6721	.0945	.5169	.9393	.3617	.7841	.2065
422405	10.1377	10.5601	10.9825	11.4049	11.8273	12.2497	12.6722	13.0946	13.5170	13.9394	14.3618	14.7842	15.2066
408	.1378	.5602	.9826	.4050	.8274	.2498	.6722	.0946	.5171	.9395	.3619	.7843	.2067
411	.1379	.5603	.9827	.4051	.8275	.2499	.6723	.0947	.5172	.9396	.3620	.7844	.2068
414	.1379	.5604	.9828	.4052	.8276	.2500	.6724	.0948	.5172	.9397	.3621	.7845	.2069
417	.1380	.5604	.9828	.4053	.8277	.2501	.6725	.0949	.5173	.9398	.3622	.7846	.2070
422420	10.1381	10.5605	10.9829	11.4053	11.8278	12.2502	12.6726	13.0950	13.5174	13.9399	14.3623	14.7847	15.2071
423	.1382	.5606	.9830	.4054	.8278	.2503	.6727	.0951	.5175	.9400	.3624	.7848	.2072
426	.1382	.5607	.9831	.4055	.8279	.2504	.6728	.0952	.5176	.9401	.3625	.7849	.2073
429	.1383	.5607	.9832	.4056	.8280	.2504	.6729	.0953	.5177	.9402	.3626	.7850	.2074
432	.1384	.5608	.9832	.4057	.8281	.2505	.6730	.0954	.5178	.9403	.3627	.7851	.2076
422435	10.1384	10.5609	10.9833	11.4057	11.8282	12.2506	12.6731	13.0955	13.5179	13.9404	14.3628	14.7852	15.2077
438	.1385	.5610	.9834	.4058	.8283	.2507	.6731	.0956	.5180	.9405	.3629	.7853	.2078
441	.1386	.5610	.9835	.4059	.8283	.2508	.6732	.0957	.5181	.9406	.3620	.7854	.2079
444	.1387	.5611	.9835	.4060	.8284	.2509	.6733	.0958	.5182	.9407	.3631	.7855	.2080
447	.1387	.5612	.9836	.4061	.8285	.2510	.6734	.0959	.5183	.9408	.3632	.7856	.2081
422450	10.1388	10.5613	10.9837	11.4062	11.8286	12.2511	12.6735	13.0960	13.5184	13.9409	14.3633	14.7858	15.2082
453	.1389	.5613	.9838	.4062	.8287	.2511	.6736	.0960	.5185	.9409	.3634	.7859	.2083
456	.1389	.5614	.9839	.4063	.8288	.2512	.6737	.0961	.5186	.9410	.3635	.7860	.2084
459	.1390	.5615	.9839	.4064	.8289	.2513	.6738	.0962	.5187	.9411	.3636	.7861	.2085
462	.1391	.5616	.9840	.4065	.8289	.2514	.6739	.0963	.5188	.9412	.3637	.7862	.2086
422465	10.1392	10.5616	10.9841	11.4066	11.8290	12.2515	12.6740	13.0964	13.5189	13.9413	14.3638	14.7863	15.2087
468	.1392	.5617	.9842	.4066	.8291	.2516	.6740	.0965	.5190	.9414	.3639	.7864	.2088
471	.1393	.5618	.9842	.4067	.8292	.2517	.6741	.0966	.5191	.8415	.3640	.7865	.2090
474	.1394	.5619	.9843	.4068	.8293	.2517	.6742	.0967	.5192	.9416	.3641	.7866	.2091
477	.1394	.5619	.9844	.4069	.8294	.2518	.6743	.0968	.5193	.9417	.3642	.7867	.2092
422480	10.1395	10.5620	10.9845	11.4070	11.8294	12.2519	12.6744	13.0969	13.5194	13.9418	14.3643	14.7868	15.2093
483	.1396	.5621	.9846	.4070	.8295	.2520	.6745	.0970	.5195	.9419	.3644	.7869	.2094
486	.1397	.5622	.9846	.4071	.8296	.2521	.6746	.0971	.5196	.9420	.3645	.7870	.2095
489	.1397	.5622	.9847	.4072	.8297	.2522	.6747	.0972	.5196	.9421	.3646	.7871	.2096
492	.1398	.5623	.9848	.4073	.8298	.2523	.6748	.0973	.5197	.9422	.3647	.7872	.2097
422495	10.1399	10.5624	10.9849	11.4074	11.8299	12.2524	12.6749	13.0973	13.5198	13.9423	14.3648	14.7873	15.2098
498	.1400	.5625	.9849	.4074	.8299	.2524	.6749	.0974	.5199	.9424	.3649	.7874	.2099
501	.1400	.5625	.9850	.4075	.8300	.2525	.6750	.0975	.5200	.9425	.3650	.7875	.2100
504	.1401	.5626	.9851	.4076	.8301	.2526	.6751	.0976	.5201	.9426	.3651	.7876	.2101
507	.1402	.5627	.9852	.4077	.8302	.2527	.6752	.0977	.5202	.9427	.3652	.7877	.2103
422510	10.1402	10.5628	10.9853	11.4078	11.8303	12.2528	12.6753	13.0978	13.5203	13.9428	14.3653	14.7879	15.2104
513	.1403	.5628	.9853	.4079	.8304	.2529	.6754	.0979	.5204	.9429	.3654	.7880	.2105
516	.1404	.5629	.9854	.4079	.8304	.2530	.6755	.0980	.5205	.9430	.3655	.7881	.2106
519	.1405	.5630	.9855	.4080	.8305	.2531	.6756	.0981	.5206	.9431	.3656	.7882	.2107
522	.1405	.5631	.9856	.4081	.8306	.2531	.6757	.0982	.5207	.9432	.3657	.7883	.2108
422525	10.1406	10.5631	10.9857	11.4082	11.8307	12.2532	12.6758	13.0983	13.5208	13.9433	14.3659	14.7884	15.2109
528	.1407	.5632	.9857	.4083	.8308	.2533	.6758	.0984	.5209	.9434	.3660	.7885	.2110
531	.1407	.5633	.9858	.4083	.8309	.2534	.6759	.0985	.5210	.9435	.3661	.7886	.2111
534	.1408	.5634	.9859	.4084	.8310	.2535	.6760	.0986	.5211	.9436	.3662	.7887	.2112
537	.1409	.5634	.9860	.4085	.8310	.2536	.6761	.0986	.5212	.8437	.3663	.7888	.2113
422540	10.1410	10.5635	10.9860	11.4086	11.8311	12.2537	12.6762	13.0987	13.5213	13.9438	14.3664	14.7889	15.2114
543	.1410	.5636	.9861	.4087	.8312	.2537	.6763	.0988	.5214	.9439	.3665	.7890	.2115
546	.1411	.5637	.9862	.4087	.8313	.2538	.6764	.0989	.5215	.9440	.3666	.7891	.2117
549	.1412	.5637	.9863	.4088	.8314	.2539	.6765	.0990	.5216	.9441	.3667	.7892	.2118
552	.1412	.5638	.9864	.4089	.8315	.2540	.6766	.0991	.5217	.9442	.3668	.7893	.2119
422555	10.1413	10.5639	10.9864	11.4090	11.8315	12.2541	12.6767	13.0992	13.5218	13.9443	14.3669	14.7894	15.2120
558	.1414	.5640	.9865	.4091	.8316	.2542	.6767	.0993	.5219	.9444	.3670	.7895	.2121
561	.1415	.5640	.9866	.4091	.8317	.2543	.6768	.0994	.5220	.9445	.3671	.7896	.2122
564	.1415	.5641	.9867	.4092	.8318	.2544	.6769	.0995	.5220	.9446	.3672	.7897	.2123
567	.1416	.5642	.9867	.4093	.8319	.2544	.6770	.0996	.5221	.9447	.3673	.7898	.2124
422570	10.1417	10.5643	10.9868	11.4094	11.8320	12.2545	12.6771	13.0997	13.5222	13.9448	14.3674	14.7900	15.2125
573	.1418	.5643	.9869	.4095	.8320	.2546	.6772	.0998	.5223	.9449	.3675	.7901	.2126
576	.1418	.5644	.9870	.4096	.8321	.2547	.6773	.0999	.5224	.9450	.3676	.7902	.2127
579	.1419	.5645	.9871	.4096	.8322	.2548	.6774	.0999	.5225	.9451	.3677	.7903	.2128
582	.1420	.5646	.9871	.4097	.8323	.2549	.6775	.1000	.5226	.9452	.3678	.7904	.2130
422585	10.1420	10.5646	10.9872	11.4098	11.8324	12.2550	12.6776	13.1001	13.5227	13.9453	14.3679	14.7905	15.2131
588	.1421	.5647	.9873	.4099	.8325	.2551	.6776	.1002	.5228	.9454	.3680	.7906	.2132
591	.1422	.5648	.9874	.4100	.8325	.2551	.6777	.1003	.5229	.9455	.3681	.7907	.2133
594	.1423	.5649	.9874	.4100	.8326	.2552	.6778	.1004	.5230	.9456	.3682	.7908	.2134
597	.1423	.5649	.9875	.4101	.8327	.2553	.6779	.1005	.5231	.9457	.3683	.7909	.2135
422600	10.1424	10.5650	10.9876	11.4102	11.8328	12.2554	12.6780	13.1006	13.5232	13.9458	14.3684	14.7910	15.2136

MEGACYCLES PER SECOND

HARMONICS

BASIC FREQ.	37	38	39	40	41	42	43	44	45	46	47	48	50
422300	15.6251	16.0474	16.4697	16.8920	17.3143	17.7366	18.1589	18.5812	19.0035	19.4258	19.8481	20.2704	21.1150
303	.6252	.0475	.4698	.8921	.3144	.7367	.1590	.5813	.0036	.4259	.8482	.2705	.1152
306	.6253	.0476	.4699	.8922	.3145	.7369	.1592	.5815	.0038	.4261	.8484	.2707	.1153
309	.6254	.0477	.4701	.8924	.3147	.7370	.1593	.5816	.0039	.4262	.8485	.2708	.1155
312	.6255	.0479	.4702	.8925	.3148	.7371	.1594	.5817	.0040	.4264	.8487	.2710	.1156
422315	15.6257	16.0480	16.4703	16.8926	17.3149	17.7372	18.1595	18.5819	19.0042	19.4265	19.8488	20.2711	21.1158
318	.6258	.0481	.4704	.8927	.3150	.7374	.1597	.5820	.0043	.4266	.8489	.2713	.1159
321	.6259	.0482	.4705	.8928	.3152	.7375	.1598	.5821	.0044	.4268	.8491	.2714	.1161
324	.6260	.0483	.4706	.8930	.3153	.7376	.1599	.5823	.0046	.4269	.8492	.2716	.1162
327	.6261	.0484	.4708	.8931	.3154	.7377	.1601	.5824	.0047	.4270	.8494	.2717	.1164
422330	15.6262	16.0485	16.4709	16.8932	17.3155	17.7379	18.1602	18.5825	19.0049	19.4272	19.8495	20.2718	21.1165
333	.6263	.0487	.4710	.8933	.3157	.7380	.1603	.5827	.0050	.4273	.8497	.2720	.1167
336	.6264	.0488	.4711	.8934	.3158	.7381	.1604	.5828	.0051	.4275	.8498	.2721	.1168
339	.6265	.0489	.4712	.8936	.3159	.7382	.1606	.5829	.0053	.4276	.8499	.2723	.1170
342	.6267	.0490	.4713	.8937	.3160	.7384	.1607	.5830	.0054	.4277	.8501	.2724	.1171
422345	15.6268	16.0491	16.4715	16.8938	17.3161	17.7385	18.1608	18.5832	19.0055	19.4279	19.8502	20.2726	21.1173
348	.6269	.0492	.4716	.8939	.3163	.7386	.1610	.5833	.0057	.4280	.8504	.2727	.1174
351	.6270	.0493	.4717	.8940	.3164	.7387	.1611	.5834	.0058	.4281	.8505	.2728	.1176
354	.6271	.0495	.4718	.8942	.3165	.7389	.1612	.5836	.0059	.4283	.8506	.2730	.1177
357	.6272	.0496	.4719	.8943	.3166	.7390	.1614	.5837	.0061	.4284	.8508	.2731	.1179
422360	15.6273	16.0497	16.4720	16.8944	17.3168	17.7391	18.1615	18.5838	19.0062	19.4286	19.8509	20.2733	21.1180
363	.6274	.0498	.4722	.8945	.3169	.7392	.1616	.5840	.0063	.4287	.8511	.2734	.1182
366	.6275	.0499	.4723	.8946	.3170	.7394	.1617	.5841	.0065	.4288	.8512	.2736	.1183
369	.6277	.0500	.4724	.8948	.3171	.7395	.1619	.5842	.0066	.4290	.8513	.2737	.1185
372	.6278	.0501	.4725	.8949	.3173	.7396	.1620	.5844	.0067	.4291	.8515	.2739	.1186
422375	15.6279	16.0503	6.4726	16.8950	17.3174	17.7398	18.1621	18.5845	19.0069	19.4293	19.8516	20.2740	21.1188
378	.6280	.0504	.4727	.8951	.3175	.7399	.1623	.5846	.0070	.4294	.8518	.2741	.1189
381	.6281	.0505	.4729	.8952	.3176	.7400	.1624	.5848	.0071	.4295	.8519	.2743	.1191
384	.6282	.0506	.4730	.8954	.3177	.7401	.1625	.5849	.0073	.4297	.8520	.2744	.1192
387	.6283	.0507	.4731	.8955	.3179	.7403	.1626	.5850	.0074	.4298	.8522	.2746	.1194
422390	15.6284	16.0508	16.4732	16.8956	17.3180	17.7404	18.1628	18.5852	19.0076	19.4299	19.8523	20.2747	21.1195
393	.6285	.0509	.4733	.8957	.3181	.7405	.1629	.5853	.0077	.4301	.8525	.2749	.1197
396	.6287	.0510	.4734	.8958	.3182	.7406	.1630	.5854	.0078	.4302	.8526	.2750	.1198
399	.6288	.0512	.4736	.8960	.3184	.7408	.1632	.5856	.0080	.4304	.8528	.2752	.1200
402	.6289	.0513	.4737	.8961	.3185	.7409	.1633	.5857	.0081	.4305	.8529	.2753	.1201
422405	15.6290	16.0514	16.4738	16.8962	17.3186	17.7410	18.1634	18.5858	19.0082	19.4306	19.8530	20.2754	21.1203
408	.6291	.0515	.4739	.8963	.3187	.7411	.1635	.5860	.0084	.4308	.8532	.2756	.1204
411	.6292	.0516	.4740	.8964	.3189	.7413	.1637	.5861	.0085	.4309	.8533	.2757	.1206
414	.6293	.0517	.4741	.8966	.3190	.7414	.1638	.5862	.0086	.4310	.8535	.2759	.1207
417	.6294	.0518	.4743	.8967	.3191	.7415	.1639	.5863	.0088	.4312	.8536	.2760	.1209
422420	15.6295	16.0520	16.4744	16.8968	17.3192	17.7416	18.1641	18.5865	19.0089	19.4313	19.8537	20.2762	21.1210
423	.6297	.0521	.4745	.8969	.3193	.7418	.1642	.5866	.0090	.4315	.8539	.2763	.1212
426	.6298	.0522	.4746	.8970	.3195	.7419	.1643	.5867	.0092	.4316	.8540	.2764	.1213
429	.6299	.0523	.4747	.8972	.3196	.7420	.1644	.5869	.0093	.4317	.8542	.2766	.1215
432	.6300	.0524	.4748	.8973	.3197	.7421	.1646	.5870	.0094	.4319	.8543	.2767	.1216
422435	15.6301	16.0525	16.4750	16.8974	17.3198	17.7423	18.1647	18.5871	19.0096	19.4320	19.8544	20.2769	21.1218
438	.6302	.0526	.4751	.8975	.3200	.7424	.1648	.5873	.0097	.4321	.8546	.2770	.1219
441	.6303	.0528	.4752	.8976	.3201	.7425	.1650	.5874	.0098	.4323	.8547	.2772	.1221
444	.6304	.0529	.4753	.8978	.3202	.7426	.1651	.5875	.0100	.4324	.8549	.2773	.1222
447	.6305	.0530	.4754	.8979	.3203	.7428	.1652	.5877	.0101	.4326	.8550	.2775	.1224
422450	15.6307	16.0531	16.4756	16.8980	17.3205	17.7429	18.1654	18.5878	19.0103	19.4327	19.8552	20.2776	21.1225
453	.6308	.0532	.4757	.8981	.3206	.7430	.1655	.5879	.0104	.4328	.8553	.2777	.1227
456	.6309	.0533	.4758	.8982	.3207	.7432	.1656	.5881	.0105	.4330	.8554	.2779	.1228
459	.6310	.0534	.4759	.8984	.3208	.7433	.1657	.5882	.0107	.4331	.8556	.2780	.1230
462	.6311	.0536	.4760	.8985	.3209	.7434	.1659	.5883	.0108	.4333	.8557	.2782	.1231
422465	15.6312	16.0537	16.4761	16.8986	17.3211	17.7435	18.1660	18.5885	19.0109	19.4334	19.8559	20.2783	21.1233
468	.6313	.0538	.4763	.8987	.3212	.7437	.1661	.5886	.0111	.4335	.8560	.2785	.1234
471	.6314	.0539	.4764	.8988	.3213	.7438	.1663	.5887	.0112	.4337	.8561	.2786	.1236
474	.6315	.0540	.4765	.8990	.3214	.7439	.1664	.5889	.0113	.4338	.8563	.2788	.1237
477	.6316	.0541	.4766	.8991	.3216	.7440	.1665	.5890	.0115	.4339	.8564	.2789	.1239
422480	15.6318	16.0542	16.4767	16.8992	17.3217	17.7442	18.1666	18.5891	19.0116	19.4341	19.8566	20.2790	21.1240
483	.6319	.0544	.4768	.8993	.3218	.7443	.1668	.5893	.0117	.4342	.8567	.2792	.1242
486	.6320	.0545	.4770	.8994	.3219	.7444	.1669	.5894	.0119	.4344	.8568	.2793	.1243
489	.6321	.0546	.4771	.8996	.3220	.7445	.1670	.5895	.0120	.4345	.8570	.2795	.1245
492	.6322	.0547	.4772	.8997	.3222	.7447	.1672	.5896	.0121	.4346	.8571	.2796	.1246
422495	15.6323	16.0548	16.4773	16.8998	17.3223	17.7448	18.1673	18.5898	19.0123	19.4348	19.8573	20.2798	21.1248
498	.6324	.0549	.4774	.8999	.3224	.7449	.1674	.5899	.0124	.4349	.8574	.2799	.1249
501	.6325	.0550	.4775	.9000	.3225	.7450	.1675	.5900	.0125	.4350	.8575	.2800	.1251
504	.6326	.0552	.4777	.9002	.3227	.7452	.1677	.5902	.0127	.4352	.8577	.2802	.1252
507	.6328	.0553	.4778	.9003	.3228	.7453	.1678	.5903	.0128	.4353	.8578	.2803	.1254
422510	15.6329	16.0554	16.4779	16.9004	17.3229	17.7454	18.1697	18.5904	19.0130	19.4355	19.8580	20.2805	21.1255
513	.6330	.0555	.4780	.9005	.3230	.7455	.1681	.5906	.0131	.4356	.8581	.2806	.1257
516	.6331	.0556	.4781	.9006	.3232	.7457	.1682	.5907	.0132	.4357	.8583	.2808	.1258
519	.6332	.0557	.4782	.9008	.3233	.7458	.1683	.5908	.0134	.4359	.8584	.2809	.1260
522	.6333	.0558	.4784	.9009	.3234	.7459	.1684	.5910	.0135	.4360	.8585	.2811	.1261
422525	15.6334	16.0560	16.4785	16.9010	17.3235	17.7461	18.1686	18.5911	19.0136	19.4362	19.8587	20.2812	21.1263
528	.6335	.0561	.4786	.9011	.3236	.7462	.1687	.5912	.0138	.4363	.8588	.2813	.1264
531	.6336	.0562	.4787	.9012	.3238	.7463	.1688	.5914	.0139	.4364	.8590	.2815	.1266
534	.6338	.0563	.4788	.9014	.3239	.7464	.1690	.5915	.0140	.4366	.8591	.2816	.1267
537	.6339	.0564	.4789	.9015	.3240	.7466	.1691	.5916	.0142	.4367	.8592	.2818	.1269
422540	15.6340	16.0565	16.4791	16.9016	17.3241	17.7467	18.1692	18.5918	19.0143	19.4368	19.8594	20.2819	21.1270
543	.6341	.0566	.4792	.9017	.3243	.7468	.1693	.5919	.0144	.4370	.8595	.2821	.1272
546	.6342	.0567	.4793	.9018	.3244	.7469	.1695	.5920	.0146	.4371	.8597	.2822	.1273
549	.6343	.0569	.4794	.9020	.3245	.7471	.1696	.5922	.0147	.4373	.8598	.2824	.1275
552	.6344	.0570	.4795	.9021	.3246	.7472	.1697	.5923	.0148	.4374	.8599	.2825	.1276
422555	15.6345	16.0571	16.4796	16.9022	17.3248	17.7473	18.1699	18.5924	19.0150	19.4375	19.8601	20.2826	21.1278
558	.6346	.0572	.4798	.9023	.3249	.7474	.1700	.5926	.0151	.4377	.8602	.2828	.1279
561	.6348	.0573	.4799	.9024	.3250	.7476	.1701	.5927	.0152	.4378	.8604	.2829	.1281
564	.6349	.0574	.4800	.9026	.3251	.7477	.1703	.5928	.0154	.4379	.8605	.2831	.1282
567	.6350	.0575	.4801	.9027	.3252	.7478	.1704	.5929	.0155	.4381	.8606	.2832	.1284
422570	15.6351	16.0577	16.4802	16.9028	17.3254	17.7479	18.1705	18.5931	19.0157	19.4382	19.8608	20.2834	21.1285
573	.6352	.0578	.4803	.9029	.3255	.7481	.1706	.5932	.0158	.4384	.8609	.2835	.1287
576	.6353	.0579	.4805	.9030	.3256	.7482	.1708	.5933	.0159	.4385	.8611	.2836	.1288
579	.6354	.0580	.4806	.9032	.3257	.7483	.1709	.5935	.0161	.4386	.8612	.2838	.1290
582	.6355	.0581	.4807	.9033	.3259	.7484	.1710	.5936	.0162	.4388	.8614	.2839	.1291
422585	15.6356	16.0582	16.4808	16.9034	17.3260	17.7486	18.1712	18.5937	19.0163	19.4389	19.8615	20.2841	21.1293
588	.6358	.0583	.4809	.9035	.3261	.7487	.1713	.5939	.0165	.4390	.8616	.2842	.1294
591	.6359	.0585	.4810	.9036	.3262	.7488	.1714	.5940	.0166	.4392	.8618	.2844	.1296
594	.6360	.0586	.4812	.9038	.3264	.7489	.1715	.5941	.0167	.4393	.8619	.2845	.1297
597	.6361	.0587	.4813	.9039	.3265	.7491	.1717	.5943	.0169	.4395	.8621	.2847	.1299
422600	15.6362	16.0588	16.4814	16.9040	17.3266	17.7492	18.1718	18.5944	19.0170	19.4396	19.8622	20.2848	21.1300

MEGACYCLES PER SECOND

H A R M O N I C S

BASIC FREQ.	24	25	26	27	28	29	30	31	32	33	34	35	36
422600	10.1424	10.5650	10.9876	11.4102	11.8328	12.2554	12.6780	13.1006	13.5232	13.9458	14.3684	14.7910	15.2136
603	.1425	.5651	.9877	.4103	.8329	.2555	.6781	.1007	.5233	.9459	.3685	.7911	.2137
606	.1425	.5652	.9878	.4104	.8330	.2556	.6782	.1008	.5234	.9460	.3686	.7912	.2138
609	.1426	.5652	.9878	.4104	.8331	.2557	.6783	.1009	.5235	.9461	.3687	.7913	.2139
612	.1427	.5653	.9879	.4105	.8331	.2557	.6784	.1010	.5236	.9462	.3688	.7914	.2140
422615	10.1428	10.5654	10.9880	11.4106	11.8332	12.2558	12.6785	13.1011	13.5237	13.9463	14.3689	14.7915	15.2141
618	.1428	.5655	.9881	.4107	.8333	.2559	.6785	.1012	.5238	.9464	.3690	.7916	.2142
621	.1429	.5655	.9881	.4108	.8334	.2560	.6786	.1013	.5239	.9465	.3691	.7917	.2144
624	.1430	.5656	.9882	.4108	.8335	.2561	.6787	.1013	.5240	.9466	.3692	.7918	.2145
627	.1430	.5657	.9883	.4109	.8336	.2562	.6788	.1014	.5241	.9467	.3693	.7919	.2146
422630	10.1431	10.5658	10.9884	11.4110	11.8336	12.2563	12.6789	13.1015	13.5242	13.9468	14.3694	14.7921	15.2147
633	.1432	.5658	.9885	.4111	.8337	.2564	.6790	.1016	.5243	.9469	.3695	.7922	.2148
636	.1433	.5659	.8985	.4112	.8338	.2564	.6791	.1017	.5244	.9470	.3696	.7923	.2149
639	.1433	.5660	.9886	.4113	.8339	.2565	.6792	.1018	.5244	.9471	.3697	.7924	.2150
642	.1434	.5661	.9887	.4113	.8340	.2566	.6793	.1019	.5245	.9472	.3698	.7925	.2151
422645	10.1435	10.5661	10.9888	11.4114	11.8341	12.2567	12.6794	13.1020	13.5246	13.9473	14.3699	14.7926	15.2152
648	.1436	.5662	.9888	.4115	.8341	.2568	.6794	.1021	.5247	.9474	.3700	.3627	.2153
651	.1436	.5663	.9889	.4116	.8342	.2569	.6795	.1022	.5248	.9475	.3701	.7928	.2154
654	.1437	.5664	.9890	.4117	.8343	.2570	.6796	.1023	.5259	.9476	.3702	.7929	.2155
657	.1438	.5664	.9891	.4117	.8344	.2571	.6797	.1024	.5250	.9477	.3703	.7930	.2157
422660	10.1438	10.5665	10.9892	11.4118	11.8345	12.2571	12.6798	13.1025	13.5251	13.9478	14.3704	14.7931	15.2158
663	.1439	.5666	.9892	.4119	.8346	.2572	.6799	.1026	.5252	.9479	.3705	.7932	.2159
666	.1440	.5667	.9893	.4120	.8346	.2573	.6800	.1026	.5253	.9480	.3706	.7933	.2160
669	.1441	.5667	.9894	.4121	.8347	.2574	.6801	.1027	.5254	.9481	.3707	.7934	.2161
672	.1441	.5668	.9895	.4121	.8348	.2575	.6802	.1028	.5255	.9482	.3708	.7935	.2162
422675	10.1442	10.5669	10.9896	11.4122	11.8349	12.2576	12.6803	13.1029	13.5256	13.9483	14.3710	14.7936	15.2163
678	.1443	.5670	.9896	.4123	.8350	.2577	.6803	.1030	.5257	.9484	.3711	.7937	.2164
681	.1443	.5670	.9897	.4124	.8351	.2577	.6804	.1031	.5258	.9485	.3712	.7938	.2165
684	.1444	.5671	.9898	.4125	.8352	.2578	.6805	.1032	.5259	.9486	.3713	.7939	.2166
687	.1445	.5672	.9899	.4125	.8352	.2579	.6806	.1033	.5260	.9487	.3714	.7940	.2167
422690	10.1446	10.5673	10.9899	11.4126	11.8353	12.2580	12.6807	13.1034	13.5261	13.9488	14.3715	14.7942	15.2168
693	.1446	.5673	.9900	.4127	.8354	.2581	.6808	.1035	.5262	.9489	.3716	.7943	.2169
696	.1447	.5674	.9901	.4128	.8355	.2582	.6809	.1036	.5263	.9490	.3717	.7944	.2171
699	.1448	.5675	.9902	.4129	.8356	.2583	.6810	.1037	.5264	.9491	.3718	.7945	.2172
702	.1448	.5676	.9903	.4130	.8357	.2584	.6811	.1038	.5265	.9492	.3719	.7946	.2173
422705	10.1449	10.5676	10.9903	11.4130	11.8357	12.2584	12.6812	13.1039	13.5266	13.9493	14.3720	14.7947	15.2174
708	.1450	.5677	.9904	.4131	.8358	.2585	.6812	.1039	.5267	.9494	.3721	.7948	.2175
711	.1451	.5678	.9905	.4132	.8359	.2586	.6813	.1040	.5268	.9495	.2722	.7949	.2176
714	.1451	.5679	.9906	.4133	.8360	.2587	.6814	.1041	.5268	.9496	.3723	.7950	.2177
717	.1452	.5679	.9906	.4134	.8361	.2588	.6815	.1042	.5269	.9497	.3724	.7951	.2178
422720	10.1453	10.5680	10.9907	11.4134	11.8362	12.2589	12.6816	13.1043	13.5270	13.9498	14.3725	14.7952	15.2179
723	.1454	.5681	.9908	.4135	.8362	.2590	.6817	.1044	.5271	.9499	.3726	.7953	.2180
726	.1454	.5682	.9909	.4136	.8363	.2591	.6818	.1045	.5272	.9500	.3727	.7954	.2181
729	.1455	.5682	.9910	.4137	.8364	.2591	.6819	.1046	.5273	.9501	.3728	.7955	.2182
732	.1456	.5683	.9910	.4138	.8365	.2592	.6820	.1047	.5274	.9502	.3729	.7956	.2184
422735	10.1456	10.5684	10.9911	11.4138	11.8366	12.2593	12.6821	13.1048	13.5275	13.9503	14.3730	14.7957	15.2185
738	.1457	.5685	.9912	.4139	.8367	.2594	.6821	.1049	.5276	.9504	.3731	.7958	.2186
741	.1458	.5685	.9913	.4140	.8367	.2595	.6822	.1050	.5277	.9505	.3732	.7959	.2187
744	.1459	.5686	.9913	.4141	.8368	.2596	.6823	.1051	.5278	.9506	.3733	.7960	.2188
747	.1459	.5687	.9914	.4142	.8369	.2597	.6824	.1052	.5279	.9507	.3734	.7961	.2189
422750	10.1460	10.5688	10.9915	11.4143	11.8370	12.2598	12.6825	13.1053	13.5280	13.9508	14.3735	14.7963	15.2190
753	.1461	.5688	.9916	.4143	.8371	.2598	.6826	.1053	.5281	.9508	.3736	.7964	.2191
756	.1461	.5689	.9917	.4144	.8372	.2599	.6827	.1054	.5282	.9509	.3737	.7965	.2192
759	.1462	.5690	.9917	.4145	.8373	.2600	.6828	.1055	.5283	.9510	.3738	.7966	.2193
762	.1463	.5691	.9918	.4146	.8373	.2601	.6829	.1056	.5284	.9511	.3739	.7967	.2194
422765	10.1464	10.5691	10.9919	11.4147	11.8374	12.2602	12.6830	13.1057	13.5285	13.9512	14.3740	14.7968	15.2195
768	.1464	.5692	.9920	.4147	.8375	.2603	.6830	.1058	.5286	.9513	.3741	.7969	.2196
771	.1465	.5693	.9920	.4148	.8376	.2604	.6831	.1059	.5287	.9514	.3742	.7970	.2198
774	.1466	.5694	.9921	.4149	.8377	.2604	.6832	.1060	.5288	.9515	.3743	.7971	.2199
777	.1466	.5694	.9922	.4150	.8378	.2605	.6833	.1061	.5289	.9516	.3744	.7972	.2200
422780	10.1467	10.5695	10.9923	11.4151	11.8378	12.2606	12.6834	13.1062	13.5290	13.9517	14.3745	14.7973	15.2201
783	.1468	.5696	.9924	.4151	.8379	.2607	.6835	.1063	.5291	.9518	.3746	.7974	.2202
786	.1469	.5697	.9924	.4152	.8380	.2608	.6836	.1064	.5292	.9519	.3747	.7975	.2203
789	.1469	.5697	.9925	.4153	.8381	.2609	.6837	.1065	.5292	.9520	.2748	.7976	.2204
792	.1470	.5698	.9926	.4154	.8382	.2610	.6838	.1066	.5293	.9521	.3749	.7977	.2205
422795	10.1471	10.5699	10.9927	11.4155	11.8383	12.2611	12.6839	13.1066	13.5294	13.9522	14.3750	14.7978	15.2206
798	.1472	.5700	.9927	.4155	.8383	.2611	.6839	.1067	.5295	.9523	.3751	.7979	.2207
801	.1472	.5700	.9928	.4156	.8384	.2612	.6840	.1068	.5296	.9524	.3752	.7980	.2208
804	.1473	.5701	.9929	.4157	.8385	.2613	.6841	.1069	.5297	.9525	.3753	.7981	.2209
807	.1474	.5702	.9930	.4158	.8386	.2614	.6842	.1070	.5298	.9526	.3754	.7982	.2211
422810	10.1474	10.5703	10.9931	11.4159	11.8387	12.2615	12.6843	13.1071	13.5299	13.9527	14.3755	14.7984	15.2212
813	.1475	.5703	.9931	.4160	.8388	.2616	.6844	.1072	.5300	.9528	.3756	.7985	.2213
816	.1476	.5704	.9932	.4160	.8388	.2617	.6845	.1073	.5301	.9529	.3757	.7986	.2214
819	.1477	.5705	.9933	.4161	.8389	.2618	.6846	.1074	.5302	.9530	.3758	.7987	.2215
822	.1477	.5706	.9934	.4162	.8390	.6618	.6847	.1075	.5303	.9531	.3759	.7988	.2216
422825	10.1478	10.5706	10.9935	11.4163	11.8391	12.2619	12.6848	13.1076	13.5304	13.9532	14.3761	14.7989	15.2217
828	.1479	.5707	.9935	.4164	.8392	.2620	.6848	.1077	.5305	.9533	.3762	.7990	.2218
831	.1479	.5708	.9936	.4164	.8393	.2621	.6849	.1078	.5306	.9534	.3763	.7991	.2219
834	.1480	.5709	.9937	.4165	.8394	.2622	.6850	.1079	.5307	.9535	.3764	.7992	.2220
837	.1481	.5709	.9938	.4166	.8394	.2623	.6851	.1079	.5308	.9536	.3765	.7993	.2221
422840	10.1482	10.5710	10.9938	11.4167	11.8395	12.2624	12.6852	13.1080	13.5309	13.9537	14.3766	14.7994	15.2222
843	.1482	.5711	.9939	.4168	.8396	.2624	.6853	.1081	.5310	.9538	.3767	.7995	.2223
846	.1483	.5712	.9940	.4168	.8397	.2625	.6854	.1082	.5311	.9539	.3768	.7996	.2225
849	.1484	.5713	.9941	.4169	.8398	.2626	.6855	.1083	.5312	.9540	.3769	.7997	.2226
852	.1484	.5713	.9942	.4170	.8399	.2627	.6856	.1084	.5313	.9541	.3770	.7998	.2227
422855	10.1485	10.5714	10.9942	11.4171	11.8399	12.2628	12.6857	13.1085	13.5314	13.9542	14.3771	14.7999	15.2228
858	.1486	.5715	.9943	.4172	.8400	.2629	.6857	.1086	.5315	.9543	.3772	.8000	.2229
861	.1487	.5715	.9944	.4172	.8401	.2630	.6858	.1087	.5316	.9544	.3773	.8001	.2230
864	.1487	.5716	.9945	.4173	.8402	.2631	.6859	.1088	.5316	.9545	.3774	.8002	.2231
867	.1488	.5717	.9945	.4174	.8403	.2631	.6860	.1089	.5317	.9546	.3775	.8003	.2232
422870	10.1489	10.5718	10.9946	11.4175	11.8404	12.2632	12.6861	13.1090	13.5318	13.9547	14.3776	14.8005	15.2233
873	.1490	.5718	.9947	.4176	.8404	.2633	.6862	.1091	.5319	.9548	.3777	.8006	.2234
876	.1490	.5719	.9948	.4177	.8405	.2634	.6863	.1092	.5320	.9549	.3778	.8007	.2235
879	.1491	.5720	.9949	.4177	.8406	.2635	.6864	.1092	.5321	.9550	.3779	.8008	.2236
882	.1492	.5721	.9949	.4178	.8407	.2636	.6865	.1093	.5322	.9551	.3780	.8009	.2238
422885	10 1492	10.5721	10.9950	11.4179	11.8408	12.2637	12.6866	13.1094	13.5323	13.9552	14.3781	14.8010	15.2239
888	.1493	.5722	.9951	.4180	.8409	.2638	.6866	.1095	.5324	.9553	.3782	.8011	.2240
891	.1494	.5723	.9952	.4181	.8409	.2638	.6867	.1096	.5325	.9554	.3783	.8012	.2241
894	.1495	.5724	.9952	.4181	.8410	.2639	.6868	.1097	.5326	.9555	.3784	.8013	.2242
897	.1495	.5724	.9953	.4182	.8411	.2640	.6869	.1098	.5327	.9556	.3785	.8014	.2243
422900	10.1496	10.5725	10.9954	11.4183	11.8412	12.2641	12.6870	13.1099	13.5328	13.9557	14.3786	14.8015	15.2244

MEGACYCLES PER SECOND

HARMONICS

BASIC FREQ.	37	38	39	40	41	42	43	44	45	46	47	48	50
422600	15.6362	16.0588	16.4814	16.9040	17.3266	17.7492	18.1718	18.5944	19.0170	19.4396	19.8622	20.2848	21.1300
603	.6363	.0589	.4815	.9041	.3267	.7493	.1719	.5945	.0171	.4397	.8623	.2849	.1302
606	.6364	.0590	.4816	.9042	.3268	.7495	.1721	.5947	.0173	.4399	.8625	.2851	.1303
609	.6365	.0591	.4818	.9044	.3270	.7496	.1722	.5948	.0174	.4400	.8626	.2852	.1305
612	.6366	.0593	.4819	.9045	.3271	.7497	.1723	.5949	.0175	.4402	.8628	.2854	.1306
422615	15.6368	16.0594	16.4820	16.9046	17.3272	17.7498	18.1724	18.5951	19.0177	19.4403	19.8629	20.2855	21.1308
618	.6369	.0595	.4821	.9047	.3273	.7500	.1726	.5952	.0178	.4404	.8630	.2857	.1309
621	.6370	.0596	.4822	.9048	.3275	.7501	.1727	.5953	.0179	.4406	.8632	.2858	.1311
624	.6371	.0597	.4823	.9050	.3276	.7502	.1728	.5955	.0181	.4407	.8633	.2860	.1312
627	.6372	.0598	.4825	.9051	.3277	.7503	.1730	.5956	.0182	.4408	.8635	.2861	.1314
422630	15.6373	16.0599	16.4826	16.9052	17.3278	17.7505	18.1731	18.5957	19.0184	19.4410	19.8636	20.2862	21.1315
633	.6374	.0601	.4827	.9053	.3280	.7506	.1732	.5959	.0185	.4411	.8638	.2864	.1317
636	.6375	.0602	.4828	.9054	.3281	.7507	.1733	.5960	.0186	.4413	.8639	.2865	.1318
639	.6376	.0603	.4829	.9056	.3282	.7508	.1735	.5961	.0188	.4414	.8640	.2867	.1320
642	.6378	.0604	.4830	.9057	.3283	.7510	.1736	.5962	.0189	.4415	.8642	.2868	.1321
422645	15.6379	16.0605	16.4832	16.9058	17.3284	17.7511	18.1737	18.5964	19.0190	19.4417	19.8643	20.2870	21.1323
648	.6380	.0606	.4833	.9059	.3286	.7512	.1739	.5965	.0192	.4418	.8645	.2871	.1324
651	.6381	.0607	.4834	.9060	.3287	.7513	.1740	.5966	.0193	.4419	.8646	.2872	.1326
654	.6382	.0609	.4835	.9062	.3288	.7515	.1741	.5968	.0194	.4421	.8647	.2874	.1327
657	.6383	.0610	.4836	.9063	.3289	.7516	.1743	.5969	.0196	.4422	.8649	.2875	.1329
422660	15.6384	16.0611	16.4837	16.9064	17.3291	17.7517	18.1744	18.5970	19.0197	19.4424	19.8650	20.2877	21.1330
663	.6385	.0612	.4839	.9065	.3292	.7518	.1745	.5972	.0198	.4425	.8652	.2878	.1332
666	.6386	.0613	.4840	.9066	.3293	.7520	.1746	.5973	.0200	.4426	.8653	.2880	.1333
669	.6388	.0614	.4841	.9068	.3294	.7521	.1748	.5974	.0201	.4428	.8654	.2881	.1335
672	.6389	.0615	.4842	.9069	.3296	.7522	.1749	.5976	.0202	.4429	.8656	.2883	.1336
422675	15.6390	16.0617	16.4843	16.9070	17.3297	17.7524	18.1750	18.5977	19.0204	19.4431	19.8657	20.2884	21.1338
678	.6391	.0618	.4844	.9071	.3298	.7525	.1752	.5978	.0205	.4432	.8659	.2885	.1339
681	.6392	.0619	.4846	.9072	.3299	.7526	.1753	.5980	.0206	.4433	.8660	.2887	.1341
684	.6393	.0620	.4847	.9074	.3300	.7527	.1754	.5981	.0208	.4435	.8661	.2888	.1342
687	.6394	.0621	.4848	.9075	.3302	.7529	.1755	.5982	.0209	.4436	.8663	.2890	.1344
422690	15.6395	16.0622	16.4849	16.9076	17.3303	17.7530	18.1757	18.5984	19.0211	19.4437	19.8664	20.2891	21.1345
693	.6396	.0623	.4850	.9077	.3304	.7531	.1758	.5985	.0212	.4439	.8666	.2893	.1347
696	.6398	.0624	.4851	.9078	.3305	.7532	.1759	.5986	.0213	.4440	.8667	.2894	.1348
699	.6399	.0626	.4853	.9080	.3307	.7534	.1761	.5988	.0215	.4442	.8669	.2896	.1350
702	.6400	.0627	.4854	.9081	.3308	.7535	.1762	.5989	.0216	.4443	.8670	.2897	.1351
422705	15.6401	16.0628	16.4855	16.9082	17.3309	17.7536	18.1763	18.5990	19.0217	19.4444	19.8671	20.2898	21.1353
708	.6402	.0629	.4856	.9083	.3310	.7537	.1764	.5992	.0219	.4446	.8673	.2900	.1354
711	.6403	.0630	.4857	.9084	.3312	.7539	.1766	.5993	.0220	.4447	.8674	.2901	.1356
714	.6404	.0631	.4858	.9086	.3313	.7540	.1767	.5994	.0221	.4448	.8676	.2903	.1357
717	.6405	.0632	.4860	.9087	.3314	.7541	.1768	.5995	.0223	.4450	.8677	.2904	.1359
422720	15.6406	16.0634	16.4861	16.9088	17.3315	17.7542	18.1770	18.5997	19.0224	19.4451	19.8678	20.2906	21.1360
723	.6408	.0635	.4862	.9089	.3316	.7544	.1771	.5998	.0225	.4453	.8680	.2907	.1362
726	.6409	.0636	.4863	.9090	.3318	.7545	.1772	.5999	.0227	.4454	.8681	.2908	.1363
729	.6410	.0637	.4864	.9092	.3319	.7546	.1773	.6001	.0228	.4455	.8683	.2910	.1365
732	.6411	.0638	.4865	.9093	.3320	.7547	.1775	.6002	.0229	.4457	.8684	.2911	.1366
422735	15.6412	16.0639	16.4867	16.9094	17.3321	17.7549	18.1776	18.6003	19.0231	19.4458	19.8685	20.2913	21.1368
738	.6413	.0640	.4868	.9095	.3323	.7550	.1777	.6005	.0232	.4459	.8687	.2914	.1369
741	.6414	.0642	.4869	.9096	.3324	.7551	.1779	.6006	.0233	.4461	.8688	.2916	.1371
744	.6415	.0643	.4870	.9098	.3325	.7552	.1780	.6007	.0235	.4462	.8690	.2917	.1372
747	.6416	.0644	.4871	.9099	.3326	.7554	.1781	.6009	.0236	.4464	.8691	.2919	.1374
422750	15.6418	16.0645	16.4873	16.9100	17.3328	17.7555	18.1783	18.6010	19.0238	19.4465	19.8693	20.2920	21.1375
753	.6419	.0646	.4874	.9101	.3329	.7556	.1784	.6011	.0239	.4466	.8694	.2921	.1377
756	.6420	.0647	.4875	.9102	.3330	.7558	.1785	.6013	.0240	.4468	.8695	.2923	.1378
759	.6421	.0648	.4876	.9104	.3331	.7559	.1786	.6014	.0242	.4469	.8697	.2924	.1380
762	.6422	.0650	.4877	.9105	.3332	.7560	.1788	.6015	.0243	.4471	.8698	.2926	.1381
422765	15.6423	16.0651	16.4878	16.9106	17.3334	17.7561	18.1789	18.6017	19.0244	19.4472	19.8700	20.2927	21.1383
768	.6424	.0652	.4880	.9107	.3335	.7563	.1790	.6018	.0246	.4473	.8701	.2929	.1384
771	.6425	.0653	.4881	.9108	.3336	.7564	.1792	.6019	.0247	.4475	.8702	.2930	.1386
774	.6526	.0654	.4882	.9110	.3337	.7565	.1793	.6021	.0248	.4476	.8704	.2932	.1387
777	.6427	.0655	.4883	.9111	.3339	.7566	.1794	.6022	.0250	.4477	.8705	.2933	.1389
422780	15.6429	16.0656	16.4884	16.9112	17.3340	17.7568	18.1795	18.6023	19.0251	19.4479	19.8707	20.2934	21.1390
783	.6430	.0658	.4885	.9113	.3341	.7569	.1797	.6025	.0252	.4480	.8708	.2936	.1392
786	.6431	.0659	.4887	.9114	.3342	.7570	.1798	.6026	.0254	.4482	.8709	.2937	.1393
789	.6432	.0660	.4888	.9116	.3343	.7571	.1799	.6027	.0255	.4483	.8711	.2939	.1395
792	.6433	.0661	.4889	.9117	.3345	.7573	.1801	.6028	.0256	.4484	.8712	.2940	.1396
422795	15.6434	16.0662	16.4890	16.9118	17.3346	17.7574	18.1802	18.6030	19.0258	19.4486	19.8714	20.2942	21.1398
798	.6435	.0663	.4891	.9119	.3347	.7575	.1803	.6031	.0259	.4487	.8715	.2943	.1399
801	.6436	.0664	.4892	.9120	.3348	.7576	.1804	.6032	.0260	.4488	.8716	.2944	.1401
804	.6437	.0666	.4894	.9122	.3350	.7578	.1806	.6034	.0262	.4490	.8718	.2946	.1402
807	.6439	.0667	.4895	.9123	.3351	.7579	.1807	.6035	.0263	.4491	.8719	.2947	.1404
422810	15.6440	16.0668	16.4896	16.9124	17.3352	17.7580	18.1808	18.6036	19.0265	19.4493	19.8721	20.2949	21.1405
813	.6441	.0669	.4897	.9125	.3353	.7581	.1810	.6038	.0266	.4494	.8722	.2950	.1407
816	.6442	.0670	.4898	.9126	.3355	.7583	.1811	.6039	.0267	.4495	.8724	.2952	.1408
819	.6443	.0671	.4899	.9128	.3356	.7584	.1812	.6040	.0269	.4497	.8725	.2953	.1410
822	.6444	.0672	.4901	.9129	.3357	.7585	.1813	.6042	.0270	.4498	.8726	.2955	.1411
422825	15.6445	16.0674	16.4902	16.9130	17.3358	17.7587	18.1815	18.6043	19.0271	19.4500	19.8728	20.2956	21.1413
828	.6446	.0675	.4903	.9131	.3359	.7588	.1816	.6044	.0273	.4501	.8729	.2957	.1414
831	.6447	.0676	.4904	.9132	.3361	.7589	.1817	.6046	.0274	.4502	.8731	.2959	.1416
834	.6449	.0677	.4905	.9134	.3362	.7590	.1819	.6047	.0275	.4504	.8732	.2960	.1417
837	.6450	.0678	.4906	.9135	.3363	.7592	.1820	.6048	.0277	.4505	.8733	.2962	.1419
422840	15.6451	16.0679	16.4908	16.9136	17.3364	17.7593	18.1821	18.6050	19.0278	19.4506	19.8735	20.2963	21.1420
843	.6452	.0680	.4909	.9137	.3366	.7594	.1822	.6051	.0279	.4508	.8736	.2965	.1422
846	.6453	.0681	.4910	.9138	.3367	.7595	.1824	.6052	.0281	.4509	.8738	.2966	.1423
849	.6454	.0683	.4911	.9140	.3368	.7597	.1825	.6054	.0282	.4511	.8739	.2968	.1425
852	.6455	.0684	.4912	.9141	.3369	.7598	.1826	.6055	.0283	.4512	.8740	.2969	.1426
422855	15.6456	16.0685	16.4913	16.9142	17.3371	17.7599	18.1828	18.6056	19.0285	19.4513	19.8742	20.2970	21.1428
858	.6457	.0686	.4915	.9143	.3372	.7600	.1829	.6058	.0286	.4515	.8743	.2972	.1429
861	.6459	.0687	.4916	.9144	.3373	.7602	.1830	.6059	.0287	.4516	.8745	.2973	.1431
864	.6460	.0688	.4917	.9146	.3374	.7603	.1832	.6060	.0289	.4517	.8746	.2975	.1432
867	.6461	.0689	.4918	.9147	.3375	.7604	.1833	.6061	.0290	.4519	.8747	.2976	.1434
422870	15.6462	16.0691	16.4919	16.9148	17.3377	17.7605	18.1834	18.6063	19.0292	19.4520	19.8749	20.2978	21.1435
873	.6463	.0692	.4920	.9149	.3378	.7607	.1835	.6064	.0293	.4522	.8750	.2979	.1437
876	.6464	.0693	.4922	.9150	.3379	.7608	.1837	.6065	.0294	.4523	.8752	.2980	.1438
879	.6465	.0694	.4923	.9152	.3380	.7609	.1838	.6067	.0296	.4524	.8753	.2982	.1440
882	.6466	.0695	.4924	.9153	.3382	.7610	.1839	.6068	.0297	.4526	.8755	.2983	.1441
422885	15.6467	16.0696	16.4925	16.9154	17.3383	17.7612	18.1841	18.6069	19.0298	19.4527	19.8756	20.2985	21.1443
888	.6469	.0697	.4926	.9155	.3384	.7613	.1842	.6071	.0300	.4528	.8757	.2986	.1444
891	.6470	.0699	.4927	.9156	.3385	.7614	.1843	.6072	.0301	.4530	.8759	.2988	:1446
894	.6471	.0700	.4929	.9158	.3387	.7615	.1844	.6073	.0302	.4531	.8760	.2989	.1447
897	.6472	.0701	.4930	.9159	.3388	.7617	.1846	.6075	.0304	.4533	.8762	.2991	.1449
422900	15.6473	16.0702	16.4931	16.9160	17.338	17.7618	18.1847	18.6076	19.0305	19.4534	19.8763	20.2992	21.1450

R

MEGACYCLES PER SECOND

H A R M O N I C S

BASIC FREQ.	24	25	26	27	28	29	30	31	32	33	34	35	36
422900	10.1496	10.5725	10.9954	11.4183	11.8412	12.2641	12.6870	13.1099	13.5328	13.9557	14.3786	14.8015	15.2244
903	.1497	.5726	.9955	.4184	.8413	.2642	.6871	.1100	.5329	.9558	.3787	.8016	.2245
906	.1497	.5727	.9956	.4185	.8414	.2643	.6872	.1101	.5330	.9559	.3788	.8017	.2246
909	.1498	.5727	.9956	.4185	.8415	.2644	.6873	.1102	.5331	.9560	.3789	.8018	.2247
912	.1499	.5728	.9957	.4186	.8415	.2644	.6874	.1103	.5332	.9561	.3790	.8019	.2248
422915	10.1500	10.5729	10.9958	11.4187	11.8416	12.2645	12.6875	13.1104	13.5333	13.9562	14.3791	14.8020	15.2249
918	.1500	.5730	.9959	.4188	.8417	.2646	.6875	.1105	.5334	.9563	.3792	.8021	.2250
921	.1501	.5730	.9959	.4189	.8418	.2647	.6876	.1106	.5335	.9564	.3793	.8022	.2252
924	.1502	.5731	.9960	.4189	.8419	.2648	.6877	.1106	.5336	.9565	.3794	.8023	.2253
927	.1502	.5732	.9961	.4190	.8420	.2649	.6878	.1107	.5337	.9566	.3795	.8024	.2254
422930	10.1503	10.5733	10.9962	11.4191	11.8420	12.2650	12.6879	13.1108	13.5338	13.9567	14.3796	14.8026	15.2255
933	.1504	.5733	.9963	.4192	.8421	.2651	.6880	.1109	.5339	.9568	.3797	.8027	.2256
936	.1505	.5734	.9963	.4193	.8422	.2651	.6881	.1110	.5340	.9569	.3798	.8028	.2257
939	.1505	.5735	.9964	.4194	.8423	.2652	.6882	.1111	.5340	.9570	.3799	.8029	.2258
942	.1506	.5736	.9965	.4194	.8424	.2653	.6883	.1112	.5341	.9571	.3800	.8030	.2259
422945	10.1507	10.5736	10.9966	11.4195	11.8425	12.2654	12.6884	13.1113	13.5342	13.9572	14.3801	14.8031	15.2260
948	.1508	.5737	.9966	.4196	.8425	.2655	.6884	.1114	.5343	.9573	.3802	.8032	.2261
951	.1508	.5738	.9967	.4197	.8426	.2656	.6885	.1115	.5344	.9574	.3803	.8033	.2262
954	.1509	.5739	.9968	.4198	.8427	.2657	.6886	.1116	.5345	.9575	.3804	.8034	.2263
957	.1510	.5739	.9969	.4198	.8428	.2658	.6887	.1117	.5346	.9576	.3805	.8035	.2265
422960	10.1510	10.5740	10.9970	11.4199	11.8429	12.2658	12.6888	13.1118	13.5347	13.9577	14.3806	14.8036	15.2266
963	.1511	.5741	.9970	.4200	.8430	.2659	.6889	.1119	.5348	.9578	.3807	.8037	.2267
966	.1512	.5742	.9971	.4201	.8430	.2660	.6890	.1119	.5349	.9579	.3808	.8038	.2268
969	.1513	.5742	.9972	.4202	.8431	.2661	.6891	.1120	.5350	.9580	.3809	.8039	.2269
972	.1513	.5743	.9973	.4202	.8432	.2662	.6892	.1121	.5351	.9581	.3810	.8040	.2270
422975	10.1514	10.5744	10.9974	11.4203	11.8433	12.2663	12.6893	13.1122	13.5352	13.9582	14.3812	14.8041	15.2271
978	.1515	.5745	.9974	.4204	.8434	.2664	.6893	.1123	.5353	.9583	.3813	.8042	.2272
981	.1515	.5745	.9975	.4205	.8435	.2664	.6894	.1124	.5354	.9584	.3814	.8043	.2273
984	.1516	.5746	.9976	.4206	.8436	.2665	.6895	.1125	.5355	.9585	.3815	.8044	.2274
987	.1517	.5747	.9977	.4206	.8436	.2666	.6896	.1126	.5356	.9586	.3816	.8045	.2275
422990	10.1518	10.5748	10.9977	11.4207	11.8437	12.2667	12.6897	13.1127	13.5357	13.9687	14.3817	14.8047	15.2276
993	.1518	.5748	.9978	.4208	.8438	.2668	.6898	.1128	.5358	.9588	.3818	.8048	.2277
996	.1519	.5749	.9979	.4209	.8439	.2669	.6899	.1129	.5359	.9589	.3819	.8049	.2279
999	.1520	.5750	.9980	.4210	.8440	.2670	.6900	.1130	.5360	.9590	.3820	.8050	.2280
423002	.1520	.5751	.9981	.4211	.8441	.2671	.6901	.1131	.5361	.9591	.3821	.8051	.2281
423005	10.1521	10.5751	10.9981	11.4211	11.8441	12.2671	12.6902	13.1132	13.5362	13.9592	14.3822	14.8052	15.2282
008	.1522	.5752	.9982	.4212	.8442	.2672	.6902	.1132	.5363	.9593	.3823	.8053	.2283
011	.1523	.5753	.9983	.4213	.8443	.2673	.6903	.1133	.5364	.9594	.3824	.8054	.2284
014	.1523	.5754	.9984	.4214	.8444	.2674	.6904	.1134	.5364	.9595	.3825	.8055	.2285
017	.1524	.5754	.9984	.4215	.8445	.2675	.6905	.1135	.5365	.9596	.3826	.8056	.2286
423020	10.1525	10.5755	10.9985	11.4215	11.8446	12.2676	12.6906	13.1136	13.5366	13.9597	14.3827	14.8057	15.2287
023	.1526	.5756	.9986	.4216	.8446	.2677	.6907	.1137	.5367	.9598	.3828	.8058	.2288
026	.1526	.5757	.9987	.4217	.8447	.2678	.6908	.1138	.5368	.9599	.3829	.8059	.2289
029	.1527	.5757	.9988	.4218	.8448	.2678	.6909	.1139	.5369	.9600	.3830	.8060	.2290
032	.1528	.5758	.9988	.4219	.8449	.2679	.6910	.1140	.5370	.9601	.3831	.8061	.2292
423035	10.1528	10.5759	10.9989	11.4219	11.8450	12.2680	12.6911	13.1141	13.5371	13.9602	14.3832	14.8062	15.2293
038	.1529	.5760	.9990	.4220	.8451	.2681	.6911	.1142	.5372	.9603	.3833	.8063	.2294
041	.1530	.5760	.9991	.4221	.8451	.2672	.6912	.1143	.5373	.9604	.3834	.8064	.2295
044	.1531	.5761	.9991	.4222	.8452	.2683	.6913	.1144	.5374	.9605	.3835	.8065	.2296
047	.1531	.5762	.9992	.4223	.8453	.2684	.6914	.1145	.5375	.9606	.3836	.8066	.2297
423050	10.1532	10.5763	10.9993	11.4224	11.8454	12.2685	12.6915	13.1146	13.5376	13.9607	14.3837	14.8068	15.2298
053	.1533	.5763	.9994	.4224	.8455	.2685	.6916	.1146	.5377	.9607	.3838	.8069	.2299
056	.1533	.5764	.9995	.4225	.8456	.2686	.6917	.1147	.5378	.9608	.3839	.8070	.2300
059	.1534	.5765	.9995	.4226	.8457	.2687	.6918	.1148	.5379	.9609	.3840	.8071	.2301
062	.1535	.5766	.9996	.4227	.8457	.2688	.6919	.1149	.5380	.9610	.3841	.8072	.2302
423065	10.1536	10.5766	10.9997	11.4228	11.8458	12.2689	12.6920	13.1150	13.5381	13.9611	14.3842	14.8073	15.2303
068	.1536	.5767	.9998	.4228	.8459	.2690	.6920	.1151	.5382	.9612	.3843	.8074	.2304
071	.1537	.5768	.9998	.4229	.8460	.2691	.6921	.1152	.5383	.9613	.3844	.8075	.2306
074	.1538	.5769	.9999	.4230	.8461	.2691	.6922	.1153	.5384	.9614	.3845	.8076	.2307
077	.1538	.5769	11.0000	.4231	.8462	.2692	.6923	.1154	.5385	.9615	.3846	.8077	.2308
423080	10.1539	10.5770	11.0001	11.4232	11.8462	12.2693	12.6924	13.1155	13.5386	13.9616	14.3847	14.8078	15.2309
083	.1540	.5771	.0002	.4232	.8463	.2694	.6925	.1156	.5387	.9617	.3848	.8079	.2310
086	.1541	.5772	.0002	.4233	.8464	.2695	.6926	.1157	.5388	.9618	.3849	.8080	.2311
089	.1541	.5772	.0003	.4234	.8465	.2696	.6927	.1158	.5388	.9619	.3850	.8081	.2312
092	.1542	.5773	.0004	.4235	.8466	.2697	.6928	.1159	.5389	.9620	.3851	.8082	.5213
423095	10.1543	10.5774	11.0005	11.4236	11.8467	12.2698	12.6929	13.1159	13.5390	13.9621	14.3852	14.8083	15.2314
098	.1544	.5775	.0005	.4236	.8467	.2698	.6929	.1160	.5391	.9622	.3853	.8084	.2315
101	.1544	.5775	.0006	.4237	.8468	.2699	.6930	.1161	.5392	.9623	.3854	.8085	.2316
104	.1545	.5776	.0007	.4238	.8469	.2700	.6931	.1162	.5393	.9624	.3855	.8086	.2317
107	.1546	.5777	.0008	.4239	.8470	.2701	.6932	.1163	.5394	.9625	.3856	.8087	.2319
423110	10.1546	10.5778	11.0009	11.4240	11.8471	12.2702	12.6933	13.1164	13.5395	13.9626	14.3857	14.8089	15.2320
113	.1547	.5778	.0009	.4241	.8472	.2703	.6934	.1165	.5296	.9627	.3858	.8090	.2321
116	.1548	.5779	.0010	.4241	.8472	.2704	.6935	.1166	.5397	.9628	.3859	.8091	.2322
119	.1549	.5780	.0011	.4242	.8473	.2705	.6936	.1167	.5398	.9629	.3860	.8092	.2323
122	.1549	.5781	.0012	.4243	.8474	.2705	.6937	.1168	.5399	.9630	.3861	.8093	.2324
423125	10.1550	10.5781	11.0013	11.4244	11.8475	12.2706	12.6938	13.1169	13.5400	13.9631	14.3863	14.8094	15.2325
128	.1551	.5782	.0013	.4245	.8476	.2707	.6938	.1170	.5401	.9632	.3864	.8095	.2326
131	.1551	.5783	.0014	.4245	.8477	.2708	.6939	.1171	.5402	.9633	.3865	.8096	.2327
134	.1552	.5784	.0015	.4246	.8478	.2709	.6940	.1172	.5403	.9634	.3866	.8097	.2328
137	.1553	.5784	.0016	.4247	.8478	.2710	.6941	.1172	.5404	.9635	.3867	.8098	.2329
423140	10.1554	10.5785	11.0016	11.4248	11.8479	12.2711	12.6942	13.1173	13.5405	13.9636	14.3868	14.8099	15.2330
143	.1554	.5786	.0017	.4249	.8480	.2711	.6943	.1174	.5406	.9637	.3869	.8100	.2331
146	.1555	.5787	.0018	.4249	.8481	.2712	.6844	.1175	.5407	.9638	.3870	.8101	.2333
149	.1556	.5787	.0019	.4250	.8482	.2713	.6945	.1176	.5408	.9639	.3871	.8102	.2334
152	.1556	.5788	.0020	.4251	.8483	.2714	.6946	.1177	.5409	.9640	.3872	.8103	.2335
423155	10.1557	10.5789	11.0020	11.4252	11.8483	12.2715	12.6947	13.1178	13.5410	13.9641	14.3873	14.8104	15.2336
158	.1558	.5790	.0021	.4253	.8484	.2716	.6947	.1179	.5411	.9642	.3874	.8105	.2337
161	.1559	.5790	.0022	.4253	.8485	.2717	.6948	.1180	.5412	.9643	.3875	.8106	.2338
164	.1559	.5791	.0023	.4254	.8486	.2718	.6949	.1181	.5412	.9644	.3876	.8107	.2339
167	.1560	.5792	.0023	.4255	.8487	.2718	.6950	.1182	.5413	.9645	.3877	.8108	.2340
423170	10.1561	10.5793	11.0024	11.4256	11.8488	12.2719	12.6951	13.1183	13.5414	13.9646	14.3878	14.8110	15.2341
173	.1562	.5793	.0025	.4257	.8488	.2720	.6952	.1184	.5415	.9647	.3879	.8111	.2342
176	.1562	.5794	.0026	.4258	.8489	.2721	.6953	.1185	.5416	.9648	.3880	.8112	.2343
179	.1563	.5795	.0027	.4258	.8490	.2722	.6954	.1185	.5417	.9649	.3881	.8113	.2344
182	.1564	.5796	.0027	.4259	.8491	.2723	.6955	.1186	.5418	.9650	.3882	.8114	.2346
423185	10.1564	10.5796	11.0028	11.4260	11.8492	12.2724	12.6956	13.1187	13.5419	13.9651	14.3883	14.8115	15.2347
188	.1565	.5797	.0029	.4261	.8493	.2725	.6956	.1188	.5420	.9652	.3884	.8116	.2348
191	.1566	.5798	.0030	.4262	.8493	.2725	.6957	.1189	.5421	.9653	.3885	.8117	.2349
194	.1567	.5799	.0030	.4262	.8494	.2726	.6958	.1190	.5422	.9654	.3886	.8118	.2350
197	.1567	.5799	.0031	.4263	.8495	.2727	.6959	.1191	.5423	.9655	.3887	.8119	.2351
423200	10.1568	10.5800	11.0032	11.4264	11.8496	12.2728	12.6960	13.1192	13.5424	13.9656	14.3888	14.8120	15.2352

MEGACYCLES PER SECOND

H A R M O N I C S

BASIC FREQ.	37	38	39	40	41	42	43	44	45	46	47	48	50
422900	15.6473	16.0702	16.4931	16.9160	17.3389	17.7618	18.1847	18.6076	19.0305	19.4534	19.8763	20.2992	21.1450
903	.6474	.0703	.4932	.9161	.3390	.7619	.1848	.6077	.0306	.4535	.8764	.2993	.1452
906	.6475	.0704	.4933	.9162	.3391	.7621	.1850	.6079	.0308	.4537	.8766	.2995	.1453
909	.6476	.0705	.4935	.9164	.3393	.7622	.1851	.6080	.0309	.4538	.8767	.2996	.1455
912	.6477	.0707	.4936	.9165	.3394	.7623	.1852	.6081	.0310	.4540	.8769	.2998	.1456
422915	15.6479	16.0708	16.4937	16.9166	17.3395	17.7624	18.1853	18.6083	19.0312	19.4541	19.8770	20.2999	21.1458
918	.6480	.0709	.4938	.9167	.3396	.7626	.1855	.6084	.0313	.4542	.8771	.3001	.1459
921	.6481	.0710	.4939	.9168	.3398	.7627	.1856	.6085	.0314	.4544	.8773	.3002	.1461
924	.6482	.0711	.4940	.9170	.3399	.7628	.1857	.6087	.0316	.4545	.8774	.3004	.1462
927	.6483	.0712	.4942	.9171	.3400	.7629	.1859	.6088	.0317	.4546	.8776	.3005	.1464
422930	15.6484	16.0713	16.4943	16.9172	17.3401	17.7631	18.1860	18.6089	19.0319	19.4548	19.8777	20.3006	21.1465
933	.6485	.0715	.4944	.9173	.3403	.7632	.1861	.6091	.0320	.4549	.8779	.3008	.1467
936	.6486	.0716	.4945	.9174	.3404	.7633	.1862	.6092	.0321	.4551	.8780	.3009	.1468
939	.6487	.0717	.4946	.9176	.3405	.7634	.1864	.6093	.0323	.4552	.8781	.3011	.1470
942	.6489	.0718	.4947	.9177	.3406	.7636	.1865	.6094	.0324	.4553	.8783	.3012	.1471
422945	15.6490	16.0719	16.4949	16.9178	17.3407	17.7637	18.1866	18.6096	19.0325	19.4555	19.8784	20.3014	21.1473
948	.6491	.0720	.4950	.9179	.3409	.7638	.1868	.6097	.0327	.4556	.8786	.3015	.1474
951	.6492	.9721	.4951	.9180	.3410	.7639	.1869	.6098	.0328	.4557	.8787	.3016	.1476
954	.6493	.9723	.4952	.9182	.3411	.7641	.1870	.6100	.0329	.4559	.8788	.3018	.1477
957	.6494	.0724	.4953	.9183	.3412	.7642	.1872	.6101	.0331	.4560	.8790	.3019	.1479
422960	15.6495	16.0725	16.4954	16.9184	17.3414	17.7643	18.1873	18.6102	19.0332	19.4562	19.8791	20.3021	21.1480
963	.6496	.0726	.4956	.9185	.3415	.7644	.1874	.6104	.0333	.4563	.8793	.3022	.1482
966	.6497	.0727	.4957	.9186	.3416	.7646	.1875	.6105	.0335	.4564	.8794	.3024	.1483
969	.6499	.0728	.4958	.9188	.3417	.7647	.1877	.6106	.0336	.4566	.8795	.3025	.1485
972	.6500	.0729	.4959	.9189	.3419	.7648	.1878	.6108	.0337	.4567	.8797	.3027	.1486
422975	15.6501	16.0731	16.4960	16.9190	17.3420	17.7650	18.1879	18.6109	19.0339	19.4569	19.8798	20.3028	21.1488
978	.6502	.0732	.4961	.9191	.3421	.7651	.1881	.6110	.0340	.4570	.8800	.3029	.1489
981	.6503	.0733	.4963	.9192	.3422	.7652	.1882	.6112	.0341	.4571	.8801	.3031	.1491
984	.6504	.0734	.4964	.9194	.3423	.7653	.1883	.6113	.0343	.4573	.8802	.3032	.1492
987	.6505	.0735	.4965	.9195	.3425	.7655	.1884	.6114	.0344	.4574	.8804	.3034	.1494
422990	15.6506	16.0736	16.4966	16.9196	17.3426	17.7656	18.1886	18.6116	19.0346	19.4575	19.8805	20.3035	21.1495
993	.6507	.0737	.4967	.9197	.3427	.7657	.1887	.6117	.0347	.4577	.8807	.3037	.1497
996	.6509	.0738	.4968	.9198	.3428	.7658	.1888	.6118	.0348	.4578	.8808	.3038	.1498
999	.6510	.0740	.4970	.9200	.3430	.7660	.1890	.6120	.0350	.4580	.8810	.3040	.1500
423002	.6511	.0741	.4971	.9201	.3431	.7661	.1891	.6121	.0351	.4581	.8811	.3041	.1501
423005	15.6512	16.0742	16.4972	16.9202	17.3432	17.7662	18.1892	18.6122	19.0352	19.4582	19.8812	20.3042	21.1503
008	.6513	.0743	.4973	.9203	.3433	.7663	.1893	.6124	.0354	.4584	.8814	.3044	.1504
011	.6514	.0744	.4974	.9204	.3435	.7665	.1895	.6125	.0355	.4585	.8815	.3045	.1506
014	.6515	.0745	.4975	.9206	.3426	.7666	.1896	.6126	.0356	.4586	.8817	.3047	.1507
017	.6516	.0746	.4977	.9207	.3437	.7667	.1897	.6127	.0358	.4588	.8818	.3048	.1509
423020	15.6517	16.0748	16.4978	16.9208	17.3438	17.7668	18.1899	18.6129	19.0359	19.4589	19.8819	20.3050	21.1510
023	.6519	.0749	.4979	.9209	.3439	.7670	.1900	.6130	.0360	.4591	.8821	.3051	.1512
026	.6520	.0750	.4980	.9210	.3441	.7671	.1901	.6131	.0362	.4592	.8822	.3052	.1513
029	.6521	.0751	.4981	.9212	.3442	.7672	.1902	.6133	.0363	.4593	.8824	.3054	.1515
032	.6522	.0752	.4982	.9213	.3443	.7673	.1904	.6134	.0364	.4595	.8825	.3055	.1516
423035	15.6523	16.0753	16.4984	16.9214	17.3444	17.7675	18.1905	18.6135	19.0366	19.4596	19.8826	20.3057	21.1518
038	.6524	.0754	.4985	.9215	.3446	.7676	.1906	.6137	.0367	.4597	.8828	.3058	.1519
041	.6525	.0756	.4986	.9216	.3447	.7677	.1908	.6138	.0368	.4599	.8829	.3060	.1521
044	.6526	.0757	.4987	.9218	.3448	.7678	.1909	.6139	.0370	.4600	.8831	.3061	.1522
047	.6527	.0758	.4988	.9219	.3449	.7680	.1910	.6141	.0371	.4602	.8832	.3063	.1524
423050	15.6529	16.0759	16.4990	16.9220	17.3451	17.7681	18.1912	18.6142	19.9373	19.4603	19.8834	20.3065	21.1525
053	.6530	.0760	.4991	.9221	.3452	.7682	.1913	.6143	.0374	.4604	.8835	.3065	.1527
056	.6531	.0761	.4992	.9222	.3453	.7684	.1914	.6145	.0375	.4606	.8836	.3067	.1528
059	.6532	.0762	.4993	.9224	.3454	.7685	.1915	.6146	.0377	.4607	.8838	.3068	.1530
062	.6533	.0764	.4994	.9225	.3455	.7686	.1917	.6147	.0378	.4609	.8839	.3070	.1531
423065	15.6534	16.0765	16.4995	16.9226	17.3457	17.7687	18.1918	18.6149	19.0379	19.4610	19.8841	20.3071	21.1533
068	.6535	.0766	.4997	.9227	.3458	.7689	.1919	.6150	.0381	.4611	.8842	.3073	.1534
071	.6536	.0767	.4998	.9228	.3459	.7690	.1921	.6151	.0382	.4613	.8843	.3074	.1536
074	.6537	.0768	.4999	.9230	.3460	.7691	.1922	.6153	.0383	.4614	.8845	.3076	.1537
077	.6538	.0769	.5000	.9231	.3462	.7692	.1923	.6154	.0385	.4615	.8846	.3077	.1539
423080	15.6540	16.0770	16.5001	16.9232	17.3463	17.7694	18.1924	18.6155	19.0386	19.4617	19.8848	20.3078	21.1540
083	.6541	.0772	.5002	.9233	.3464	.7695	.1926	.6157	.0387	.4618	.8849	.3080	.1542
086	.6542	.0773	.5004	.9234	.3465	.7696	.1927	.6158	.0389	.4620	.8850	.3081	.1543
089	.6543	.0774	.5005	.9236	.3466	.7697	.1928	.6159	.0390	.4621	.8852	.3083	.1545
092	.6544	.0775	.5006	.9237	.3468	.7699	.1930	.6160	.0391	.4622	.8853	.3084	.1546
423095	15.6545	16.0776	16.5007	16.9238	17.3469	17.7700	18.1931	18.6162	19.0393	19.4624	19.8855	20.3086	21.1548
098	.6546	.0777	.5008	.9239	.3470	.7701	.1932	.6163	.0394	.4625	.8856	.3087	.1549
101	.6547	.0778	.5009	.9240	.3471	.7702	.1933	.6164	.0395	.4626	.8857	.3088	.1551
104	.6548	.0780	.5011	.9242	.3473	.7704	.1935	.6166	.0397	.4628	.8859	.3090	.1552
107	.6550	.0781	.5012	.9243	.3474	.7705	.1936	.6167	.0398	.4629	.8860	.3091	.1554
423110	15.6551	16.0782	16.5013	16.9244	17.3475	17.7706	18.1937	18.6168	19.0400	19.4631	19.8862	20.3093	21.1555
113	.6552	.0783	.5014	.9245	.3476	.7707	.1939	.6170	.0401	.4632	.8863	.3094	.1557
116	.6553	.0784	.5015	.9246	.3478	.7709	.1940	.6171	.0402	.4633	.8865	.3096	.1558
119	.6554	.0785	.5016	.9248	.3479	.7710	.1941	.6172	.0404	.4635	.8866	.3097	.1560
122	.6555	.0786	.5018	.9249	.3480	.7711	.1942	.6174	.0405	.4636	.8867	.3099	.1561
423125	15.6556	16.0788	16.5019	16.9250	17.3481	17.7713	18.1944	18.6175	19.0406	19.4638	19.8869	20.3100	21.1563
128	.6557	.0789	.5020	.9251	.3482	.7714	.1945	.6176	.0408	.4639	.8870	.3101	.1564
131	.6558	.0790	.5021	.9252	.3484	.7715	.1946	.6178	.0409	.4640	.8872	.3103	.1566
134	.6560	.0791	.5022	.9254	.3485	.7716	.1948	.6179	.0410	.4642	.8873	.3104	.1567
137	.6561	.0792	.5023	.9255	.3486	.7718	.1949	.6180	.0412	.4643	.8874	.3106	.1569
423140	15.6562	16.0793	16.5025	16.9256	17.3487	17.7719	18.1950	18.6182	19.0413	19.4644	19.8876	20.3107	21.1570
143	.6563	.0794	.5026	.9257	.3489	.7720	.1951	.6183	.0414	.4646	.8877	.3109	.1572
146	.6564	.0795	.5027	.9258	.3490	.7721	.1953	.6184	.0416	.4647	.8879	.3110	.1573
149	.6565	.0797	.5028	.9260	.3491	.7723	.1954	.6186	.0417	.4649	.8880	.3112	.1575
152	.6556	.0798	.5029	.9261	.3492	.7724	.1955	.6187	.0418	.4650	.8881	.3113	.1576
423155	15.6567	16.0799	16.5030	16.9262	17.3494	17.7725	18.1957	18.6188	19.0420	19.4651	19.8883	20.3114	21.1578
158	.6568	.0800	.5032	.9263	.3495	.7726	.1958	.6190	.0421	.4653	.8884	.3116	.1579
161	.6570	.0801	.5033	.9264	.3496	.7728	.1959	.6191	.0422	.4654	.8886	.3117	.1581
164	.6571	.0802	.5034	.9266	.3497	.7729	.1961	.6192	.0424	.4655	.8887	.3119	.1582
167	.6572	.0803	.5035	.9267	.3498	.7730	.1962	.6193	.0425	.4657	.8888	.3120	.1584
423170	15.6573	16.0805	16.5036	16.9268	17.3500	17.7731	18.1963	18.6195	19.0427	19.4658	19.8890	20.3122	21.1585
173	.6574	.0806	.5037	.9269	.3501	.7733	.1964	.6196	.0428	.4660	.8891	.3123	.1587
176	.6575	.0807	.5039	.9270	.3502	.7734	.1966	.6197	.0429	.4661	.8893	.3124	.1588
179	.6576	.0808	.5040	.9272	.3503	.7735	.1967	.6199	.0431	.4662	.8894	.3126	.1590
182	.6577	.0809	.5041	.9273	.3505	.7736	.1968	.6200	.0432	.4664	.8896	.3127	.1591
423185	15.6578	16.0810	16.5042	16.9274	17.3506	17.7738	18.1970	18.6201	19.0433	19.4665	19.8897	20.3129	21.1593
188	.6580	.0811	.5043	.9275	.3507	.7739	.1971	.6203	.0435	.4666	.8898	.3130	.1594
191	.6581	.0813	.5044	.9276	.3508	.7740	.1972	.6204	.0436	.4668	.8900	.3132	.1596
194	.6582	.0814	.5046	.9278	.3510	.7741	.1973	.6205	.0437	.4669	.8901	.3133	.1597
197	.6583	.0815	.5047	.9279	.3511	.7743	.1975	.6207	.0439	.4671	.8903	.3135	.1599
423200	15.6584	16.0816	16.5048	16.9280	17.3512	17.7744	18.1976	18.6208	19.0440	19.4672	19.8904	20.3136	21.1600

HARMONICS

BASIC FREQ.	24	25	26	27	28	29	30	31	32	33	34	35	36
423200	10.1568	10.5800	11.0032	11.4264	11.8496	12.2728	12.6960	13.1192	13.5424	13.9656	14.3888	14.8120	15.2352
203	.1569	.5801	.0033	.4265	.8497	.2729	.6961	.1193	.5425	.9657	.3889	.8121	.2353
206	.1569	.5802	.0034	.4266	.8498	.2730	.6962	.1194	.5426	.9658	.3890	.8122	.2354
209	.1570	.5802	.0034	.4266	.8499	.2731	.6963	.1195	.5427	.9659	.3891	.8123	.2355
212	.1571	.5803	.0035	.4267	.8499	.2731	.6964	.1196	.5428	.9660	.3892	.8124	.2356
423215	10.1572	10.5804	11.0036	11.4268	11.8500	12.2732	12.6965	13.1197	13.5429	13.9661	14.3893	14.8125	15.2357
218	.1572	.5805	.0037	.4269	.8501	.2733	.6965	.1198	.5430	.9662	.3894	.8126	.2358
221	.1573	.5805	.0037	.4270	.8502	.2734	.6966	.1199	.5431	.9663	.3895	.8127	.2360
224	.1574	.5806	.0038	.4270	.8503	.2735	.6967	.1199	.5432	.9664	.3896	.8128	.2361
227	.1574	.5807	.0039	.4271	.8504	.2736	.6968	.1200	.5433	.9665	.3897	.8129	.2362
423230	10.1575	10.5808	11.0040	11.4272	11.8504	12.2737	12.6969	13.1201	13.5434	13.9666	14.3898	14.8131	15.2363
233	.1576	.5808	.0041	.4273	.8505	.2738	.6970	.1202	.5435	.9667	.3899	.8132	.2364
236	.1577	.5809	.0041	.4274	.8506	.2738	.6971	.1203	.5436	.9668	.3900	.8133	.2365
239	.1577	.5810	.0042	.4275	.8507	.2739	.6972	.1204	.5436	.9669	.3901	.8134	.2366
242	.1578	.5811	.0043	.4275	.8508	.2740	.6973	.1205	.5437	.9670	.3902	.8135	.2367
423245	10.1579	10.5811	11.0044	11.4276	11.8509	12.2741	12.6974	13.1206	13.5438	13.9671	14.3903	14.8136	15.2368
248	.1580	.5812	.0044	.4377	.8509	.2742	.6974	.1207	.5439	.9672	.3904	.8137	.2369
251	.1580	.5813	.0045	.4278	.8510	.2743	.6975	.1208	.5440	.9673	.3905	.8138	.2370
254	.1581	.5814	.0046	.4279	.8511	.2744	.6976	.1209	.5441	.9674	.3906	.8139	.2371
257	.1582	.5814	.0047	.4279	.8512	.2745	.6977	.1210	.5442	.9675	.3907	.8140	.2373
423260	10.1582	10.5815	11.0048	11.4280	11.8513	12.2745	12.6978	13.1211	13.5443	13.9676	14.3908	14.8141	15.2374
263	.1583	.5816	.0048	.4281	.8514	.2746	.6979	.1212	.6444	.9677	.3909	.8142	.2375
266	.1584	.5817	.0049	.4282	.8514	.2747	.6980	.1212	.5445	.9678	.3910	.8143	.2376
269	.1585	.5817	.0050	.4283	.8515	.2748	.6981	.1213	.5446	.9679	.3911	.8144	.2377
272	.1585	.5818	.0051	.4283	.8516	.2749	.6982	.1214	.5447	.9680	.3912	.8145	.2378
423275	10.1586	10.5819	11.0052	11.4284	11.8517	12.2750	12.6983	13.1215	13.5448	13.9681	14.3914	14.8146	15.2379
278	.1587	.5820	.0052	.4285	.8518	.2751	.6983	.1216	.5449	.9682	.3915	.8147	.2380
281	.1587	.5820	.0053	.4286	.8519	.2751	.6984	.1217	.5450	.9683	.3916	.8148	.2381
284	.1588	.5821	.0054	.4287	.8520	.2752	.6985	.1218	.5451	.9684	.3917	.8149	.2382
287	.1589	.5822	.0055	.4287	.8520	.2753	.6986	.1219	.5452	.9685	.3918	.8150	.2383
423290	10.1590	10.5823	11.0055	11.4288	11.8521	12.2754	12.6987	13.1220	13.5453	13.9686	14.3919	14.8152	15.2384
293	.1590	.5823	.0056	.4289	.8522	.2755	.6988	.1221	.5454	.9687	.3920	.8153	.2385
296	.1591	.5824	.0057	.4290	.8523	.2756	.6989	.1222	.5455	.9688	.3921	.8154	.2387
299	.1592	.5825	.0058	.4291	.8524	.2757	.6990	.1223	.5456	.9689	.3922	.8155	.2388
302	.1592	.5826	.0059	.4292	.8525	.2758	.6991	.1224	.5457	.9690	.3923	.8156	.2389
423305	10.1593	10.5826	11.0059	11.4292	11.8525	12.2758	12.6992	13.1225	13.5458	13.9691	14.3924	14.8157	15.2390
308	.1594	.5827	.0060	.4293	.8526	.2759	.6992	.1225	.5459	.9692	.3925	.8158	.2391
311	.1595	.5828	.0061	.4294	.8527	.2760	.6993	.1226	.5460	.9693	.3926	.8159	.2392
314	.1595	.5829	.0062	.4295	.8528	.2761	.6994	.1227	.5460	.9694	.3927	.8160	.2393
317	.1596	.5829	.0062	.4296	.8529	.2762	.6995	.1228	.5461	.9695	.3928	.8161	.2394
423320	10.1597	10.5830	11.0063	11.4296	11.8530	12.2763	12.6996	13.1229	13.5462	13.9696	14.3929	14.8162	15.2395
323	.1598	.5831	.0064	.4297	.8530	.2764	.6997	.1230	.5463	.9697	.3930	.8163	.2396
326	.1598	.5832	.0065	.4298	.8531	.2765	.6998	.1231	.5464	.9698	.3931	.8164	.2397
329	.1599	.5832	.0066	.4299	.8532	.2765	.6999	.1232	.5465	.9699	.3932	.8165	.2398
332	.1600	.5833	.0066	.4300	.8533	.2766	.7000	.1233	.5466	.9700	.3933	.8166	.2400
423335	10.1600	10.5834	11.0067	11.4300	11.8534	12.2767	12.7001	13.1234	13.5467	13.9701	14.3934	14.8167	15.2401
338	.1601	.5835	.0068	.4301	.8535	.2768	.7001	.1235	.5468	.9702	.3935	.8168	.2402
341	.1602	.5835	.0069	.4302	.8535	.2769	.7002	.1236	.5469	.9703	.3936	.8169	.2403
344	.1603	.5836	.0069	.4303	.8536	.2770	.7003	.1237	.5470	.9704	.3937	.8170	.2404
347	.1603	.5837	.0070	.4304	.8537	.2771	.7004	.1238	.5471	.9705	.3938	.8171	.2405
423350	10.1604	10.5838	11.0071	11.4305	11.8538	12.2772	12.7005	13.1239	13.5472	13.9706	14.3939	14.8173	15.2406
353	.1605	.5838	.0072	.4305	.8539	.2772	.7006	.1239	.5473	.9706	.3940	.8174	.2407
356	.1605	.5839	.0073	.4306	.8540	.2773	.7007	.1240	.5474	.9707	.3941	.8175	.2408
359	.1606	.5840	.0073	.4307	.8541	.2774	.7008	.1241	.5475	.9708	.3942	.8176	.2409
362	.1607	.5841	.0074	.4308	.8541	.2775	.7009	.1242	.5476	.9709	.3943	.8177	.2410
423365	10.1608	10.5841	11.0075	11.4309	11.8542	12.2776	12.7010	13.1243	13.5477	13.9710	14.3944	14.8178	15.2411
368	.1608	.5842	.0076	.4309	.8543	.2777	.7010	.1244	.5478	.9711	.3945	.8179	.2412
371	.1609	.5843	.0076	.4310	.8544	.2778	.7011	.1245	.5479	.8712	.3946	.8180	.2414
374	.1610	.5844	.0077	.4311	.8545	.2778	.7012	.1246	.5480	.9713	.3947	.8181	.2415
377	.1610	.5844	.0078	.4312	.8546	.2779	.7013	.1247	.5481	.9714	.3948	.8182	.2416
423380	10.1611	10.5845	11.0079	11.4313	11.8546	12.2780	12.7014	13.1248	13.5482	13.9715	14.3949	14.8183	15.2417
383	.1612	.5846	.0080	.4313	.8547	.2781	.7015	.1249	.5483	.9716	.3950	.8184	.2418
386	.1613	.5847	.0080	.4314	.8548	.2782	.7016	.1250	.5484	.9717	.3951	.8185	.2419
389	.1613	.5847	.0081	.4315	.8549	.2783	.7017	.1251	.5484	.9718	.3952	.8186	.2420
392	.1614	.5848	.0082	.4316	.8550	.2784	.7018	.1252	.5485	.9719	.3953	.8187	.2421
423395	10.1615	10.5849	11.0083	11.4317	11.8551	12.2785	12.7019	13.1252	13.5486	13.9720	14.3954	14.8188	15.2422
398	.1616	.5850	.0083	.4317	.8551	.2785	.7019	.1253	.5487	.9721	.3955	.8189	.2423
401	.1616	.5850	.0084	.4318	.8552	.2786	.7020	.1254	.5488	.9722	.3956	.8190	.2424
404	.1617	.5851	.0085	.4319	.8553	.2787	.7021	.1255	.5489	.9723	.3957	.8191	.2425
407	.1618	.5852	.0086	.4320	.8554	.2788	.7022	.1256	.5490	.9724	.3958	.8192	.2427
423410	10.1618	10.5853	11.0087	11.4321	11.8555	12.2789	12.7023	13.1257	13.5491	13.9725	14.3959	14.8194	15.2428
413	.1619	.5853	.0087	.4322	.8556	.2790	.7024	.1258	.5492	.9726	.3960	.8195	.2429
416	.1620	.5854	.0088	.4322	.8556	.2791	.7025	.1259	.5493	.9727	.3961	.8196	.2430
419	.1621	.5855	.0089	.4323	.8557	.2792	.7026	.1260	.5494	.9728	.3962	.8197	.2431
422	.1621	.5856	.0090	.4324	.8558	.2792	.7027	.1261	.5495	.9729	.3963	.8198	.2432
423425	10.1622	10.5856	11.0091	11.4325	11.8559	12.2793	12.7028	13.1262	13.5496	13.9730	14.3965	14.8199	15.2433
428	.1623	.5857	.0091	.4326	.8560	.2794	.7028	.1263	.5497	.9731	.3966	.8200	.2434
431	.1623	.5858	.0092	.4326	.8561	.2795	.7029	.1264	.5498	.9732	.3967	.8201	.2435
434	.1624	.5859	.0093	.4327	.8562	.2796	.7030	.1265	.5499	.9733	.3968	.8202	.2436
437	.1625	.5859	.0094	.4328	.8562	.2797	.7031	.1265	.5500	.9734	.3969	.8203	.2437
423440	10.1626	10.5860	11.0094	11.4329	11.8563	12.2798	12.7032	13.1266	13.5501	13.9735	14.3970	14.8204	15.2438
443	.1626	.5861	.0095	.4330	.8564	.2798	.7033	.1267	.5502	.9736	.3971	.8205	.2439
446	.1627	.5862	.0096	.4330	.8565	.2799	.7034	.1268	.5503	.9737	.3972	.8206	.2441
449	.1628	.5862	.0097	.4331	.8566	.2800	.7035	.1269	.5504	.9738	.3973	.8207	.2442
452	.1628	.5863	.0098	.4332	.8567	.2801	.7036	.1270	.5505	.9739	.3974	.8208	.2443
423455	10.1629	10.5864	11.0098	11.4333	11.8567	12.2802	12.7037	13.1271	13.5506	13.9740	14.3975	14.8209	15.2444
458	.1630	.5865	.0099	.4334	.8568	.2803	.7037	.1272	.5507	.9741	.3976	.8210	.2445
461	.1631	.5865	.0100	.4334	.8569	.2804	.7038	.1273	.5508	.9742	.3977	.8211	.2446
464	.1631	.5866	.0101	.4335	.8570	.2805	.7039	.1274	.5508	.9743	.3978	.8212	.2447
467	.1632	.5867	.0101	.4336	.8571	.2805	.7040	.1275	.5509	.9744	.3979	.8213	.2448
423470	10.1633	10.5868	11.0102	11.4337	11.8572	12.2806	12.7041	13.1276	13.5510	13.9745	14.3980	14.8215	15.2449
473	.1634	.5868	.0103	.4338	.8572	.2807	.7042	.1277	.5511	.9746	.3981	.8216	.2450
476	.1634	.5869	.0104	.4339	.8573	.2808	.7043	.1278	.5512	.9747	.3982	.8217	.2451
479	.1635	.5870	.0105	.4339	.8574	.2809	.7044	.1278	.5513	.9748	.3983	.8218	.2452
482	.1636	.5871	.0105	.4340	.8575	.2810	.7045	.1279	.5514	.9749	.3984	.8219	.2454
423485	10.1636	10.5871	11.0106	11.4341	11.8576	12.2811	12.7046	13.1280	13.5515	13.9750	14.3985	14.8220	15.2455
488	.1637	.5872	.0107	.4342	.8577	.2812	.7046	.1281	.5516	.9751	.3986	.8221	.2456
491	.1638	.5873	.0108	.4343	.8577	.2812	.7047	.1282	.5517	.9752	.3987	.8222	.2457
494	.1639	.5874	.0108	.4343	.8578	.2813	.7048	.1283	.5518	.9753	.3988	.8223	.2458
497	.1639	.5874	.0109	.4344	.8579	.2814	.7049	.1284	.5519	.9754	.3989	.8224	.2459
423500	10.1640	10.5875	11.0110	11.4345	11.8580	12.2815	12.7050	13.1285	13.5520	13.9755	14.3990	14.8225	15.2460

MEGACYCLES PER SECOND

H A R M O N I C S

BASIC FREQ.	37	38	39	40	41	42	43	44	45	46	47	48	50
423200	15.6584	16.0816	16.5048	16.9280	17.3512	17.7744	18.1976	18.6208	19.0440	19.4672	19.8904	20.3136	21.1600
203	.6585	.0817	.5049	.9281	.3513	.7745	.1977	.6209	.0441	.4673	.8905	.3137	.1602
206	.6586	.0818	.5050	.9282	.3514	.7747	.1979	.6211	.0443	.4675	.8907	.3139	.1603
209	.6587	.0819	.5052	.9284	.3516	.7748	.1980	.6212	.0444	.4676	.8908	.3140	.1605
212	.6588	.0821	.5053	.9285	.3517	.7749	.1981	.6213	.0445	.4678	.8910	.3142	.1606
423215	15.6590	16.0822	16.5054	16.9286	17.3518	17.7750	18.1982	18.6215	19.0447	19.4679	19.8911	20.3143	21.1608
218	.6591	.0823	.5055	.9287	.3519	.7752	.1984	.6216	.0448	.4680	.8912	.3145	.1609
221	.6592	.0824	.5056	.9288	.3521	.7753	.1985	.6217	.0449	.4682	.8914	.3146	.1611
224	.6593	.0925	.5057	.9290	.3522	.7754	.1986	.6219	.0451	.4683	.8915	.3148	.1612
227	.6594	.0826	.5059	.9291	.3523	.7755	.1988	.6220	.0452	.4684	.8917	.3149	.1614
423230	15.6595	16.0827	16.5060	16.9292	17.3524	17.7757	18.1989	18.6221	19.0454	19.4686	19.8918	20.3150	21.1615
233	.6596	.0829	.5061	.9293	.3526	.7758	.1990	.6223	.0455	.4687	.8920	.3152	.1617
236	.6597	.0830	.5062	.9294	.3527	.7759	.1991	.6224	.0456	.4689	.8921	.3153	.1618
239	.6598	.0831	.5063	.9296	.3528	.7760	.1993	.6225	.0458	.4690	.8922	.3155	.1620
242	.6600	.0832	.5064	.9297	.3529	.7762	.1994	.6226	.0459	.4691	.8924	.3156	.1621
423245	15.6601	16.0833	16.5066	16.9298	17.3530	17.7763	18.1995	18.6228	19.0460	19.4693	19.8925	20.3158	21.1623
248	.6602	.0834	.5067	.9299	.3532	.7764	.1997	.6229	.0462	.4694	.8927	.3159	.1624
251	.6603	.0835	.5068	.9300	.3533	.7765	.1998	.6230	.0463	.4695	.8928	.3160	.1626
254	.6604	.0837	.5069	.9302	.3534	.7767	.1999	.6232	.0464	.4697	.8929	.3162	.1627
257	.6605	.0838	.5070	.9303	.3535	.7768	.2001	.6233	.0466	.4698	.8931	.3163	.1629
423260	15.6606	16.0839	16.5071	16.9304	17.3537	17.7769	18.2002	18.6234	19.0467	19.4700	19.8932	20.3165	21.1630
263	.6607	.0840	.5073	.9305	.3538	.7770	.2003	.6236	.0468	.4701	.8934	.3166	.1632
266	.6608	.0841	.5074	.9306	.3539	.7772	.2004	.6237	.0470	.4702	.8935	.3168	.1633
269	.6610	.0842	.5075	.9308	.3540	.7773	.2006	.6238	.0471	.4704	.8936	.3169	.1635
272	.6611	.0843	.5076	.9309	.3542	.7774	.2007	.6240	.0472	.4705	.8938	.3171	.1636
423275	15.6612	16.0845	16.5077	16.9310	17.3543	17.7776	18.2008	18.6241	19.0474	19.4707	19.8939	20.3172	21.1638
278	.6613	.0846	.5078	.9311	.3544	.7777	.2010	.6242	.0475	.4708	.8941	.3173	.1639
281	.6614	.0847	.5080	.9312	.3545	.7778	.2011	.6244	.0476	.4709	.8942	.3175	.1641
284	.6615	.0848	.5081	.9314	.3546	.7779	.2012	.6245	.0478	.4711	.8943	.3176	.1642
287	.6616	.0849	.5082	.9315	.3548	.7781	.2013	.6246	.0479	.4712	.8945	.3178	.1644
423290	15.6617	16.0850	16.5083	16.9316	17.3549	17.7782	18.2015	18.6248	19.0481	19.4713	19.8946	20.3179	21.1645
293	.6618	.0851	.5084	.9317	.3550	.7783	.2016	.6249	.0482	.4715	.8948	.3181	.1647
296	.6620	.0852	.5085	.9318	.3551	.7784	.2017	.6250	.0483	.4716	.8949	.3182	.1648
299	.6621	.0854	.5087	.9320	.3553	.7786	.2019	.6252	.0485	.4718	.8951	.3184	.1650
302	.6622	.0855	.5088	.9321	.3554	.7787	.2020	.6253	.0486	.4719	.8952	.3185	.1651
423305	15.6623	16.0856	16.5089	16.9322	17.3555	17.7788	18.2021	18.6254	19.0487	19.4720	19.8953	20.3186	21.1653
308	.6624	.0857	.5090	.9323	.3556	.7789	.2022	.6256	.0489	.4722	.8955	.3188	.1654
311	.6625	.0858	.5091	.9324	.3558	.7791	.2024	.6257	.0490	.4723	.8956	.3189	.1656
314	.6626	.0859	.5092	.9326	.3559	.7792	.2025	.6258	.0491	.4724	.8958	.3191	.1657
317	.6627	.0860	.5094	.9327	.3560	.7793	.2026	.6259	.0493	.4726	.8959	.3192	.1659
423320	15.6628	16.0862	16.5095	16.9328	17.3561	17.7794	18.2028	18.6261	19.0494	19.4727	19.8960	20.3194	21.1660
323	.6630	.0863	.5096	.9329	.3562	.7796	.2029	.6262	.0495	.4729	.8962	.3195	.1662
326	.6631	.0864	.5097	.9330	.3564	.7797	.2030	.6263	.0497	.4730	.8963	.3196	.1663
329	.6632	.0865	.5098	.9332	.3565	.7798	.2031	.6265	.0498	.4731	.8965	.3198	.1665
332	.6633	.0866	.5099	.9333	.3566	.7799	.2033	.6266	.0499	.4733	.8966	.3199	.1666
423335	15.6634	16.0867	16.5101	16.9334	17.3567	17.7801	18.2034	18.6267	19.0501	19.4734	19.8967	20.3201	21.1668
338	.6635	.0868	.5102	.9335	.3569	.7802	.2035	.6269	.0502	.4735	.8969	.3202	.1669
341	.6636	.0870	.5103	.9336	.3570	.7803	.2037	.6270	.0503	.4737	.8970	.3204	.1671
344	.6637	.0871	.5104	.9338	.3571	.7804	.2038	.6271	.0505	.4738	.8972	.3205	.1672
347	.6638	.0872	.5105	.9339	.3572	.7806	.2039	.6273	.0506	.4740	.8973	.3207	.1674
423350	15.6640	16.0873	16.5107	16.9340	17.3574	17.7807	18.2041	18.6274	19.0508	19.4741	19.8975	20.3208	21.1675
353	.6641	.0874	.5108	.9341	.3575	.7808	.2042	.6275	.0509	.4742	.8976	.3209	.1677
356	.6642	.0875	.5109	.9342	.3576	.7810	.2043	.6277	.0510	.4744	.8977	.3211	.1678
359	.6643	.0876	.5110	.9344	.3577	.7811	.2044	.6278	.0512	.4745	.8979	.3212	.1680
362	.6644	.0878	.5111	.9345	.3578	.7812	.2046	.6279	.0513	.4747	.8980	.3214	.1681
423365	15.6645	16.0879	16.5112	16.9346	17.3580	17.7813	18.2047	18.6281	19.0514	19.4748	19.8982	20.3215	21.1683
368	.6646	.0880	.5114	.9347	.3581	.7815	.2048	.6282	.0516	.4749	.8983	.3217	.1684
371	.6647	.0881	.5115	.9348	.3582	.7816	.2050	.6283	.0517	.4751	.8984	.3218	.1686
374	.6648	.0882	.5116	.9350	.3583	.7817	.2051	.6285	.0518	.4752	.8986	.3220	.1687
377	.6649	.0883	.5117	.9351	.3585	.7818	.2052	.6286	.0520	.4753	.8987	.3221	.1689
423380	15.6651	16.0884	16.5118	16.9352	17.3586	17.7820	18.2053	18.6287	19.0521	19.4755	19.8989	20.3222	21.1690
383	.6652	.0886	.5119	.9353	.3587	.7821	.2055	.6289	.0522	.4756	.8990	.3224	.1692
386	.6653	.0887	.5121	.9354	.3588	.7822	.2056	.6290	.0524	.4758	.8991	.3225	.1693
389	.6654	.0888	.5122	.9356	.3589	.7823	.2057	.6291	.0525	.4759	.8993	.3227	.1695
392	.6655	.0889	.5123	.9357	.3591	.7825	.2059	.6292	.0526	.4760	.8994	.3228	.1696
423395	15.6656	16.0890	16.5124	16.9358	17.3592	17.7826	18.2060	18.6294	19.0528	19.4762	19.8996	20.3230	21.1698
398	.6657	.0891	.5125	.9359	.3593	.7827	.2061	.6295	.0529	.4763	.8997	.3231	.1699
401	.6658	.0892	.5126	.9360	.3594	.7828	.2062	.6296	.0530	.4764	.8998	.3232	.1701
404	.6659	.0894	.5128	.9362	.3596	.7830	.2064	.6298	.0532	.4766	.9000	.3234	.1702
407	.6661	.0895	.5129	.9363	.3597	.7831	.2065	.6299	.0533	.4767	.9001	.3235	.1704
423410	15.6662	16.0896	16.5130	16.9364	17.3598	17.7832	18.2066	18.6300	19.0535	19.4769	19.9003	20.3237	21.1705
413	.6663	.0897	.5131	.9365	.3599	.7833	.2068	.6302	.0536	.4770	.9004	.3238	.1707
416	.6664	.0898	.5132	.9366	.3601	.7835	.2069	.6303	.0537	.4771	.9006	.3240	.1708
419	.6665	.0899	.5133	.9368	.3602	.7836	.2070	.6304	.0539	.4773	.9007	.3241	.1710
422	.6666	.0900	.5135	.9369	.3603	.7837	.2071	.6306	.0540	.4774	.9008	.3243	.1711
423425	15.6667	16.0902	16.5136	16.9370	17.3604	17.7839	18.2073	18.6307	19.0541	19.4776	19.9010	20.3244	21.1713
428	.6668	.0903	.5137	.9371	.3605	.7840	.2074	.6308	.0543	.4777	.9011	.3245	.1714
431	.6669	.0904	.5138	.9372	.3607	.7841	.2075	.6310	.0544	.4778	.9013	.3247	.1716
434	.6671	.0905	.5139	.9374	.3608	.7842	.2077	.6311	.0545	.4780	.9014	.3248	.1717
437	.6672	.0906	.5140	.9375	.3609	.7844	.2078	.6312	.0547	.4781	.9015	.3250	.1719
423440	15.6673	16.0907	16.5142	16.9376	17.3610	17.7845	18.2079	18.6314	19.0548	19.4782	19.9017	20.3251	21.1720
443	.6674	.0908	.5143	.9377	.3612	.7846	.2080	.6315	.0549	.4784	.9018	.3253	.1722
446	.6675	.0909	.5144	.9378	.3613	.7847	.2082	.6316	.0551	.4785	.9020	.3254	.1723
449	.6676	.0911	.5145	.9380	.3614	.7849	.2083	.6318	.0552	.4787	.9021	.3256	.1725
452	.6677	.0912	.5146	.9381	.3615	.7850	.2084	.6319	.0553	.4788	.9022	.3257	.1726
423455	15.6678	16.0913	16.5147	16.9382	17.3617	17.7851	18.2086	18.6320	19.0555	19.4789	19.9024	20.3258	21.1728
458	.6679	.0914	.5149	.9383	.3618	.7852	.2087	.6322	.0556	.4791	.9025	.3260	.1729
461	.6681	.0915	.5150	.9384	.3619	.7854	.2088	.6323	.0557	.4792	.9027	.3261	.1731
464	.6682	.0916	.5151	.9386	.3620	.7855	.2090	.6324	.0559	.4793	.9028	.3263	.1732
467	.6683	.0917	.5152	.9387	.3621	.7856	.2091	.6325	.0560	.4795	.9029	.3264	.1734
423470	15.6684	16.0919	16.5153	16.9388	17.3623	17.7857	18.2092	18.6327	19.0562	19.4796	19.9031	20.3266	21.1735
473	.6685	.0920	.5154	.9389	.3624	.7859	.2093	.6328	.0563	.4798	.9032	.3267	.1737
476	.6686	.0921	.5156	.9390	.3625	.7860	.2095	.6329	.0564	.4799	.9034	.3268	.1738
479	.6687	.0922	.5157	.9392	.3626	.7861	.2096	.6331	.0566	.4800	.9035	.3270	.1740
482	.6688	.0923	.5158	.9393	.3628	.7862	.2097	.6332	.0567	.4802	.9037	.3271	.1741
423485	15.6689	16.0924	16.5159	16.9394	17.3629	17.7864	18.2099	18.6333	19.0568	19.4803	19.9038	20.3273	21.1743
488	.6691	.0925	.5160	.9395	.3630	.7865	.2100	.6335	.0570	.4804	.9039	.3274	.1744
491	.6692	.0927	.5161	.9396	.3631	.7866	.2101	.6336	.0571	.4806	.9041	.3276	.1746
494	.6693	.0928	.5163	.9398	.3633	.7867	.2102	.6337	.0572	.4807	.9042	.3277	.1747
497	.6694	.0929	.5164	.9399	.3634	.7869	.2103	.6339	.0574	.4809	.9044	.3279	.1749
423500	15.6695	16.0930	16.5165	16.9400	17.3635	17.7870	18.2105	18.6340	19.0575	19.4810	19.9045	20.3280	21.1750

MEGACYCLES PER SECOND

HARMONICS

BASIC FREQ.	24	25	26	27	28	29	30	31	32	33	34	35	36
423500	10.1640	10.5875	11.0110	11.4345	11.8580	12.2815	12.7050	13.1285	13.5520	13.9755	14.3990	14.8225	15.2460
503	.1641	.5876	.0111	.4346	.8581	.2816	.7051	.1286	.5521	.9756	.3991	.8226	.2461
506	.1641	.5877	.0112	.4347	.8582	.2817	.7052	.1287	.5522	.9757	.3992	.8227	.2462
509	.1642	.5877	.0112	.4347	.8583	.2818	.7053	.1288	.5523	.9758	.3993	.8228	.2463
512	.1643	.5878	.0113	.4348	.8583	.2818	.7054	.1289	.5524	.9759	.3994	.8229	.2464
423515	10.1644	10.5879	11.0114	11.4349	11.8584	12.2819	12.7055	13.1290	13.5525	13.9760	14.3995	14.8230	15.2465
518	.1644	.5880	.0115	.4350	.8585	.2820	.7055	.1291	.5526	.9761	.3996	.8231	.2466
521	.1645	.5880	.0115	.4351	.8586	.2821	.7056	.1292	.5527	.9762	.3997	.8232	.2468
524	.1646	.5881	.0116	.4351	.8587	.2822	.7057	.1292	.5528	.9763	.3998	.8233	.2469
525	.1646	.5882	.0117	.4352	.8588	.2823	.7058	.1293	.5529	.9764	.3999	.8234	.2470
423530	10.1647	10.5883	11.0118	11.4353	11.8588	12.2824	12.7059	13.1294	13.5530	13.9765	14.4000	14.8236	15.2471
533	.1648	.5883	.0119	.4354	.8589	.2825	.7060	.1295	.5531	.9766	.4001	.8237	.2472
536	.1649	.5884	.0119	.4355	.8590	.2825	.7061	.1296	.5532	.9767	.4002	.8238	.2473
539	.1649	.5885	.0120	.4356	.8591	.2826	.7062	.1297	.5532	.9768	.4003	.8239	.2474
542	.1650	.5886	.0121	.4356	.8592	.2827	.7063	.1298	.5533	.9769	.4004	.8240	.2475
423545	10.1651	10.5886	11.0122	11.4357	11.8593	12.2828	12.7064	13.1299	13.5534	13.9770	14.4005	14.8241	15.2476
548	.1652	.5887	.0122	.4358	.8593	.2829	.7064	.1300	.5535	.9771	.4006	.8242	.2477
551	.1652	.5888	.0123	.4359	.8594	.2830	.7065	.1301	.5536	.9772	.4007	.8243	.2478
554	.1653	.5889	.0124	.4360	.8595	.2831	.7066	.1302	.5537	.9773	.4008	.8244	.2479
557	.1654	.5889	.0125	.4360	.8596	.2832	.7067	.1303	.5538	.9774	.4009	.8245	.2481
423560	10.1654	10.5890	11.0126	11.4361	11.8597	12.2832	12.7068	13.1304	13.5539	13.9775	14.4010	14.8246	15.2482
563	.1655	.5891	.0126	.4362	.8598	.2833	.7069	.1305	.5540	.9776	.4011	.8247	.2483
566	.1656	.5892	.0127	.4363	.8598	.2834	.7070	.1305	.5541	.9777	.4012	.8248	.2484
569	.1657	.5892	.0128	.4364	.8599	.2835	.7071	.1306	.5542	.9778	.4013	.8249	.2485
572	.1657	.5893	.0129	.4364	.8600	.2836	.7072	.1307	.5543	.9779	.4014	.8250	.2486
423575	10.1658	10.5894	11.0130	11.4365	11.8601	12.2837	12.7073	13.1308	13.5544	13.9780	14.4016	14.8251	15.2487
578	.1659	.5895	.0130	.4366	.8602	.2838	.7073	.1309	.5545	.9781	.4017	.8252	.2488
581	.1659	.5895	.0131	.4367	.8603	.2838	.7074	.1310	.5546	.9782	.4018	.8253	.2489
584	.1660	.5896	.0132	.4368	.8604	.2839	.7075	.1311	.5547	.9783	.4019	.8254	.2490
587	.1661	.5897	.0133	.4368	.8604	.2840	.7076	.1312	.5548	.9784	.4020	.8255	.2491
423590	10.1662	10.5898	11.0133	11.4369	11.8605	12.2841	12.7077	13.1313	13.5549	13.9785	14.4021	14.8257	15.2492
593	.1662	.5898	.0134	.4370	.8606	.2842	.7078	.1314	.5550	.9786	.4022	.8258	.2493
596	.1663	.5899	.0135	.4371	.8607	.2843	.7079	.1315	.5551	.9787	.4023	.8259	.2495
599	.1664	.5900	.0136	.4372	.8608	.2844	.7080	.1316	.5552	.9788	.4024	.8260	.2496
602	.1664	.5901	.0137	.4373	.8609	.2845	.7081	.1317	.5553	.9789	.4025	.8261	.2497
423605	10.1665	10.5901	11.0137	11.4373	11.8609	12.2845	12.7082	13.1318	13.5554	13.9790	14.4026	14.8262	15.2498
608	.1666	.5902	.0138	.4374	.8610	.2846	.7082	.1318	.5555	.9791	.4027	.8263	.2499
611	.1667	.5903	.0139	.4375	.8611	.2847	.7083	.1319	.5556	.9792	.4028	.8264	.2500
614	.1667	.5904	.0140	.4376	.8612	.2848	.7084	.1320	.5556	.9793	.4029	.8265	.2501
617	.1668	.5904	.0140	.4377	.8613	.2849	.7085	.1321	.5557	.9794	.4030	.8266	.2502
423620	10.1669	10.5905	11.0141	11.4377	11.8614	12.2850	12.7086	13.1322	13.5558	13.9795	14.4031	14.8267	15.2503
623	.1670	.5906	.0142	.4378	.8614	.2851	.7087	.1323	.5559	.9796	.4032	.8268	.2504
626	.1670	.5907	.0143	.4379	.8615	.2852	.7088	.1324	.5560	.9797	.4033	.8269	.2505
629	.1671	.5907	.0144	.4380	.8616	.2852	.7089	.1325	.5561	.9798	.4034	.8270	.2506
632	.1672	.5908	.0144	.4381	.8617	.2853	.7090	.1326	.5562	.9799	.4035	.8271	.2508
423635	10.1672	10.5909	11.0145	11.4381	11.8618	12.2854	12.7091	13.1327	13.5563	13.9800	14.4036	14.8272	15.2509
638	.1673	.5910	.0146	.4382	.8619	.2855	.7091	.1328	.5564	.9801	.4037	.8273	.2510
641	.1674	.5910	.0147	.4383	.8619	.2856	.7092	.1329	.5565	.9802	.4038	.8274	.2511
644	.1675	.5911	.0147	.4384	.8620	.2857	.7093	.1330	.5566	.9803	.4039	.8275	.2512
647	.1675	.5912	.0148	.4385	.8621	.2858	.7094	.1331	.5567	.9804	.4040	.8276	.2513
423650	10.1676	10.5913	11.0149	11.4386	11.8622	12.2859	12.7095	13.1332	13.5568	13.9805	14.4041	14.8278	15.2514
653	.1677	.5913	.0150	.4386	.8623	.2859	.7096	.1332	.5569	.9805	.4042	.8279	.2515
656	.1677	.5914	.0151	.4387	.8624	.2860	.7097	.1333	.5570	.9806	.4043	.8280	.2516
659	.1678	.5915	.0151	.4388	.8625	.2861	.7098	.1334	.5571	.9807	.4044	.8281	.2517
662	.1679	.5916	.0152	.4389	.8625	.2862	.7099	.1335	.5572	.9808	.4045	.8282	.2518
423665	10.1680	10.5916	11.0153	11.4390	11.8626	12.2863	12.7100	13.1336	13.5573	13.9809	14.4046	14.8283	15.2519
668	.1680	.5917	.0154	.4390	.8627	.2864	.7100	.1337	.5574	.9810	.4047	.8284	.2520
671	.1681	.5918	.0154	.4391	.8628	.2865	.7101	.1338	.5575	.9811	.4048	.8285	.2522
674	.1682	.5919	.0155	.4392	.8629	.2865	.7102	.1339	.5576	.9812	.4049	.8286	.2523
677	.1682	.5919	.0156	.4393	.8630	.2866	.7103	.1340	.5577	.9813	.4050	.8287	.2524
423680	10.1683	10.5920	11.0157	11.4394	11.8630	12.2867	12.7104	13.1341	13.5578	13.9814	14.4051	14.8288	15.2525
683	.1684	.5921	.0158	.4394	.8631	.2868	.7105	.1342	.5579	.9815	.4052	.8289	.2526
686	.1685	.5922	.0158	.4395	.8632	.2869	.7106	.1343	.5580	.9816	.4053	.8290	.2527
689	.1685	.5922	.0159	.4396	.8633	.2870	.7107	.1344	.5580	.9817	.4054	.8291	.2528
692	.1686	.5923	.0160	.4397	.8634	.2871	.7108	.1345	.5581	.9818	.4055	.8292	.2529
423695	10.1687	10.5924	11.0161	11.4398	11.8635	12.2872	12.7109	13.1345	13.5582	13.9819	14.4056	14.8293	15.2530
698	.1688	.5925	.0161	.4398	.8635	.2872	.7109	.1346	.5583	.9820	.4057	.8294	.2531
701	.1688	.5925	.0162	.4399	.8636	.2873	.7110	.1347	.5584	.9821	.4058	.8295	.2532
704	.1689	.5926	.0163	.4400	.8637	.2874	.7111	.1348	.5585	.9822	.4059	.8296	.2533
707	.1690	.5927	.0164	.4401	.8638	.2875	.7112	.1349	.5586	.9823	.4060	.8297	.2535
423710	10.1690	10.5928	11.0165	11.4402	11.8639	12.2876	12.7113	13.1350	13.5587	13.9824	14.4061	14.8299	15.2536
713	.1691	.5928	.0165	.4403	.8640	.2877	.7114	.1351	.5588	.9825	.4062	.8300	.2537
716	.1692	.5929	.0166	.4403	.8640	.2878	.7115	.1352	.5589	.9826	.4063	.8301	.2538
719	.1693	.5930	.0167	.4404	.8641	.2879	.7116	.1353	.5590	.9827	.4064	.8302	.2539
722	.1693	.5931	.0168	.4405	.8642	.2879	.7117	.1354	.5591	.9828	.4065	.8303	.2540
423725	10.1694	10.5931	11.0169	11.4406	11.8643	12.2880	12.7118	13.1355	13.5592	13.9829	14.4067	14.8304	15.2541
728	.1695	.5932	.0169	.4407	.8644	.2881	.7118	.1356	.5593	.9830	.4068	.8305	.2542
731	.1695	.5933	.0170	.4407	.8645	.2882	.7119	.1357	.5594	.9831	.4069	.8306	.2543
734	.1696	.5934	.0171	.4408	.8646	.2883	.7120	.1358	.5595	.9832	.4070	.8307	.2544
737	.1697	.5934	.0172	.4409	.8646	.2884	.7121	.1358	.5596	.9833	.4071	.8308	.2545
423740	10.1698	10.5935	11.0172	11.4410	11.8647	12.2885	12.7122	13.1359	13.5597	13.9834	14.4072	14.8309	15.2546
743	.1698	.5936	.0173	.4411	.8648	.2885	.7123	.1360	.5598	.9835	.4073	.8310	.2547
746	.1699	.5937	.0174	.4411	.8649	.2886	.7124	.1361	.5599	.9836	.4074	.8311	.2549
749	.1700	.5937	.0175	.4412	.8650	.2887	.7125	.1362	.5600	.9837	.4075	.8312	.2550
752	.1700	.5938	.0176	.4413	.8651	.2888	.7126	.1363	.5601	.9838	.4076	.8313	.2551
423755	10.1701	10.5939	11.0176	11.4414	11.8651	12.2889	12.7127	13.1364	13.5602	13.9839	14.4077	14.8314	15.2552
758	.1702	.5940	.0177	.4415	.8652	.2890	.7127	.1365	.5603	.9840	.4078	.8315	.2553
761	.1703	.5940	.0178	.4415	.8653	.2891	.7128	.1366	.5604	.9841	.4079	.8316	.2554
764	.1703	.5941	.0179	.4416	.8654	.2892	.7129	.1367	.5604	.9842	.4080	.8317	.2555
767	.1704	.5942	.0179	.4417	.8655	.2892	.7130	.1368	.5605	.9843	.4081	.8318	.2556
423770	10.1705	10.5943	11.0180	11.4418	11.8656	12.2893	12.7131	13.1369	13.5606	13.9844	14.4082	14.8320	15.2557
773	.1706	.5943	.0181	.4419	.8656	.2894	.7132	.1370	.5607	.9845	.4083	.8321	.2558
776	.1706	.5944	.0182	.4420	.8657	.2895	.7133	.1371	.5608	.9846	.4084	.8322	.2559
779	.1707	.5945	.0183	.4420	.8658	.2896	.7134	.1371	.5609	.9847	.4085	.8323	.2560
782	.1708	.5946	.0183	.4421	.8659	.2897	.7135	.1372	.5610	.9848	.4086	.8324	.2562
423785	10.1708	10.5946	11.0184	11.4422	11.8660	12.2898	12.7136	13.1373	13.5611	13.9849	14.4087	14.8325	15.2563
788	.1709	.5947	.0185	.4423	.8661	.2899	.7136	.1374	.5612	.9850	.4088	.8326	.2564
791	.1710	.5948	.0186	.4424	.8661	.2899	.7137	.1375	.5613	.9851	.4089	.8327	.2565
794	.1711	.5949	.0186	.4424	.8662	.2900	.7138	.1376	.5614	.9852	.4090	.8328	.2566
797	.1711	.5949	.0187	.4425	.8663	.2901	.7139	.1377	.5615	.9853	.4091	.8329	.2567
423800	10.1712	10.5950	11.0188	11.4426	11.8664	12.2902	12.7140	13.1378	13.5616	13.9854	14.4092	14.8330	15.2568

MEGACYCLES PER SECOND

H A R M O N I C S

BASIC FREQ.	37	38	39	40	41	42	43	44	45	46	47	48	50
423500	15.6695	16.0930	16.5165	16.9400	17.3635	17.7870	18.2105	18.6340	19.0575	19.4810	19.9045	20.3280	21.1750
503	.6696	.0931	.5166	.9401	.3636	.7871	.2106	.6341	.0576	.4811	.9046	.3281	.1752
506	.6697	.0932	.5167	.9402	.3637	.7873	.2108	.6343	.0578	.4813	.9048	.3283	.1753
509	.6698	.0933	.5169	.9404	.3639	.7874	.2109	.6344	.0579	.4814	.9049	.3284	.1755
512	.6699	.0935	.5170	.9405	.3640	.7875	.2110	.6345	.0580	.4816	.9051	.3286	.1756
423515	15.6701	16.0936	16.5171	16.9406	17.3641	17.7876	18.2111	18.6347	19.0582	19.4817	19.9052	20.3287	21.1758
518	.6702	.0937	.5172	.9407	.3642	.7878	.2113	.6348	.0583	.4818	.9053	.3289	.1759
521	.6703	.0938	.5173	.9408	.3644	.7879	.2114	.6349	.0584	.4820	.9055	.3290	.1761
524	.6704	.0939	.5174	.9410	.3645	.7880	.2115	.6351	.0586	.4821	.9056	.3292	.1762
527	.6705	.0940	.5176	.9411	.3646	.7881	.2117	.6352	.0587	.4822	.9058	.3293	.1764
423530	15.6706	16.0941	16.5177	16.9412	17.3647	17.7883	18.2118	18.6353	19.0589	19.4824	19.9059	20.3294	21.1765
533	.6707	.0943	.5178	.9413	.3649	.7884	.2119	.6355	.0590	.4825	.9061	.3296	.1767
536	.6708	.0944	.5179	.9414	.3650	.7885	.2120	.6356	.0591	.4827	.9062	.3297	.1768
539	.6709	.0945	.5180	.9416	.3651	.7886	.2122	.6357	.0593	.4828	.9063	.3299	.1770
542	.6711	.0946	.5181	.9417	.3652	.7888	.2123	.6358	.0594	.4829	.9065	.3300	.1771
423545	15.6712	16.0947	16.5183	16.9418	17.3653	17.7889	18.2124	18.6360	19.0595	19.4831	19.9066	20.3302	21.1773
548	.6713	.0948	.5184	.9419	.3655	.7890	.2126	.6361	.0597	.4832	.9068	.3303	.1774
551	.6714	.0949	.5185	.9420	.3656	.7891	.2127	.6362	.0598	.4833	.9069	.3304	.1776
554	.6715	.0951	.5186	.9422	.3657	.7893	.2128	.6364	.0599	.4835	.9070	.3306	.1777
557	.6716	.0952	.5187	.9423	.3658	.7894	.2130	.6365	.0601	.4836	.9072	.3307	.1779
423560	15.6717	16.0953	16.5188	16.9424	17.3660	17.7895	18.2131	18.6366	19.0602	19.4838	19.9073	20.3309	21.1780
563	.6718	.0954	.5190	.9425	.3661	.7896	.2132	.6368	.0603	.4839	.9075	.3310	.1782
566	.6719	.0955	.5191	.9426	.3662	.7898	.2133	.6369	.0605	.4840	.9076	.3312	.1783
569	.6721	.0956	.5192	.9428	.3663	.7899	.2135	.6370	.0606	.4842	.9077	.3313	.1785
572	.6722	.0957	.5193	.9429	.3665	.7900	.2136	.6372	.0607	.4843	.9079	.3315	.1786
423575	15.6723	16.0959	16.5194	16.9430	17.3666	17.7902	18.2137	18.6373	19.0609	19.4845	19.9080	20.3316	21.1788
578	.6724	.0960	.5195	.9431	.3667	.7903	.2139	.6374	.0610	.4846	.9082	.3317	.1789
581	.6725	.0961	.5197	.9432	.3668	.7904	.2140	.6376	.0611	.4847	.9083	.3319	.1791
584	.6726	.0962	.5198	.9434	.3669	.7905	.2141	.6377	.0613	.4849	.9084	.3320	.1792
587	.6727	.0963	.5199	.9435	.3671	.7907	.2142	.6378	.0614	.4850	.9086	.3322	.1794
423590	15.6728	16.0964	16.5200	16.9436	17.3672	17.7908	18.2144	18.6380	19.0616	19.4851	19.9087	20.3323	21.1795
593	.6729	.0965	.5201	.9437	.3673	.7909	.2145	.6381	.0617	.4853	.9089	.3325	.1797
596	.6731	.0966	.5202	.9438	.3674	.7910	.2146	.6382	.0618	.4854	.9090	.3326	.1798
599	.6732	.0968	.5204	.9440	.3676	.7912	.2148	.6384	.0620	.4856	.9092	.3328	.1800
602	.6733	.0969	.5205	.9441	.3677	.7913	.2149	.6385	.0621	.4857	.9093	.3329	.1801
423605	15.6734	16.0970	16.5206	16.9442	17.3678	17.7914	18.2150	18.6386	19.0622	19.4858	19.9094	20.3330	21.1803
608	.6735	.0971	.5207	.9443	.3679	.7915	.2151	.6388	.0624	.4860	.9096	.3332	.1804
611	.6736	.0972	.5208	.9444	.3681	.7917	.2153	.6389	.0625	.4861	.9097	.3333	.1806
614	.6737	.0973	.5209	.9446	.3682	.7918	.2154	.6390	.0626	.4862	.9099	.3335	.1807
617	.6738	.0974	.5211	.9447	.3683	.7919	.2155	.6391	.0628	.4864	.9100	.3336	.1809
423620	15.6739	16.0976	16.5212	16.9448	17.3684	17.7920	18.2157	18.6393	19.0629	19.4865	19.9101	20.3338	21.1810
623	.6741	.0977	.5213	.9449	.3685	.7922	.2158	.6394	.0630	.4867	.9103	.3339	.1812
626	.6742	.0978	.5214	.9450	.3687	.7923	.2159	.6395	.0632	.4868	.9104	.3340	.1813
629	.6743	.0979	.5215	.9452	.3688	.7924	.2160	.6397	.0633	.4869	.9106	.3342	.1815
632	.6744	.0980	.5216	.9453	.3689	.7925	.2162	.6398	.0634	.4871	.9107	.3343	.1816
423635	15.6745	16.0981	16.5218	16.9454	17.3690	17.7927	18.2163	18.6399	19.0636	19.4872	19.9108	20.3345	21.1818
638	.6746	.0982	.5219	.9455	.3692	.7928	.2164	.6401	.0637	.4873	.9110	.3346	.1819
641	.6747	.0984	.5220	.9456	.3693	.7929	.2166	.6402	.0638	.4875	.9111	.3348	.1821
644	.6748	.0985	.5221	.9458	.3694	.7930	.2167	.6403	.0640	.4876	.9113	.3349	.1822
647	.6749	.0986	.5222	.9459	.3695	.7932	.2168	.6405	.0641	.4878	.9114	.3351	.1824
423650	15.6751	16.0987	16.5224	16.9460	17.3697	17.7933	18.2170	18.6406	19.0643	19.4879	19.9116	20.3352	21.1825
653	.6752	.0988	.5225	.9461	.3698	.7934	.2171	.6407	.0644	.4880	.9117	.3353	.1827
656	.6753	.0989	.5226	.9462	.3699	.7936	.2172	.6409	.0645	.4882	.9118	.3355	.1828
659	.6754	.0990	.5227	.9464	.3700	.7937	.2173	.6410	.0647	.4883	.9120	.3356	.1830
662	.6755	.0992	.5228	.9465	.3701	.7938	.2175	.6411	.0648	.4885	.9121	.3358	.1831
423665	15.6756	16.0993	16.5229	16.9466	17.3703	17.7939	18.2176	18.6413	19.0649	19.4886	19.9123	20.3359	21.1833
668	.6757	.0994	.5231	.9467	.3704	.7941	.2177	.6414	.0651	.4887	.9124	.3361	.1834
671	.6758	.0995	.5232	.9468	.3705	.7942	.2179	.6415	.0652	.4889	.9125	.3362	.1836
674	.6759	.0996	.5233	.9470	.3706	.7943	.2180	.6417	.0653	.4890	.9127	.3364	.1837
677	.6760	.0997	.5234	.9471	.3708	.7944	.2181	.6418	.0655	.4891	.9128	.3365	.1839
423680	15.6762	16.0998	16.5235	16.9472	17.3709	17.7946	18.2182	18.6419	19.0656	19.4893	19.9130	20.3366	21.1840
683	.6763	.1000	.5236	.9473	.3710	.7947	.2184	.6421	.0657	.4894	.9131	.3368	.1842
686	.6764	.1001	.5238	.9474	.3711	.7948	.2185	.6422	.0659	.4896	.9132	.3369	.1843
689	.6765	.1002	.5239	.9476	.3712	.7949	.2186	.6423	.0660	.4897	.9134	.3371	.1845
692	.6766	.1003	.5240	.9477	.3714	.7951	.2188	.6424	.0661	.4898	.9135	.3372	.1846
423695	15.6767	16.1004	16.5241	16.9478	17.3715	17.7952	18.2189	18.6426	19.0663	19.4900	19.9137	20.3374	21.1848
698	.6768	.1005	.5242	.9479	.3716	.7953	.2190	.6427	.0664	.4901	.9138	.3375	.1849
701	.6769	.1006	.5243	.9480	.3717	.7954	.2191	.6428	.0665	.4902	.9139	.3376	.1851
704	.6770	.1008	.5245	.9482	.3719	.7956	.2193	.6430	.0667	.4904	.9141	.3378	.1852
707	.6772	.1009	.5246	.9483	.3720	.7957	.2194	.6431	.0668	.4905	.9142	.3379	.1854
423710	15.6773	16.1010	16.5247	16.9484	17.3721	17.7958	18.2195	18.6432	19.0670	19.4907	19.9144	20.3381	21.1855
713	.6774	.1011	.5248	.9485	.3722	.7959	.2197	.6434	.0671	.4908	.9145	.3382	.1857
716	.6775	.1012	.5249	.9486	.3724	.7961	.2198	.6435	.0672	.4909	.9147	.3384	.1858
719	.6776	.1013	.5250	.9488	.3725	.7962	.2199	.6436	.0674	.4911	.9148	.3385	.1860
722	.6777	.1014	.5252	.9489	.3726	.7963	.2200	.6438	.0675	.4912	.9149	.3387	.1861
423725	15.6778	16.1016	16.5253	16.9490	17.3727	17.7965	18.2202	18.6439	19.0676	19.4914	19.9151	20.3388	21.1863
728	.6779	.1017	.5254	.9491	.3728	.7966	.2203	.6440	.0678	.4915	.9152	.3389	.1864
731	.6780	.1018	.5255	.9492	.3730	.7967	.2204	.6442	.0679	.4916	.9154	.3391	.1866
734	.6782	.1019	.5256	.9494	.3731	.7968	.2206	.6443	.0680	.4918	.9155	.3392	.1867
737	.6783	.1020	.5257	.9495	.3732	.7970	.2207	.6444	.0682	.4919	.9156	.3394	.1869
423740	15.6784	16.1021	16.5259	16.9496	17.3733	17.7971	18.2208	18.6446	19.0683	19.4920	19.9158	20.3395	21.1870
743	.6785	.1022	.5260	.9497	.3735	.7972	.2209	.6447	.0684	.4922	.9159	.3397	.1872
746	.6786	.1023	.5261	.9498	.3736	.7973	.2211	.6448	.0686	.4923	.9161	.3398	.1873
749	.6787	.1025	.5262	.9500	.3737	.7975	.2212	.6450	.0687	.4925	.9162	.3400	.1875
752	.6788	.1026	.5263	.9501	.3738	.7976	.2213	.6451	.0688	.4926	.9163	.3401	.1876
423755	15.6789	16.1027	16.5264	16.9502	17.3740	17.7977	18.2215	18.6452	19.0690	19.4927	19.9165	20.3402	21.1878
758	.6790	.1028	.5266	.9503	.3741	.7978	.2216	.6454	.0691	.4929	.9166	.3404	.1879
761	.6792	.1029	.5267	.9504	.3742	.7980	.2217	.6455	.0692	.4930	.9168	.3405	.1881
764	.6793	.1030	.5268	.9506	.3743	.7981	.2219	.6456	.0694	.4931	.9169	.3407	.1882
767	.6794	.1031	.5269	.9507	.3744	.7982	.2220	.6457	.0695	.4933	.9170	.3408	.1884
423770	15.6795	16.1033	16.5270	16.9508	17.3746	17.7983	18.2221	18.6459	19.0697	19.4934	19.9172	20.3410	21.1885
773	.6796	.1034	.5271	.9509	.3747	.7985	.2222	.6460	.0698	.4936	.9173	.3411	.1887
776	.6797	.1035	.5273	.9510	.3748	.7986	.2224	.6461	.0699	.4937	.9175	.3412	.1888
779	.6798	.1036	.5274	.9512	.3749	.7987	.2225	.6463	.0701	.4938	.9176	.3414	.1890
782	.6799	.1037	.5275	.9513	.3751	.7988	.2226	.6464	.0702	.4940	.9178	.3415	.1891
423785	15.6800	16.1038	16.5276	16.9514	17.3752	17.7990	18.2228	18.6465	19.0703	19.4941	19.9179	20.3417	21.1893
788	.6802	.1039	.5277	.9515	.3753	.7991	.2229	.6467	.0705	.4942	.9180	.3418	.1894
791	.6803	.1041	.5278	.9516	.3754	.7992	.2230	.6468	.0706	.4944	.9182	.3420	.1896
794	.6804	.1042	.5280	.9518	.3756	.7993	.2231	.6469	.0707	.4945	.9183	.3421	.1897
797	.6805	.1043	.5281	.9519	.3757	.7995	.2233	.6471	.0709	.4947	.9185	.3423	.1899
423800	15.6806	16.1044	16.5282	16.9520	17.3758	17.7996	18.2234	18.6472	19.0710	19.4948	19.9186	20.3424	21.1900

MEGACYCLES PER SECOND

H A R M O N I C S

BASIC FREQ.	24	25	26	27	28	29	30	31	32	33	34	35	36
423800	10.1712	10.5950	11.0188	11.4426	11.8664	12.2902	12.7140	13.1378	13.5616	13.9854	14.4092	14.8330	15.2568
803	.1713	.5951	.0189	.4427	.8665	.2903	.7141	.1379	.5617	.9855	.4093	.8331	.2569
806	.1713	.5952	.0190	.4428	.8666	.2904	.7142	.1380	.5618	.9856	.4094	.8332	.2570
809	.1714	.5952	.0190	.4428	.8667	.2905	.7143	.1381	.5619	.9857	.4095	.8333	.2571
812	.1715	.5953	.0191	.4429	.8667	.2905	.7144	.1382	.5620	.9858	.4096	.8334	.2572
423815	10.1716	10.5954	11.0192	11.4430	11.8668	12.2906	12.7145	13.1383	13.5621	13.9859	14.4097	14.8335	15.2573
818	.1716	.5955	.0193	.4431	.8669	.2907	.7145	.1384	.5622	.9860	.4098	.8336	.2574
821	.1717	.5955	.0193	.4432	.8670	.2908	.7146	.1385	.5623	.9861	.4099	.8337	.2576
824	.1718	.5956	.0194	.4432	.8671	.2909	.7147	.1385	.5624	.9862	.4100	.8338	.2577
827	.1718	.5957	.0195	.4433	.8672	.2910	.7148	.1386	.5625	.9863	.4101	.8339	.2578
423830	10.1719	10.5958	11.0196	11.4434	11.8672	12.2911	12.7149	13.1387	13.5626	13.9864	14.4102	14.8341	15.2579
833	.1720	.5958	.0197	.4435	.8673	.2912	.7150	.1388	.5627	.9865	.4103	.8342	.2580
836	.1721	.5959	.0197	.4436	.8674	.2912	.7151	.1389	.5628	.9866	.4104	.8343	.2581
839	.1721	.5960	.0198	.4437	.8675	.2913	.7152	.1390	.5628	.9867	.4105	.8344	.2582
842	.1722	.5961	.0199	.4437	.8676	.2914	.7153	.1391	.5629	.9868	.4106	.8345	.2583
423845	10.1723	10.5961	11.0200	11.4438	11.8677	12.2915	12.7154	13.1392	13.5630	13.9869	14.4107	14.8346	15.2584
848	.1724	.5962	.0200	.4439	.8677	.2916	.7154	.1393	.5631	.9870	.4108	.8347	.2585
851	.1724	.5963	.0201	.4440	.8678	.2917	.7155	.1394	.5632	.9871	.4109	.8348	.2586
854	.1725	.5964	.0202	.4441	.8679	.2918	.7156	.1395	.5633	.9872	.4110	.8349	.2587
857	.1726	.5964	.0203	.4441	.8680	.2919	.7157	.1396	.5634	.9873	.4111	.8350	.2589
423860	10.1726	10.5965	11.0204	11.4442	11.8681	12.2919	12.7158	13.1397	13.5635	13.9874	14.4112	14.8351	15.2590
863	.1727	.5966	.0204	.4443	.8682	.2920	.7159	.1398	.5636	.9875	.4113	.8352	.2591
866	.1728	.5967	.0205	.4444	.8682	.2921	.7160	.1398	.5637	.9876	.4114	.8353	.2592
869	.1729	.5967	.0206	.4445	.8683	.2922	.7161	.1399	.5638	.9877	.4115	.8354	.2593
872	.1729	.5968	.0207	.4445	.8684	.2923	.7162	.1400	.5639	.9878	.4116	.8355	.2594
423875	10.1730	10.5969	11.0208	11.4446	11.8685	12.2924	12.7163	13.1401	13.5640	13.9879	14.4118	14.8356	15.2595
878	.1731	.5970	.0208	.4447	.8686	.2925	.7163	.1402	.5641	.9880	.4119	.8357	.2596
881	.1731	.5970	.0209	.4448	.8687	.2925	.7164	.1403	.5642	.9881	.4120	.8358	.2597
884	.1732	.5971	.0210	.4449	.8688	.2926	.7165	.1404	.5643	.9882	.4121	.8359	.2598
887	.1733	.5972	.0211	.4449	.8688	.2927	.7166	.1405	.5644	.9883	.4122	.8360	.2599
423890	10.1734	10.5973	11.0211	11.4450	11.8689	12.2928	12.7167	13.1406	13.5645	13.9884	14.4123	14.8362	15.2600
893	.1734	.5973	.0212	.4451	.8690	.2929	.7168	.1407	.5646	.9885	.4124	.8363	.2601
896	.1735	.5974	.0213	.4452	.8691	.2930	.7169	.1408	.5647	.9886	.4125	.8364	.2603
899	.1736	.5975	.0214	.4453	.8692	.2931	.7170	.1409	.5648	.9887	.4126	.8365	.2604
902	.1736	.5976	.0215	.4454	.8693	.2932	.7171	.1410	.5649	.9888	.4127	.8366	.2605
423905	10.1737	10.5976	11.0215	11.4454	11.8693	12.2932	12.7172	13.1411	13.5650	13.9889	14.4128	14.8367	15.2606
908	.1738	.5977	.0216	.4455	.8694	.2933	.7172	.1411	.5651	.9890	.4129	.8368	.2607
911	.1739	.5978	.0217	.4456	.8695	.2934	.7173	.1412	.5652	.9891	.4130	.8369	.2608
914	.1739	.5979	.0218	.4457	.8696	.2935	.7174	.1413	.5652	.9892	.4131	.8370	.2609
917	.1740	.5979	.0218	.4458	.8697	.2936	.7175	.1414	.5653	.9893	.4132	.8371	.2610
423920	10.1741	10.5980	11.0219	11.4458	11.8698	12.2937	12.7176	13.1415	13.5654	13.9894	14.4133	14.8372	15.2611
923	.1742	.5981	.0220	.4459	.8698	.2938	.7177	.1416	.5655	.9895	.4134	.8373	.2612
926	.1742	.5982	.0221	.4460	.8699	.2939	.7178	.1417	.5656	.9896	.4135	.8374	.2613
929	.1743	.5982	.0222	.4461	.8700	.2939	.7179	.1418	.5657	.9897	.4136	.8375	.2614
932	.1744	.5983	.0222	.4462	.8701	.2940	.7180	.1419	.5658	.9898	.4137	.8376	.2616
423935	10.1744	10.5984	11.0223	11.4462	11.8702	12.2941	12.7181	13.1420	13.5659	13.9899	14.4138	14.8377	15.2617
938	.1745	.5985	.0224	.4463	.8703	.2942	.7181	.1421	.5660	.9900	.4139	.8378	.2618
941	.1746	.5985	.0225	.4464	.8703	.2943	.7182	.1422	.5661	.9901	.4140	.8379	.2619
944	.1747	.5986	.0225	.4465	.8704	.2944	.7183	.1423	.5662	.9902	.4141	.8380	.2620
947	.1747	.5987	.0226	.4466	.8705	.2945	.7184	.1424	.5663	.9903	.4142	.8381	.2621
423950	10.1748	10.5988	11.0227	11.4467	11.8706	12.2946	12.7185	13.1425	13.5664	13.9904	14.4143	14.8383	15.2622
953	.1749	.5988	.0228	.4467	.8707	.2946	.7186	.1425	.5665	.9904	.4144	.8384	.2623
956	.1749	.5989	.0229	.4468	.8708	.2947	.7187	.1426	.5666	.9905	.4145	.8385	.2624
959	.1750	.5990	.0229	.4469	.8709	.2948	.7188	.1427	.5667	.9906	.4146	.8386	.2625
962	.1751	.5991	.0230	.4470	.8709	.2949	.7189	.1428	.5668	.9907	.4147	.8387	.2626
423965	10.1752	10.5991	11.0231	11.4471	11.8710	12.2950	12.7190	13.1429	13.5669	13.9908	14.4148	14.8388	15.2627
968	.1752	.5992	.0232	.4471	.8711	.2951	.7190	.1430	.5670	.9909	.4149	.8389	.2628
971	.1753	.5993	.0232	.4472	.8712	.2952	.7191	.1431	.5671	.9910	.4150	.8390	.2630
974	.1754	.5994	.0233	.4473	.8713	.2952	.7192	.1432	.5672	.9911	.4151	.8391	.2631
977	.1754	.5994	.0234	.4474	.8714	.2953	.7193	.1433	.5673	.9912	.4152	.8392	.2632
443980	10.1755	10.5995	11.0235	11.4475	11.8714	12.2954	12.7194	13.1434	13.5674	13.9913	14.4153	14.8393	15.2633
983	.1756	.5996	.0236	.4475	.8715	.2955	.7195	.1435	.5675	.9914	.4154	.8394	.2634
986	.1757	.5997	.0236	.4476	.8716	.2956	.7196	.1436	.5676	.9915	.4155	.8395	.2635
989	.1757	.5997	.0237	.4477	.8717	.2957	.7197	.1437	.5676	.9916	.4156	.8396	.2636
992	.1758	.5998	.0238	.4478	.8718	.2958	.7198	.1438	.5677	.9917	.4157	.8397	.2637
423995	10.1759	10.5999	11.0239	11.4479	11.8719	12.2959	12.7199	13.1438	13.5678	13.9918	14.4158	14.8398	15.2638
998	.1760	.6000	.0239	.4479	.8719	.2959	.7199	.1439	.5679	.9919	.4159	.8399	.2639
424001	.1760	.6000	.0240	.4480	.8720	.2960	.7200	.1440	.5680	.9920	.4160	.8400	.2640
004	.1761	.6001	.0241	.4481	.8721	.2961	.7201	.1441	.5681	.9921	.4161	.8401	.2641
007	.1762	.6002	.0242	.4482	.8722	.2962	.7202	.1442	.5682	.9922	.4162	.8402	.2643
424010	10.1762	10.6003	11.0243	11.4483	11.8723	12.2963	12.7203	13.1443	13.5683	.139923	14.4163	14.8404	15.2644
013	.1763	.6003	.0243	.4484	.8724	.2964	.7204	.1444	.5684	.9924	.4164	.8405	.2645
016	.1764	.6004	.0244	.4484	.8724	.2965	.7205	.1445	.5685	.9925	.4165	.8406	.2646
019	.1765	.6005	.0245	.4485	.8725	.2966	.7206	.1446	.5686	.9926	.4166	.8407	.2647
022	.1765	.6006	.0246	.4486	.8726	.2966	.7207	.1447	.5687	.9927	.4167	.8408	.2648
424025	10.1766	10.6006	11.0247	11.4487	11.8727	12.2967	12.7208	13.1448	13.5688	13.9928	14.4169	14.8409	15.2649
028	.1767	.6007	.0247	.4488	.8728	.2968	.7208	.1449	.5689	.9929	.4170	.8410	.2650
031	.1767	.6008	.0248	.4488	.8729	.2969	.7209	.1450	.5690	.9930	.4171	.8411	.2651
034	.1768	.6009	.0249	.4489	.8730	.2970	.7210	.1451	.5691	.9931	.4172	.8412	.2652
037	.1769	.6009	.0250	.4490	.8730	.2971	.7211	.1451	.5692	.9932	.4173	.8413	.2653
424040	10.1770	10.6010	11.0250	11.4491	11.8731	12.2972	12.7212	13.1452	13.5693	13.9933	14.4174	14.8414	15.2654
043	.1770	.6011	.0251	.4492	.8732	.2972	.7213	.1453	.5694	.9934	.4175	.8415	.2655
046	.1771	.6012	.0252	.4492	.8733	.9973	.7214	.1454	.5695	.9935	.4176	.8416	.2657
049	.1772	.6012	.0253	.4493	.8734	.2974	.7215	.1455	.5696	.9936	.4177	.8417	.2658
052	.1772	.6013	.0254	.4494	.8735	.2975	.7216	.1456	.5697	.9937	.4178	.8418	.2659
424055	10.1773	10.6014	11.0254	11.4495	11.8735	12.2976	12.7217	13.1457	13.5698	13.9938	14.4179	14.8419	15.2660
058	.1774	.6015	.0255	.4496	.8736	.2977	.7217	.1458	.5699	.9939	.4180	.8420	.2661
061	.1775	.6015	.0256	.4496	.8737	.2978	.7218	.1459	.5700	.9940	.4181	.8421	.2662
064	.1775	.6016	.0257	.4497	.8738	.2979	.7219	.1460	.5700	.9941	.4182	.8422	.2663
067	.1776	.6017	.0257	.4498	.8739	.2979	.7220	.1461	.5701	.9942	.4183	.8423	.2664
424070	10.1777	10.6018	11.0258	11.4499	11.8740	12.2980	12.7221	13.1462	13.5702	13.9943	14.4184	14.8425	15.2665
073	.1778	.6018	.0259	.4500	.8740	.2981	.7222	.1463	.5703	.9944	.4185	.8426	.2666
076	.1778	.6019	.0260	.4501	.8741	.2982	.7223	.1464	.5704	.9945	.4186	.8427	.2667
079	.1779	.6020	.0261	.4501	.8742	.2983	.7224	.1464	.5705	.9946	.4187	.8428	.2668
082	.1780	.6021	.0261	.4502	.8743	.2984	.7225	.1465	.5706	.9947	.4188	.8429	.2670
424085	10.1780	10.6021	11.0262	11.4503	11.8744	12.2985	12.7226	13.1466	13.5707	13.9948	14.4189	14.8430	15.2671
088	.1781	.6022	.0263	.4504	.8745	.2986	.7226	.1467	.5708	.9949	.4190	.8431	.2672
091	.1782	.6023	.0264	.4505	.8745	.2986	.7227	.1468	.5709	.9950	.4191	.8432	.2673
094	.1783	.6024	.0264	.4505	.8746	.2987	.7228	.1469	.5710	.9951	.4192	.8433	.2674
097	.1783	.6024	.0265	.4506	.8747	.2988	.7229	.1470	.5711	.9952	.4193	.8434	.2675
424100	10.1784	10.6025	11.0266	11.4507	11.8748	12.2989	12.7230	13.1471	13.5712	13.9953	14.4194	14.8435	15.2676

MEGACYCLES PER SECOND

H A R M O N I C S

BASIC FREQ.	37	38	39	40	41	42	43	44	45	46	47	48	50
423800	15.6806	16.1044	16.5282	16.9520	17.3758	17.7996	18.2234	18.6472	19.0710	19.4948	19.9186	20.3424	21.1900
803	.6807	.1045	.5283	.9521	.3759	.7997	.2235	.6473	.0711	.4949	.9187	.3425	.1902
806	.6808	.1046	.5284	.9522	.3760	.7999	.2237	.6475	.0713	.4951	.9189	.3427	.1903
809	.6809	.1047	.5286	.9524	.3762	.8000	.2238	.6476	.0714	.4952	.9190	.3428	.1905
812	.6810	.1049	.5287	.9525	.3763	.8001	.2239	.6477	.0715	.4954	.9192	.3430	.1906
423815	15.6812	16.1050	16.5288	16.9526	17.3764	17.8002	18.2240	18.6479	19.0717	19.4955	19.9193	20.3431	21.1908
818	.6813	.1051	.5289	.9527	.3765	.8004	.2242	.6480	.0718	.4956	.9194	.3433	.1909
821	.6814	.1052	.5290	.9528	.3767	.8005	.2243	.6481	.0719	.4958	.9196	.3434	.1911
824	.6815	.1053	.5291	.9530	.3768	.8006	.2244	.6483	.0721	.4959	.9197	.3436	.1912
827	.6816	.1054	.5293	.9531	.3769	.8007	.2246	.6484	.0722	.4960	.9199	.3437	.1914
423830	15.6817	16.1055	16.5294	16.9532	17.3770	17.8009	18.2247	18.6485	19.0724	19.4962	19.9200	20.3438	21.1915
833	.6818	.1057	.5295	.9533	.3772	.8010	.2248	.6487	.0725	.4963	.9202	.3440	.1917
836	.6819	.1058	.5296	.9534	.3773	.8011	.2249	.6488	.0726	.4965	.9203	.3441	.1918
839	.6820	.1059	.5297	.9536	.3774	.8012	.2251	.6489	.0728	.4966	.9204	.3443	.1920
842	.6822	.1060	.5298	.9537	.3775	.8014	.2252	.6490	.0729	.4967	.9206	.3444	.1921
423845	15.6823	16.1061	16.5300	16.9538	17.3776	17.8015	18.2253	18.6492	19.0730	19.4969	19.9207	20.3446	21.1923
848	.6824	.1062	.5301	.9539	.3778	.8016	.2255	.6493	.0732	.4970	.9209	.3447	.1924
851	.6825	.1063	.5302	.9540	.3779	.8017	.2256	.6494	.0733	.4971	.9210	.3448	.1926
854	.6826	.1065	.5303	.9542	.3780	.8019	.2257	.6496	.0734	.4973	.9211	.3450	.1927
857	.6827	.1066	.5304	.9543	.3781	.8020	.2259	.6497	.0736	.4974	.9213	.3451	.1929
423860	15.6828	16.1067	16.5305	16.9544	17.3783	17.8021	18.2260	18.6498	19.0737	19.4976	19.9214	20.3453	21.1930
863	.6829	.1068	.5307	.9545	.3784	.8022	.2261	.6500	.0738	.4977	.9216	.3454	.1932
866	.6830	.1069	.5308	.9546	.3785	.8024	.2262	.6501	.0740	.4978	.9217	.3456	.1933
869	.6832	.1070	.5309	.9548	.3786	.8025	.2264	.6502	.0741	.4980	.9218	.3457	.1935
872	.6833	.1071	.5310	.9549	.3788	.8026	.2265	.6504	.0742	.4981	.9220	.3459	.1936
423875	15.6834	16.1073	16.5311	16.9550	17.3789	17.8028	18.2266	18.6505	19.0744	19.4983	19.9221	20.3460	21.1938
878	.6835	.1074	.5312	.9551	.3790	.8029	.2268	.6506	.0745	.4984	.9223	.3461	.1939
881	.6836	.1075	.5314	.9552	.3791	.8030	.2269	.6508	.0746	.4985	.9224	.3463	.1941
884	.6837	.1076	.5315	.9554	.3792	.8031	.2270	.6509	.0748	.4987	.9225	.3464	.1942
887	.6838	.1077	.5316	.9555	.3794	.8033	.2271	.6510	.0749	.4988	.9227	.3466	.1944
423890	15.6839	16.1078	16.5317	16.9556	17.3795	17.8034	18.2273	18:6512	19.0751	19.4989	19.9228	20.3467	21.1945
893	.6840	.1079	.5318	.9557	.3796	.8035	.2274	.6513	.0752	.4991	.9230	.3469	.1947
896	.6842	.1080	.5319	.9558	.3797	.8036	.2275	.6514	.0753	.4992	.9231	.3470	.1948
899	.6843	.1082	.5321	.9560	.3799	.8038	.2277	.6516	.0755	.4994	.9233	.3472	.1950
902	.6844	.1083	.5322	.9561	.3800	.8039	.2278	.6517	.0756	.4995	.9234	.3473	.1951
423905	15.6845	16.1084	16.5323	16.9562	17.3801	17.8040	18.2279	18.6518	19.0757	19.4996	19.9235	20.3474	21.1953
908	.6846	.1085	.5324	.9563	.3802	.8041	.2280	.6520	.0759	.4998	.9237	.3476	.1954
911	.6847	.1086	.5325	.9564	.3804	.8043	.2282	.6521	.0760	.4999	.9238	.3477	.1956
914	.6848	.1087	.5326	.9566	.3805	.8044	.2283	.6522	.0761	.5000	.9240	.3479	.1957
917	.6849	.1088	.5328	.9567	.3806	.8045	.2284	.6523	.0763	.5002	.9241	.3480	.1959
423920	15.6850	16.1090	16.5329	16.9568	17.3807	17.8046	18.2286	18.6525	19.0764	19.5003	19.9242	20.3482	21.1960
923	.6852	.1091	.5330	.9569	.3808	.8048	.2287	.6526	.0765	.5005	.9244	.3483	.1962
926	.6853	.1092	.5331	.9570	.3810	.8049	.2288	.6527	.0767	.5006	.9245	.3484	.1963
929	.6854	.1093	.5332	.9572	.3811	.8050	.2289	.6529	.0768	.5007	.9247	.3486	.1965
932	.6855	.1094	.5333	.9573	.3812	.8051	.2291	.6530	.0769	.5009	.9248	.3487	.1966
423935	15.6856	16.1095	16.5335	16.9574	17.3813	17.8053	18.2292	18.6531	19.0771	19.5010	19.9249	20.3489	21.1968
938	.6857	.1096	.5336	.9575	.3815	.8054	.2293	.6533	.0772	.5011	.9251	.3490	.1969
941	.6858	.1098	.5337	.9576	.3816	.8055	.2295	.6534	.0773	.5013	.9252	.3492	.1971
944	.6859	.1099	.5338	.9578	.3817	.8056	.2296	.6535	.0775	.5014	.9254	.3493	.1972
947	.6860	.1100	.5339	.9579	.3818	.8058	.2297	.6537	.0776	.5016	.9255	.3495	.1974
423950	15.6862	16.1101	16.5341	16.9580	17.3820	17.8059	18.2299	18.6538	19.0778	19.5017	19.9257	20.3496	21.1975
953	.6863	.1102	.5342	.9581	.3821	.8060	.2300	.6539	.0779	.5018	.9258	.3497	.1977
956	.6864	.1103	.5343	.9582	.3822	.8062	.2301	.6541	.0780	.5020	.9259	.3499	.1978
959	.6865	.1104	.5344	.9584	.3823	.8063	.2302	.6542	.0782	.5021	.9261	.3500	.1980
962	.6866	.1106	.5345	.9585	.3824	.8064	.2304	.6543	.0783	.5023	.9262	.3502	.1981
423965	15.6867	16.1107	16.5346	16.9586	17.3826	17.8065	18.2305	18.6545	19.0784	19.5024	19.9264	20.3503	21.1983
968	.6868	.1108	.5348	.9587	.3827	.8067	.2306	.6546	.0786	.5025	.9265	.3505	.1984
971	.6869	.1109	.5349	.9588	.3828	.8068	.2308	.6547	.0787	.5027	.9266	.3506	.1986
974	.6870	.1110	.5350	.9590	.3829	.8069	.2309	.6549	.0788	.5028	.9268	.3508	.1987
977	.6871	.1111	.5351	.9591	.3831	.8070	.2310	.6550	.0790	.5029	.9269	.3509	.1989
423980	15.6873	16.1112	16.5352	16.9592	17.3832	17.8072	18.2311	18.6551	19.0791	19.5031	19.9271	20.3510	21.1990
983	.6874	.1114	.5353	.9593	.3833	.8073	.2313	.6553	.0792	.5032	.9272	.3512	.1992
986	.6875	.1115	.5355	.9594	.3834	.8074	.2314	.6554	.0794	.5034	.9273	.3513	.1993
989	.6876	.1116	.5356	.9596	.3835	.8075	.2315	.6555	.0795	.5035	.9275	.3515	.1995
992	.6877	.1117	.5357	.9597	.3837	.8077	.2317	.6556	.0796	.5036	.9276	.3516	.1996
423995	15.6878	16.1118	16.5358	16.9598	17.3838	17.8078	18.2318	18.6558	19.0798	19.5038	19.9278	20.3518	21.1998
998	.6879	.1119	.5359	.9599	.3839	.8079	.2319	.6559	.0799	.5039	.9279	.3519	.1999
424001	.6880	.1120	.5360	.9600	.3840	.8080	.2320	.6560	.0800	.5040	.9280	.3520	.2001
004	.6881	.1122	.5362	.9602	.3842	.8082	.2322	.6562	.0802	.5042	.9282	.3522	.2002
007	.6883	.1123	.5363	.9603	.3843	.8083	.2323	.6563	.0803	.5043	.9283	.3523	.2004
424010	15.6884	16.1124	16.5364	16.9604	17.3844	17.8084	18.2324	18.6564	19.0805	19.5045	19.9285	20.3525	21.2005
013	.6885	.1125	.5365	.9605	.3845	.8085	.2326	.6566	.0806	.5046	.9286	.3526	.2007
016	.6886	.1126	.5366	.9606	.3847	.8087	.2327	.6567	.0807	.5047	.9288	.3528	.2008
019	.6887	.1127	.5367	.9608	.3848	.8088	.2328	.6568	.0809	.5049	.9289	.3529	.2010
022	.6888	.1128	.5369	.9609	.3849	.8089	.2329	.6570	.0810	.5050	.9290	.3531	.2011
424025	15.6889	16.1130	16.5370	16.9610	17.3850	17.8091	18.2331	18.6571	19.0811	19.5052	19.9292	20.3532	21.2013
028	.6890	.1131	.5371	.9611	.3851	.8092	.2332	.6572	.0813	.5053	.9293	.3533	.2014
031	.6891	.1132	.5372	.9612	.3853	.8093	.2333	.6574	.0814	.5054	.9295	.3535	.2016
034	.6893	.1133	.5373	.9614	.3854	.8094	.2335	.6575	.0815	.5056	.9296	.3536	.2017
037	.6894	.1134	.5374	.9615	.3855	.8096	.2336	.6576	.0817	.5057	.9297	.3538	.2019
424040	15.6895	16.1135	16.5376	16.9616	17.3856	17.8097	18.2337	18.6578	19.0818	19.5058	19.9299	20.3539	21.2020
043	.6896	.1136	.5377	.9617	.3858	.8098	.2338	.6579	.0819	.5060	.9300	.3541	.2022
046	.6897	.1137	.5378	.9618	.3859	.8099	.2340	.6580	.0821	.5061	.9302	.3542	.2023
049	.6898	.1139	.5379	.9620	.3860	.8101	.2341	.6582	.0822	.5063	.9303	.3544	.2025
052	.6899	.1140	.5380	.9621	.3861	.8102	.2342	.6583	.0823	.5064	.9304	.3545	.2026
424055	15.6900	16.1141	16.5381	16.9622	17.3863	17.8103	18.2344	18.6584	19.0825	19.5065	19.9306	20.3546	21.2028
058	.6901	.1142	.5383	.9623	.3864	.8104	.2345	.6586	.0826	.5067	.9307	.3548	.2029
061	.6903	.1143	.5384	.9624	.3865	.8106	.2346	.6587	.0827	.5068	.9309	.3549	.2031
064	.6904	.1144	.5385	.9626	.3866	.8107	.2348	.6588	.0829	.5069	.9310	.3551	.2032
067	.6905	.1145	.5386	.9627	.3867	.8108	.2349	.6589	.0830	.5071	.9311	.3552	.2034
424070	15.6906	16.1147	16.5387	16.9628	17.3869	17.8109	18.2350	18.6591	19.0832	19.5072	19.9313	20.3554	21.2035
073	.6907	.1148	.5388	.9629	.3870	.8111	.2351	.6592	.0833	.5074	.9314	.3555	.2037
076	.6908	.1149	.5390	.9630	.3871	.8112	.2353	.6593	.0834	.5075	.9316	.3556	.2038
079	.6909	.1150	.5391	.9632	.3872	.8113	.2354	.6595	.0836	.5076	.9317	.3558	.2040
082	.6910	.1151	.5392	.9633	.3874	.8114	.2355	.6596	.0837	.5078	.9319	.3559	.2041
424085	15.6911	16.1152	16.5393	16.9634	17.3875	17.8116	18.2357	18.6597	19.0838	19.5079	19.9320	20.3561	21.2043
088	.6913	.1153	.5394	.9635	.3876	.8117	.2358	.6599	.0840	.5080	.9321	.3562	.2044
091	.6914	.1155	.5395	.9636	.3877	.8118	.2359	.6600	.0841	.5082	.9323	.3564	.2046
094	.6915	.1156	.5397	.9638	.3879	.8119	.2360	.6601	.0842	.5083	.9324	.3565	.2047
097	.6916	.1157	.5398	.9639	.3880	.8121	.2362	.6603	.0844	.5085	.9326	.3567	.2049
424100	15.6917	16.1158	16.5399	16.9640	17.3881	17.8122	18.2363	18.6604	19.0845	19.5086	19.9327	20.3568	21.2050

MEGACYCLES PER SECOND

H A R M O N I C S

BASIC FREQ.	24	25	26	27	28	29	30	31	32	33	34	35	36
424100	10.1784	10.6025	11.0266	11.4507	11.8748	12.2989	12.7230	13.1471	13.5712	13.9953	14.4194	14.8435	15.2676
103	.1785	.6026	.0267	.4508	.8749	.2990	.7231	.1472	.5713	.9954	.4195	.8436	.2677
106	.1785	.6027	.0268	.4509	.8750	.2991	.7232	.1473	.5714	.9955	.4196	.8437	.2678
109	.1786	.6027	.0268	.4509	.8751	.2992	.7233	.1474	.5715	.9956	.4197	.8438	.2679
112	.1787	.6028	.0269	.4510	.8751	.2992	.7234	.1475	.5716	.9957	.4198	.8439	.2680
424115	10.1788	10.6029	11.0270	11.4111	11.8752	12.2993	12.7235	13.1476	13.9917	13.9958	14.4199	14.8440	15.2681
118	.1788	.6030	.0271	.4512	.8753	.2994	.7235	.1477	.5718	.9959	.4200	.8441	.2682
121	.1789	.6030	.0271	.4513	.8754	.2995	.7236	.1478	.5719	.9960	.4201	.8442	.2684
124	.1790	.6031	.0272	.4513	.8755	.2996	.7237	.1478	.5720	.9961	.4202	.8443	.2685
127	.1790	.6032	.0273	.4514	.8756	.2997	.7238	.1479	.5721	.9962	.4203	.8444	.2686
424130	10.1791	10.6033	11.0274	11.4515	11.8756	12.2998	12.7239	13.1480	13.5722	13.9963	14.4204	14.8446	15.2687
133	.1792	.6033	.0275	.4516	.8757	.2999	.7240	.1481	.5723	.9964	.4205	.8447	.2688
136	.1793	.6034	.0275	.4517	.8757	.2999	.7241	.1482	.5724	.9965	.4206	.8448	.2689
139	.1793	.6035	.0276	.4518	.8759	.3000	.7242	.1483	.5724	.9966	.4207	.8449	.2690
142	.1794	.6036	.0277	.4518	.8760	.3001	.7243	.1484	.5725	.9967	.4208	.8450	.2691
424145	10.1795	10.6036	11.0278	11.4519	11.8761	12.3002	12.7244	13.1485	13.5726	13.9968	14.4209	14.8451	15.2692
148	.1796	.6037	.0278	.4520	.8761	.3003	.7244	.1486	.5727	.9969	.4210	.8452	.2693
151	.1796	.6038	.0279	.4521	.8762	.3004	.7245	.1487	.5728	.9970	.4211	.8453	.2694
154	.1797	.6039	.0280	.4522	.8763	.3005	.7246	.1488	.5729	.9971	.4212	.8454	.2695
157	.1798	.6039	.0281	.4522	.8764	.3006	.7247	.1489	.5730	.9972	.4213	.8455	.2697
424160	10.1798	10.6040	11.0282	11.4523	11.8765	12.3006	12.7248	13.1490	13.5731	13.9973	14.4214	14.8456	15.2698
163	.1799	.6041	.0282	.4524	.8766	.3007	.7249	.1491	.5732	.9974	.4215	.8457	.2699
166	.1800	.6042	.0283	.4525	.8766	.3008	.7250	.1491	.5733	.9975	.4216	.8458	.2700
169	.1801	.6042	.0284	.4526	.8767	.3009	.7251	.1492	.5734	.9976	.4217	.8459	.2701
172	.1801	.6043	.0285	.4526	.8768	.3010	.7252	.1493	.5735	.9977	.4218	.8460	.2702
424175	10.1802	10.6044	11.0286	11.4527	11.8769	12.3011	12.7253	13.1494	13.5736	13.9978	14.4220	14.8461	15.2703
178	.1803	.6045	.0286	.4528	.8770	.3012	.7253	.1495	.5737	.9979	.4221	.8462	.2704
181	.1803	.6045	.0287	.4529	.8771	.3012	.7254	.1496	.5738	.9980	.4222	.8463	.2705
184	.1804	.6046	.0288	.4530	.8772	.3013	.7255	.1497	.5739	.8891	.4223	.8464	.2706
187	.1805	.6047	.0289	.4530	.8772	.3014	.7256	.1498	.5740	.9982	.4224	.8465	.2707
424190	10.1806	10.6048	11.0289	11.4531	11.8773	12.3015	12.7257	13.1499	13.5741	13.9983	14.4225	14.8467	15.2708
193	.1806	.6048	.0290	.4532	.8774	.3016	.7258	.1500	.5742	.9984	.4226	.8468	.2709
196	.1807	.6049	.0291	.4533	.8775	.3017	.7259	.1501	.5743	.9985	.4227	.8469	.2711
199	.1808	.6050	.0292	.4534	.8776	.3018	.7260	.1502	.5744	.9986	.4228	.8470	.2712
202	.1808	.6051	.0293	.4535	.8777	.3019	.7261	.1503	.5745	.9987	.4229	.8471	.2713
424205	10.1809	10.6051	11.0293	11.4535	11.8777	12.3019	12.7262	13.1504	13.5746	13.9988	14.4230	14.8472	15.2714
208	.1810	.6052	.0294	.4536	.8778	.3020	.7262	.1504	.5747	.9989	.4231	.8473	.2715
211	.1811	.6053	.0295	.4537	.8779	.3021	.7263	.1505	.5748	.9990	.4232	.8474	.2716
214	.1811	.6054	.0296	.4538	.8780	.3022	.7264	.1506	.5748	.9991	.4233	.8475	.2717
217	.1812	.6054	.0296	.4539	.8781	.3023	.7265	.1507	.5749	.9992	.4234	.8476	.2718
424220	10.1813	10.6055	11.0297	11.4539	11.8782	12.3024	12.7266	13.1508	13.5750	13.9993	14.4235	14.8477	15.2719
223	.1814	.6056	.0298	.4540	.8782	.3025	.7267	.1509	.5751	.9994	.4236	.8478	.2720
226	.1814	.6057	.0299	.4541	.8783	.3026	.7268	.1510	.5752	.9995	.4237	.8479	.2721
229	.1815	.6057	.0300	.4542	.8784	.3026	.7269	.1511	.5753	.9996	.4238	.8480	.2722
232	.1816	.6058	.0300	.4543	.8785	.3027	.7270	.1512	.5754	.9997	.4239	.8481	.2724
424235	10.1816	10.6059	11.0301	11.4543	11.8786	12.3028	12.7271	13.1513	13.5755	13.9998	14.4240	14.8482	15.2725
238	.1817	.6060	.0302	.4544	.8787	.3029	.7271	.1514	.5756	.9999	.4241	.8483	.2726
241	.1818	.6060	.0303	.4545	.8787	.3030	.7272	.1515	.5757	14.0000	.4242	.8484	.2727
244	.1819	.6061	.0303	.4546	.8788	.3031	.7273	.1516	.5758	.0001	.4243	.8485	.2728
247	.1819	.6062	.0304	.4547	.8789	.3032	.7274	.1517	.5759	.0002	.4244	.8486	.2729
424250	10.1820	10.6063	11.0305	11.4548	11.8790	12.3033	12.7275	13.1518	13.5760	14.0003	14.4245	14.8488	15.2730
253	.1821	.6063	.0306	.4548	.8791	.3033	.7276	.1518	.5761	.0003	.4246	.8499	.2731
256	.1821	.6064	.0307	.4549	.8792	.3034	.7277	.1519	.5762	.0004	.4247	.8490	.2732
259	.1822	.6065	.0307	.4550	.8793	.3035	.7278	.1520	.5763	.0005	.4248	.8491	.2733
262	.1823	.6066	.0308	.4551	.8793	.3036	.7279	.1521	.5764	.0006	.4249	.8492	.2734
424265	10.1824	10.6066	11.0309	11.4552	11.8794	12.3037	12.7280	13.1522	13.5765	14.0007	14.4250	14.8493	15.2735
268	.1824	.6067	.0310	.4552	.8795	.3038	.7280	.1523	.5766	.0008	.4251	.8494	.2736
271	.1825	.6068	.0310	.4553	.8796	.3039	.7281	.1524	.5767	.0009	.4252	.8495	.2738
274	.1826	.6069	.0311	.4544	.8797	.3039	.7282	.1525	.5768	.0010	.4253	.8496	.2739
277	.1826	.6069	.0312	.4555	.8798	.3040	.7283	.1526	.5769	.0011	.4254	.8497	.2740
424280	10.1827	10.6070	11.0313	11.4556	11.8798	12.3041	12.7284	13.1527	13.5770	14.0012	14.4255	14.8498	15.2741
283	.1828	.6071	.0314	.4556	.8799	.3042	.7285	.1528	.5771	.0013	.4256	.8499	.2742
286	.1829	.6072	.0314	.4557	.8800	.3043	.7286	.1529	.5772	.0014	.4257	.8500	.2743
289	.1829	.6072	.0315	.4558	.8801	.3044	.7287	.1530	.5772	.0015	.4258	.8501	.2744
292	.1830	.6073	.0316	.4559	.8802	.3045	.7288	.1531	.5773	.0016	.4259	.8502	.2745
424295	10.1831	10.6074	11.0317	11.4560	11.8803	12.3046	12.7289	13.1531	13.5774	14.0017	14.4260	14.8503	15.2746
298	.1832	.6075	.0317	.4560	.8803	.3046	.7289	.1532	.5775	.0018	.4261	.8504	.2747
301	.1832	.6075	.0318	.4561	.8804	.3047	.7290	.1533	.5776	.0019	.4262	.8505	.2748
304	.1833	.6076	.0319	.4562	.8805	.3048	.7291	.1534	.5777	.0020	.4263	.8506	.2749
307	.1834	.6077	.0320	.4563	.8806	.3049	.7292	.1535	.5778	.0021	.4264	.8507	.2751
424310	10.1834	10.6078	11.0321	11.4564	11.8807	12.3050	12.7293	13.1536	13.5779	14.0022	14.4265	14.8509	15.2752
313	.1835	.6078	.0321	.4565	.8808	.3051	.7294	.1537	.5780	.0023	.4266	.8510	.2753
316	.1836	.6079	.0322	.4565	.8808	.3052	.7295	.1538	.5781	.0024	.4267	.8511	.2754
319	.1837	.6080	.0323	.4566	.8809	.3053	.7296	.1539	.5782	.0025	.4268	.8512	.2755
322	.1837	.6081	.0324	.4567	.8810	.3053	.7297	.1540	.5783	.0026	.4269	.8513	.2756
424325	10.1838	10.6081	11.0325	11.4568	11.8811	12.3054	12.7298	13.1541	13.5784	14.0027	14.4271	14.8514	15.2757
328	.1839	.6082	.0325	.4569	.8812	.3055	.7298	.1542	.5785	.0028	.4272	.8515	.2758
331	.1839	.6083	.0326	.4569	.8813	.3056	.7299	.1543	.5786	.0029	.4273	.8516	.2759
334	.1840	.6084	.0327	.4570	.8814	.3057	.7300	.1544	.5787	.0030	.4274	.8517	.2760
337	.1841	.6084	.0328	.4571	.8814	.3058	.7301	.1544	.5788	.0031	.4275	.8518	.2761
424340	10.1842	10.6085	11.0328	11.4572	11.8815	12.3059	12.7302	13.1545	13.5789	14.0032	14.4276	14.8519	15.2762
343	.1842	.6086	.0329	.4573	.8816	.3059	.7303	.1546	.5790	.0033	.4277	.8520	.2763
346	.1843	.6087	.0330	.4573	.8817	.3060	.7304	.1547	.5791	.0034	.4278	.8521	.2765
349	.1844	.6087	.0331	.4574	.8818	.3061	.7305	.1548	.5792	.0035	.4279	.8522	.2766
352	.1844	.6088	.0332	.4575	.8819	.3062	.7306	.1549	.5793	.0036	.4280	.8523	.2767
424355	10.1845	10.6089	11.0332	11.4576	11.8819	12.3063	12.7307	13.1550	13.5794	14.0037	14.4281	14.8524	15.2768
358	.1846	.6090	.0333	.4577	.8820	.3064	.7307	.1551	.5795	.0038	.4282	.8525	.2769
361	.1847	.6090	.0334	.4577	.8821	.3065	.7308	.1552	.5796	.0039	.4283	.8526	.2770
364	.1847	.6091	.0335	.4578	.8822	.3066	.7309	.1553	.5796	.0040	.4284	.8527	.2771
367	.1848	.6092	.0335	.4579	.8823	.3066	.7310	.1554	.5797	.0041	.4285	.8528	.2772
424370	10.1849	10.6093	11.0336	11.4580	11.8824	12.3067	12.7311	13.1555	13.5798	14.0042	14.4286	14.8430	15.2773
373	.1850	.6093	.0337	.4581	.8824	.3068	.7312	.1556	.5799	.0043	.4287	.8531	.2774
376	.1850	.6094	.0338	.4582	.8825	.3069	.7313	.1557	.5800	.0044	.4288	.8532	.2775
379	.1851	.6095	.0339	.4582	.8826	.3070	.7314	.1557	.5801	.0045	.4289	.8533	.2776
382	.1852	.6096	.0339	.4583	.8827	.3071	.7315	.1558	.5802	.0046	.4290	.8534	.2778
424385	10.1852	10.6096	11.0340	11.4584	11.8828	12.3072	12.7316	13.1559	13.5803	14.0047	14.4291	14.8535	15.2779
388	.1853	.6097	.0341	.4585	.8829	.3073	.7316	.1560	.5804	.0048	.4292	.8536	.2780
391	.1854	.6098	.0342	.4586	.8829	.3073	.7317	.1561	.5805	.0049	.4293	.8537	.2781
394	.1855	.6099	.0342	.4586	.8830	.3074	.7318	.1562	.5806	.0050	.4294	.8538	.2782
397	.1855	.6099	.0343	.4587	.8831	.3075	.7319	.1563	.5807	.0051	.4295	.8539	.2783
424400	10.1856	10.6100	11.0344	11.4588	11.8832	12.3076	12.7320	13.1564	13.5808	14.0052	14.4296	14.8540	15.2784

MEGACYCLES PER SECOND

HARMONICS

BASIC FREQ.	37	38	39	40	41	42	43	44	45	46	47	48	50
424100	15.6917	16.1158	16.5399	16.9640	17.3881	17.8122	18.2363	18.6604	19.0845	19.5086	19.9327	20.3568	21.2050
103	.6918	.1159	.5400	.9641	.3882	.8123	.2364	.6605	.0846	.5087	.9328	.3569	.2052
106	.6919	.1160	.5401	.9642	.3883	.8125	.2366	.6607	.0848	.5089	.9330	.3571	.2053
109	.6920	.1161	.5403	.9644	.3885	.8126	.2367	.6608	.0849	.5090	.9331	.3572	.2055
112	.6921	.1163	.5404	.9645	.3886	.8127	.2368	.6609	.0850	.5092	.9333	.3574	.2056
424115	15.6923	16.1164	16.5405	16.9646	17.3887	17.8128	18.2369	18.6611	19.0852	19.5093	19.9334	20.3575	21.2058
118	.6924	.1165	.5406	.9647	.3888	.8130	.2371	.6612	.0853	.5094	.9335	.3577	.2059
121	.6925	.1166	.5407	.9648	.3890	.8131	.2372	.6613	.0854	.5096	.9337	.3578	.2061
124	.6926	.1167	.5408	.9650	.3891	.8132	.2373	.6615	.0856	.5097	.9338	.3580	.2062
127	.6927	.1168	.5410	.9651	.3892	.8133	.2375	.6616	.0857	.5098	.9340	.3581	.2064
424130	15.6928	16.1169	16.5411	16.9652	17.3893	17.8135	18.2376	18.6617	19.0859	19.5100	19.9341	20.3582	21.2065
133	.6929	.1171	.5412	.9653	.3895	.8136	.2377	.6619	.0860	.5101	.9343	.3584	.2067
136	.6930	.1172	.5413	.9654	.3896	.8137	.2378	.6620	.0861	.5103	.9344	.3585	.2068
139	.6931	.1173	.5414	.9656	.3897	.8138	.2380	.6621	.0863	.5104	.9345	.3587	.2070
142	.6933	.1174	.5415	.9657	.3898	.8140	.2381	.6622	.0864	.5105	.9347	.3588	.2071
424145	15.6934	16.1175	16.5417	16.9658	17.3899	17.8141	18.2382	18.6624	19.0865	19.5107	19.9348	20.3590	21.2073
148	.6935	.1176	.5418	.9659	.3901	.8142	.2384	.6625	.0867	.5108	.9350	.3591	.2074
151	.6936	.1177	.5419	.9660	.3902	.8143	.2385	.6626	.0868	.5109	.9351	.3592	.2076
154	.6937	.1179	.5420	.9662	.3903	.8145	.2386	.6628	.0869	.5111	.9352	.3594	.2077
157	.6938	.1180	.5421	.9663	.3904	.8146	.2388	.6629	.0871	.5112	.9354	.3595	.2079
424160	15.6939	16.1181	16.5422	16.9664	17.3906	17.8147	18.2389	18.6630	19.0872	19.5114	19.9355	20.3597	21.2080
163	.6940	.1182	.5424	.9665	.3907	.8148	.2390	.6632	.0873	.5115	.9357	.3598	.2082
166	.6941	.1183	.5425	.9666	.3908	.8150	.2391	.6633	.0875	.5116	.9358	.3600	.2083
169	.6943	.1184	.5426	.9668	.3909	.8151	.2393	.6634	.0876	.5118	.9359	.3601	.2085
172	.6944	.1185	.5427	.9669	.3911	.8152	.2394	.6636	.0877	.5119	.9361	.3603	.2086
424175	15.6945	16.1187	16.5428	16.9670	17.3912	17.8154	18.2395	18.6637	19.0879	19.5121	19.9362	20.3604	21.2088
178	.6946	.1188	.5429	.9671	.3913	.8155	.2397	.6638	.0880	.5122	.9364	.3605	.2089
181	.6947	.1189	.5431	.9672	.3914	.8156	.2398	.6640	.0881	.5123	.9365	.3607	.2091
184	.6948	.1190	.5432	.9674	.3915	.8157	.2399	.6641	.0883	.5125	.9366	.3608	.2092
187	.6949	.1191	.5433	.9675	.3917	.8159	.2400	.6642	.0884	.5126	.9368	.3610	.2094
424190	15.6950	16.1192	16.5434	16.9676	17.3918	17.8160	18.2402	18.6644	19.0886	19.5127	19.9369	20.3611	21.2095
193	.6951	.1193	.5435	.9677	.3919	.8161	.2403	.6645	.0887	.5129	.9371	.3613	.2097
196	.6953	.1194	.5436	.9678	.3920	.8162	.2404	.6646	.0888	.5130	.9372	.3614	.2098
199	.6954	.1196	.5438	.9680	.3922	.8164	.2406	.6648	.0890	.5132	.9374	.3616	.2100
202	.6955	.1197	.5439	.9681	.3923	.8165	.2407	.6649	.0891	.5133	.9375	.3617	.2101
424205	15.6956	16.1198	16.5440	16.9682	17.3924	17.8166	18.2408	18.6650	19.0892	19.5134	19.9376	20.3618	21.2103
208	.6957	.1199	.5441	.9683	.3925	.8167	.2409	.6652	.0894	.5136	.9378	.3620	.2104
211	.6958	.1200	.5442	.9684	.3927	.8169	.2411	.6653	.0895	.5137	.9379	.3621	.2106
214	.6959	.1201	.5443	.9686	.3928	.8170	.2412	.6654	.0896	.5138	.9381	.3623	.2107
217	.6960	.1202	.5445	.9687	.3929	.8171	.2413	.6655	.0898	.5140	.9382	.3624	.2109
424220	15.6961	16.1204	16.5446	16.9688	17.3930	17.8172	18.2415	18.6657	19.0899	19.5141	19.9383	20.3626	21.2110
223	.6963	.1205	.5447	.9689	.3931	.8174	.2416	.6658	.0900	.5143	.9385	.3627	.2112
226	.6964	.1206	.5448	.9690	.3933	.8175	.2417	.6659	.0902	.5144	.9386	.3628	.2113
229	.6965	.1207	.5449	.9692	.3934	.8176	.2418	.6661	.0903	.5145	.9388	.3630	.2115
232	.6966	.1208	.5450	.9693	.3935	.8177	.2420	.6662	.0904	.5147	.9389	.3631	.2116
424235	15.6967	16.1209	16.5452	16.9694	17.3936	17.8179	18.2421	18.6663	19.0906	19.5148	19.9390	20.3633	21.2118
238	.6968	.1210	.5453	.9695	.3938	.8180	.2422	.6665	.0907	.5149	.9392	.3634	.2119
241	.6969	.1212	.5454	.9696	.3939	.8181	.2424	.6666	.0908	.5151	.9393	.3636	.2121
244	.6970	.1213	.5455	.9698	.3940	.8182	.2425	.6667	.0910	.5152	.9395	.3637	.2122
247	.6971	.1214	.5456	.9699	.3941	.8184	.2426	.6669	.0911	.5154	.9396	.3639	.2124
424250	15.6973	16.1215	16.5458	16.9700	17.3943	17.8185	18.2428	18.6670	19.0913	19.5155	19.9398	20.3640	21.2125
253	.6974	.1216	.5459	.9701	.3944	.8186	.2429	.6671	.0914	.5156	.9399	.3641	.2127
256	.6975	.1217	.5460	.9702	.3945	.8188	.2430	.6673	.0915	.5158	.9400	.3643	.2128
259	.6976	.1218	.5461	.9704	.3946	.8189	.2431	.6674	.0917	.5159	.9402	.3644	.2130
262	.6977	.1220	.5462	.9705	.3947	.8190	.2433	.6675	.0918	.5161	.9403	.3646	.2131
424265	15.6978	16.1221	16.5463	16.9706	17.3949	17.8191	18.2434	18.6677	19.0919	19.5162	19.9405	20.3647	21.2133
268	.6979	.1222	.5465	.9707	.3950	.8193	.2435	.6678	.0921	.5163	.9406	.3649	.2134
271	.6980	.1223	.5466	.9708	.3951	.8194	.2437	.6679	.0922	.5165	.9407	.3650	.2136
274	.6981	.1224	.5467	.9710	.3952	.8195	.2438	.6681	.0923	.5166	.9409	.3652	.2137
277	.6982	.1225	.5468	.9711	.3954	.8196	.2439	.6682	.0925	.5167	.9410	.3653	.2139
424280	15.6984	16.1226	16.5469	16.9712	17.3955	17.8198	18.2440	18.6683	19.0926	19.5169	19.9412	20.3654	21.2140
283	.6985	.1228	.5470	.9713	.3956	.8199	.2442	.6685	.0927	.5170	.9413	.3656	.2142
286	.6986	.1229	.5472	.9714	.3957	.8200	.2443	.6686	.0929	.5172	.9414	.3657	.2143
289	.6987	.1230	.5473	.9716	.3958	.8201	.2444	.6687	.0930	.5173	.9416	.3659	.2145
292	.6988	.1231	.5474	.9717	.3960	.8203	.2446	.6688	.0931	.5174	.9417	.3660	.2146
424295	15.6989	16.1232	16.5475	16.9718	17.3961	17.8204	18.2447	18.6690	19.0933	19.5176	19.9419	20.3662	21.2148
298	.6990	.1233	.5476	.9719	.3962	.8205	.2448	.6691	.0934	.5177	.9420	.3663	.2149
301	.6991	.1234	.5477	.9720	.3963	.8206	.2449	.6692	.0935	.5178	.9421	.3664	.2151
304	.6992	.1236	.5479	.9722	.3965	.8208	.2451	.6694	.0937	.5180	.9423	.3666	.2152
307	.6994	.1237	.5480	.9723	.3966	.8209	.2452	.6695	.0938	.5181	.9424	.3667	.2154
424310	15.6995	16.1238	16.5481	16.9724	17.3967	17.8210	18.2453	18.6696	19.0940	19.5183	19.9426	20.3669	21.2155
313	.6996	.1239	.5482	.9725	.3968	.8211	.2455	.6698	.0941	.5184	.9427	.3670	.2157
316	.6997	.1240	.5483	.9726	.3970	.8213	.2456	.6699	.0942	.5185	.9429	.3672	.2158
319	.6998	.1241	.5484	.9728	.3971	.8214	.2457	.6700	.0944	.5187	.9430	.3673	.2160
322	.6999	.1242	.5486	.9729	.3972	.8215	.2458	.6702	.0945	.5188	.9431	.3675	.2161
424325	15.7000	16.1244	16.5487	16.9730	17.3973	17.8217	18.2460	18.6703	19.0946	19.5190	19.9433	20.3676	21.2163
328	.7001	.1245	.5488	.9731	.3974	.8218	.2461	.6704	.0948	.5191	.9434	.3677	.2164
331	.7002	.1246	.5489	.9732	.3976	.8219	.2462	.6706	.0949	.5192	.9436	.3679	.2166
334	.7004	.1247	.5490	.9734	.3977	.8220	.2464	.6707	.0950	.5194	.9437	.3680	.2167
337	.7005	.1248	.5491	.9735	.3978	.8222	.2465	.6708	.0952	.5195	.9438	.3682	.2169
424340	15.7006	16.1249	16.5493	16.9736	17.3979	17.8223	18.2466	18.6710	19.0953	19.5196	19.9440	20.3683	21.2170
343	.7007	.1250	.5494	.9737	.3981	.8224	.2467	.6711	.0954	.5198	.9441	.3685	.2172
346	.7008	.1251	.5495	.9738	.3982	.8225	.2469	.6712	.0956	.5199	.9443	.3686	.2173
349	.7009	.1253	.5496	.9740	.3983	.8227	.2470	.6714	.0957	.5201	.9444	.3688	.2175
352	.7010	.1254	.5497	.9741	.3984	.8228	.2471	.6715	.0958	.5202	.9445	.3689	.2176
424355	15.7011	16.1255	16.5498	16.9742	17.3986	17.8229	18.2473	18.6716	19.0960	19.5203	19.9447	20.3690	21.2178
358	.7012	.1256	.5500	.9743	.3987	.8230	.2474	.6718	.0961	.5205	.9448	.3692	.2179
361	.7014	.1257	.5501	.9744	.3988	.8232	.2475	.6719	.0962	.5206	.9450	.3693	.2181
364	.7015	.1258	.5502	.9746	.3989	.8233	.2477	.6720	.0964	.5207	.9451	.3695	.2182
367	.7016	.1259	.5503	.9747	.3990	.8234	.2478	.6721	.0965	.5209	.9452	.3696	.2184
424370	15.7017	16.1261	16.5504	16.9748	17.3992	17.8235	18.2479	18.6723	19.0967	19.5210	19.9454	20.3698	21.2185
373	.7018	.1262	.5505	.9749	.3993	.8237	.2480	.6724	.0968	.5212	.9455	.3699	.2187
376	.7019	.1263	.5507	.9750	.3994	.8238	.2482	.6725	.0969	.5213	.9457	.3700	.2188
379	.7020	.1264	.5508	.9752	.3995	.8239	.2483	.6727	.0971	.5214	.9458	.3702	.2190
382	.7021	.1265	.5509	.9753	.3997	.8240	.2484	.6728	.0972	.5216	.9460	.3703	.2191
424385	15.7022	16.1266	16.5510	16.9754	17.3998	17.8242	18.2486	18.6729	19.0973	19.5217	19.9461	20.3705	21.2193
388	.7024	.1267	.5511	.9755	.3999	.8243	.2487	.6731	.0975	.5218	.9462	.3706	.2194
391	.7025	.1269	.5512	.9756	.4000	.8244	.2488	.6732	.0976	.5220	.9464	.3708	.2196
394	.7026	.1270	.5514	.9758	.4002	.8245	.2489	.6733	.0977	.5221	.9465	.3709	.2197
397	.7027	.1271	.5515	.9759	.4003	.8247	.2491	.6735	.0979	.5223	.9467	.3711	.2199
424400	15.7028	16.1272	16.5516	16.9760	17.4004	17.8248	18.2492	18.6736	19.0980	19.5224	19.9468	20.3712	21.2200

MEGACYCLES PER SECOND

HARMONICS

BASIC FREQ.	24	25	26	27	28	29	30	31	32	33	34	35	36
424400	10.1856	10.6100	11.0344	11.4588	11.8832	12.3076	12.7320	13.1564	13.5808	14.0052	14.4296	14.8540	15.2784
403	.1857	.6101	.0345	.4589	.8833	.3077	.7321	.1565	.5809	.0053	.4297	.8541	.2785
406	.1857	.6102	.0346	.4590	.8834	.3078	.7322	.1566	.5810	.0054	.4298	.8542	.2786
409	.1858	.6102	.0346	.4590	.8835	.3079	.7323	.1567	.5811	.0055	.4299	.8543	.2787
412	.1859	.6103	.0347	.4591	.8835	.3079	.7324	.1568	.5812	.0056	.4300	.8544	.2788
424415	10.1860	10.6104	11.0348	11.4592	11.8836	12.3080	12.7325	13.1569	13.5813	14.0057	14.4301	14.8545	15.2789
418	.1860	.6105	.0349	.4593	.8837	.3081	.7325	.1570	.5814	.0058	.4302	.8546	.2790
421	.1861	.6105	.0349	.4594	.8838	.3082	.7326	.1571	.5815	.0059	.4303	.8547	.2792
424	.1862	.6106	.0350	.4594	.8839	.3083	.7327	.1571	.5816	.0060	.4304	.8548	.2793
427	.1862	.6107	.0351	.4595	.8840	.3084	.7328	.1572	.5817	.0061	.4305	.8549	.2794
424430	10.1863	10.6108	11.0352	11.4596	11.8840	12.3085	12.7329	13.1573	13.5818	14.0062	14.4306	14.8551	15.2795
433	.1864	.6108	.0353	.4597	.8841	.3086	.7330	.1574	.5819	.0063	.4307	.8552	.2796
436	.1865	.6109	.0353	.4598	.8842	.3086	.7331	.1575	.5820	.0064	.4308	.8553	.2797
439	.1865	.6110	.0354	.4599	.8843	.3087	.7332	.1576	.5820	.0065	.4309	.8554	.2798
442	.1866	.6111	.0355	.4599	.8844	.3088	.7333	.1577	.5821	.0066	.4310	.8555	.2799
424445	10.1867	10.6111	11.0356	11.4600	11.8845	12.3089	12.7334	13.1578	13.5822	14.0067	14.4311	14.8556	15.2800
448	.1868	.6112	.0356	.4601	.8845	.3090	.7334	.1579	.5823	.0068	.4312	.8557	.2801
451	.1868	.6113	.0357	.4602	.8846	.3091	.7335	.1580	.5824	.0069	.4313	.8558	.2802
454	.1869	.6114	.0358	.4603	.8847	.3092	.7336	.1581	.5825	.0070	.4314	.8559	.2803
457	.1870	.6114	.0359	.4603	.8848	.3093	.7337	.1582	.5826	.0071	.4315	.8560	.2805
424460	10.1870	10.6115	11.0360	11.4604	11.8849	12.3093	12.7338	13.1583	13.5827	14.0072	14.4316	14.8561	15.2806
463	.1871	.6116	.0360	.4605	.8850	.3094	.7339	.1584	.5828	.0073	.4317	.8562	.2807
466	.1872	.6117	.0361	.4606	.8850	.3095	.7340	.1584	.5829	.0074	.4318	.8563	.2808
469	.1873	.6117	.0362	.4607	.8851	.3096	.7341	.1585	.5830	.0075	.4319	.8564	.2809
472	.1873	.6118	.0363	.4607	.8852	.3097	.7342	.1586	.5831	.0076	.4320	.8565	.2810
424475	10.1874	10.6119	11.0364	11.4608	11.8853	12.3098	12.7343	13.1587	13.5832	14.0077	14.4322	14.8566	15.2811
478	.1875	.6120	.0364	.4609	.8854	.3099	.7343	.1588	.5833	.0078	.4323	.8567	.2812
481	.1875	.6120	.0365	.4610	.8855	.3099	.7344	.1589	.5834	.0079	.4324	.8568	.2813
484	.1876	.6121	.0366	.4611	.8856	.3100	.7345	.1590	.5835	.0080	.4325	.8569	.2814
487	.1877	.6122	.0367	.4611	.8856	.3101	.7346	.1591	.5836	.0081	.4326	.8570	.2815
424490	10.1878	10.6123	11.0367	11.4612	11.8857	12.3102	12.7347	13.1592	13.5837	14.0082	14.4327	14.8572	15.2816
493	.1878	.6123	.0368	.4613	.8858	.3103	.7348	.1593	.5838	.0083	.4328	.8573	.2817
496	.1879	.6124	.0369	.4614	.8859	.3104	.7349	.1594	.5839	.0084	.4329	.8574	.2819
499	.1880	.6125	.0370	.4615	.8860	.3105	.7350	.1595	.5840	.0085	.4330	.8575	.2820
502	.1880	.6126	.0371	.4616	.8861	.3106	.7351	.1596	.5841	.0086	.4331	.8576	.2821
424505	10.1881	10.6126	11.0371	11.4616	11.8861	12.3106	12.7352	13.1597	13.5842	14.0087	14.4332	14.8577	15.2822
508	.1882	.6127	.0372	.4617	.8862	.3107	.7352	.1597	.5843	.0088	.4333	.8578	.2823
511	.1883	.6128	.0373	.4618	.8863	.3108	.7353	.1598	.5844	.0089	.4334	.8579	.2824
514	.1883	.6129	.0374	.4619	.8864	.3109	.7354	.1599	.5844	.0090	.4335	.8580	.2825
517	.1884	.6129	.0374	.4620	.8865	.3110	.7355	.1600	.5845	.0091	.4336	.8581	.2826
424520	10.1885	10.6130	11.0375	11.4620	11.8866	12.3111	12.7356	13.1601	13.5846	14.0092	14.4337	14.8582	15.2827
523	.1886	.6131	.0376	.4621	.8866	.3112	.7357	.1602	.5847	.0093	.4338	.8583	.2828
526	.1886	.6132	.0377	.4622	.8867	.3113	.7358	.1603	.5848	.0094	.4339	.8584	.2829
529	.1887	.6132	.0378	.4623	.8868	.3113	.7359	.1604	.5849	.0095	.4340	.8585	.2830
532	.1888	.6133	.0378	.4624	.8869	.3114	.7360	.1605	.5850	.0096	.4341	.8586	.2832
424535	10.1888	10.6134	11.0379	11.4624	11.8870	12.3115	12.7361	13.1606	13.5851	14.0097	14.4342	14.8587	15.2833
538	.1889	.6135	.0380	.4625	.8871	.3116	.7361	.1607	.5852	.0098	.4343	.8588	.2834
541	.1890	.6135	.0381	.4626	.8871	.3117	.7362	.1608	.5853	.0099	.4344	.8589	.2835
544	.1891	.6136	.0381	.4627	.8872	.3118	.7363	.1609	.5854	.0100	.4345	.8590	.2836
547	.1891	.6137	.0382	.4628	.8873	.3119	.7364	.1610	.5855	.0101	.4346	.8591	.2837
424550	10.1892	10.6138	11.0383	11.4629	11.8874	12.3120	12.7365	13.1611	13.5856	14.0102	14.4347	14.8593	15.2838
553	.1893	.6138	.0384	.4629	.8875	.3120	.7366	.1611	.5857	.0102	.4348	.8594	.2839
556	.1893	.6139	.0385	.4630	.8876	.3121	.7367	.1612	.5858	.0103	.4349	.8595	.2840
559	.1894	.6140	.0385	.4631	.8877	.3122	.7368	.1613	.5859	.0104	.4350	.8596	.2841
562	.1895	.6141	.0386	.4632	.8877	.3123	.7369	.1614	.5860	.0105	.4351	.8597	.2842
424565	10.1896	10.6141	11.0387	11.4633	11.8878	12.3124	12.7370	13.1615	13.5861	14.0106	14.4352	14.8598	15.2843
568	.1896	.6142	.0388	.4633	.8879	.3125	.7370	.1616	.5862	.0107	.4353	.8599	.2844
571	.1897	.6143	.0388	.4634	.8880	.3126	.7371	.1617	.5863	.0108	.4354	.8600	.2846
574	.1898	.6144	.0389	.4635	.8881	.3126	.7372	.1618	.5864	.0109	.4355	.8601	.2847
577	.1898	.6144	.0390	.4636	.8882	.3127	.7373	.1619	.5865	.0110	.4356	.8602	.2848
424580	10.1899	10.6145	11.0391	11.4637	11.8882	12.3128	12.7374	13.1620	13.5866	14.0111	14.4357	14.8603	15.2849
583	.1900	.6146	.0392	.4637	.8883	.3129	.7375	.1621	.5867	.0112	.4358	.8604	.2850
586	.1901	.6147	.0392	.4638	.8884	.3130	.7376	.1622	.5868	.0113	.4359	.8605	.2851
589	.1901	.6147	.0393	.4639	.8885	.3131	.7377	.1623	.5868	.0114	.4360	.8606	.2852
592	.1902	.6148	.0394	.4640	.8886	.3132	.7378	.1624	.5869	.0115	.4361	.8607	.2853
424595	10.1903	10.6149	11.0395	11.4641	11.8887	12.3133	12.7379	13.1624	13.5870	14.0116	14.4362	14.8608	15.2854
598	.1904	.6150	.0395	.4641	.8887	.3133	.7379	.1625	.5871	.0117	.4363	.8609	.2855
601	.1904	.6150	.0396	.4642	.8888	.3134	.7380	.1626	.5872	.0118	.4364	.8610	.2856
604	.1905	.6151	.0397	.4643	.8889	.3135	.7381	.1627	.5873	.0119	.4365	.8611	.2857
607	.1906	.6152	.0398	.4644	.8890	.3136	.7382	.1628	.5874	.0120	.4366	.8612	.2859
424610	10.1906	10.6153	11.0399	11.4645	11.8891	12.3137	12.7383	13.1629	13.5875	14.0121	14.4367	14.8614	15.2860
613	.1907	.6153	.0399	.4646	.8892	.3138	.7384	.1630	.5876	.0122	.4368	.8615	.2861
616	.1908	.6154	.0400	.4646	.8892	.3139	.7385	.1631	.5877	.0123	.4369	.8616	.2862
619	.1909	.6155	.0401	.4647	.8893	.3140	.7386	.1632	.5878	.0124	.4370	.8617	.2863
622	.1909	.6156	.0402	.4648	.8894	.3140	.7387	.1633	.5879	.0125	.4371	.8618	.2864
424625	10.1910	10.6156	11.0403	11.4649	11.8895	12.3141	12.7388	13.1634	13.5880	14.0126	14.4373	14.8619	15.2865
628	.1911	.6157	.0403	.4650	.8896	.3142	.7388	.1635	.5881	.0127	.4374	.8620	.2866
631	.1911	.6158	.0404	.4650	.8897	.3143	.7389	.1636	.5882	.0128	.4375	.8621	.2867
634	.1912	.6159	.0405	.4651	.8898	.3144	.7390	.1637	.5883	.0129	.4376	.8622	.2868
637	.1913	.6159	.0406	.4652	.8898	.3145	.7391	.1637	.5884	.0130	.4377	.8623	.2869
424640	10.1914	10.6160	11.0406	11.4653	11.8899	12.3146	12.7392	13.1638	13.5885	14.0131	14.4378	14.8624	15.2870
643	.1914	.6161	.0407	.4654	.8900	.3146	.7393	.1639	.5886	.0132	.4379	.8625	.2871
646	.1915	.6162	.0408	.4654	.8901	.3147	.7394	.1640	.5887	.0133	.4380	.8626	.2873
649	.1916	.6162	.0409	.4655	.8902	.3148	.7395	.1641	.5888	.0134	.4381	.8627	.2874
652	.1916	.6163	.0410	.4656	.8903	.3149	.7396	.1642	.5889	.0135	.4382	.8628	.2875
424655	10.1917	10.6164	11.0410	11.4657	11.8903	12.3150	12.7397	13.1643	13.5890	14.0136	14.4383	14.8629	15.2876
658	.1918	.6165	.0411	.4658	.8904	.3151	.7397	.1644	.5891	.0137	.4384	.8630	.2877
661	.1919	.6165	.0412	.4658	.8905	.3152	.7398	.1645	.5892	.0138	.4385	.8631	.2878
664	.1919	.6166	.0413	.4659	.8906	.3153	.7399	.1646	.5892	.0139	.4386	.8632	.2879
667	.1920	.6167	.0413	.4660	.8907	.3153	.7400	.1647	.5893	.0140	.4387	.8633	.2880
424670	10.1921	10.6168	11.0414	11.4661	11.8908	12.3154	12.7401	13.1648	13.5894	14.0141	14.4388	14.8635	15.2881
673	.1922	.6168	.0415	.4662	.8908	.3155	.7402	.1649	.5895	.0142	.4389	.8636	.2882
676	.1922	.6169	.0416	.4663	.8909	.3156	.7403	.1650	.5896	.0143	.4390	.8637	.2883
679	.1923	.6170	.0417	.4663	.8910	.3157	.7404	.1650	.5897	.0144	.4391	.8638	.2884
682	.1924	.6171	.0417	.4664	.8911	.3158	.7405	.1651	.5898	.0145	.4392	.8639	.2886
424685	10.1924	10.6171	11.0418	11.4665	11.8912	12.3159	12.7406	13.1652	13.5899	14.0146	14.4393	14.8640	15.2887
688	.1925	.6172	.0419	.4666	.8913	.3160	.7406	.1653	.5900	.0147	.4394	.8641	.2888
691	.1926	.6173	.0420	.4667	.8913	.3160	.7407	.1654	.5901	.0148	.4395	.8642	.2889
694	.1927	.6174	.0420	.4667	.8914	.3161	.7408	.1655	.5902	.0149	.4396	.8643	.2890
697	.1927	.6174	.0421	.4668	.8915	.3162	.7409	.1656	.5903	.0150	.4397	.8644	.2891
424700	10.1928	10.6175	11.0422	11.4669	11.8916	12.3163	12.7410	13.1657	13.5904	14.0151	14.4398	14.8645	15.2892

MEGACYCLES PER SECOND

H A R M O N I C S

BASIC FREQ.	37	38	39	40	41	42	43	44	45	46	47	48	50
424400	15.7028	16.1272	16.5516	16.9760	17.4004	17.8248	18.2492	18.6736	19.0980	19.5224	19.9468	20.3712	21.2200
403	.7029	.1273	.5517	.9761	.4005	.8249	.2493	.6737	.0981	.5225	.9469	.3713	.2202
406	.7030	.1274	.5518	.9762	.4006	.8251	.2495	.6739	.0983	.5227	.9471	.3715	.2203
409	.7031	.1275	.5520	.9764	.7008	.8252	.2496	.6740	.0984	.5228	.9472	.3716	.2205
412	.7032	.1277	.5521	.9765	.4009	.8253	.2497	.6741	.0985	.5230	.9474	.3718	.2206
424415	15.7034	16.1278	16.5522	16.9766	17.4010	17.8254	18.2498	18.6743	19.0987	19.5231	19.9475	20.3719	21.2208
418	.7035	.1279	.5523	.9767	.4011	.8256	.2500	.6744	.0988	.5232	.9476	.3721	.2209
421	.7036	.1280	.5524	.9768	.4013	.8257	.2501	.6745	.0989	.5234	.9478	.3722	.2211
424	.7037	.1281	.5525	.9770	.4014	.8258	.2502	.6747	.0991	.5235	.9479	.3724	.2212
427	.7038	.1282	.5527	.9771	.4015	.8259	.2504	.6748	.0992	.5236	.9481	.3725	.2214
424430	15.7039	16.1283	16.5528	16.9772	17.4016	17.8261	18.2505	18.6749	19.0994	19.5238	19.9482	20.3726	21.2215
433	.7040	.1285	.5529	.9773	.4018	.8262	.2506	.6751	.0995	.5239	.9484	.2728	.2217
436	.7041	.1286	.5530	.9774	.4019	.8263	.2507	.6752	.0996	.5241	.9485	.3729	.2218
439	.7042	.1287	.5531	.9776	.4020	.8264	.2509	.6753	.0998	.5242	.9486	.3731	.2220
442	.7044	.1288	.5532	.9777	.4021	.8266	.2510	.6754	.0999	.5243	.9488	.3732	.2221
424445	15.7045	16.1289	16.5534	16.9778	17.4022	17.8267	18.2511	18.6756	19.1000	19.5245	19.9489	20.3734	21.2223
448	.7046	.1290	.5535	.9779	.4024	.8268	.2513	.6757	.1002	.5246	.9491	.3735	.2224
451	.7047	.1291	.5536	.9780	.4025	.8269	.2514	.6758	.1003	.5247	.9492	.3736	.2226
454	.7048	.1293	.5537	.9782	.4026	.8271	.2515	.6760	.1004	.5249	.9493	.3738	.2227
457	.7049	.1294	.5538	.9783	.4027	.8272	.2517	.6761	.1006	.5250	.9495	.3739	.2229
424460	15.7050	16.1295	16.5539	16.9784	17.4029	17.8273	18.2518	18.6762	19.1007	19.5252	19.9496	20.3741	21.2230
463	.7051	.1296	.5541	.9785	.4030	.8274	.2519	.6764	.1008	.5253	.9498	.3742	.2232
466	.7052	.1297	.5542	.9786	.4031	.8276	.2520	.6765	.1010	.5254	.9499	.3744	.2233
469	.7054	.1298	.5543	.9788	.4032	.8277	.2522	.6766	.1011	.5256	.9500	.3745	.2235
472	.7055	.1299	.5544	.9789	.4034	.8278	.2523	.6768	.1012	.5257	.9502	.3747	.2236
424475	15.7056	16.1301	16.5545	16.9790	17.4035	17.8280	18.2524	18.6769	19.1014	19.5259	19.9503	20.3748	21.2238
478	.7057	.1302	.5546	.9791	.4036	.8281	.2526	.6770	.1015	.5260	.9505	.3749	.2239
481	.7058	.1303	.5548	.9792	.4037	.8282	.2527	.6772	.1016	.5261	.9506	.3751	.2241
484	.7059	.1304	.5549	.9794	.4038	.8283	.2528	.6773	.1018	.5263	.9507	.3752	.2242
487	.7060	.1305	.5550	.9795	.4040	.8285	.2529	.6774	.1019	.5264	.9509	.3754	.2244
424490	15.7061	16.1306	16.5551	16.9796	17.4041	17.8286	18.2531	18.6776	19.1021	19.5265	19.9510	20.3755	21.2245
493	.7062	.1307	.5552	.9797	.4042	.8287	.2532	.6777	.1022	.5267	.9512	.3757	.2247
496	.7064	.1308	.5553	.9798	.4043	.8288	.2533	.6778	.1023	.5268	.9513	.3758	.2248
499	.7065	.1310	.5555	.9800	.4045	.8290	.2535	.6780	.1025	.5270	.9515	.3760	.2250
502	.7066	.1311	.5556	.9801	.4046	.8291	.2536	.6781	.1026	.5271	.9516	.3761	.2251
424505	15.7067	16.1312	16.5557	16.9802	17.4047	17.8292	18.2537	18.6782	19.1027	19.5272	19.9517	20.3762	21.2253
508	.7068	.1313	.5558	.9803	.4048	.8293	.2538	.6784	.1029	.5274	.9519	.3764	.2254
511	.7069	.1314	.5559	.9804	.4050	.8295	.2540	.6785	.1030	.5275	.9520	.3765	.2256
514	.7070	.1315	.5560	.9806	.4051	.8296	.2541	.6786	.1031	.5276	.9522	.3767	.2257
517	.7071	.1316	.5562	.9807	.4052	.8297	.2542	.6787	.1033	.5278	.9523	.3768	.2259
424520	15.7072	16.1318	16.5563	16.9808	17.4053	17.8298	18.2544	18.6789	19.1034	19.5279	19.9524	20.3770	21.2260
523	.7074	.1319	.5564	.9809	.4054	.8300	.2545	.6790	.1035	.5281	.9526	.3771	.2262
526	.7075	.1320	.5565	.9810	.4056	.8301	.2546	.6791	.1037	.5282	.9527	.3772	.2263
529	.7076	.1321	.5566	.9812	.4057	.8302	.2547	.6793	.1038	.5283	.9529	.3774	.2265
532	.7077	.1322	.5567	.9813	.4058	.8303	.2549	.6794	.1039	.5285	.9530	.3775	.2266
424535	15.7078	16.1323	16.5569	16.9814	17.4059	17.8305	18.2550	18.6795	19.1041	19.5286	19.9531	20.3777	21.2268
538	.7079	.1324	.5570	.9815	.4061	.8306	.2551	.6797	.1042	.5287	.9533	.3778	.2269
541	.7080	.1326	.5571	.9816	.4062	.8307	.2553	.6798	.1043	.5289	.9534	.3780	.2271
544	.7081	.1327	.5572	.9818	.4063	.8308	.2554	.6799	.1045	.5290	.9536	.3781	.2272
547	.7082	.1328	.5573	.9819	.4064	.8310	.2555	.6801	.1046	.5292	.9537	.3783	.2274
424550	15.7084	16.1329	16.5575	16.9820	17.4066	17.8311	18.2557	18.6802	19.1048	19.5293	19.9539	20.3784	21.2275
553	.7085	.1330	.5576	.9821	.4067	.8312	.2558	.6803	.1049	.5294	.9540	.3785	.2277
556	.7086	.1331	.5577	.9822	.4068	.8314	.2559	.6805	.1050	.5296	.9541	.3787	.2278
559	.7087	.1332	.5578	.9824	.4069	.8315	.2560	.6806	.1052	.5297	.9543	.3788	.2280
562	.7088	.1334	.5579	.9825	.4070	.8316	.2562	.6807	.1053	.5299	.9544	.3790	.2281
424565	15.7089	16.1335	16.5580	16.9826	17.4072	17.8317	18.2563	18.6809	19.1054	19.5300	19.9546	20.3791	21.2283
568	.7090	.1336	.5582	.9827	.4073	.8319	.2564	.6810	.1056	.5301	.9547	.3793	.2284
571	.7091	.1337	.5583	.9828	.4074	.8320	.2566	.6811	.1057	.5303	.9548	.3794	.2286
574	.7092	.1338	.5584	.9830	.4075	.8321	.2567	.6813	.1058	.5304	.9550	.3796	.2287
577	.7093	.1339	.5585	.9831	.4077	.8322	.2568	.6814	.1060	.5305	.9551	.3797	.2289
424580	15.7095	16.1340	16.5586	16.9832	17.4078	17.8324	18.2569	18.6815	19.1061	19.5307	19.9553	20.3798	21.2290
583	.7096	.1342	.5587	.9833	.4079	.8325	.2571	.6817	.1062	.5308	.9554	.3800	.2292
586	.7097	.1343	.5589	.9834	.4080	.8326	.2572	.6818	.1064	.5310	.9555	.3801	.2293
589	.7098	.1344	.5590	.9836	.4081	.8327	.2573	.6819	.1065	.5311	.9557	.3803	.2295
592	.7099	.1345	.5591	.9837	.4083	.8329	.2575	.6820	.1066	.5312	.9558	.3804	.2296
424595	15.7100	16.1346	16.5592	16.9838	17.4084	17.8330	18.2576	18.6822	19.1068	19.5314	19.9560	20.3806	21.2298
598	.7101	.1347	.5593	.9839	.4085	.8331	.2577	.6823	.1069	.5315	.9561	.3807	.2299
601	.7102	.1348	.5594	.9840	.4086	.8332	.2578	.6824	.1070	.5316	.9562	.3808	.2301
604	.7103	.1350	.5596	.9842	.4088	.8334	.2580	.6826	.1072	.5318	.9564	.3810	.2302
607	.7105	.1351	.5597	.9843	.4089	.8335	.2581	.6827	.1073	.5319	.9565	.3811	.2304
424610	15.7106	16.1352	16.5598	16.9844	17.4090	17.8336	18.2582	18.6828	19.1075	19.5321	19.9567	20.3813	21.2305
613	.7107	.1353	.5599	.9845	.4091	.8337	.2584	.6830	.1076	.5322	.9568	.3814	.2307
616	.7108	.1354	.5600	.9846	.4093	.8339	.2585	.6831	.1077	.5323	.9570	.3816	.2308
619	.7109	.1355	.5601	.9848	.4094	.8340	.2586	.6832	.1079	.5325	.9571	.3817	.2310
622	.7110	.1356	.5603	.9849	.4095	.8341	.2587	.6834	.1080	.5326	.9572	.3819	.2311
424625	15.7111	16.1358	16.5604	16.9850	17.4096	17.8343	18.2589	18.6835	19.1081	19.5328	19.9574	20.3820	21.2313
628	.7112	.1359	.5605	.9851	.4097	.8344	.2590	.6836	.1083	.5329	.9575	.3821	.2314
631	.7113	.1360	.5606	.9852	.4099	.8345	.2591	.6838	.1084	.5330	.9577	.3823	.2316
634	.7115	.1361	.5607	.9854	.4100	.8346	.2593	.6839	.1085	.5332	.9578	.3824	.2317
637	.7116	.1362	.5608	.9855	.4101	.8348	.2594	.6840	.1087	.5333	.9579	.3826	.2319
424640	15.7117	16.1363	16.5610	16.9856	17.4102	17.8349	18.2595	18.6842	19.1088	19.5334	19.9581	20.3827	21.2320
643	.7118	.1364	.5611	.9857	.4104	.8350	.2596	.6843	.1089	.5336	.9582	.3829	.2322
646	.7119	.1365	.5612	.9858	.4105	.8351	.2598	.6844	.1091	.5337	.9584	.3830	.2323
649	.7120	.1367	.5613	.9860	.4106	.8353	.2599	.6846	.1092	.5339	.9585	.3832	.2325
652	.7121	.1368	.5614	.9861	.4107	.8354	.2600	.6847	.1093	.5340	.9586	.3833	.2326
424655	15.7122	16.1369	16.5615	16.9862	17.4109	17.8355	18.2602	18.6848	19.1095	19.5341	19.9588	20.3834	21.2328
658	.7123	.1370	.5617	.9863	.4110	.8356	.2603	.6850	.1096	.5343	.9589	.3836	.2329
661	.7125	.1371	.5618	.9864	.4111	.8358	.2604	.6851	.1097	.5344	.9591	.3837	.2331
664	.7126	.1372	.5619	.9866	.4112	.8359	.2606	.6852	.1099	.5345	.9592	.3839	.2332
667	.7127	.1373	.5620	.9867	.4113	.8360	.2607	.6853	.1100	.5347	.9593	.3840	.2334
424670	15.7128	16.1375	16.5621	16.9868	17.4115	17.8361	18.2608	18.6855	19.1102	19.5348	19.9595	20.3842	21.2335
673	.7129	.1376	.5622	.9869	.4116	.8363	.2609	.6856	.1103	.5350	.9596	.3843	.2337
676	.7130	.1377	.5624	.9870	.4117	.8364	.2611	.6857	.1104	.5351	.9598	.3844	.2338
679	.7131	.1378	.5625	.9872	.4118	.8365	.2612	.6859	.1106	.5352	.9599	.3846	.2340
682	.7132	.1379	.5626	.9873	.4120	.8366	.2613	.6860	.1107	.5354	.9601	.3847	.2341
424685	15.7133	16.1380	16.5627	16.9874	17.4121	17.8368	18.2615	18.6861	19.1108	19.5355	19.9602	20.3849	21.2343
688	.7135	.1381	.5628	.9875	.4122	.8369	.2616	.6863	.1110	.5356	.9603	.3850	.2344
691	.7136	.1383	.5629	.9876	.4123	.8370	.2617	.6864	.1111	.5358	.9605	.3852	.2346
694	.7137	.1384	.5631	.9878	.4125	.8371	.2618	.6865	.1112	.5359	.9606	.3853	.2347
697	.7138	.1385	.5632	.9879	.4126	.8373	.2620	.6867	.1114	.5361	.9608	.3855	.2349
424700	15.7139	16.1386	16.5633	16.9880	17.4127	17.8374	18.2621	18.6868	19.1115	19.5362	19.9609	20.3856	21.2350

MEGACYCLES PER SECOND

H A R M O N I C S

BASIC FREQ.	24	25	26	27	28	29	30	31	32	33	34	35	36
424700	10.1928	10.6175	11.0422	11.4669	11.8916	12.3163	12.7410	13.1657	13.5904	14.0151	14.4398	14.8645	15.2892
703	.1929	.6176	.0423	.4670	.8917	.3164	.7411	.1658	.5905	.0152	.4399	.8646	.2893
706	.1929	.6177	.0424	.4671	.8918	.3165	.7412	.1659	.5906	.0153	.4400	.8647	.2894
709	.1930	.6177	.0424	.4671	.8919	.3166	.7413	.1660	.5907	.0154	.4401	.8649	.2895
712	.1931	.6178	.0425	.4672	.8919	.3166	.7414	.1661	.5908	.0155	.4402	.8649	.2896
424715	10.1932	10.6179	11.0426	11.4673	11.8920	12.3167	12.7415	13.1662	13.5909	14.0156	14.4403	14.8650	15.2897
718	.1932	.6180	.0427	.4674	.8921	.3168	.7415	.1663	.5910	.0157	.4404	.8651	.2898
721	.1933	.6180	.0427	.4675	.8922	.3169	.7416	.1664	.5911	.0158	.4405	.8652	.2900
724	.1934	.6181	.0428	.4675	.8923	.3170	.7417	.1664	.5912	.0159	.4406	.8653	.2901
727	.1934	.6182	.0429	.4676	.8924	.3171	.7418	.1665	.5913	.0160	.4407	.8654	.2902
424730	10.1935	10.6183	11.0430	11.4677	11.8924	12.3172	12.7419	13.1666	13.5914	14.0161	14.4408	14.8656	15.2903
733	.1936	.6183	.0431	.4678	.8925	.3173	.7420	.1667	.5915	.0162	.4409	.8657	.2904
736	.1937	.6184	.0431	.4679	.8926	.3173	.7421	.1668	.5916	.0163	.4410	.8658	.2905
739	.1937	.6185	.0432	.4680	.8927	.3174	.7422	.1669	.5916	.0164	.4411	.8659	.2906
742	.1938	.6186	.0433	.4680	.8928	.3175	.7423	.1670	.5917	.0165	.4412	.8660	.2907
424745	10.1939	10.6186	11.0434	11.4681	11.8929	12.3176	12.7424	13.1671	13.5918	14.0166	14.4413	14.8661	15.2908
748	.1940	.6187	.0434	.4682	.8929	.3177	.7424	.1672	.5919	.0167	.4414	.8662	.2909
751	.1940	.6188	.0435	.4683	.8930	.3178	.7425	.1673	.5920	.0168	.4415	.8663	.2910
754	.1941	.6189	.0436	.4684	.8931	.3179	.7426	.1674	.5921	.0169	.4416	.8664	.2911
757	.1942	.6189	.0437	.4684	.8932	.3180	.7427	.1675	.5922	.0170	.4417	.8665	.2913
424760	10.1942	10.6190	11.0438	11.4685	11.8933	12.3180	12.7428	13.1676	13.5923	14.0171	14.4418	14.8666	15.2914
763	.1943	.6191	.0438	.4686	.8934	.3181	.7429	.1677	.5924	.0172	.4419	.8667	.2915
766	.1944	.6192	.0439	.4687	.8934	.3182	.7430	.1677	.5925	.0173	.4420	.8668	.2916
769	.1945	.6192	.0440	.4688	.8935	.3183	.7431	.1678	.5926	.0174	.4421	.8669	.2917
772	.1945	.6193	.0441	.4688	.8936	.3184	.7432	.1679	.5927	.0175	.4422	.8670	.2918
424775	10.1946	10.6194	11.0442	11.4689	11.8937	12.3185	12.7433	13.1680	13.5928	14.0176	14.4424	14.8671	15.2919
778	.1947	.6195	.0442	.4690	.8938	.3186	.7433	.1681	.5929	.0177	.4425	.8672	.2920
781	.1947	.6195	.0443	.4691	.8939	.3186	.7434	.1682	.5930	.0178	.4426	.8673	.2921
784	.1948	.6196	.0444	.4692	.8940	.3187	.7435	.1683	.5931	.0179	.4427	.8674	.2922
787	.1949	.6197	.0445	.4692	.8940	.3188	.7436	.1684	.5932	.0180	.4428	.8675	.2923
424790	10.1950	10.6198	11.0445	11.4693	11.8941	12.3189	12.7437	13.1685	13.5933	14.0181	14.4429	14.8677	15.2924
793	.1950	.6198	.0446	.4694	.8942	.3190	.7438	.1686	.5934	.0182	.4430	.8678	.2925
796	.1951	.6199	.0447	.4695	.8943	.3191	.7439	.1687	.5935	.0183	.4431	.8679	.2927
799	.1952	.6200	.0448	.4696	.8944	.3192	.7440	.1688	.5936	.0184	.4432	.8680	.2928
802	.1952	.6201	.0449	.4697	.8945	.3193	.7441	.1689	.5937	.0185	.4433	.8681	.2929
424805	10.1953	10.6201	11.0449	11.4697	11.8945	12.3193	12.7442	13.1690	13.5938	14.0186	14.4434	14.8682	15.2930
808	.1954	.6202	.0450	.4698	.8946	.3194	.7442	.1690	.5939	.0187	.4435	.8683	.2931
811	.1955	.6203	.0451	.4699	.8947	.3195	.7443	.1691	.5940	.0188	.4436	.8684	.2932
814	.1955	.6204	.0452	.4700	.8948	.3196	.7444	.1692	.5940	.0189	.4437	.8685	.2933
817	.1956	.6204	.0452	.4701	.8949	.3197	.7445	.1693	.5941	.0190	.4438	.8686	.2934
424820	10.1957	10.6205	11.0453	11.4701	11.8950	12.3198	12.7446	13.1694	13.5942	14.0191	14.4439	14.8687	15.2935
823	.1958	.6206	.0454	.4702	.8950	.3199	.7447	.1695	.5943	.0192	.4440	.8688	.2936
826	.1958	.6207	.0455	.4703	.8951	.3200	.7448	.1696	.5944	.0193	.4441	.8689	.2937
829	.1959	.6207	.0456	.4704	.8952	.3200	.7449	.1697	.5945	.0194	.4442	.8690	.2938
832	.1960	.6208	.0456	.4705	.8953	.3201	.7450	.1698	.5946	.0195	.4443	.8691	.2940
424835	10.1960	10.6209	11.0457	11.4705	11.8954	12.3202	12.7451	13.1699	13.5947	14.0196	14.4444	14.8692	15.2941
838	.1961	.6210	.0458	.4706	.8955	.3203	.7451	.1700	.5948	.0197	.4445	.8693	.2942
841	.1962	.6210	.0459	.4707	.8955	.3204	.7452	.1701	.5949	.0198	.4446	.8694	.2943
844	.1963	.6211	.0459	.4708	.8956	.3205	.7453	.1702	.5950	.0199	.4447	.8695	.2944
847	.1963	.6212	.0460	.4709	.8957	.3206	.7454	.1703	.5951	.0200	.4448	.8696	.2945
424850	10.1964	10.6213	11.0461	11.4710	11.8958	12.3207	12.7455	13.1704	13.5952	14.0201	14.4449	14.8698	15.2946
853	.1965	.6213	.0462	.4710	.8959	.3207	.7456	.1704	.5953	.0201	.4450	.8699	.2747
856	.1965	.6214	.0463	.4711	.8960	.3208	.7457	.1705	.5954	.0202	.4451	.8700	.2948
859	.1966	.6215	.0463	.4712	.8961	.3209	.7458	.1706	.5955	.0203	.4452	.8701	.2949
862	.1967	.6216	.0464	.4713	.8961	.3210	.7459	.1707	.5956	.0204	.4453	.8702	.2950
424865	10.1968	10.6216	11.0465	11.4714	11.8962	12.3211	12.7460	13.1708	13.5957	14.0205	14.4454	14.8703	15.2951
868	.1968	.6217	.0466	.4714	.8963	.3212	.7460	.1709	.5958	.0206	.4455	.8704	.2952
871	.1969	.6218	.0466	.4715	.8964	.3213	.7461	.1710	.5959	.0207	.4456	.8705	.2954
874	.1970	.6219	.0467	.4716	.8965	.3213	.7462	.1711	.5960	.0208	.4457	.8706	.2955
877	.1970	.6219	.0468	.4717	.8966	.3214	.7463	.1712	.5961	.0209	.4458	.8707	.2956
424880	10.1971	10.6220	11.0469	11.4718	11.8966	12.3215	12.7464	13.1713	13.5962	14.0210	14.4459	14.8708	15.2957
883	.1972	.6221	.0470	.4718	.8967	.3216	.7465	.1714	.5963	.0211	.4460	.8709	.2958
886	.1973	.6222	.0470	.4719	.8968	.3217	.7466	.1715	.5964	.0212	.4461	.8710	.2959
889	.1973	.6222	.0471	.4720	.8969	.3218	.7467	.1716	.5964	.0213	.4462	.8711	.2960
892	.1974	.6223	.0472	.4721	.8970	.3219	.7468	.1717	.5965	.0214	.4463	.8712	.2961
424895	10.1975	10.6224	11.0473	11.4722	11.8971	12.3220	12.7469	13.1717	13.5966	14.0215	14.4464	14.8713	15.2962
898	.1976	.6225	.0473	.4722	.8971	.3220	.7469	.1718	.5967	.0216	.4465	.8714	.2963
901	.1976	.6225	.0474	.4723	.8972	.3221	.7470	.1719	.5968	.0217	.4466	.8715	.2964
904	.1977	.6226	.0475	.4724	.8973	.3222	.7471	.1720	.5969	.0218	.4467	.8716	.2965
907	.1978	.6227	.0476	.4725	.8974	.3223	.7472	.1721	.5970	.0219	.4468	.8717	.2967
424910	10.1978	10.6228	11.0477	11.4726	11.8975	12.3224	12.7473	13.1722	13.5971	14.0220	14.4469	14.8719	15.2968
913	.1979	.6228	.0477	.4727	.8976	.3225	.7474	.1723	.5972	.0221	.4470	.8720	.2969
916	.1980	.6229	.0478	.4727	.8976	.3226	.7475	.1724	.5973	.0222	.4471	.8721	.2970
919	.1981	.6230	.0479	.4728	.8977	.3227	.7476	.1725	.5974	.0223	.4472	.8722	.2971
922	.1981	.6231	.0480	.4729	.8978	.3227	.7477	.1726	.5975	.0224	.4473	.8723	.2972
424925	10.1982	10.6231	11.0481	11.4730	11.8979	12.3228	12.7478	13.1727	13.5976	14.0225	14.4475	14.8724	15.2973
928	.1983	.6232	.0481	.4731	.8980	.3229	.7478	.1728	.5977	.0226	.4476	.8725	.2974
931	.1983	.6233	.0482	.4731	.8981	.3230	.7479	.1729	.5978	.0227	.4477	.8726	.2975
934	.1984	.6234	.0483	.4732	.8982	.3231	.7480	.1730	.5979	.0228	.4478	.8727	.2976
937	.1985	.6234	.0484	.4733	.8982	.3232	.7481	.1730	.5980	.0229	.4479	.8728	.2977
424940	10.1986	10.6235	11.0484	11.4734	11.8983	12.3233	12.7482	13.1731	13.5981	14.0230	14.4480	14.8729	15.2978
943	.1986	.6236	.0485	.4735	.8984	.3233	.7483	.1732	.5982	.0231	.4481	.8730	.2979
946	.1987	.6237	.0486	.4735	.8985	.3234	.7484	.1733	.5983	.0232	.4482	.8731	.2981
949	.1988	.6237	.0487	.4736	.8986	.3235	.7485	.1734	.5984	.0233	.4483	.8732	.2982
952	.1988	.6238	.0488	.4737	.8987	.3236	.7486	.1735	.5985	.0234	.4484	.8733	.2983
424955	10.1989	10.6239	11.0488	11.4738	11.8987	12.3237	12.7487	13.1736	13.5986	14.0235	14.4485	14.8734	15.2984
958	.1990	.6240	.0489	.4739	.8988	.3238	.7487	.1737	.5987	.0236	.4486	.8735	.2985
961	.1991	.6240	.0490	.4739	.8989	.3239	.7488	.1738	.5988	.0237	.4487	.8736	.2986
964	.1991	.6241	.0491	.4740	.8990	.3240	.7489	.1739	.5988	.0238	.4488	.8737	.2987
967	.1992	.6242	.0491	.4741	.8991	.3240	.7490	.1740	.5989	.0239	.4489	.8738	.2988
424970	10.1993	10.6243	11.0492	11.4742	11.8992	12.3241	12.7491	13.1741	13.5990	14.0240	14.4490	14.8740	15.2989
973	.1994	.6243	.0493	.4743	.8992	.3242	.7492	.1742	.5991	.0241	.4491	.8741	.2990
976	.1994	.6244	.0494	.4744	.8993	.3243	.7493	.1743	.5992	.0242	.4492	.8742	.2991
979	.1995	.6245	.0495	.4744	.8994	.3244	.7494	.1743	.5993	.0243	.4493	.8743	.2992
982	.1996	.6246	.0495	.4745	.8995	.3245	.7495	.1744	.5994	.0244	.4494	.8744	.2994
424985	10.1996	10.6246	11.0496	11.4746	11.8996	12.3246	12.7496	13.1745	13.5995	14.0245	14.4495	14.8745	15.2995
988	.1997	.6247	.0497	.4747	.8997	.3247	.7496	.1746	.5996	.0246	.4496	.8746	.2996
991	.1998	.6248	.0498	.4748	.8997	.3247	.7497	.1747	.5997	.0247	.4497	.8747	.2997
994	.1999	.6249	.0498	.4748	.8998	.3248	.7498	.1748	.5998	.0248	.4498	.8748	.2998
997	.1999	.6249	.0499	.4749	.8999	.3249	.7499	.1749	.5999	.0249	.4499	.8749	.2999
425000	10.2000	10.6250	11.0500	11.4750	11.9000	12.3250	12.7500	13.1750	13.6000	14.0250	14.4500	14.8750	15.3000

MEGACYCLES PER SECOND

HARMONICS

BASIC FREQ.	37	38	39	40	41	42	43	44	45	46	47	48	50
424700	15.7139	16.1386	16.5633	16.9880	17.4127	17.8374	18.2621	18.6868	19.1115	19.5362	19.9609	20.3856	21.2350
703	.7140	.1387	.5634	.9881	.4128	.8375	.2622	.6869	.1116	.5363	.9610	.3857	.2352
706	.7141	.1388	.5635	.9882	.4129	.8377	.2624	.6871	.1118	.5365	.9612	.3859	.2353
709	.7142	.1389	.5637	.9884	.4131	.8378	.2625	.6872	.1119	.5366	.9613	.3860	.2355
712	.7143	.1391	.5638	.9885	.4132	.8379	.2626	.6873	.1120	.5368	.9615	.3862	.2356
424715	15.7145	16.1392	16.5639	16.9886	17.4133	17.8380	18.2627	18.6875	19.1122	19.5369	19.9616	20.3863	21.2358
718	.7146	.1393	.5640	.9887	.4134	.8382	.2629	.6876	.1123	.5370	.9617	.3865	.2359
721	.7147	.1394	.5641	.9888	.4136	.8383	.2630	.6877	.1124	.5372	.9619	.3866	.2361
724	.7148	.1395	.5642	.9890	.4137	.8384	.2631	.6879	.1126	.5373	.9620	.3868	.2362
727	.7149	.1396	.5644	.9891	.4138	.8385	.2633	.6880	.1127	.5374	.9622	.3869	.2364
424730	15.7150	16.1397	16.5645	16.9892	17.4139	17.8387	18.2634	18.6881	19.1129	19.5376	19.9623	20.3870	21.2365
733	.7151	.1399	.5646	.9893	.4141	.8388	.2635	.6883	.1130	.5377	.9625	.3872	.2367
736	.7152	.1400	.5647	.9894	.4142	.8389	.2636	.6884	.1131	.5379	.9626	.3873	.2368
739	.7153	.1401	.5648	.9896	.4143	.8390	.2638	.6885	.1133	.5380	.9627	.3875	.2370
742	.7155	.1402	.5649	.9897	.4144	.8392	.2639	.6886	.1134	.5381	.9629	.3876	.2371
424745	15.7156	16.1403	16.5651	16.9898	17.4145	17.8393	18.2640	18.6888	19.1135	19.5383	19.9630	20.3878	21.2373
748	.7157	.1404	.5652	.9899	.4147	.8394	.2642	.6889	.1137	.5384	.9632	.3879	.2374
751	.7158	.1405	.5653	.9900	.4148	.8395	.2643	.6890	.1138	.5385	.9633	.3880	.2376
754	.7159	.1407	.5654	.9902	.4149	.8397	.2644	.6892	.1139	.5387	.9634	.3882	.2377
757	.7160	.1408	.5655	.9903	.4150	.8398	.2646	.6893	.1141	.5388	.9636	.3883	.2379
424760	15.7161	16.1409	16.5656	16.9904	17.4152	17.8399	18.2647	18.6894	19.1142	19.5390	19.9637	20.3885	21.2380
763	.7162	.1410	.5658	.9905	.4153	.8400	.2648	.6896	.1143	.5391	.9639	.3886	.2382
766	.7163	.1411	.5659	.9906	.4154	.8402	.2649	.6897	.1145	.5392	.9640	.3888	.2383
769	.7165	.1412	.5660	.9908	.4155	.8403	.2651	.6898	.1146	.5394	.9641	.3889	.2385
772	.7166	.1413	.5661	.9909	.4157	.8404	.2652	.6900	.1147	.5395	.9643	.3891	.2386
424775	15.7167	16.1415	16.5662	16.9910	17.4158	17.8406	18.2653	18.6901	19.1149	19.5397	19.9644	20.3892	21.2388
778	.7168	.1416	.5663	.9911	.4159	.8407	.2655	.6902	.1150	.5398	.9646	.3893	.2389
781	.7169	.1417	.5665	.9912	.4160	.8408	.2656	.6904	.1151	.5399	.9647	.3895	.2391
784	.7170	.1418	.5666	.9914	.4161	.8409	.2657	.6905	.1153	.5401	.9648	.3896	.2392
787	.7171	.1419	.5667	.9915	.4163	.8411	.2658	.6906	.1154	.5402	.9650	.3898	.2394
424790	15.7172	16.1420	16.5668	16.9916	17.4164	17.8412	18.2660	18.6908	19.1156	19.5403	19.9651	20.3899	21.2395
793	.7173	.1421	.5669	.9917	.4165	.8413	.2661	.6909	.1157	.5405	.9653	.3901	.2397
796	.7175	.1422	.5670	.9918	.4166	.8414	.2662	.6910	.1158	.5406	.9654	.3902	.2398
799	.7176	.1424	.5672	.9920	.4168	.8416	.2664	.6912	.1160	.5408	.9656	.3904	.2400
802	.7177	.1425	.5673	.9921	.4169	.8417	.2665	.6913	.1161	.5409	.9657	.3905	.2401
424805	15.7178	16.1426	16.5674	16.9922	17.4170	17.8418	18.2666	18.6914	19.1162	19.5410	19.9658	20.3906	21.2403
808	.7179	.1427	.5675	.9923	.4171	.8419	.2667	.6916	.1164	.5412	.9660	.3908	.2404
811	.7180	.1428	.5676	.9924	.4173	.8421	.2669	.6917	.1165	.5413	.9661	.3909	.2406
814	.7181	.1429	.5677	.9926	.4174	.8422	.2670	.6918	.1166	.5414	.9663	.3911	.2407
817	.7182	.1430	.5679	.9927	.4175	.8423	.2671	.6919	.1168	.5416	.9664	.3912	.2409
424820	15.7183	16.1432	16.5680	16.9928	17.4176	17.8424	18.2673	18.6921	19.1169	19.5417	19.9665	20.3914	21.2410
823	.7185	.1433	.5681	.9929	.4177	.8426	.2674	.6922	.1170	.5419	.9667	.3915	.2412
826	.7186	.1434	.5682	.9930	.4179	.8427	.2675	.6923	.1172	.5420	.9668	.3916	.2413
829	.7187	.1435	.5683	.9932	.4180	.8428	.2676	.6925	.1173	.5421	.9670	.3918	.2415
832	.7188	.1436	.5684	.9933	.4181	.8429	.2678	.6926	.1174	.5423	.9671	.3919	.2416
424835	15.7189	16.1437	16.5686	16.9934	17.4182	17.8431	18.2679	18.6927	19.1176	19.5424	19.9672	20.3921	21.2418
838	.7190	.1438	.5687	.9935	.4184	.8432	.2680	.6929	.1177	.5425	.9674	.3922	.2419
841	.7191	.1440	.5688	.9936	.4185	.8433	.2682	.6930	.1178	.5427	.9675	.3924	.2421
844	.7192	.1441	.5689	.9938	.4186	.8434	.2683	.6931	.1180	.5428	.9677	.3925	.2422
847	.7193	.1442	.5690	.9939	.4187	.8436	.2684	.6933	.1181	.5430	.9678	.3927	.2424
424850	15.7195	16.1443	16.5692	16.9940	17.4189	17.8437	18.2686	18.6934	19.1183	19.5431	19.9680	20.3928	21.2425
853	.7196	.1444	.5693	.9941	.4190	.8438	.2687	.6935	.1184	.5432	.9681	.3929	.2427
856	.7197	.1445	.5694	.9942	.4191	.8440	.2688	.6937	.1185	.5434	.9682	.3931	.2428
859	.7198	.1446	.5695	.9944	.4192	.8441	.2689	.6938	.1187	.5435	.9684	.3932	.2430
862	.7199	.1448	.5696	.9945	.4193	.8442	.2691	.6939	.1188	.5437	.9685	.3934	.2431
424865	15.7200	16.1449	16.5697	16.9946	17.4195	17.8443	18.2692	18.6941	19.1189	19.5438	19.9687	20.3935	21.2433
868	.7201	.1450	.5699	.9947	.4196	.8445	.2693	.6942	.1191	.5439	.9688	.3937	.2434
871	.7202	.1451	.5700	.9948	.4197	.8446	.2695	.6943	.1192	.5441	.9689	.3938	.2436
874	.7203	.1452	.5701	.9950	.4198	.8447	.2696	.6945	.1193	.5442	.9691	.3940	.2437
877	.7204	.1453	.5702	.9951	.4200	.8448	.2697	.6946	.1195	.5443	.9692	.3941	.2439
424880	15.7206	16.1454	16.5703	16.9952	17.4201	17.8450	18.2698	18.6947	19.1196	19.5445	19.9694	20.3942	21.2440
883	.7207	.1456	.5704	.9953	.4202	.8451	.2700	.6949	.1197	.5446	.9695	.3944	.2442
886	.7208	.1457	.5706	.9954	.4203	.8452	.2701	.6950	.1199	.5448	.9696	.3945	.2443
889	.7209	.1458	.5707	.9956	.4204	.8453	.2702	.6951	.1200	.5449	.9698	.3947	.2445
892	.7210	.1459	.5708	.9957	.4206	.8455	.2704	.6952	.1201	.5450	.9699	.3948	.2446
424895	15.7211	16.1460	16.5709	16.9958	16.4207	17.8456	18.2705	18.6954	19.1203	19.5452	19.9701	20.3950	21.2448
898	.7212	.1461	.5710	.9959	.4208	.8457	.2706	.6955	.1204	.5453	.9702	.3951	.2449
901	.7213	.1462	.5711	.9960	.4209	.8458	.2707	.6956	.1205	.5454	.9703	.3952	.2451
904	.7214	.1464	.5713	.9962	.4211	.8460	.2709	.6958	.1207	.5456	.9705	.3954	.2452
907	.7216	.1465	.5714	.9963	.4212	.8461	.2710	.6959	.1208	.5457	.9706	.3955	.2454
424910	15.7217	16.1466	16.5715	16.9964	17.4213	17.8462	18.2711	18.6960	19.1210	19.5459	19.9708	20.3957	21.2455
913	.7218	.1467	.5716	.9965	.4214	.8463	.2713	.6962	.1211	.5460	.9709	.3958	.2457
916	.7219	.1468	.5717	.9966	.4216	.8465	.2714	.6963	.1212	.5461	.9711	.3960	.2458
919	.7220	.1469	.5718	.9968	.4217	.8466	.2715	.6964	.1214	.5463	.9712	.3961	.2460
922	.7221	.1470	.5720	.9969	.4218	.8467	.2716	.6966	.1215	.5464	.9713	.3963	.2461
424925	15.7222	16.1472	16.5721	16.9970	17.4219	17.8469	18.2718	18.6967	19.1216	19.5466	19.9715	20.3964	21.2463
928	.7223	.1473	.5722	.9971	.4220	.8470	.2719	.6968	.1218	.5467	.9716	.3965	.2464
931	.7224	.1474	.5723	.9972	.4222	.8471	.2720	.6970	.1219	.5468	.9718	.3967	.2466
934	.7226	.1475	.5724	.9974	.4223	.8472	.2722	.6971	.1220	.5470	.9719	.3968	.2467
937	.7227	.1476	.5725	.9975	.4224	.8474	.2723	.6972	.1222	.5471	.9720	.3970	.2469
424940	15.7228	16.1477	16.5727	16.9976	17.4225	17.8475	18.2724	18.6974	19.1223	19.5472	19.9722	20.3971	21.2470
943	.7229	.1478	.5728	.9977	.4227	.8476	.2725	.6975	.1224	.5474	.9723	.3973	.2472
946	.7230	.1479	.5729	.9978	.4228	.8477	.2727	.6976	.1226	.5475	.9725	.3974	.2473
949	.7231	.1481	.5730	.9980	.4229	.8479	.2728	.6978	.1227	.5477	.9726	.3976	.2475
952	.7232	.1482	.5731	.9981	.4230	.8480	.2729	.6979	.1228	.5478	.9727	.3977	.2476
424955	15.7233	16.1483	16.5732	16.9982	17.4232	17.8481	18.2731	18.6980	19.1230	19.5479	19.9729	20.3978	21.2478
958	.7234	.1484	.5734	.9983	.4233	.8482	.2732	.6982	.1231	.5481	.9730	.3980	.2479
961	.7236	.1485	.5735	.9984	.4234	.8484	.2733	.6983	.1232	.5482	.9732	.3981	.2481
964	.7237	.1486	.5736	.9986	.4235	.8485	.2735	.6984	.1234	.5483	.9733	.3983	.2482
967	.7238	.1487	.5737	.9987	.4236	.8486	.2736	.6985	.1235	.5485	.9734	.3984	.2484
424970	15.7239	16.1489	16.5738	16.9988	17.4238	17.8487	18.2737	18.6987	19.1237	19.5486	19.9736	20.3986	21.2485
973	.7240	.1490	.5739	.9989	.4239	.8489	.2738	.6988	.1238	.5488	.9737	.3987	.2487
976	.7241	.1491	.5741	.9990	.4240	.8490	.2740	.6989	.1239	.5489	.9739	.3988	.2488
979	.7242	.1492	.5742	.9992	.4241	.8491	.2741	.6991	.1241	.5490	.9740	.3990	.2490
982	.7243	.1493	.5743	.9993	.4243	.8492	.2742	.6992	.1242	.5492	.9742	.3991	.2491
424985	15.7244	16.1494	16.5744	16.9994	17.4244	17.8494	18.2744	18.6993	19.1243	19.5493	19.9743	20.3993	21.2493
988	.7246	.1495	.5745	.9995	.4245	.8495	.2745	.6995	.1245	.5494	.9744	.3994	.2494
991	.7247	.1497	.5746	.9996	.4246	.8496	.2746	.6996	.1246	.5496	.9746	.3996	.2496
994	.7248	.1498	.5748	.9998	.4248	.8497	.2747	.6997	.1247	.5497	.9747	.3997	.2497
997	.7249	.1499	.5749	.9999	.4249	.8499	.2749	.6999	.1249	.5499	.9749	.3999	.2499
425000	15.7250	16.1500	16.5750	17.0000	17.4250	17.8500	18.2750	18.7000	19.1250	19.5500	19.9750	20.4000	21.2500

H A R M O N I C S

BASIC FREQ.	24	25	26	27	28	29	30	31	32	33	34	35	36
425000	10.2000	10.6250	11.0500	11.4750	11.9000	12.3250	12.7500	13.1750	13.6000	14.0250	14.4500	14.8750	15.3000
003	.2001	.6251	.0501	.4751	.9001	.3251	.7501	.1751	.6001	.0251	.4501	.8751	.3001
006	.2001	.6252	.0502	.4752	.9002	.3252	.7502	.1752	.6002	.0252	.4502	.8752	.3002
009	.2002	.6252	.0502	.4752	.9003	.3253	.7503	.1753	.6003	.0253	.4503	.8753	.3003
012	.2003	.6253	.0503	.4753	.9003	.3253	.7504	.1754	.6004	.0254	.4504	.8754	.3004
425015	10.2004	10.6254	11.0504	11.4754	11.9004	12.3254	12.7505	13.1755	13.6005	14.0255	14.4505	14.8755	15.3005
018	.2004	.6255	.0505	.4755	.9005	.3255	.7505	.1756	.6006	.0256	.4506	.8756	.3006
021	.2005	.6255	.0505	.4756	.9006	.3256	.7506	.1757	.6007	.0257	.4507	.8757	.3008
024	.2006	.6256	.0506	.4756	.9007	.3257	.7507	.1757	.6008	.0258	.4508	.8758	.3009
027	.2006	.6257	.0507	.4757	.9008	.3258	.7508	.1758	.6009	.0259	.4509	.8759	.3010
425030	10.2007	10.6258	11.0508	11.4758	11.9008	12.3259	12.7509	13.1759	13.6010	14.0260	14.4510	14.8761	15.3011
033	.2008	.6258	.0509	.4759	.9009	.3260	.7510	.1760	.6011	.0261	.4511	.8762	.3012
036	.2009	.6259	.0509	.4760	.9010	.3260	.7511	.1761	.6012	.0262	.4512	.8763	.3013
039	.2009	.6260	.0510	.4761	.9011	.3261	.7512	.1762	.6012	.0263	.4513	.8764	.3014
042	.2010	.6261	.0511	.4761	.9012	.3262	.7513	.1763	.6013	.0264	.4514	.8765	.3015
425045	10.2011	10.6261	11.0512	11.4762	11.9013	12.3263	12.7514	13.1764	13.6014	14.0265	14.4515	14.8766	15.3016
048	.2012	.6262	.0512	.4763	.9013	.3264	.7514	.1765	.6015	.0266	.4516	.8767	.3017
051	.2012	.6263	.0513	.4764	.9014	.3265	.7515	.1766	.6016	.0267	.4517	.8768	.3018
054	.2013	.6264	.0514	.4765	.9015	.3266	.7516	.1767	.6017	.0268	.4518	.8769	.3019
057	.2014	.6264	.0515	.4765	.9016	.3267	.7517	.1768	.6018	.0269	.4519	.8770	.3021
425060	10.2014	10.6265	11.0516	11.4766	11.9017	12.3267	12.7518	13.1769	13.6019	14.0270	14.4520	14.8771	15.3022
063	.2015	.6266	.0516	.4767	.9018	.3268	.7519	.1770	.6020	.0271	.4521	.8772	.3023
066	.2016	.6267	.0517	.4768	.9018	.3269	.7520	.1770	.6021	.0272	.4522	.8773	.3024
069	.2017	.6267	.0518	.4769	.9019	.3270	.7521	.1771	.6022	.0273	.4523	.8774	.3025
072	.2017	.6268	.0519	.4769	.9020	.3271	.7522	.1772	.6023	.0274	.4524	.8775	.3026
425075	10.2018	10.6269	11.0520	11.4770	11.9021	12.3272	12.7523	13.1773	13.6024	14.0275	14.4526	14.8776	15.3027
078	.2019	.6270	.0520	.4771	.9022	.3273	.7523	.1774	.6025	.0276	.4527	.8777	.3028
081	.2019	.6270	.0521	.4772	.9023	.3273	.7524	.1775	.6026	.0277	.4528	.8778	.3029
084	.2020	.6271	.0522	.4773	.9024	.3274	.7525	.1776	.6027	.0278	.4529	.8779	.3030
087	.2021	.6272	.0523	.4773	.9024	.3275	.7526	.1777	.6028	.0279	.4530	.8780	.3031
425090	10.2022	10.6273	11.0523	11.4774	11.9025	12.3276	12.7527	13.1778	13.6029	14.0280	14.4531	14.8782	15.3032
093	.2022	.6273	.0524	.4775	.9026	.3277	.7528	.1779	.6030	.0281	.4532	.8783	.3033
096	.2023	.6274	.0525	.4776	.9027	.3278	.7529	.1780	.6031	.0282	.4533	.8784	.3035
099	.2024	.6275	.0526	.4777	.9028	.3279	.7530	.1781	.6032	.0283	.4534	.8785	.3036
102	.2024	.6276	.0527	.4778	.9029	.3280	.7531	.1782	.6033	.0284	.4535	.8786	.3037
425105	10.2025	10.6276	11.0527	11.4778	11.9029	12.3280	12.7532	13.1783	13.6034	14.0285	14.4536	14.8787	15.3038
108	.2026	.6277	.0528	.4779	.9030	.3281	.7532	.1783	.6035	.0286	.4537	.8788	.3039
111	.2027	.6278	.0529	.4780	.9031	.3282	.7533	.1784	.6036	.0287	.4538	.8789	.3040
114	.2027	.6279	.0530	.4781	.9032	.3283	.7534	.1785	.6036	.0288	.4539	.8790	.3041
117	.2028	.6279	.0530	.4782	.9033	.3284	.7535	.1786	.6037	.0289	.4540	.8791	.3042
425120	10.2029	10.6280	11.0531	11.4782	11.9034	12.3285	12.7536	13.1787	13.6038	14.0290	14.4541	14.8792	15.3043
123	.2030	.6281	.0532	.4783	.9034	.3286	.7537	.1788	.6039	.0291	.4542	.8793	.3044
126	.2030	.6282	.0533	.4784	.9035	.3287	.7538	.1789	.6040	.0292	.4543	.8794	.3045
129	.2031	.6282	.0534	.4785	.9036	.3287	.7539	.1790	.6041	.0293	.4544	.8795	.3046
132	.2032	.6283	.0534	.4786	.9037	.3288	.7540	.1791	.6042	.0294	.4545	.8796	.3048
425135	10.2032	10.6284	11.0535	11.4786	11.9038	12.3289	12.7541	13.1792	13.6043	14.0295	14.4546	14.8797	15.3049
138	.2033	.6285	.0536	.4787	.9039	.3290	.7541	.1793	.6044	.0296	.4547	.8798	.3050
141	.2034	.6285	.0537	.4788	.9039	.3291	.7542	.1794	.6045	.0297	.4548	.8799	.3051
144	.2035	.6286	.0537	.4789	.9040	.3292	.7543	.1795	.6046	.0298	.4549	.8800	.3052
147	.2035	.6287	.0538	.4790	.9041	.3293	.7544	.1796	.6047	.0299	.4550	.8801	.3053
425150	10.2036	10.6288	11.0539	11.4791	11.9042	12.3294	12.7545	13.1797	13.6048	14.0300	14.4551	14.8803	15.3054
153	.2037	.6288	.0540	.4791	.9043	.3294	.7546	.1797	.6049	.0300	.4552	.8804	.3055
156	.2037	.6289	.0541	.4792	.9044	.3295	.7547	.1798	.6050	.0301	.4553	.8805	.3056
159	.2038	.6290	.0541	.4793	.9045	.3296	.7548	.1799	.6051	.0302	.4554	.8806	.3057
162	.2039	.6291	.0542	.4794	.9045	.3297	.7549	.1800	.6052	.0303	.4555	.8807	.3058
425165	10.2040	10.6291	11.0543	11.4795	11.9046	12.3298	12.7550	13.1801	13.6053	14.0304	14.4556	14.8808	15.3059
168	.2040	.6292	.0544	.4795	.9047	.3299	.7550	.1802	.6054	.0305	.4557	.8809	.3060
171	.2041	.6293	.0544	.4796	.9048	.3300	.7551	.1803	.6055	.0306	.4558	.8810	.3062
174	.2042	.6294	.0545	.4797	.9049	.3300	.7552	.1804	.6056	.0307	.4559	.8811	.3063
177	.2042	.6294	.0546	.4798	.9050	.3301	.7553	.1805	.6057	.0308	.4560	.8812	.3064
425180	10.2043	10.6295	11.0547	11.4799	11.9050	12.3302	12.7554	13.1806	13.6058	14.0309	14.4561	14.8813	15.3065
183	.2044	.6296	.0548	.4799	.9051	.3303	.7555	.1807	.6059	.0310	.4562	.8814	.3066
186	.2045	.6297	.0548	.4800	.9052	.3304	.7556	.1808	.6060	.0311	.4563	.8815	.3067
189	.2045	.6297	.0549	.4801	.9053	.3305	.7557	.1809	.6060	.0312	.4564	.8816	.3068
192	.2046	.6298	.0550	.4802	.9054	.3306	.7558	.1810	.6061	.0313	.4565	.8817	.3069
425195	10.2047	10.6299	11.0551	11.4803	11.9055	12.3307	12.7559	13.1810	13.6062	14.0314	14.4566	14.8818	15.3070
198	.2048	.6300	.0551	.4803	.9055	.3307	.7559	.1811	.6063	.0315	.4567	.8819	.3071
201	.2048	.6300	.0552	.4804	.9056	.3308	.7560	.1812	.6064	.0316	.4568	.8820	.3072
204	.2049	.6301	.0553	.4805	.9057	.3309	.7561	.1813	.6065	.0317	.4569	.8821	.3073
207	.2050	.6302	.0554	.4806	.9058	.3310	.7562	.1814	.6066	.0318	.4570	.8822	.3075
425210	10.2050	10.6303	11.0555	11.4807	11.9059	12.3311	12.7563	13.1815	13.6067	14.0319	14.4571	14.8824	15.3076
213	.2051	.6303	.0555	.4808	.9060	.3312	.7564	.1816	.6068	.0320	.4572	.8825	.3077
216	.2052	.6304	.0556	.4808	.9060	.3313	.7565	.1817	.6069	.0321	.4573	.8826	.3078
219	.2053	.6305	.0557	.4809	.9061	.3314	.7566	.1818	.6070	.0322	.4574	.8827	.3079
222	.2053	.6306	.0558	.4810	.9062	.3314	.7567	.1819	.6071	.0323	.4575	.8828	.3080
425225	10.2054	10.6306	11.0559	11.4811	11.9063	12.3315	12.7568	13.1820	13.6072	14.0324	14.4577	14.8829	15.3081
228	.2055	.6307	.0559	.4812	.9064	.3316	.7568	.1821	.6073	.0325	.4578	.8830	.3082
231	.2055	.6308	.0560	.4812	.9065	.3317	.7569	.1822	.6074	.0326	.4579	.8831	.3083
234	.2056	.6309	.0561	.4813	.9066	.3318	.7570	.1823	.6075	.0327	.4580	.8832	.3084
237	.2057	.6309	.0562	.4814	.9066	.3319	.7571	.1823	.6076	.0328	.4581	.8833	.3085
425240	10.2058	10.6310	11.0562	11.4815	11.9067	12.3320	12.7572	13.1824	13.6077	14.0329	14.4582	14.8834	15.3086
243	.2058	.6311	.0563	.4816	.9068	.3320	.7573	.1825	.6078	.0330	.4583	.8835	.3087
246	.2059	.6312	.0564	.4816	.9069	.3321	.7574	.1826	.6079	.0331	.4584	.8836	.3089
249	.2060	.6312	.0565	.4817	.9070	.3322	.7575	.1827	.6080	.0332	.4585	.8837	.3090
252	.2060	.6313	.0566	.4818	.9071	.3323	.7576	.1828	.6081	.0333	.4586	.8838	.3091
425255	10.2061	10.6314	11.0566	11.4819	11.9071	12.3324	12.7577	13.1829	13.6082	14.0334	14.4587	14.8839	15.3092
258	.2062	.6315	.0567	.4820	.9072	.3325	.7577	.1830	.6083	.0335	.4588	.8840	.3093
261	.2063	.6315	.0568	.4820	.9073	.3326	.7578	.1831	.6084	.0336	.4589	.8841	.3094
264	.2063	.6316	.0569	.4821	.9074	.3327	.7579	.1832	.6084	.0337	.4590	.8842	.3095
267	.2064	.6317	.0569	.4822	.9075	.3327	.7580	.1833	.6085	.0338	.4591	.8843	.3096
425270	10.2065	10.6318	11.0570	11.4823	11.9076	12.3328	12.7581	13.1834	13.6086	14.0339	14.4592	14.8845	15.3097
273	.2066	.6318	.0571	.4824	.9076	.3329	.7582	.1835	.6087	.0340	.4593	.8846	.3098
276	.2066	.6319	.0572	.4825	.9077	.3330	.7583	.1836	.6088	.0341	.4594	.8847	.3099
279	.2067	.6320	.0573	.4825	.9078	.3331	.7584	.1836	.6089	.0342	.4595	.8848	.3100
282	.2068	.6321	.0573	.4826	.9079	.3332	.7585	.1837	.6090	.0343	.4596	.8849	.3102
425285	10.2068	10.6321	11.0574	11.4827	11.9080	12.3333	12.7586	13.1838	13.6091	14.0344	14.4597	14.8850	15.3103
288	.2069	.6322	.0575	.4828	.9081	.3334	.7586	.1839	.6092	.0345	.4598	.8851	.3104
291	.2070	.6323	.0576	.4829	.9081	.3334	.7587	.1840	.6093	.0346	.4599	.8852	.3105
294	.2071	.6324	.0576	.4829	.9082	.3335	.7588	.1841	.6094	.0347	.4600	.8853	.3106
297	.2071	.6324	.0577	.4830	.9083	.3336	.7589	.1842	.6095	.0348	.4601	.8854	.3107
425300	10.2072	10.6325	11.0578	11.4831	11.9084	12.3337	12.7590	13.1843	13.6096	14.0349	14.4602	14.8855	15.3108

MEGACYCLES PER SECOND

HARMONICS

BASIC FREQ.	37	38	39	40	41	42	43	44	45	46	47	48	50
425000	15.7250	16.1500	16.5750	17.0000	17.4250	17.8500	18.2750	18.7000	19.1250	19.5500	19.9750	20.4000	21.2500
003	.7251	.1501	.5751	.0001	.4251	.8501	.2751	.7001	.1251	.5501	.9751	.4001	.2502
006	.7252	.1502	.5752	.0002	.4252	.8503	.2753	.7003	.1253	.5503	.9753	.4003	.2503
009	.7253	.1503	.5754	.0004	.4254	.8504	.2754	.7004	.1254	.5504	.9754	.4004	.2505
012	.7254	.1505	.5755	.0005	.4255	.8505	.2755	.7005	.1255	.5506	.9756	.4006	.2506
425015	15.7256	16.1506	16.5756	17.0006	17.4256	17.8506	18.2756	18.7007	19.1257	19.5507	19.9757	20.4007	21.2508
018	.7257	.1507	.5757	.0007	.4257	.8508	.2758	.7008	.1258	.5508	.9758	.4009	.2509
021	.7258	.1508	.5758	.0008	.4259	.8509	.2759	.7009	.1259	.5510	.9760	.4010	.2511
024	.7259	.1509	.5759	.0010	.4260	.8510	.2760	.7011	.1261	.5511	.9761	.4012	.2512
027	.7260	.1510	.5761	.0011	.4261	.8511	.2762	.7012	.1262	.5512	.9763	.4013	.2514
425030	15.7261	16.1511	16.5762	17.0012	17.4262	17.8513	18.2763	18.7013	19.1264	19.5514	19.9764	20.4014	21.2515
033	.7262	.1513	.5763	.0013	.4264	.8514	.2764	.7015	.1265	.5515	.9766	.4016	.2517
036	.7263	.1514	.5764	.0014	.4265	.8515	.2765	.7016	.1266	.5517	.9767	.4017	.2518
039	.7264	.1515	.5765	.0016	.4266	.8516	.2767	.7017	.1268	.5518	.9768	.4019	.2520
042	.7266	.1516	.5766	.0017	.4267	.8518	.2768	.7018	.1269	.5519	.9770	.4020	.2521
425045	15.7267	16.1517	16.5768	17.0018	17.4268	17.8519	18.2769	18.7020	19.1270	19.5521	19.9771	20.4022	21.2523
048	.7268	.1518	.5769	.0019	.4270	.8520	.2771	.7021	.1272	.5522	.9773	.4023	.2524
051	.7269	.1519	.5770	.0020	.4271	.8521	.2772	.7022	.1273	.5523	.9774	.4024	.2526
054	.7270	.1521	.5771	.0022	.4272	.8523	.2773	.7024	.1274	.5525	.9775	.4026	.2527
057	.7271	.1522	.5772	.0023	.4273	.8524	.2775	.7025	.1276	.5526	.9777	.4027	.2529
425060	15.7272	16.1523	16.5773	17.0024	17.4275	17.8525	18.2776	18.7026	19.1277	19.5528	19.9778	20.4029	21.2530
063	.7273	.1524	.5775	.0025	.4276	.8526	.2777	.7028	.1278	.5529	.9780	.4030	.2532
066	.7274	.1525	.5776	.0026	.4277	.8528	.2778	.7029	.1280	.5530	.9781	.4032	.2533
069	.7276	.1526	.5777	.0028	.4278	.8529	.2780	.7030	.1281	.5532	.9782	.4033	.2535
072	.7277	.1527	.5778	.0029	.4280	.8530	.2781	.7032	.1282	.5533	.9784	.4035	.2536
425075	15.7278	16.1529	16.5779	17.0030	17.4281	17.8532	18.2782	18.7033	19.1284	19.5535	19.9785	20.4036	21.2538
078	.7279	.1530	.5780	.0031	.4282	.8533	.2784	.7034	.1285	.5536	.9787	.4037	.2539
081	.7280	.1531	.5782	.0032	.4283	.8534	.2785	.7036	.1286	.5537	.9788	.4039	.2541
084	.7281	.1532	.5783	.0034	.4284	.8535	.2786	.7037	.1288	.5539	.9789	.4040	.2542
087	.7282	.1533	.5784	.0035	.4286	.8537	.2787	.7038	.1289	.5540	.9791	.4042	.2544
425090	15.7283	16.1534	16.5785	17.0036	17.4287	17.8538	18.2789	18.7040	19.1291	19.5541	19.9792	20.4043	21.2545
093	.7284	.1535	.5786	.0037	.4288	.8539	.2790	.7041	.1292	.5543	.9794	.4045	.2547
096	.7286	.1536	.5787	.0038	.4289	.8540	.2791	.7042	.1293	.5544	.9795	.4046	.2548
099	.7287	.1538	.5789	.0040	.4291	.8542	.2793	.7044	.1295	.5546	.9797	.4048	.2550
102	.7288	.1539	.5790	.0041	.4292	.8543	.2794	.7045	.1296	.5547	.9798	.4049	.2551
425105	15.7289	16.1540	16.5791	17.0042	17.4293	17.8544	18.2795	18.7046	19.1297	19.5548	19.9799	20.4050	21.2553
108	.7290	.1541	.5792	.0043	.4294	.8545	.2796	.7048	.1299	.5550	.9801	.4052	.2554
111	.7291	.1542	.5793	.0044	.4296	.8547	.2798	.7049	.1300	.5551	.9802	.4053	.2556
114	.7292	.1543	.5794	.0046	.4297	.8548	.2799	.7050	.1301	.5552	.9804	.4055	.2557
117	.7293	.1544	.5796	.0047	.4298	.8549	.2800	.7051	.1303	.5554	.9805	.4056	.2559
425120	15.7294	16.1546	16.5797	17.0048	17.4299	17.8550	18.2802	18.7053	19.1304	19.5555	19.9806	20.4058	21.2560
123	.7296	.1547	.5798	.0049	.4300	.8552	.2803	.7054	.1305	.5557	.9808	.4059	.2562
126	.7297	.1548	.5799	.0050	.4302	.8553	.2804	.7055	.1307	.5558	.9809	.4060	.2563
129	.7298	.1549	.5800	.0052	.4303	.8554	.2805	.7057	.1308	.5559	.9811	.4062	.2565
132	.7299	.1550	.5801	.0053	.4304	.8555	.2807	.7058	.1309	.5561	.9812	.4063	.2566
425135	15.7300	16.1551	16.5803	17.0054	17.4305	17.8557	18.2808	18.7059	19.1311	19.5562	19.9813	20.4065	21.2568
138	.7301	.1552	.5804	.0055	.4307	.8558	.2809	.7061	.1312	.5563	.9815	.4066	.2569
141	.7302	.1554	.5805	.0056	.4308	.8559	.2811	.7062	.1313	.5565	.9816	.4068	.2571
144	.7303	.1555	.5806	.0058	.4309	.8560	.2812	.7063	.1315	.5566	.9818	.4069	.2572
147	.7304	.1556	.5807	.0059	.4310	.8562	.2813	.7065	.1316	.5568	.9819	.4071	.2574
425150	15.7306	16.1557	16.5809	17.0060	17.4312	17.8563	18.2815	18.7066	19.1318	19.5569	19.9821	20.4072	21.2575
153	.7307	.1558	.5810	.0061	.4313	.8564	.2816	.7067	.1319	.5570	.9822	.4073	.2577
156	.7308	.1559	.5811	.0062	.4314	.8566	.2817	.7069	.1320	.5572	.9823	.4075	.2578
159	.7309	.1560	.5812	.0064	.4315	.8567	.2818	.7070	.1322	.5573	.9825	.4076	.2580
162	.7310	.1562	.5813	.0065	.4316	.8568	.2820	.7071	.1323	.5575	.9826	.4078	.2581
425165	15.7311	16.1563	16.5814	17.0066	17.4318	17.8569	18.2821	18.7073	19.1324	19.5576	19.9828	20.4079	21.2583
168	.7312	.1564	.5816	.0067	.4319	.8571	.2822	.7074	.1326	.5577	.9829	.4081	.2584
171	.7313	.1565	.5817	.0068	.4320	.8572	.2824	.7075	.1327	.5579	.9830	.4082	.2586
174	.7314	.1566	.5818	.0070	.4321	.8573	.2825	.7077	.1328	.5580	.9832	.4084	.2587
177	.7315	.1567	.5819	.0071	.4323	.8574	.2826	.7078	.1330	.5581	.9833	.4085	.2589
425180	15.7317	16.1568	16.5820	17.0072	17.4324	17.8576	18.2827	18.7079	19.1331	19.5583	19.9835	20.4086	21.2590
183	.7318	.1570	.5821	.0073	.4325	.8577	.2829	.7081	.1332	.5584	.9836	.4088	.2592
186	.7319	.1571	.5823	.0074	.4326	.8578	.2830	.7082	.1334	.5586	.9837	.4089	.2593
189	.7320	.1572	.5824	.0076	.4327	.8579	.2831	.7083	.1335	.5587	.9839	.4091	.2595
192	.7321	.1573	.5825	.0077	.4329	.8581	.2833	.7084	.1336	.5588	.9840	.4092	.2596
425195	15.7322	16.1574	16.5826	17.0078	17.4330	17.8582	18.2834	18.7086	19.1338	19.5590	19.9842	20.4094	21.2598
198	.7323	.1575	.5827	.0079	.4331	.8583	.2835	.7087	.1339	.5591	.9843	.4095	.2599
201	.7324	.1576	.5828	.0080	.4332	.8584	.2836	.7088	.1340	.5592	.9844	.4096	.2601
204	.7325	.1578	.5830	.0082	.4334	.8586	.2838	.7090	.1342	.5594	.9846	.4098	.2602
207	.7327	.1579	.5831	.0083	.4335	.8587	.2839	.7091	.1343	.5595	.9847	.4099	.2604
425210	15.7328	16.1580	16.5832	17.0084	17.4336	17.8588	18.2840	18.7092	19.1345	19.5597	19.9849	20.4101	21.2605
213	.7329	.1581	.5833	.0085	.4337	.8589	.2842	.7094	.1346	.5598	.9850	.4102	.2607
216	.7330	.1582	.5834	.0086	.4339	.8591	.2843	.7095	.1347	.5599	.9852	.4104	.2608
219	.7331	.1583	.5835	.0088	.4340	.8592	.2844	.7096	.1349	.5601	.9853	.4105	.2610
222	.7332	.1584	.5837	.0089	.4341	.8593	.2845	.7098	.1350	.5602	.9854	.4107	.2611
425225	15.7333	16.1586	16.5838	17.0090	17.4342	17.8595	18.2837	18.7099	19.1351	19.5604	19.9856	20.4108	21.2613
228	.7334	.1587	.5839	.0091	.4343	.8596	.2848	.7100	.1353	.5605	.9857	.4109	.2614
231	.7335	.1588	.5840	.0092	.4345	.8597	.2839	.7102	.1354	.5606	.9859	.4111	.2616
234	.7337	.1589	.5841	.0094	.4346	.8598	.2851	.7103	.1355	.5608	.9860	.4112	.2617
237	.7338	.1590	.5842	.0095	.4347	.8600	.2852	.7104	.1357	.5609	.9861	.4114	.2619
425240	15.7339	16.1591	16.5844	17.0096	17.4348	17.8601	18.2853	18.7106	19.1358	19.5610	19.9863	20.4115	21.2620
243	.7340	.1592	.5845	.0097	.4350	.8602	.2854	.7107	.1359	.5612	.9864	.4117	.2622
246	.7341	.1593	.5846	.0098	.4351	.8603	.2856	.7108	.1361	.5613	.9866	.4118	.2623
249	.7342	.1595	.5847	.0100	.4352	.8605	.2857	.7110	.1362	.5615	.9867	.4120	.2625
252	.7343	.1596	.5848	.0101	.4353	.8606	.2858	.7111	.1363	.5616	.9868	.4121	.2626
425255	15.7344	16.1597	16.5849	17.0102	17.4355	17.8607	18.2860	18.7112	19.1365	19.5617	19.9870	20.4122	21.2628
258	.7345	.1598	.5851	.0103	.4356	.8608	.2861	.7114	.1366	.5619	.9871	.4124	.2629
261	.7347	.1599	.5852	.0104	.4357	.8610	.2862	.7115	.1367	.5620	.9873	.4125	.2631
264	.7348	.1600	.5853	.0106	.4358	.8611	.2864	.7116	.1369	.5621	.9874	.4127	.2632
267	.7349	.1601	.5854	.0107	.4359	.8612	.2865	.7117	.1370	.5623	.9975	.4128	.2634
425270	15.7350	16.1603	16.5855	17.0108	17.4361	17.8613	18.2866	18.7119	19.1372	19.5624	19.9877	20.4130	21.2635
273	.7351	.1604	.5856	.0109	.4362	.8615	.2867	.7120	.1373	.5626	.9878	.4131	.2637
276	.7352	.1605	.5858	.0110	.4363	.8616	.2869	.7121	.1374	.5627	.9880	.4132	.2638
279	.7353	.1606	.5859	.0112	.4364	.8617	.2870	.7123	.1376	.5628	.9881	.4134	.2640
282	.7354	.1607	.5860	.0113	.4366	.8618	.2871	.7124	.1377	.5630	.9883	.4135	.2641
425285	15.7355	16.1608	16.5861	17.0114	17.4367	17.8620	18.2873	18.7125	19.1378	19.5631	19.9884	20.4137	21.2643
288	.7357	.1609	.5862	.0115	.4368	.8621	.2874	.7127	.1380	.5632	.9885	.4138	.2644
291	.7358	.1611	.5863	.0116	.4369	.8622	.2875	.7128	.1381	.5634	.9887	.4140	.2646
294	.7359	.1612	.5865	.0118	.4371	.8623	.2876	.7129	.1382	.5635	.9888	.4141	.2647
297	.7360	.1613	.5866	.0119	.4372	.8625	.2878	.7131	.1384	.5637	.9890	.4143	.2649
425300	15.7361	16.1614	16.5867	17.0120	17.4373	17.8626	18.2879	18.7132	19.1385	19.5638	19.9891	20.4144	21.2650

R

MEGACYCLES PER SECOND

HARMONICS

BASIC FREQ.	24	25	26	27	28	29	30	31	32	33	34	35	36
425300	10.2072	10.6325	11.0578	11.4831	11.9084	12.3337	12.7590	13.1843	13.6096	14.0349	14.4602	14.8855	15.3108
303	.2073	.6326	.0579	.4832	.9085	.3338	.7591	.1844	.6097	.0350	.4603	.8856	.3109
306	.2073	.6327	.0580	.4833	.9086	.3339	.7592	.1845	.6098	.0351	.4604	.8857	.3110
309	.2074	.6327	.0580	.4833	.9087	.3340	.7593	.1846	.6099	.0352	.4605	.8858	.3111
312	.2075	.6328	.0581	.4834	.9087	.3340	.7594	.1847	.6100	.0353	.4606	.8859	.3112
425315	10.2076	10.6329	11.0582	11.4835	11.9088	12.3341	12.7595	13.1848	13.6101	14.0354	14.4607	14.8860	15.3113
318	.2076	.6330	.0583	.4836	.9089	.3342	.7595	.1849	.6102	.0355	.4608	.8861	.3114
321	.2077	.6330	.0583	.4837	.9090	.3343	.7596	.1850	.6103	.0356	.4609	.8862	.3116
324	.2078	.6331	.0584	.4837	.9091	.3344	.7597	.1850	.6104	.0357	.4610	.8863	.3117
327	.2078	.6332	.0585	.4838	.9092	.3345	.7598	.1851	.6105	.0358	.4611	.8864	.3118
425330	10.2079	10.6333	11.0586	11.4839	11.9092	12.3346	12.7599	13.1852	13.6106	14.0359	14.4612	14.8866	15.3119
333	.2080	.6333	.0587	.4840	.9093	.3347	.7600	.1853	.6107	.0360	.4613	.8867	.3120
336	.2081	.6334	.0587	.4841	.9094	.3347	.7601	.1854	.6108	.0361	.4614	.8868	.3121
339	.2081	.6335	.0588	.4842	.9095	.3348	.7602	.1855	.6108	.0362	.4615	.8869	.3122
342	.2082	.6336	.0589	.4842	.9096	.3349	.7603	.1856	.6109	.0363	.4616	.8870	.3123
425345	10.2083	10.6336	11.0590	11.4843	11.9097	12.3350	12.7604	13.1857	13.6110	14.0364	14.4617	14.8871	15.3124
348	.2084	.6337	.0590	.4844	.9097	.3351	.7604	.1858	.6111	.0365	.4618	.8872	.3125
351	.2084	.6338	.0591	.4845	.9098	.3352	.7605	.1859	.6112	.0366	.4619	.8873	.3126
354	.2085	.6339	.0592	.4846	.9099	.3353	.7606	.1860	.6113	.0367	.4620	.8874	.3127
357	.2086	.6339	.0593	.4846	.9100	.3354	.7607	.1861	.6114	.0368	.4621	.8875	.3129
425360	10.2086	10.6340	11.0594	11.4847	11.9101	12.3354	12.7608	13.1862	13.6115	14.0369	14.4622	14.8876	15.3130
363	.2087	.6341	.0594	.4848	.9102	.3355	.7609	.1863	.6116	.0370	.4623	.8877	.3131
366	.2088	.6342	.0595	.4849	.9102	.3356	.7610	.1863	.6117	.0371	.4624	.8878	.3132
369	.2089	.6342	.0596	.4850	.9103	.3357	.7611	.1864	.6118	.0372	.4625	.8879	.3133
372	.2089	.6343	.0597	.4850	.9104	.3358	.7612	.1865	.6119	.0373	.4626	.8880	.3134
425375	10.2090	10.6344	11.0598	11.4851	11.9105	12.3359	12.7613	13.1866	13.6120	14.0374	14.4628	14.8881	15.3135
378	.2091	.6345	.0598	.4852	.9106	.3360	.7613	.1867	.6121	.0375	.4629	.8882	.3136
381	.2091	.6345	.0599	.4853	.9107	.3360	.7614	.1868	.6122	.0376	.4630	.8883	.3137
384	.2092	.6346	.0600	.4854	.9108	.3361	.7615	.1869	.6123	.0377	.4631	.8884	.3138
387	.2093	.6347	.0601	.4854	.9108	.3362	.7616	.1870	.6124	.0378	.4632	.8885	.3139
425390	10.2094	10.6348	11.0601	11.4855	11.9109	12.3363	12.7617	13.1871	13.6125	14.0379	14.4633	14.8887	15.3140
393	.2094	.6348	.0602	.4856	.9110	.3364	.7618	.1872	.6126	.0380	.4634	.8888	.3141
396	.2095	.6349	.0603	.4857	.9111	.3365	.7619	.1873	.6127	.0381	.4635	.8889	.3143
399	.2096	.6350	.0604	.4858	.9112	.3366	.7620	.1874	.6128	.0382	.4636	.8890	.3144
402	.2096	.6351	.0605	.4859	.9113	.3367	.7621	.1875	.6129	.0383	.4637	.8891	.3145
425405	10.2097	10.6351	11.0605	11.4859	11.9113	12.3367	12.7622	13.1876	13.6130	14.0384	14.4638	14.8892	15.3146
408	.2098	.6352	.0606	.4860	.9114	.3368	.7622	.1876	.6131	.0385	.4639	.8893	.3147
411	.2099	.6353	.0607	.4861	.9115	.3369	.7623	.1877	.6132	.0386	.4640	.8894	.3148
414	.2099	.6354	.0608	.4862	.9116	.3370	.7624	.1878	.6132	.0387	.4641	.8895	.3149
417	.2100	.6354	.0608	.4863	.9117	.3371	.7625	.1879	.6133	.0388	.4642	.8896	.3150
425420	10.2101	10.6355	11.0609	11.4863	11.9118	12.3372	12.7626	13.1880	13.6134	14.0389	14.4643	14.8897	15.3151
423	.2102	.6356	.0610	.4864	.9118	.3373	.7627	.1881	.6135	.0390	.4644	.8898	.3152
426	.2102	.6357	.0611	.4865	.9119	.3374	.7628	.1882	.6136	.0391	.4645	.8899	.3153
429	.2103	.6357	.0612	.4866	.9120	.3374	.7629	.1883	.6137	.0392	.4646	.8900	.3154
432	.2104	.6358	.0612	.4867	.9121	.3375	.7630	.1884	.6138	.0393	.4647	.8901	.3156
425435	10.2104	10.6359	11.0613	11.4867	11.9122	12.3376	12.7631	13.1885	13.6139	14.0394	14.4648	14.8902	15.3157
438	.2105	.6360	.0614	.4868	.9123	.3377	.7631	.1886	.6140	.0395	.4649	.8903	.3158
441	.2106	.6360	.0615	.4869	.9123	.3378	.7632	.1887	.6141	.0396	.4650	.8904	.3159
444	.2107	.6361	.0615	.4870	.9124	.3379	.7633	.1888	.6142	.0397	.4651	.8905	.3160
447	.2107	.6362	.0616	.4871	.9125	.3380	.7634	.1889	.6143	.0398	.4652	.8906	.3161
425450	10.2108	10.6363	11.0617	11.4872	11.9126	12.3381	12.7635	13.1890	13.6144	14.0399	14.4653	14.8908	15.3162
453	.2109	.6363	.0618	.4872	.9127	.3381	.7636	.1890	.6145	.0399	.4654	.8909	.3163
456	.2109	.6364	.0619	.4873	.9128	.3382	.7637	.1891	.6146	.0400	.4655	.8910	.3164
459	.2110	.6365	.0619	.4874	.9129	.3383	.7638	.1892	.6147	.0401	.4656	.8911	.3165
462	.2111	.6366	.0620	.4875	.9129	.3384	.7639	.1893	.6148	.0402	.4657	.8912	.3166
425465	10.2112	10.6366	11.0621	11.4876	11.9130	12.3385	12.7640	13.1894	13.6149	14.0403	14.4658	14.8913	15.3167
468	.2112	.6367	.0622	.4876	.9131	.3386	.7640	.1895	.6150	.0404	.4659	.8914	.3168
471	.2113	.6368	.0622	.4877	.9132	.3387	.7641	.1896	.6151	.0405	.4660	.8915	.3170
474	.2114	.6369	.0623	.4878	.9133	.3387	.7642	.1897	.6152	.0406	.4661	.8916	.3171
477	.2114	.6369	.0624	.4879	.9134	.3388	.7643	.1898	.6153	.0407	.4662	.8917	.3172
425480	10.2115	10.6370	11.0625	11.4880	11.9134	12.3389	12.7644	13.1899	13.6154	14.0408	14.4663	14.8918	15.3173
483	.2116	.6371	.0626	.4880	.9135	.3390	.7645	.1900	.6155	.0409	.4664	.8919	.3174
486	.2117	.6372	.0626	.4881	.9136	.3391	.7646	.1901	.6156	.0410	.4665	.8920	.3175
489	.2117	.6372	.0627	.4882	.9137	.3392	.7647	.1902	.6156	.0411	.4666	.8921	.3176
492	.2118	.6373	.0628	.4883	.9138	.3393	.7648	.1903	.6157	.0412	.4667	.8922	.3177
425495	10.2119	10.6374	11.0629	11.4884	11.9139	12.3394	12.7649	13.1903	13.6158	14.0413	14.4668	14.8923	15.3178
498	.2120	.6375	.0629	.4884	.9139	.3394	.7649	.1904	.6159	.0414	.4669	.8924	.3179
501	.2120	.6375	.0630	.4885	.9140	.3395	.7650	.1905	.6160	.0415	.4670	.8925	.3180
504	.2121	.6376	.0631	.4886	.9141	.3396	.7651	.1906	.6161	.0416	.4671	.8926	.3181
507	.2122	.6377	.0632	.4887	.9142	.3397	.7652	.1907	.6162	.0417	.4672	.8927	.3183
425510	10.2122	10.6378	11.0633	11.4888	11.9143	12.3398	12.7653	13.1908	13.6163	14.0418	14.4673	14.8929	15.3184
513	.2123	.6378	.0633	.4889	.9144	.3399	.7654	.1909	.6164	.0419	.4674	.8930	.3185
516	.2124	.6379	.0634	.4889	.9144	.3400	.7655	.1910	.6165	.0420	.4675	.8931	.3186
519	.2125	.6380	.0635	.4890	.9145	.3401	.7656	.1911	.6166	.0421	.4676	.8932	.3187
522	.2125	.6381	.0636	.4891	.9146	.3401	.7657	.1912	.6167	.0422	.4677	.8933	.3188
425525	10.2126	10.6381	11.0637	11.4892	11.9147	12.3402	12.7658	13.1913	13.6168	14.0423	14.4679	14.8934	15.3189
528	.2127	.6382	.0637	.4893	.9148	.3403	.7658	.1914	.6169	.0424	.4680	.8935	.3190
531	.2127	.6383	.0638	.4893	.9149	.3404	.7659	.1915	.6170	.0425	.4681	.8936	.3191
534	.2128	.6384	.0639	.4894	.9150	.3405	.7660	.1916	.6171	.0426	.4682	.8937	.3192
537	.2129	.6384	.0640	.4895	.9150	.3406	.7661	.1916	.6172	.0427	.4683	.8938	.3193
425540	10.2130	10.6385	11.0640	11.4896	11.9151	12.3407	12.7662	13.1917	13.6173	14.0428	14.4684	14.8939	15.3194
543	.2130	.6386	.0641	.4897	.9152	.3407	.7663	.1918	.6174	.0429	.4685	.8940	.3195
546	.2131	.6387	.0642	.4897	.9153	.3408	.7664	.1919	.6175	.0430	.4686	.8941	.3197
549	.2132	.6387	.0643	.4898	.9154	.3409	.7665	.1920	.6176	.0431	.4687	.8942	.3198
552	.2132	.6388	.0644	.4899	.9155	.3410	.7666	.1921	.6177	.0432	.4688	.8943	.3199
425555	10.2133	10.6389	11.0644	11.4900	11.9155	12.3411	12.7667	13.1922	13.6178	14.0433	14.4689	14.8944	15.3200
558	.2134	.6390	.0645	.4901	.9156	.3412	.7667	.1923	.6179	.0434	.4690	.8945	.3201
561	.2135	.6390	.0646	.4901	.9157	.3413	.7668	.1924	.6180	.0435	.4691	.8946	.3202
564	.2135	.6391	.0647	.4902	.9158	.3414	.7669	.1925	.6180	.0436	.4692	.8947	.3203
567	.2136	.6392	.0647	.4903	.9159	.3414	.7670	.1926	.6181	.0437	.4693	.8948	.3204
425570	10.2137	10.6393	11.0648	11.4904	11.9160	12.3415	12.7671	13.1927	13.6182	14.0438	14.4694	14.8950	15.3205
573	.2138	.6393	.0649	.4905	.9160	.3416	.7672	.1928	.6183	.0439	.4695	.8951	.3206
576	.2138	.6394	.0650	.4906	.9161	.3417	.7673	.1929	.6184	.0440	.4696	.8952	.3207
579	.2139	.6395	.0651	.4906	.9162	.3418	.7674	.1929	.6185	.0441	.4697	.8953	.3208
582	.2140	.6396	.0651	.4907	.9163	.3419	.7675	.1930	.6186	.0442	.4698	.8954	.3210
425585	10.2140	10.6396	11.0652	11.4908	11.9164	12.3420	12.7676	13.1931	13.6187	14.0443	14.4699	14.8955	15.3211
588	.2141	.6397	.0653	.4909	.9165	.3421	.7676	.1932	.6188	.0444	.4700	.8956	.3212
591	.2142	.6398	.0654	.4910	.9165	.3421	.7677	.1933	.6189	.0445	.4701	.8957	.3213
594	.2143	.6399	.0654	.4910	.9166	.3422	.7678	.1934	.6190	.0446	.4702	.8958	.3214
597	.2143	.6399	.0655	.4911	.9167	.3423	.7679	.1935	.6191	.0447	.4703	.8959	.3215
425600	10.2144	10.6400	11.0656	11.4912	11.9168	12.3424	12.7680	13.1936	13.6192	14.0448	14.4704	14.8960	15.3216

MEGACYCLES PER SECOND

H A R M O N I C S

BASIC FREQ.	37	38	39	40	41	42	43	44	45	46	47	48	50
425300	15.7361	16.1614	16.5867	17.0120	17.4373	17.8626	18.2879	18.7132	19.1385	19.5638	19.9891	20.4144	21.2650
303	.7362	.1615	.5868	.0121	.4374	.8627	.2880	.7133	.1386	.5639	.9892	.4145	.2652
306	.7363	.1616	.5869	.0122	.4375	.8629	.2882	.7135	.1388	.5641	.9894	.4147	.2653
309	.7364	.1617	.5871	.0124	.4377	.8630	.2883	.7136	.1389	.5642	.9895	.4148	.2655
312	.7365	.1619	.5872	.0125	.4378	.8631	.2884	.7137	.1390	.5644	.9897	.4150	.2656
425315	15.7367	16.1620	16.5873	17.0126	17.4379	17.8632	18.2885	18.7139	19.1392	19.5645	19.9898	20.4151	21.2658
318	.7368	.1621	.5874	.0127	.4380	.8634	.2887	.7140	.1393	.5646	.9899	.4153	.2659
321	.7369	.1622	.5875	.0128	.4382	.8635	.2888	.7141	.1394	.5648	.9901	.4154	.2661
324	.7370	.1623	.5876	.0130	.4383	.8636	.2889	.7143	.1396	.5649	.9902	.4156	.2662
327	.7371	.1624	.5878	.0131	.4384	.8637	.2891	.7144	.1397	.5650	.9904	.4157	.2664
425330	15.7372	16.1625	16.5879	17.0132	17.4385	17.8639	18.2892	18.7145	19.1399	19.5652	19.9905	20.4158	21.2665
333	.7373	.1627	.5880	.0133	.4387	.8640	.2893	.7147	.1400	.5653	.9907	.4160	.2667
336	.7374	.1628	.5881	.0134	.4388	.8641	.2894	.7148	.1401	.5655	.9908	.4161	.2668
339	.7375	.1629	.5882	.0136	.4389	.8642	.2896	.7149	.1403	.5656	.9909	.4163	.2670
342	.7377	.1630	.5883	.0137	.4390	.8644	.2897	.7150	.1404	.5657	.9911	.4164	.2671
425345	15.7378	16.1631	16.5885	17.0138	17.4391	17.8645	18.2898	18.7152	19.1405	19.5659	19.9912	20.4166	21.2673
348	.7379	.1632	.5886	.0139	.4393	.8646	.2900	.7153	.1407	.5660	.9914	.4167	.2674
351	.7380	.1633	.5887	.0140	.4394	.8647	.2901	.7154	.1408	.5661	.9915	.4168	.2676
354	.7381	.1635	.5888	.0142	.4395	.8649	.2902	.7156	.1409	.5663	.9916	.4170	.2677
357	.7382	.1636	.5889	.0143	.4396	.8650	.2904	.7157	.1411	.5664	.9918	.4171	.2679
425360	15.7383	16.1637	16.5890	17.0144	17.4398	17.8651	18.2905	18.7158	19.1412	19.5666	19.9919	20.4173	21.2680
363	.7384	.1638	.5892	.0145	.4399	.8652	.2906	.7160	.1413	.5667	.9921	.4174	.2682
366	.7385	.1639	.5893	.0146	.4400	.8654	.2907	.7161	.1415	.5668	.9922	.4176	.2683
369	.7387	.1640	.5894	.0148	.4401	.8655	.2909	.7162	.1416	.5670	.9923	.4177	.2685
372	.7388	.1641	.5895	.0149	.4403	.8656	.2910	.7164	.1417	.5671	.9925	.4179	.2686
425375	15.7389	16.1643	16.5896	17.0150	17.4404	17.8658	18.2911	18.7165	19.1419	19.5673	19.9926	20.4180	21.2688
378	.7390	.1644	.5897	.0151	.4405	.8659	.2913	.7166	.1420	.5674	.9928	.4181	.2689
381	.7391	.1645	.5899	.0152	.4406	.8660	.2914	.7168	.1421	.5675	.9929	.4183	.2691
384	.7392	.1646	.5900	.0154	.4407	.8661	.2915	.7169	.1423	.5677	.9930	.4184	.2692
387	.7393	.1647	.5901	.0155	.4409	.8663	.2916	.7170	.1424	.5678	.9932	.4186	.2694
425390	15.7394	16.1648	16.5902	17.0156	17.4410	17.8664	18.2918	18.7172	19.1426	19.5679	19.9933	20.4187	21.2695
393	.7395	.1649	.5903	.0157	.4411	.8665	.2919	.7173	.1427	.5681	.9935	.4189	.2697
396	.7397	.1650	.5904	.0158	.4412	.8666	.2920	.7174	.1428	.5682	.9936	.4190	.2698
399	.7398	.1652	.5906	.0160	.4414	.8668	.2922	.7176	.1430	.5684	.9938	.4192	.2700
402	.7399	.1653	.5907	.0161	.4415	.8669	.2923	.7177	.1431	.5685	.9939	.4193	.2701
425405	15.7400	16.1654	16.5908	17.0162	17.4416	17.8670	18.2924	18.7178	19.1432	19.5686	19.9940	20.4194	21.2703
408	.7401	.1655	.5909	.0163	.4417	.8671	.2925	.7180	.1434	.5688	.9942	.4196	.2704
411	.7402	.1656	.5910	.0164	.4419	.8673	.2927	.7181	.1435	.5689	.9943	.4197	.2706
414	.7403	.1657	.5911	.0166	.4420	.8674	.2928	.7182	.1436	.5690	.9945	.4199	.2707
417	.7404	.1658	.5913	.0167	.4421	.8675	.2929	.7183	.1438	.5692	.9946	.4200	.2709
425420	15.7405	16.1660	16.5914	17.0168	17.4422	17.8676	18.2931	18.7185	19.1439	19.5693	19.9947	20.4202	21.2710
423	.7407	.1661	.5915	.0169	.4423	.8678	.2932	.7186	.1440	.5695	.9949	.4203	.2712
426	.7408	.1662	.5916	.0170	.4425	.8679	.2933	.7187	.1442	.5696	.9950	.4204	.2713
429	.7409	.1663	.5917	.0172	.4426	.8680	.2934	.7189	.1443	.5697	.9952	.4206	.2715
432	.7410	.1664	.5918	.0173	.4427	.8681	.2936	.7190	.1444	.5699	.9953	.4207	.2716
425435	15.7411	16.1665	16.5920	17.0174	17.4428	17.8683	18.2937	18.7191	19.1446	19.5700	19.9954	20.4209	21.2718
438	.7412	.1666	.5921	.0175	.4430	.8684	.2938	.7193	.1447	.5701	.9956	.4210	.2719
441	.7413	.1668	.5922	.0176	.4431	.8685	.2940	.7194	.1448	.5703	.9957	.4212	.2721
444	.7414	.1669	.5923	.0178	.4432	.8686	.2941	.7195	.1450	.5704	.9959	.4213	.2722
447	.7415	.1670	.5924	.0179	.4433	.8688	.2942	.7197	.1451	.5706	.9960	.4215	.2724
425450	15.7417	16.1671	16.5926	17.0180	17.4435	17.8689	18.2944	18.7198	19.1453	19.5707	19.9962	20.4216	21.2725
453	.7418	.1672	.5927	.0181	.4436	.8690	.2945	.7199	.1454	.5708	.9963	.4217	.2727
456	.7419	.1673	.5928	.0182	.4437	.8692	.2946	.7201	.1455	.5710	.9964	.4219	.2728
459	.7420	.1674	.5929	.0184	.4438	.8693	.2947	.7202	.1457	.5711	.9966	.4220	.2730
462	.7421	.1676	.5930	.0185	.4439	.8694	.2949	.7203	.1458	.5713	.9967	.4222	.2731
425465	15.7422	16.1677	16.5931	17.0186	17.4441	17.8695	18.2950	18.7205	19.1459	19.5714	19.9969	20.4223	21.2733
468	.7423	.1678	.5933	.0187	.4442	.8697	.2951	.7206	.1461	.5715	.9970	.4225	.2734
471	.7424	.1679	.5934	.0188	.4443	.8698	.2953	.7207	.1462	.5717	.9971	.4226	.2736
474	.7425	.1680	.5935	.0190	.4444	.8699	.2954	.7209	.1463	.5718	.9973	.4228	.2737
477	.7426	.1681	.5936	.0191	.4446	.8700	.2955	.7210	.1465	.5719	.9974	.4229	.2739
425480	15.7428	16.1682	16.5937	17.0192	17.4447	17.7802	18.2956	18.7211	19.1466	19.5721	19.9976	20.4230	21.2740
483	.7429	.1684	.5938	.0193	.4448	.8703	.2958	.7213	.1467	.5722	.9977	.4232	.2742
486	.7430	.1685	.5940	.0194	.4449	.8704	.2959	.7214	.1469	.5724	.9978	.4233	.2743
489	.7431	.1686	.5941	.0196	.4450	.8705	.2960	.7215	.1470	.5725	.9980	.4235	.2745
492	.7432	.1687	.5942	.0197	.4452	.8707	.2962	.7216	.1471	.5726	.9981	.4236	.2746
425495	15.7433	16.1688	16.5943	17.0198	17.4453	17.8708	18.2963	18.7218	19.1473	19.5728	19.9983	20.4238	21.2748
498	.7434	.1689	.5944	.0199	.4454	.8709	.2964	.7219	.1474	.5729	.9984	.4239	.2749
501	.7435	.1690	.5945	.0200	.4455	.8710	.2965	.7220	.1475	.5730	.9985	.4240	.2751
504	.7436	.1692	.5947	.0202	.4457	.8712	.2967	.7222	.1477	.5732	.9987	.4242	.2752
507	.7438	.1693	.5948	.0203	.4458	.8713	.2968	.7223	.1478	.5733	.9988	.4243	.2754
425510	15.7439	16.1694	16.5949	17.0204	17.4459	17.8714	18.2969	18.7224	19.1480	19.5735	19.9990	20.4245	21.2755
513	.7440	.1695	.5950	.0205	.4460	.8715	.2971	.7226	.1481	.5736	.9991	.4246	.2757
516	.7441	.1696	.5951	.0206	.4462	.8717	.2972	.7227	.1482	.5737	.9993	.4248	.2758
519	.7442	.1697	.5952	.0208	.4463	.8718	.2973	.7228	.1484	.5739	.9994	.4249	.2760
522	.7443	.1698	.5954	.0209	.4464	.8719	.2974	.7230	.1485	.5740	.9995	.4251	.2761
425525	15.7444	16.1700	16.5955	17.0210	17.4465	17.8721	18.2976	18.7231	19.1486	19.5742	19.9997	20.4252	21.2763
528	.7445	.1701	.5956	.0211	.4466	.8722	.2977	.7232	.1488	.5743	.9998	.4253	.2764
531	.7446	.1702	.5957	.0212	.4468	.8723	.2978	.7234	.1489	.5744	20.0000	.4255	.2766
534	.7448	.1703	.5958	.0214	.4469	.8724	.2980	.7235	.1490	.5746	.0001	.4256	.2767
537	.7449	.1704	.5959	.0215	.4470	.8726	.2981	.7236	.1492	.5747	.0002	.4258	.2769
425540	15.7450	16.1705	16.5961	17.0216	17.4471	17.8727	18.2982	18.7238	19.1493	19.5748	20.0004	20.4259	21.2770
543	.7451	.1706	.5962	.0217	.4473	.8728	.2983	.7239	.1494	.5750	.0005	.4261	.2772
546	.7452	.1707	.5963	.0218	.4474	.8729	.2985	.7240	.1496	.5751	.0007	.4262	.2773
549	.7453	.1709	.5964	.0220	.4475	.8731	.2986	.7242	.1497	.5753	.0008	.4264	.2775
552	.7454	.1710	.5965	.0221	.4476	.8732	.2987	.7243	.1498	.5754	.0009	.4265	.2776
425555	15.7455	16.1711	16.5966	17.0222	17.4478	17.8733	18.2989	18.7244	19.1500	19.5755	20.0011	20.4266	21.2778
558	.7456	.1712	.5968	.0223	.4479	.8734	.2990	.7246	.1501	.5757	.0012	.4268	.2779
561	.7458	.1713	.5969	.0224	.4480	.8736	.2991	.7247	.1502	.5758	.0014	.4269	.2781
564	.7459	.1714	.5970	.0226	.4481	.8737	.2993	.7248	.1504	.5759	.0015	.4271	.2782
567	.7460	.1715	.5971	.0227	.4482	.8738	.2994	.7249	.1505	.5761	.0016	.4272	.2784
425570	15.7461	16.1717	16.5972	17.0228	17.4484	17.8739	18.2995	18.7251	19.1507	19.5762	20.0018	20.4274	21.2785
573	.7462	.1718	.5973	.0229	.4485	.8741	.2996	.7252	.1508	.5764	.0019	.4275	.2787
576	.7463	.1719	.5975	.0230	.4486	.8742	.2998	.7253	.1509	.5765	.0021	.4276	.2788
579	.7464	.1720	.5976	.0232	.4487	.8743	.2999	.7255	.1511	.5766	.0022	.4278	.2790
582	.7465	.1721	.5977	.0233	.4489	.8744	.3000	.7256	.1512	.5768	.0024	.4279	.2791
425585	15.7466	16.1722	16.5978	17.0234	17.4490	17.8746	18.3002	18.7257	19.1513	19.5769	20.0025	20.4281	21.2793
588	.7468	.1723	.5979	.0235	.4491	.8747	.3003	.7259	.1515	.5770	.0026	.4282	.2794
591	.7469	.1725	.5980	.0236	.4492	.8748	.3004	.7260	.1516	.5772	.0028	.4284	.2796
594	.7470	.1726	.5982	.0238	.4494	.8749	.3005	.7261	.1517	.5773	.0029	.4285	.2797
597	.7471	.1727	.5983	.0239	.4495	.8751	.3007	.7263	.1519	.5775	.0031	.4287	.2799
425600	15.7472	16.1728	16.5984	17.0240	17.4496	17.8752	18.3008	18.7264	19.1520	19.5776	20.0032	20.4288	21.2800

MEGACYCLES PER SECOND

HARMONICS

BASIC FREQ.	24	25	26	27	28	29	30	31	32	33	34	35	36
425600	10.2144	10.6400	11.0656	11.4912	11.9168	12.3424	12.7680	13.1936	13.6192	14.0448	14.4704	14.8960	15.3216
603	.2145	.6401	.0657	.4913	.9169	.3425	.7681	.1937	.6193	.0449	.4705	.8961	.3217
606	.2145	.6402	.0658	.4914	.9170	.3426	.7682	.1938	.6194	.0450	.4706	.8962	.3218
609	.2146	.6402	.0658	.4914	.9171	.3427	.7683	.1939	.6195	.0451	.4707	.8963	.3219
612	.2147	.6403	.0659	.4915	.9171	.3427	.7684	.1940	.6196	.0452	.4708	.8964	.3220
425615	10.2148	10.6404	11.0660	11.4916	11.9172	12.3428	12.7685	13.1941	13.6197	14.0453	14.4709	14.8965	15.3221
618	.2148	.6405	.0661	.4917	.9173	.3429	.7685	.1942	.6198	.0454	.4710	.8966	.3222
621	.2149	.6405	.0661	.4918	.9174	.3430	.7686	.1943	.6199	.0455	.4711	.8967	.3224
624	.2150	.6406	.0662	.4918	.9175	.3431	.7687	.1943	.6200	.0456	.4712	.8968	.3225
627	.2150	.6407	.0663	.4919	.9176	.3432	.7688	.1944	.6201	.0457	.4713	.8969	.3226
425630	10.2151	10.6408	11.0664	11.4920	11.9176	12.3433	12.7689	13.1945	13.6202	14.0458	14.4714	14.8971	15.3227
633	.2152	.6408	.0665	.4921	.9177	.3434	.7690	.1946	.6203	.0459	.4715	.8972	.3228
636	.2153	.6409	.0665	.4922	.9178	.3434	.7691	.1947	.6204	.0460	.4716	.8973	.3229
639	.2153	.6410	.0666	.4923	.9179	.3435	.7692	.1948	.6204	.0461	.4717	.8974	.3230
642	.2154	.6411	.0667	.4923	.9180	.3436	.7693	.1949	.6205	.0462	.4718	.8975	.3231
425645	10.2155	10.6411	11.0668	11.4924	11.9181	12.3437	12.7694	13.1950	13.6206	14.0463	14.4719	14.8976	15.3232
648	.2156	.6412	.0668	.4925	.9181	.3438	.7694	.1951	.6207	.0464	.4720	.8977	.3233
651	.2156	.6413	.0669	.4926	.9182	.3439	.7695	.1952	.6208	.0465	.4721	.8978	.3234
654	.2157	.6414	.0670	.4927	.9183	.3440	.7696	.1953	.6209	.0466	.4722	.8979	.3235
657	.2158	.6414	.0671	.4927	.9184	.3441	.7697	.1954	.6210	.0467	.4723	.8980	.3237
425660	10.2158	10.6415	11.0672	11.4928	11.9185	12.3441	12.7698	13.1955	13.6211	14.0468	14.4724	14.8981	15.3238
663	.2159	.6416	.0672	.4929	.9186	.3442	.7699	.1956	.6212	.0469	.4725	.8982	.3239
666	.2160	.6417	.0673	.4930	.9186	.3443	.7700	.1956	.6213	.0470	.4726	.8983	.3240
669	.2161	.6417	.0674	.4931	.9187	.3444	.7701	.1957	.6214	.0471	.4727	.8984	.3241
672	.2161	.6418	.0675	.4931	.9188	.3445	.7702	.1958	.6215	.0472	.4728	.8985	.3242
425675	10.2162	10.6419	11.0676	11.4932	11.9189	12.3446	12.7703	13.1959	13.6216	14.0473	14.4730	14.8986	15.3243
678	.2163	.6420	.0676	.4933	.9190	.3447	.7703	.1960	.6217	.0474	.4731	.8987	.3244
681	.2163	.6420	.0677	.4934	.9191	.3447	.7704	.1961	.6218	.0475	.4732	.8988	.3245
684	.2164	.6421	.0678	.4935	.9192	.3448	.7705	.1962	.6219	.0476	.4733	.8989	.3246
687	.2165	.6422	.0679	.4935	.9192	.3449	.7706	.1963	.6220	.0477	.4734	.8990	.3247
425690	10.2166	10.6423	11.0679	11.4936	11.9193	12.3450	12.7707	13.1964	13.6221	14.0478	14.4735	14.8992	15.3248
693	.2166	.6423	.0680	.4937	.9194	.3451	.7708	.1965	.6222	.0479	.4736	.8993	.3249
696	.2167	.6424	.0681	.4938	.9195	.3452	.7709	.1966	.6223	.0480	.4737	.8994	.3251
699	.2168	.6425	.0682	.4939	.9196	.3453	.7710	.1967	.6224	.0481	.4738	.8995	.3252
702	.2168	.6426	.0683	.4940	.9197	.3454	.7711	.1968	.6225	.0482	.4739	.8996	.3253
425705	10.2169	10.6426	11.0683	11.4940	11.9197	12.3454	12.7712	13.1969	13.6226	14.0483	14.4740	14.8997	15.3254
708	.2170	.6427	.0684	.4941	.9198	.3455	.7712	.1969	.6227	.0484	.4741	.8998	.3255
711	.2171	.6428	.0685	.4942	.9199	.3456	.7713	.1970	.6228	.0485	.4742	.8999	.3256
714	.2171	.6429	.0686	.4943	.9200	.3457	.7714	.1971	.6228	.0486	.4743	.9000	.3257
717	.2172	.6429	.0686	.4944	.9201	.3458	.7715	.1972	.6229	.0487	.4744	.9001	.3258
425720	10.2173	10.6430	11.0687	11.4944	11.9202	12.3459	12.7716	13.1973	13.6230	14.0488	14.4745	14.9002	15.3259
723	.2174	.6431	.0688	.4945	.9202	.3460	.7717	.1974	.6231	.0489	.4746	.9003	.3260
726	.2174	.6432	.0689	.4946	.9203	.3461	.7718	.1975	.6232	.0490	.4747	.9004	.3261
729	.2175	.6432	.0690	.4947	.9204	.3461	.7719	.1976	.6233	.0491	.4748	.9005	.3262
732	.2176	.6433	.0690	.4948	.9205	.3462	.7720	.1977	.6234	.0492	.4749	.9006	.3264
425735	10.2176	10.6434	11.0691	11.4948	11.9206	12.3463	12.7721	13.1978	13.6235	14.0493	14.4750	14.9007	15.3265
738	.2177	.6435	.0692	.4949	.9207	.3464	.7721	.1979	.6236	.0494	.4751	.9008	.3266
741	.2178	.6435	.0693	.4950	.9207	.3465	.7722	.1980	.6237	.0495	.4752	.9009	.3267
744	.2179	.6436	.0693	.4951	.9208	.3466	.7723	.1981	.6238	.0496	.4753	.9010	.3268
747	.2179	.6437	.0694	.4952	.9209	.3467	.7724	.1982	.6239	.0497	.4754	.9011	.3269
425750	10.2180	10.6438	11.0695	11.4953	11.9210	12.3468	12.7725	13.1983	13.6240	14.0498	14.4755	14.9013	15.3270
753	.2181	.6438	.0696	.4953	.9211	.3468	.7726	.1983	.6241	.0498	.4756	.9014	.3271
756	.2181	.6439	.0697	.4954	.9212	.3469	.7727	.1984	.6242	.0499	.4757	.9015	.3272
759	.2182	.6440	.0697	.4955	.9213	.3470	.7728	.1985	.6243	.0500	.4758	.9016	.3273
762	.2183	.6441	.0698	.4956	.9213	.3471	.7729	.1986	.6244	.0501	.4759	.9017	.3274
425765	10.2184	10.6441	11.0699	11.4957	11.9214	12.3472	12.7730	13.1987	13.6245	14.0502	14.4760	14.9018	15.3275
768	.2184	.6442	.0700	.4957	.9215	.3473	.7730	.1988	.6246	.0503	.4761	.9019	.3276
771	.2185	.6443	.0700	.4958	.9216	.3474	.7731	.1989	.6247	.0504	.4762	.9020	.3278
774	.2186	.6444	.0701	.4959	.9217	.3474	.7732	.1990	.6248	.0505	.4763	.9021	.3279
777	.2186	.6444	.0702	.4960	.9218	.3475	.7733	.1991	.6249	.0506	.4764	.9022	.3280
425780	10.2187	10.6445	11.0703	11.4961	11.9218	12.3476	12.7734	13.1992	13.6250	14.0507	14.4765	14.9023	15.3281
783	.2188	.6446	.0704	.4961	.9219	.3477	.7735	.1993	.6251	.0508	.4766	.9024	.3282
786	.2189	.6447	.0704	.4962	.9220	.3478	.7736	.1994	.6252	.0509	.4767	.9025	.3283
789	.2189	.6447	.0705	.4963	.9221	.3479	.7737	.1995	.6252	.0510	.4768	.9026	.3284
792	.2190	.6448	.0706	.4964	.9222	.3480	.7738	.1996	.6253	.0511	.4769	.9027	.3285
425795	10.2191	10.6449	11.0707	11.4965	11.9223	12.3481	12.7739	13.1996	13.6254	14.0512	14.4770	14.9028	15.3286
798	.2192	.6450	.0707	.4965	.9223	.3481	.7739	.1997	.6255	.0513	.4771	.9029	.3287
801	.2192	.6450	.0708	.4966	.9224	.3482	.7740	.1998	.6256	.0514	.4772	.9030	.3288
804	.2193	.6451	.0709	.4967	.9225	.3483	.7741	.1999	.6257	.0515	.4773	.9031	.3289
807	.2194	.6452	.0710	.4968	.9226	.3484	.7742	.2000	.6258	.0516	.4774	.9032	.3291
425810	10.2194	10.6453	11.0711	11.4969	11.9227	12.3485	12.7743	13.2001	13.6259	14.0517	14.4775	14.9034	15.3292
813	.2195	.6453	.0711	.4970	.9228	.3486	.7744	.2002	.6260	.0518	.4776	.9035	.3293
816	.2196	.6454	.0712	.4970	.9228	.3487	.7745	.2003	.6261	.0519	.4777	.9036	.3294
819	.2197	.6455	.0713	.4971	.9229	.3488	.7746	.2004	.6262	.0520	.4778	.9037	.3295
822	.2197	.6456	.0714	.4972	.9230	.3488	.7747	.2005	.6263	.0521	.4779	.9038	.3296
425825	10.2198	10.6456	11.0715	11.4973	11.9231	12.3489	12.7748	13.2006	13.6264	14.0522	14.4781	14.9039	15.3297
828	.2199	.6457	.0715	.4974	.9232	.3490	.7748	.2007	.6265	.0523	.4782	.9040	.3298
831	.2199	.6458	.0716	.4974	.9233	.3491	.7749	.2008	.6266	.0524	.4783	.9041	.3299
834	.2200	.6459	.0717	.4975	.9234	.3492	.7750	.2009	.6267	.0525	.4784	.9042	.3300
837	.2201	.6459	.0718	.4976	.9234	.3493	.7751	.2009	.6268	.0526	.4785	.9043	.3301
425840	10.2202	10.6460	11.0718	11.4977	11.9235	12.3494	12.7752	13.2010	13.6269	14.0527	14.4786	14.9044	15.3302
843	.2202	.6461	.0719	.4978	.9236	.3494	.7753	.2011	.6270	.0528	.4787	.9045	.3303
846	.2203	.6462	.0720	.4978	.9237	.3495	.7754	.2012	.6271	.0529	.4788	.9046	.3305
849	.2204	.6462	.0721	.4979	.9238	.3496	.7755	.2013	.6272	.0530	.4789	.9047	.3306
852	.2204	.6463	.0722	.4980	.9239	.3497	.7756	.2014	.6273	.0531	.4790	.9048	.3307
425855	10.2205	10.6464	11.0722	11.4981	11.9239	12.3498	12.7757	13.2015	13.6274	14.0532	14.4791	14.9049	15.3308
858	.2206	.6465	.0723	.4982	.9240	.3499	.7757	.2016	.6275	.0533	.4792	.9050	.3309
861	.2207	.6465	.0724	.4982	.9241	.3500	.7758	.2017	.6276	.0534	.4793	.9051	.3310
864	.2207	.6466	.0725	.4983	.9242	.3501	.7759	.2018	.6276	.0535	.4794	.9052	.3311
867	.2208	.6467	.0725	.4984	.9243	.3501	.7760	.2019	.6277	.0536	.4795	.9053	.3312
425870	10.2209	10.6468	11.0726	11.4985	11.9244	12.3502	12.7761	13.2020	13.6278	14.0537	14.4796	14.9055	15.3313
873	.2210	.6468	.0727	.4986	.9244	.3503	.7762	.2021	.6279	.0538	.4797	.9056	.3314
876	.2210	.6469	.0728	.4987	.9245	.3504	.7763	.2022	.6280	.0539	.4798	.9057	.3315
879	.2211	.6470	.0729	.4987	.9246	.3505	.7764	.2022	.6281	.0540	.4799	.9058	.3316
882	.2212	.6471	.0729	.4988	.9247	.3506	.7765	.2023	.6282	.0541	.4800	.9059	.3318
425885	10.2212	10.6471	11.0730	11.4989	11.9248	12.3507	12.7766	13.2024	13.6283	14.0542	14.4801	14.9060	15.3319
888	.2213	.6472	.0731	.4990	.9249	.3508	.7766	.2025	.6284	.0543	.4802	.9061	.3320
891	.2214	.6473	.0732	.4991	.9249	.3508	.7767	.2026	.6285	.0544	.4803	.9062	.3321
894	.2215	.6474	.0732	.4991	.9250	.3509	.7768	.2027	.6286	.0545	.4804	.9063	.3322
897	.2215	.6474	.0733	.4992	.9251	.3510	.7769	.2028	.6287	.0546	.4805	.9064	.3323
425900	10.2216	10.6475	11.0734	11.4993	11.9252	12.3511	12.7770	13.2029	13.6288	14.0547	14.4806	14.9065	15.3324

MEGACYCLES PER SECOND

H A R M O N I C S

BASIC FREQ.	37	38	39	40	41	42	43	44	45	46	47	48	50
425600	15.7472	16.1728	16.5984	17.0240	17.4496	17.8752	18.3008	18.7264	19.1520	19.5776	20.0032	20.4288	21.2800
603	.7473	.1729	.5985	.0241	.4497	.8753	.3009	.7265	.1521	.5777	.0033	.4289	.2802
606	.7474	.1730	.5986	.0242	.4498	.8755	.3011	.7267	.1523	.5779	.0035	.4291	.2803
609	.7475	.1731	.5988	.0244	.4500	.8756	.3012	.7268	.1524	.5780	.0036	.4292	2805
612	.7476	.1733	.5989	.0245	.4501	.8757	.3013	.7269	.1525	.5782	.0038	.4294	.2806
425615	15.7478	16.1734	16.5990	17.0246	17.4502	17.8758	18.3014	18.7271	19.1527	19.5783	20.0039	20.4295	21.2808
618	.7479	.1735	.5991	.0247	.4503	.8760	.3016	.7272	.1528	.5784	.0040	.4297	.2809
621	.7480	.1736	.5992	.0248	.4505	.8761	.3017	.7273	.1529	.5786	.0042	.4298	.2811
624	.7481	.1737	.5993	.0250	.4506	.8762	.3018	.7275	.1531	.5787	.0043	.4300	.2812
627	.7482	.1738	.5995	.0251	.4507	.8763	.3020	.7276	.1532	.5788	.0045	.4301	.2814
425630	15.7483	16.1739	16.5996	17.0252	17.4508	17.8765	18.3021	18.7277	19.1534	19.5790	20.0046	20.4302	21.2815
633	.7484	.1741	.5997	.0253	.4510	.8766	.3022	.7279	.1535	.5791	.0048	.4304	.2817
636	.7485	.1742	.5998	.0254	.4511	.8767	.3023	.7280	.1536	.5793	.0049	.4305	.2818
639	.7486	.1743	.5999	.0256	.4512	.8768	.3025	.7281	.1538	.5794	.0050	.4307	.2820
642	.7488	.1744	.6000	.0257	.4513	.8770	.3026	.7282	.1539	.5795	.0052	.4308	.2821
425645	15.7489	16.1745	16.6002	17.0258	17.4514	17.8771	18.3027	18.7284	19.1540	19.5797	20.0053	20.4310	21.2823
648	.7490	.1746	.6003	.0259	.4516	.8772	.3029	.7285	.1542	.5798	.0055	.4311	.2824
651	.7491	.1747	.6004	.0260	.4517	.8773	.3030	.7286	.1543	.5799	.0056	.4312	.2826
654	.7492	.1749	.6005	.0262	.4518	.8775	.3031	.7288	.1544	.5801	.0057	.4314	.2827
657	.7493	.1750	.6006	.0263	.4519	.8776	.3033	.7289	.1546	.5802	.0059	.4315	.2829
425660	15.7494	16.1751	16.6007	17.0264	17.4521	17.8777	18.3034	18.7290	19.1547	19.5804	20.0060	20.4317	21.2830
663	.7495	.1752	.6009	.0265	.4522	.8778	.3035	.7292	.1548	.5805	.0062	.4318	.2832
666	.7496	.1753	.6010	.0266	.4523	.8780	.3036	.7293	.1550	.5806	.0063	.4320	.2833
669	.7498	.1754	.6011	.0268	.4524	.8781	.3038	.7294	.1551	.5808	.0064	.4321	.2835
672	.7499	.1755	.6012	.0269	.4526	.8782	.3039	.7296	.1552	.5809	.0066	.4323	.2836
425675	15.7500	16.1757	16.6013	17.0270	17.4527	17.8784	18.3040	18.7297	19.1554	19.5811	20.0067	20.4324	21.2838
678	.7501	.1758	.6014	.0271	.4528	.8785	.3042	.7298	.1555	.5812	.0069	.4325	.2839
681	.7502	.1759	.6016	.0272	.4529	.8786	.3043	.7300	.1556	.5813	.0070	.4327	.2841
684	.7503	.1760	.6017	.0274	.4530	.8787	.3044	.7301	.1558	.5815	.0071	.4328	.2842
687	.7504	.1761	.6018	.0275	.4532	.8789	.3045	.7302	.1559	.5816	.0073	.4330	.2844
425690	15.7505	16.1762	16.6019	17.0276	17.4533	17.8790	18.3047	18.7304	19.1561	19.5817	20.0074	20.4331	21.2845
693	.7506	.1763	.6020	.0277	.4534	.8791	.3048	.7305	.1562	.5819	.0076	.4333	.2847
696	.7508	.1764	.6021	.0278	.4535	.8792	.3049	.7306	.1563	.5820	.0077	.4334	.2848
699	.7509	.1766	.6023	.0280	.4537	.8794	.3051	.7308	.1565	.5822	.0079	.4336	.2850
702	.7510	.1767	.6024	.0281	.4538	.8795	.3052	.7309	.1566	.5823	.0080	.4337	.2851
425705	15.7511	16.1768	16.6025	17.0282	17.4539	17.8796	18.3053	18.7310	19.1567	19.5824	20.0081	20.4338	21.2853
708	.7512	.1769	.6026	.0283	.4540	.8797	.3054	.7312	.1569	.5826	.0083	.4340	.2854
711	.7513	.1770	.6027	.0284	.4542	.8799	.3056	.7313	.1570	.5827	.0084	.4341	.2856
714	.7514	.1771	.6028	.0286	.4543	.8800	.3057	.7314	.1571	.5828	.0086	.4343	.2857
717	.7515	.1772	.6030	.0287	.4544	.8801	.3058	.7315	.1573	.5830	.0087	.4344	.2859
425720	15.7516	16.1774	16.6031	17.0288	17.4545	17.8802	18.3060	18.7317	19.1574	19.5831	20.0088	20.4346	21.2860
723	.7518	.1775	.6032	.0289	.4546	.8804	.3061	.7318	.1575	.5833	.0090	.4347	.2862
726	.7519	.1776	.6033	.0290	.4548	.8805	.3062	.7319	.1577	.5834	.0091	.4348	.2863
729	.7520	.1777	.6034	.0292	.4549	.8806	.3063	.7321	.1578	.5835	.0093	.4350	.2865
732	.7521	.1778	.6035	.0293	.4550	.8807	.3065	.7322	.1579	.5837	.0094	.4351	.2866
425735	15.7522	16.1779	16.6037	17.0294	17.4551	17.8809	18.3066	18.7323	19.1581	19.5838	20.0095	20.4353	21.2868
738	.7523	.1780	.6038	.0295	.4553	.8810	.3067	.7325	.1582	.5839	.0097	.4354	.2869
741	.7524	.1782	.6039	.0296	.4554	.8811	.3069	.7326	.1583	.5841	.0098	.4356	.2871
744	.7525	.1783	.6040	.0298	.4555	.8812	.3070	.7327	.1585	.5842	.0100	.4357	.2872
747	.7526	.1784	.6041	.0299	.4556	.8814	.3071	.7329	.1586	.5844	.0101	.4359	.2874
425750	15.7528	16.1785	16.6043	17.0300	17.4558	17.8815	18.3073	18.7330	19.1588	19.5845	20.0103	20.4360	21.2875
753	.7529	.1786	.6044	.0301	.4559	.8816	.3074	.7331	.1589	.5846	.0104	.4361	.2877
756	.7530	.1787	.6045	.0302	.4560	.8818	.3075	.7333	.1590	.5848	.0105	.4363	.2878
759	.7531	.1788	.6046	.0304	.4561	.8819	.3076	.7334	.1592	.5849	.0107	.4364	.2880
762	.7532	.1790	.6047	.0305	.4562	.8820	.3078	.7335	.1593	.5851	.0108	.4366	.2881
425765	15.7533	16.1791	16.6048	17.0306	17.4564	17.8821	18.3079	18.7337	19.1594	19.5852	20.0110	20.4367	21.2883
768	.7534	.1792	.6050	.0307	.4565	.8823	.3080	.7338	.1596	.5853	.0111	.4369	.2884
771	.7535	.1793	.6051	.0308	.4566	.8824	.3082	.7339	.1597	.5855	.0112	.4370	.2886
774	.7536	.1794	.6052	.0310	.4567	.8825	.3083	.7341	.1598	.5856	.0114	.4372	.2887
777	.7537	.1795	.6053	.0311	.4569	.8826	.3084	.7342	.1600	.5857	.0115	.4373	.2889
425780	15.7539	16.1796	16.6054	17.0312	17.4570	17.8828	18.3085	18.7343	19.1601	19.5859	20.0117	20.4374	21.2890
783	.7540	.1798	.6055	.0313	.4571	.8829	.3087	.7345	.1602	.5860	.0118	.4376	.2892
786	.7541	.1799	.6057	.0314	.4572	.8830	.3088	.7346	.1604	.5862	.0119	.4377	.2893
789	.7542	.1800	.6058	.0316	.4573	.8831	.3089	.7347	.1605	.5863	.0121	.4379	.2895
792	.7543	.1801	.6059	.0317	.4575	.8833	.3091	.7348	.1606	.5864	.0122	.4380	.2896
425795	15.7544	16.1802	16.6060	17.0318	17.4576	17.8834	18.3092	18.7350	19.1608	19.5866	20.0124	20.4382	21.2898
798	.7545	.1803	.6061	.0319	.4577	.8835	.3093	.7351	.1609	.5867	.0125	.4383	.2899
801	.7546	.1804	.6062	.0320	.4578	.8836	.3094	.7352	.1610	.5868	.0126	.4384	.2901
804	.7547	.1806	.6064	.0322	.4580	.8838	.3096	.7354	.1612	.5870	.0128	.4386	.2902
807	.7549	.1807	.6065	.0323	.4581	.8839	.3097	.7355	.1613	.5871	.0129	.4387	.2904
425810	15.7550	16.1808	16.6066	17.0324	17.4582	17.8840	18.3098	18.7356	19.1615	19.5873	20.0131	20.4389	21.2905
813	.7551	.1809	.6067	.0325	.4583	.8841	.3100	.7358	.1616	.5874	.0132	.4390	.2907
816	.7552	.1810	.6068	.0326	.4585	.8843	.3101	.7359	.1617	.5875	.0134	.4392	.2908
819	.7553	.1811	.6069	.0328	.4586	.8844	.3102	.7360	.1619	.5877	.0135	.4393	.2910
822	.7554	.1812	.6071	.0329	.4587	.8845	.3103	.7362	.1620	.5878	.0136	.4395	.2911
425825	15.7555	16.1814	16.6072	17.0330	17.4588	17.8847	18.3105	18.7363	19.1621	19.5880	20.0138	20.4396	21.2913
828	.7556	.1815	.6073	.0331	.4589	.8848	.3106	.7364	.1623	.5881	.0139	.4397	.2914
831	.7557	.1816	.6074	.0332	.4591	.8849	.3107	.7366	.1624	.5882	.0141	.4399	.2916
834	.7559	.1817	.6075	.0334	.4592	.8850	.3109	.7367	.1625	.5884	.0142	.4400	.2917
837	.7560	.1818	.6076	.0335	.4593	.8852	.3110	.7368	.1627	.5885	.0143	4402	.2919
425840	15.7561	16.1819	16.6078	17.0336	17.4594	17.8853	18.3111	18.7370	19.1628	19.5886	20.0145	20.4403	21.2920
843	.7562	.1820	.6079	.0337	.4596	.8854	.3112	.7371	.1629	.5888	.0146	.4405	.2922
846	.7563	.1821	.6080	.0338	.4597	.8855	.3114	.7372	.1631	.5889	.0148	.4406	.2923
849	.7564	.1823	.6081	.0340	.4598	.8857	.3115	.7374	.1632	.5891	.0149	.4408	.2925
852	.7565	.1824	.6082	.0341	.4599	.8858	.3116	.7375	.1633	.5892	.0150	.4409	.2926
425855	15.7566	16.1825	16.6083	17.0342	17.4601	17.8859	18.3118	18.7376	19.1635	19.5893	20.0152	20.4410	21.2928
858	.7567	.1826	.6085	.0343	.4602	.8860	.3119	.7378	.1636	.5895	.0153	.4412	.2929
861	.7569	.1827	.6086	.0344	.4603	.8862	.3120	.7379	.1637	.5896	.0155	.4413	.2931
864	.7570	.1828	.6087	.0346	.4604	.8863	.3122	.7380	.1639	.5897	.0156	.4415	.2932
867	.7571	.1829	.6088	.0347	.4605	.8864	.3123	.7381	.1640	.5899	.0157	.4416	.2934
425870	15.7572	16.1831	16.6089	17.0348	17.4607	17.8865	18.3124	18.7383	19.1642	19.5900	20.0159	20.4418	21.2935
873	.7573	.1832	.6090	.0349	.4608	.8867	.3125	.7384	.1643	.5902	.0160	.4419	.2937
876	.7574	.1833	.6092	.0350	.4609	.8868	.3127	.7385	.1644	.5903	.0162	.4420	.2938
879	.7575	.1834	.6093	.0352	.4610	.8869	.3128	.7387	.1646	.5904	.0163	.4422	.2940
882	.7576	.1835	.6094	.0353	.4612	.8870	.3129	.7388	.1647	.5906	.0165	.4423	.2941
425885	15.7577	16.1836	16.6095	17.0354	17.4613	17.8872	18.3131	18.7389	19.1648	19.5907	20.0166	20.4425	21.2943
888	.7579	.1837	.6096	.0355	.4614	.8873	.3132	.7391	.1650	.5908	.0167	.4426	.2944
891	.7580	.1839	.6097	.0356	.4615	.8874	.3133	.7392	.1651	.5910	.0169	.4428	.2946
894	.7581	.1840	.6099	.0358	.4617	.8875	.3134	.7393	.1652	.5911	.0170	.4429	.2947
897	.7582	.1841	.6100	.0359	.4618	.8877	.3136	.7395	.1654	.5913	.0172	.4431	.2949
425900	15.7583	16.1842	16.6101	17.0360	17.4619	17.8878	18.3137	18.7396	19.1655	19.5914	20.0173	20.4432	21.2950

HARMONICS

BASIC FREQ.	24	25	26	27	28	29	30	31	32	33	34	35	36
425900	10.2216	10.6475	11.0734	11.4993	11.9252	12.3511	12.7770	13.2029	13.6288	14.0547	14.4806	14.9065	15.3324
903	.2217	.6476	.0735	.4994	.9253	.3512	.7771	.2030	.6289	.0548	.4807	.9066	.3325
906	.2217	.6477	.0736	.4995	.9254	.3513	.7772	.2031	.6290	.0549	.4808	.9067	.3326
909	.2218	.6477	.0736	.4995	.9255	.3514	.7773	.2032	.6291	.0550	.4809	.9068	.3327
912	.2219	.6478	.0737	.4996	.9255	.3514	.7774	.2033	.6292	.0551	.4810	.9069	.3328
425915	10.2220	10.6479	11.0738	11.4997	11.9256	12.3515	12.7775	13.2034	13.6293	14.0552	14.4811	14.9070	15.3329
918	.2220	.6480	.0739	.4998	.9257	.3516	.7775	.2035	.6294	.0553	.4812	.9071	.3330
921	.2221	.6480	.0739	.4999	.9258	.3517	.7776	.2036	.6295	.0554	.4813	.9072	.3332
924	.2222	.6481	.0740	.4999	.9259	.3518	.7777	.2036	.6296	.0555	.4814	.9073	.3333
927	.2222	.6482	.0741	.5000	.9260	.3519	.7778	.2037	.6297	.0556	.4815	.9074	.3334
425930	10.2223	10.6483	11.0742	11.5001	11.9260	12.3520	12.7779	13.2038	13.6298	14.0557	14.4816	14.9076	15.3335
933	.2224	.6483	.0743	.5002	.9261	.3521	.7780	.2039	.6299	.0558	.4817	.9077	.3336
936	.2225	.6484	.0743	.5003	.9262	.3521	.7781	.2040	.6300	.0559	.4818	.9078	.3337
939	.2225	.6485	.0744	.5004	.9263	.3522	.7782	.2041	.6300	.0560	.4819	.9079	.3338
942	.2226	.6486	.0745	.5004	.9264	.3523	.7783	.2042	.6301	.0561	.4820	.9080	.3339
425945	10.2227	10.6486	11.0746	11.5005	11.9265	12.3524	12.7784	13.2043	13.6302	14.0562	14.4821	14.9081	15.3340
948	.2228	.6487	.0746	.5006	.9265	.3525	.7784	.2044	.6303	.0563	.4822	.9082	.3341
951	.2228	.6488	.0747	.5007	.9266	.3526	.7785	.2045	.6304	.0564	.4823	.9083	.3342
954	.2229	.6489	.0748	.5008	.9267	.3527	.7786	.2046	.6305	.0565	.4824	.9084	.3343
957	.2230	.6489	.0749	.5008	.9268	.3528	.7787	.2047	.6306	.0566	.4825	.9085	.3345
425960	10.2230	10.6490	11.0750	11.5009	11.9269	12.3528	12.7788	13.2048	13.6307	14.0567	14.4826	14.9086	15.3346
963	.2231	.6491	.0750	.5010	.9270	.3529	.7789	.2049	.6308	.0568	.4827	.9087	.3347
966	.2232	.6492	.0751	.5011	.9270	.3530	.7790	.2049	.6309	.0569	.4828	.9088	.3348
969	.2233	.6492	.0752	.5012	.9271	.3531	.7791	.2050	.6310	.0570	.4829	.9089	.3349
972	.2233	.6493	.0753	.5012	.9272	.3532	.7792	.2051	.6311	.0571	.4830	.9090	.3350
425975	10.2234	10.6494	11.0754	11.5013	11.9273	12.3533	12.7793	13.2052	13.6312	14.0572	14.4832	14.9091	15.3351
978	.2235	.6495	.0754	.5014	.9274	.3534	.7793	.2053	.6313	.0573	.4833	.9092	.3352
981	.2235	.6495	.0755	.5015	.9275	.3534	.7794	.2054	.6314	.0574	.4834	.9093	.3353
984	.2236	.6496	.0756	.5016	.9276	.3535	.7795	.2055	.6315	.0575	.4835	.9094	.3354
987	.2237	.6497	.0757	.5016	.9276	.3536	.7796	.2056	.6316	.0576	.4836	.9095	.3355
425990	10.2238	10.6498	11.0757	11.5017	11.9277	12.3537	12.7797	13.2057	13.6317	14.0577	14.4837	14.9097	15.3356
993	.2238	.6498	.0758	.5018	.9278	.3538	.7798	.2058	.6318	.0578	.4838	.9098	.3357
996	.2239	.6499	.0759	.5019	.9279	.3539	.7799	.2059	.6319	.0579	.4839	.9099	.3359
999	.2240	.6500	.0760	.5020	.9280	.3540	.7800	.2060	.6320	.0580	.4840	.9100	.3360
426002	.2240	.6501	.0761	.5021	.9281	.3541	.7801	.2061	.6321	.0581	.4841	.9101	.3361
426005	10.2241	10.6501	11.0761	11.5021	11.9281	12.3541	12.7802	13.2062	13.6322	14.0582	14.4842	14.9102	15.3362
008	.2242	.6502	.0762	.5022	.9282	.3542	.7802	.2062	.6323	.0583	.4843	.9103	.3363
011	.2243	.6503	.0763	.5023	.9283	.3543	.7803	.2063	.6324	.0584	.4844	.9104	.3364
014	.2243	.6504	.0764	.5024	.9284	.3544	.7804	.2064	.6324	.0585	.4845	.9105	.3365
017	.2244	.6504	.0764	.5025	.9285	.3545	.7805	.2065	.6325	.0586	.4846	.9106	.3366
426020	10.2245	10.6505	11.0765	11.5025	11.9286	12.3546	12.7806	13.2066	13.6326	14.0587	14.4847	14.9107	15.3367
023	.2246	.6506	.0766	.5026	.9286	.3547	.7807	.2067	.6327	.0588	.4848	.9108	.3368
026	.2246	.6507	.0767	.5027	.9287	.3548	.7808	.2068	.6328	.0589	.4849	.9109	.3369
029	.2247	.6507	.0768	.5028	.9288	.3548	.7809	.2069	.6329	.0590	.4850	.9110	.3370
032	.2248	.6508	.0768	.5029	.9289	.3549	.7810	.2070	.6330	.0591	.4851	.9111	.3372
426035	10.2248	10.6509	11.0769	11.5029	11.9290	12.3550	12.7811	13.2071	13.6331	14.0592	14.4852	14.9112	15.3373
038	.2249	.6510	.0770	.5030	.9291	.3551	.7811	.2072	.6332	.0593	.4853	.9113	.3374
041	.2250	.6510	.0771	.5031	.9291	.3552	.7812	.2073	.6333	.0594	.4854	.9114	.3375
044	.2251	.6511	.0771	.5032	.9292	.3553	.7813	.2074	.6334	.0595	.4855	.9115	.3376
047	.2251	.6512	.0772	.5033	.9293	.3554	.7814	.2075	.6335	.0596	.4856	.9116	.3377
426050	10.2252	10.6513	11.0773	11.5034	11.9294	12.3555	12.7815	13.2076	13.6336	14.0597	14.4857	14.9118	15.3378
053	.2253	.6513	.0774	.5034	.9295	.3555	.7816	.2076	.6337	.0597	.4858	.9119	.3379
056	.2253	.6514	.0775	.5035	.9296	.3556	.7817	.2077	.6338	.0598	.4859	.9120	.3380
059	.2254	.6515	.0775	.5036	.9297	.3557	.7818	.2078	.6339	.0599	.4860	.9121	.3381
062	.2255	.6516	.0776	.5037	.9297	.3558	.7819	.2079	.6340	.0600	.4861	.9122	.3382
426065	10.2256	10.6516	11.0777	11.5038	11.9298	12.3559	12.7820	13.2080	13.6341	14.0601	14.4862	14.9123	15.3383
068	.2256	.6517	.0778	.5038	.9299	.3560	.7820	.2081	.6342	.0602	.4863	.9124	.3384
071	.2257	.6518	.0778	.5039	.9300	.3561	.7821	.2082	.6343	.0603	.4864	.9125	.3386
074	.2258	.6519	.0779	.5040	.9301	.3561	.7822	.2083	.6344	.0604	.4865	.9126	.3387
077	.2258	.6519	.0780	.5041	.9302	.3562	.7823	.2084	.6345	.0605	.4866	.9127	.3388
426080	10.2259	10.6520	11.0781	11.5042	11.9302	12.3563	12.7824	13.2085	13.6346	14.0606	14.4867	14.9128	15.3389
083	.2260	.6521	.0782	.5042	.9303	.3564	.7825	.2086	.6347	.0607	.4868	.9129	.3390
086	.2261	.6522	.0782	.5043	.9304	.3565	.7826	.2087	.6348	.0608	.4869	.9130	.3391
089	.2261	.6522	.0783	.5044	.9305	.3566	.7827	.2088	.6348	.0609	.4870	.9131	.3392
092	.2262	.6523	.0784	.5045	.9306	.3567	.7828	.2089	.6349	.0610	.4871	.9132	.3393
426095	10.2263	10.6524	11.0785	11.5046	11.9307	12.3568	12.7829	13.2089	13.6350	14.0611	14.4872	14.9133	15.3394
098	.2264	.6525	.0785	.5046	.9307	.3568	.7829	.2090	.6351	.0612	.4873	.9134	.3395
101	.2264	.6525	.0786	.5047	.9308	.3569	.7830	.2091	.6352	.0613	.4874	.9135	.3396
104	.2265	.6526	.0787	.5048	.9309	.3570	.7831	.2092	.6353	.0614	.4875	.9136	.3397
107	.2266	.6527	.0788	.5049	.9310	.3571	.7832	.2093	.6354	.0615	.4876	.9137	.3399
426110	10.2266	10.6528	11.0789	11.5050	11.9311	12.3572	12.7833	13.2094	13.6355	14.0616	14.4877	14.9139	15.3400
113	.2267	.6528	.0789	.5051	.9312	.3573	.7834	.2095	.6356	.0617	.4878	.9140	.3401
116	.2268	.6529	.0790	.5051	.9312	.3574	.7835	.2096	.6357	.0618	.4879	.9141	.3402
119	.2269	.6530	.0791	.5052	.9313	.3575	.7836	.2097	.6358	.0619	.4880	.9142	.3403
122	.2269	.6531	.0792	.5053	.9314	.3575	.7837	.2098	.6359	.0620	.4881	.9143	.3404
426125	10.2270	10.6531	11.0793	11.5054	11.9315	12.3576	12.7838	13.2099	13.6360	14.0621	14.4883	14.9144	15.3405
128	.2271	.6532	.0793	.5055	.9316	.3577	.7838	.2100	.6361	.0622	.4884	.9145	.3406
131	.2271	.6533	.0794	.5055	.9317	.3578	.7839	.2101	.6362	.0623	.4885	.9146	.3407
134	.2272	.6534	.0795	.5056	.9318	.3579	.7840	.2102	.6363	.0624	.4886	.9147	.3408
137	.2273	.6534	.0796	.5057	.9318	.3580	.7841	.2102	.6364	.0625	.4887	.9148	.3409
426140	10.2274	10.6535	11.0796	11.5058	11.9319	12.3581	12.7842	13.2103	13.6365	14.0626	14.4888	14.9149	15.3410
143	.2274	.6536	.0797	.5059	.9320	.3581	.7843	.2104	.6366	.0627	.4889	.9150	.3411
146	.2275	.6537	.0798	.5059	.9321	.3582	.7844	.2105	.6367	.0628	.4890	.9151	.3413
149	.2276	.6537	.0799	.5060	.9322	.3583	.7845	.2106	.6368	.0629	.4891	.9152	.3414
152	.2276	.6538	.0800	.5061	.9323	.3584	.7846	.2107	.6369	.0630	.4892	.9153	.3415
426155	10.2277	10.6539	11.0800	11.5062	11.9323	12.3585	12.7847	13.2108	13.6370	14.0631	14.4893	14.9154	15.3416
158	.2278	.6540	.0801	.5063	.9324	.3586	.7847	.2109	.6371	.0632	.4894	.9155	.3417
161	.2279	.6540	.0802	.5063	.9325	.3587	.7848	.2110	.6372	.0633	.4895	.9156	.3418
164	.2279	.6541	.0803	.5064	.9326	.3588	.7849	.2111	.6372	.0634	.4896	.9157	.3419
167	.2280	.6542	.0803	.5065	.9327	.3588	.7850	.2112	.6373	.0635	.4897	.9158	.3420
426170	10.2281	10.6543	11.0804	11.5066	11.9328	12.3589	12.7851	13.2113	13.6374	14.0636	14.4898	14.9160	15.3421
173	.2282	.6543	.0805	.5067	.9328	.3590	.7852	.2114	.6375	.0637	.4899	.9161	.3422
176	.2282	.6544	.0806	.5068	.9329	.3591	.7853	.2115	.6376	.0638	.4900	.9162	.3423
179	.2283	.6545	.0807	.5068	.9330	.3592	.7854	.2115	.6377	.0639	.4901	.9163	.3424
182	.2284	.6546	.0807	.5069	.9331	.3593	.7855	.2116	.6378	.0640	.4902	.9164	.3426
426185	10.2284	10.6546	11.0808	11.5070	11.9332	12.3594	12.7856	13.2117	13.6379	14.0641	14.4903	14.9165	15.3427
188	.2285	.6547	.0809	.5071	.9333	.3595	.7856	.2118	.6380	.0642	.4904	.9166	.3428
191	.2286	.6548	.0810	.5072	.9333	.3595	.7857	.2119	.6381	.0643	.4905	.9167	.3429
194	.2287	.6549	.0810	.5072	.9334	.3596	.7858	.2120	.6382	.0644	.4906	.9168	.3430
197	.2287	.6549	.0811	.5073	.9335	.3597	.7859	.2121	.6383	.0645	.4907	.9169	.3431
426200	10.2288	10.6550	11.0812	11.5074	11.9336	12.3598	12.7860	13.2122	13.6384	14.0646	14.4908	14.9170	15.3432

MEGACYCLES PER SECOND

H A R M O N I C S

BASIC FREQ.	37	38	39	40	41	42	43	44	45	46	47	48	50
425900	15.7583	16.1842	16.6101	17.0360	17.4619	17.8878	18.3137	18.7396	19.1655	19.5914	20.0173	20.4432	21.2950
903	.7584	.1843	.6102	.0361	.4620	.8879	.3138	.7397	.1656	.5915	.0174	.4433	.2952
906	.7585	.1844	.6103	.0362	.4621	.8881	.3140	.7399	.1658	.5917	.0176	.4435	.2953
909	.7586	.1845	.6105	.0364	.4623	.8882	.3141	.7400	.1659	.5918	.0177	.4436	.2955
912	.7587	.1847	.6106	.0365	.4624	.8883	.3142	.7401	.1660	.5920	.0179	.4438	.2956
425915	15.7589	16.1848	16.6107	17.0366	17.4625	17.8884	18.3143	18.7403	19.1662	19.5921	20.0180	20.4439	21.2958
918	.7590	.1849	.6108	.0367	.4626	.8886	.3145	.7404	.1663	.5922	.0181	.4441	.2959
921	.7591	.1850	.6109	.0368	.4628	.8887	.3146	.7405	.1664	.5924	.0183	.4442	.2961
924	.7592	.1851	.6110	.0370	.4629	.8888	.3147	.7407	.1666	.5925	.0184	.4444	.2962
927	.7593	.1852	.6112	.0371	.4630	.8889	.3149	.7408	.1667	.5926	.0186	.4445	.2964
425930	15.7594	16.1853	16.6113	17.0372	17.4631	17.8891	18.3150	18.7409	19.1669	19.5928	20.0187	20.4446	21.2965
933	.7595	.1855	.6114	.0373	.4633	.8892	.3151	.7411	.1670	.5929	.0189	.4448	.2967
936	.7596	.1856	.6115	.0374	.4634	.8893	.3152	.7412	.1671	.5931	.0190	.4449	.2968
939	.7597	.1857	.6116	.0376	.4635	.8894	.3154	.7413	.1673	.5932	.0191	.4451	.2970
942	.7599	.1858	.6117	.0377	.4636	.8896	.3155	.7414	.1674	.5933	.0193	.4452	.2971
425945	15.7600	16.1859	16.6119	17.0378	17.4637	17.8897	18.3156	18.7416	19.1675	19.5935	20.0194	20.4454	21.2973
948	.7601	.1860	.6120	.0379	.4639	.8898	.3158	.7417	.1677	.5936	.0196	.4455	.2974
951	.7602	.1861	.6121	.0380	.4640	.8899	.3159	.7418	.1678	.5937	.0197	.4456	.2976
954	.7603	.1863	.6122	.0382	.4641	.8901	.3160	.7420	.1679	.5939	.0198	.4458	.2977
957	.7604	.1864	.6123	.0383	.4642	.8902	.3162	.7421	.1681	.5940	.0200	.4459	.2979
425960	15.7605	16.1865	16.6124	17.0384	17.4644	17.8903	18.3163	18.7422	19.1682	19.5942	20.0201	20.4461	21.2980
963	.7606	.1866	.6126	.0385	.4645	.8904	.3164	.7424	.1683	.5943	.0203	.4462	.2982
966	.7607	.1867	.6127	.0386	.4646	.8906	.3165	.7425	.1685	.5944	.0204	.4464	.2983
969	.7609	.1868	.6128	.0388	.4647	.8907	.3167	.7426	.1686	.5946	.0205	.4465	.2985
972	.7610	.1869	.6129	.0389	.4649	.8908	.3168	.7428	.1687	.5947	.0207	.4467	.2986
425975	15.7611	16.1871	16.6130	17.0390	17.4650	17.8910	18.3169	18.7429	19.1689	19.5949	20.0208	20.4468	21.2988
978	.7612	.1872	.6131	.0391	.4651	.8911	.3171	.7430	.1690	.5950	.0210	.4469	.2989
981	.7613	.1873	.6133	.0392	.4652	.8912	.3172	.7432	.1691	.5951	.0211	.4471	.2991
984	.7614	.1874	.6134	.0394	.4653	.8913	.3173	.7433	.1693	.5953	.0212	.4472	.2992
987	.7615	.1875	.6135	.0395	.4655	.8915	.3174	.7434	.1694	.5954	.0214	.4474	.2994
425990	15.7616	16.1876	16.6136	17.0396	17.4656	17.8916	18.3176	18.7436	19.1696	19.5955	20.0215	20.4475	21.2995
993	.7617	.1877	.6137	.0397	.4657	.8917	.3177	.7437	.1697	.5957	.0217	.4477	.2997
996	.7619	.1878	.6138	.0398	.4658	.8918	.3178	.7438	.1698	.5958	.0218	.4478	.2998
999	.7620	.1880	.6140	.0400	.4660	.8920	.3180	.7440	.1700	.5960	.0220	.4480	.3000
426002	.7621	.1881	.6141	.0401	.4661	.8921	.3181	.7441	.1701	.5961	.0221	.4481	.3001
426005	15.7622	16.1882	16.6142	17.0402	17.4662	17.8922	18.3182	18.7442	19.1702	19.5962	20.0222	20.4482	21.3003
008	.7623	.1883	.6143	.0403	.4663	.8923	.3183	.7444	.1704	.5964	.0224	.4484	3004
011	.7624	.1884	.6144	.0404	.4665	.8925	.3185	.7445	.1705	.5965	.0225	.4485	.3006
014	.7625	.1885	.6145	.0406	.4666	.8926	.3186	.7446	.1706	.5966	.0227	.4487	.3007
017	.7626	.1886	.6147	.0407	.4667	.8927	.3187	.7447	.1708	.5968	.0228	.4488	.3009
426020	15.7627	16.1888	16.6148	17.0408	17.4668	17.8928	18.3189	18.7449	19.1709	19.5969	20.0229	20.4490	21.3010
023	.7629	.1889	.6149	.0409	.4669	.8930	.3190	.7450	.1710	.5971	.0231	.4491	.3012
026	.7630	.1890	.6150	.0410	.4671	.8931	.3191	.7451	.1712	.5972	.0232	.4492	.3013
029	.7631	.1891	.6151	.0412	.4672	.8932	.3192	.7453	.1713	.5973	.0234	.4494	.3015
032	.7632	.1892	.6152	.0413	.4673	.8933	.3194	.7454	.1714	.5975	.0235	.4495	.3016
426035	15.7633	16.1893	16.6154	17.0414	17.4674	17.8935	18.3195	18.7455	19.1716	19.5976	20.0236	20.4497	21.3018
038	.7634	.1894	. 6155	.0415	.4676	.8936	.3196	.7457	.1717	.5977	.0238	.4498	.3019
041	.7635	.1896	.6156	.0416	.4677	.8937	.3198	.7458	.1718	.5979	.0239	.4500	.3021
044	.7636	.1897	.6157	.0418	.4678	.8938	.3199	.7459	.1720	.5980	.0241	.4501	.3022
047	.7637	.1898	.6158	.0419	.4679	.8940	.3200	.7461	.1721	.5982	.0242	.4503	.3024
426050	15.7639	16.1899	16.6160	17.0420	17.4681	17.8941	18.3202	18.7462	19.1723	19.5983	20.0244	20.4504	21.3025
053	.7640	.1900	.6161	.0421	.4682	.8942	.3203	.7463	.1724	.5984	.0245	.4505	.3027
056	.7641	.1901	.6162	.0422	.4683	.8944	.3204	.7465	.1725	.5986	.0246	.4507	.3028
059	.7642	.1902	.6163	.0424	.4684	.8945	.3205	.7466	.1727	.5987	.0248	.4508	.3030
062	.7643	.1904	.6164	.0425	.4685	.8946	.3207	.7467	.1728	.5989	.0249	.4510	.3031
426065	15.7644	16.1905	16.6165	17.0426	17.4687	17.8947	18.3208	18.7469	19.1729	19.5990	20.0251	20.4511	21.3033
068	.7645	.1906	.6167	.0427	.4688	.8949	.3209	.7470	.1731	.5991	.0252	.4513	.3034
071	.7646	.1907	.6168	.0428	.4689	.8950	.3211	.7471	.1732	.5993	.0253	.4514	.3036
074	.7647	.1908	.6169	.0430	.4690	.8951	.3212	.7473	.1733	.5994	.0255	.4516	.3037
077	.7648	.1909	.6170	.0431	.4692	.8952	.3213	.7474	.1735	.5995	.0256	.4517	.3039
426080	15.7650	16.1910	16.6171	17.0432	17.4693	17.8954	18.3214	18.7475	19.1736	19.5997	20.0258	20.4518	21.3040
083	.7651	.1912	.6172	.0433	.4694	.8955	.3216	.7477	.1737	.5998	.0259	.4520	.3042
086	.7652	.1913	.6174	.0434	.4695	.8956	.3217	.7478	.1739	.6000	.0260	.4521	.3043
089	.7653	.1914	.6175	.0436	.4696	.8957	.3218	.7479	.1740	.6001	.0262	.4523	.3045
092	.7654	.1915	.6176	.0437	.4698	.8959	.3220	.7480	.1741	.6002	.0263	.4524	.3046
426095	15.7655	16.1916	16.6177	17.0438	16.4699	17.8960	18.3221	18.7482	19.1743	19.6004	20.0265	20.4526	21.3048
098	.7656	.1917	.6178	.0439	.4700	.8961	.3222	.7483	.1744	.6005	.0266	.4527	.3049
101	.7657	.1918	.6179	.0440	.4701	.8962	.3223	.7484	.1745	.6006	.0267	.4528	.3051
104	.7658	.1920	.6181	.0442	.4703	.8964	.3225	.7486	.1747	.6008	.0269	.4530	.3052
107	.7660	.1921	.6182	.0443	.4704	.8965	.3226	.7487	.1748	.6009	.0270	.4531	.3054
426110	15.7661	16.1922	16.6183	17.0444	17.4705	17.8966	18.3227	18.7488	19.1750	19.6011	20.0272	20.4533	21.3055
113	.7662	.1923	.6184	.0445	.4706	.8967	.3229	.7490	.1751	.6012	.0273	.4534	.3057
116	.7663	.1924	.6185	.0446	.4708	.8969	.3230	.7491	.1752	.6013	.0275	.4536	.3058
119	.7664	.1925	.6186	.0448	.4709	.8970	.3231	.7492	.1754	.6015	.0276	.4537	.3060
122	.7665	.1926	.6188	.0449	.4710	.8971	.3232	.7494	.1755	.6016	.0277	.4539	.3061
426125	15.7666	16.1928	16.6189	17.0450	17.4711	17.8973	18.3234	18.7495	19.1756	19.6018	20.0279	20.4540	21.3063
128	.7667	.1929	.6190	.0451	.4712	.8974	.3235	.7496	.1758	.6019	.0280	.4541	.3064
131	.7668	.1930	.6191	.0452	.4714	.8975	.3236	.7498	.1759	.6020	.0282	.4543	.3066
134	.7670	.1931	.6192	.0454	.4715	.8976	.3238	.7499	.1760	.6022	.0283	.4544	.3067
137	.7671	.1932	.6193	.0455	.4716	.8978	.3239	.7500	.1762	.6023	.0284	.4546	.3069
426140	15.7672	16.1933	16.6195	17.0456	17.4717	17.8979	18.3240	18.7502	19.1763	19.6024	20.0286	20.4547	21.3070
143	.7673	.1934	.6196	.0457	.4719	.8980	.3241	.7503	.1764	.6026	.0287	.4549	.3072
146	.7674	.1935	.6197	.0458	.4720	.8981	.3243	.7504	.1766	.6027	.0289	.4550	.3073
149	.7675	.1937	.6198	.0460	.4721	.8983	.3244	.7506	.1767	.6029	.0290	.4552	.3075
152	.7676	.1938	.6199	.0461	.4722	.8984	.3245	.7507	.1768	.6030	.0291	.4553	.3076
426155	15.7677	16.1939	16.6200	17.0462	17.4724	17.8985	18.3247	18.7508	19.1770	19.6031	20.0293	20.4554	21.3078
158	.7678	.1940	.6202	.0463	.4725	.8986	.3248	.7510	.1771	.6033	.0294	.4556	.3079
161	.7680	.1941	.6203	.0464	.4726	.8988	.3249	.7511	.1772	.6034	.0296	.4557	.3081
164	.7681	.1942	.6204	.0466	.4727	.8989	.3251	.7512	.1774	.6035	.0297	.4559	.3082
167	.7682	.1943	.6205	.0467	.4728	.8990	.3252	.7513	.1775	.6037	.0298	.4560	.3084
426170	15.7683	16.1945	16.6206	17.0468	17.4730	17.8991	18.3253	18.7515	19.1777	19.6038	20.0300	20.4562	21.3085
173	.7684	.1946	.6207	.0469	.4731	.8993	.3254	.7516	.1778	.6040	.0301	.4563	.3087
176	.7685	.1947	.6209	.0470	.4732	.8994	.3256	.7517	.1779	.6041	.0303	.4564	.3088
179	.7686	.1948	.6210	.0472	.4733	.8995	.3257	.7519	.1781	.6042	.0304	.4566	.3090
182	.7687	.1949	.6211	.0473	.4735	.8996	.3258	.7520	.1782	.6044	.0306	.4567	.3091
426185	15.7688	16.1950	16.6212	17.0474	17.4736	17.8998	18.3260	18.7521	19.1783	19.6045	20.0307	20.4569	21.3093
188	.7690	.1951	.6213	.0475	.4737	.8999	.3261	.7523	.1785	.6046	.0308	.4570	.3094
191	.7691	.1953	.6214	.0476	.4738	.9000	.3262	.7524	.1786	.6048	.0310	.4572	.3096
194	.7692	.1954	.6216	.0478	.4740	.9001	.3263	.7525	.1787	.6049	.0311	.4573	.3097
197	.7693	.1955	.6217	.0479	.4741	.9003	.3265	.7527	.1789	.6051	.0313	.4575	.3099
426200	15.7694	16.1956	16.6218	17.0480	17.4742	17.9004	18.3266	18.7528	19.1790	19.6052	20.0314	20.4576	21.3100

R

MEGACYCLES PER SECOND

HARMONICS

BASIC FREQ.	24	25	26	27	28	29	30	31	32	33	34	35	36
426200	10.2288	10.6550	11.0812	11.5074	11.9336	12.3598	12.7860	13.2122	13.6384	14.0646	14.4908	14.9170	15.3432
203	.2289	.6551	.0813	.5075	.9337	.3599	.7861	.2123	.6385	.0647	.4909	.9171	.3433
206	.2289	.6552	.0814	.5076	.9338	.3600	.7862	.2124	.6386	.0648	.4910	.9172	.3434
209	.2290	.6552	.0814	.5076	.9339	.3601	.7863	.2125	.6387	.0649	.4911	.9173	.3435
212	.2291	.6553	.0815	.5077	.9339	.3601	.7864	.2126	.6388	.0650	.4912	.9174	.3436
426215	10.2292	10.6554	11.0816	11.5078	11.9340	12.3602	12.7865	13.2127	13.6389	14.0651	14.4913	14.9175	15.3437
218	.2292	.6555	.0817	.5079	.9341	.3603	.7865	.2128	.6390	.0652	.4914	.9176	.3438
221	.2293	.6555	.0817	.5080	.9342	.3604	.7866	.2129	.6391	.0653	.4915	.9177	.3440
224	.2294	.6556	.0818	.5080	.9343	.3605	.7867	.2129	.6392	.0654	.4916	.9178	.3441
227	.2294	.6557	.0819	.5081	.9344	.3606	.7868	.2130	.6393	.0655	.4917	.9179	.3442
426230	10.2295	10.6558	11.0820	11.5082	11.9344	12.3607	12.7869	13.2131	13.6394	14.0656	14.4918	14.9181	15.3443
233	.2296	.6558	.0821	.5083	.9345	.3608	.7870	.2132	.6395	.0657	.4919	.9182	.3444
236	.2297	.6559	.0821	.5084	.9346	.3608	.7871	.2133	.6396	.0658	.4920	.9183	.3445
239	.2297	.6560	.0822	.5085	.9347	.3609	.7872	.2134	.6396	.0659	.4921	.9184	.3446
242	.2298	.6561	.0823	.5085	.9348	.3610	.7873	.2135	.6397	.0660	.4922	.9185	.3447
426245	10.2299	10.6561	11.0824	11.5086	11.9349	12.3611	12.7874	13.2136	13.6398	14.0661	14.4923	14.9186	15.3448
248	.2300	.6562	.0824	.5087	.9349	.3612	.7874	.2137	.6399	.0662	.4924	.9187	.3449
251	.2300	.6563	.0825	.5088	.9350	.3613	.7875	.2138	.6400	.0663	.4925	.9188	.3450
254	.2301	.6564	.0826	.5089	.9351	.3614	.7876	.2139	.6401	.0664	.4926	.9189	.3451
257	.2302	.6564	.0827	.5089	.9352	.3615	.7877	.2140	.6402	.0665	.4927	.9190	.3453
426260	10.2302	10.6565	11.0828	11.5090	11.9353	12.3615	12.7878	13.2141	13.6403	14.0666	14.4928	14.9191	15.3454
263	.2303	.6566	.0828	.5091	.9354	.3616	.7879	.2142	.6404	.0667	.4929	.9192	.3455
266	.2304	.6567	.0829	.5092	.9354	.3617	.7880	.2142	.6405	.0668	.4930	.9193	.3456
269	.2305	.6567	.0830	.5093	.9355	.3618	.7881	.2143	.6406	.0669	.4931	.9194	.3457
272	.2305	.6568	.0831	.5093	.9356	.3619	.7882	.2144	.6407	.0670	.4932	.9195	.3458
426275	10.2306	10.6569	11.0832	11.5094	11.9357	12.3620	12.7883	13.2145	13.6408	14.0671	14.4934	14.9196	15.3459
278	.2307	.6570	.0832	.5095	.9358	.3621	.7883	.2146	.6409	.0672	.4935	.9197	.3460
281	.2307	.6570	.0833	.5096	.9359	.3621	.7884	.2147	.6410	.0673	.4936	.9198	.3461
284	.2308	.6571	.0834	.5097	.9360	.3622	.7885	.2148	.6411	.0674	.4937	.9199	.3462
287	.2309	.6572	.0835	.5097	.9360	.3623	.7886	.2149	.6412	.0675	.4938	.9200	.3463
426290	10.2310	10.6573	11.0835	11.5098	11.9361	12.3624	12.7887	13.2150	13.6413	14.0676	14.4939	14.9202	15.3464
293	.2310	.6573	.0836	.5099	.9362	.3625	.7888	.2151	.6414	.0677	.4940	.9203	.3465
296	.2311	.6574	.0837	.5100	.9363	.3626	.7889	.2152	.6415	.0678	.4941	.9204	.3467
299	.2312	.6575	.0838	.5101	.9364	.3627	.7890	.2153	.6416	.0679	.4942	.9205	.3468
302	.2312	.6576	.0839	.5102	.9365	.3628	.7891	.2154	.6417	.0680	.4943	.9206	.3469
426305	10.2313	10.6576	11.0839	11.5102	11.9365	12.3628	12.7892	13.2155	13.6418	14.0681	14.4944	14.9207	15.3470
308	.2314	.6577	.0840	.5103	.9366	.3629	.7892	.2155	.6419	.0682	.4945	.9208	.3471
311	.2315	.6578	.0841	.5104	.9367	.3630	.7893	.2156	.6420	.0683	.4946	.9209	.3472
314	.2315	.6579	.0842	.5105	.9368	.3631	.7894	.2157	.6420	.0684	.4947	.9210	.3473
317	.2316	.6579	.0842	.5106	.9369	.3632	.7895	.2158	.6421	.0685	.4948	.9211	.3474
426320	10.2317	10.6580	11.0843	11.5106	11.9370	12.3633	12.7896	13.2159	13.6422	14.0686	14.4949	14.9212	15.3475
323	.2318	.6581	.0844	.5107	.9370	.3634	.7897	.2160	.6423	.0687	.4950	.9213	.3476
326	.2318	.6582	.0845	.5108	.9371	.3635	.7898	.2161	.6424	.0688	.4951	.9214	.3477
329	.2319	.6582	.0846	.5109	.9372	.3635	.7899	.2162	.6425	.0689	.4952	.9215	.3478
332	.2320	.6583	.0846	.5110	.9373	.3636	.7900	.2163	.6426	.0690	.4953	.9216	.3480
426335	10.2320	10.6584	11.0847	11.5110	11.9374	12.3637	12.7901	13.2164	13.6427	14.0691	14.4954	14.9217	15.3481
338	.2321	.6585	.0848	.5111	.9375	.3638	.7901	.2165	.6428	.0692	.4955	.9218	.3482
341	.2322	.6585	.0849	.5112	.9375	.3639	.7902	.2166	.6429	.0693	.4956	.9219	.3483
344	.2323	.6586	.0849	.5113	.9376	.3640	.7903	.2167	.6430	.0694	.4957	.9220	.3484
347	.2323	.6587	.0850	.5114	.9377	.3641	.7904	.2168	.6431	.0695	.4958	.9221	.3485
426350	10.2324	10.6588	11.0851	11.5115	11.9378	12.3642	12.7905	13.2169	13.6432	14.0696	14.4959	14.9223	15.3486
353	.2325	.6588	.0852	.5115	.9379	.3642	.7906	.2169	.6433	.0696	.4960	.9224	.3487
356	.2325	.6589	.0853	.5116	.9380	.3643	.7907	.2170	.6434	.0697	.4961	.9225	.3488
359	.2326	.6590	.0853	.5117	.9381	.3644	.7908	.2171	.6435	.0698	.4962	.9226	.3489
362	.2327	.6591	.0854	.5118	.9381	.3645	.7909	.2172	.6436	.0699	.4963	.9227	.3490
426365	10.2328	10.6591	11.0855	11.5119	11.9382	12.3646	12.7910	13.2173	13.6437	14.0700	14.4964	14.9228	15.3491
368	.2328	.6592	.0856	.5119	.9383	.3647	.7910	.2174	.6438	.0701	.4965	.9229	.3492
371	.2329	.6593	.0856	.5120	.9384	.3648	.7911	.2175	.6439	.0702	.4966	.9230	.3494
374	.2330	.6594	.0857	.5121	.9385	.3648	.7912	.2176	.6440	.0703	.4967	.9231	.3495
377	.2330	.6594	.0858	.5122	.9386	.3649	.7913	.2177	.6441	.0704	.4968	.9232	.3496
426380	10.2331	10.6595	11.0859	11.5123	11.9386	12.3650	12.7914	13.2178	13.6442	14.0705	14.4969	14.9233	15.3497
383	.2332	.6596	.0860	.5123	.9387	.3651	.7915	.2179	.6443	.0706	.4970	.9234	.3498
386	.2333	.6597	.0860	.5124	.9388	.3652	.7916	.2180	.6444	.0707	.4971	.9235	.3499
389	.2333	.6597	.0861	.5125	.9389	.3653	.7917	.2181	.6444	.0708	.4972	.9236	.3500
392	.2334	.6598	.0862	.5126	.9390	.3654	.7918	.2182	.6445	.0709	.4973	.9237	.3501
426395	10.2335	10.6599	11.0863	11.5127	11.9391	12.3655	12.7919	13.2182	13.6446	14.0710	14.4974	14.9238	15.3502
398	.2336	.6600	.0863	.5127	.9391	.3655	.7919	.2183	.6447	.0711	.4975	.9239	.3503
401	.2336	.6600	.0864	.5128	.9392	.3656	.7920	.2184	.6448	.0712	.4976	.9240	.3504
404	.2337	.6601	.0865	.5129	.9393	.3657	.7921	.2185	.6449	.0713	.4977	.9241	.3505
407	.2338	.6602	.0866	.5130	.9394	.3658	.7922	.2186	.6450	.0714	.4978	.9242	.3507
426410	10.2338	10.6603	11.0867	11.5131	11.9395	12.3659	12.7923	13.2187	13.6451	14.0715	14.4979	14.9244	15.3508
413	.2339	.6603	.0867	.5132	.9396	.3660	.7924	.2188	.6452	.0716	.4980	.9245	.3509
416	.2340	.6604	.0868	.5132	.9396	.3661	.7925	.2189	.6453	.0717	.4981	.9246	.3510
419	.2341	.6605	.0869	.5133	.9397	.3662	.7926	.2190	.6454	.0718	.4982	.9247	.3511
422	.2341	.6606	.0870	.5134	.9398	.3662	.7927	.2191	.6455	.0719	.4983	.9248	.3512
426425	10.2342	10.6606	11.0871	11.5135	11.9399	12.3663	12.7928	13.2192	13.6456	14.0720	14.4985	14.9249	15.3513
428	.2343	.6607	.0871	.5136	.9400	.3664	.7928	.2193	.6457	.0721	.4986	.9250	.3514
431	.2343	.6608	.0872	.5136	.9401	.3665	.7929	.2194	.6458	.0722	.4987	.9251	.3515
434	.2344	.6609	.0873	.5137	.9402	.3666	.7930	.2195	.6459	.0723	.4988	.9252	.3516
437	.2345	.6609	.0874	.5138	.9402	.3667	.7931	.2195	.6460	.0724	.4989	.9253	.3517
426440	10.2346	10.6610	11.0874	11.5139	11.9403	12.3668	12.7932	13.2196	13.6461	14.0725	14.4990	14.9254	15.3518
443	.2346	.6611	.0875	.5140	.9404	.3668	.7933	.2197	.6462	.0726	.4991	.9255	.3519
446	.2347	.6612	.0876	.5140	.9405	.3669	.7934	.2198	.6463	.0727	.4992	.9256	.3521
449	.2348	.6612	.0877	.5141	.9406	.3670	.7935	.2199	.6464	.0728	.4993	.9257	.3522
452	.2348	.6613	.0878	.5142	.9407	.3671	.7936	.2200	.6465	.0729	.4994	.9258	.3523
426455	10.2349	10.6614	11.0878	11.5143	11.9407	12.3672	12.7937	13.2201	13.6466	14.0730	14.4995	14.9259	15.3524
458	.2350	.6615	.0879	.5144	.9408	.3673	.7937	.2202	.6467	.0731	.4996	.9260	.3525
461	.2351	.6615	.0880	.5144	.9409	.3674	.7938	.2203	.6468	.0732	.4997	.9261	.3526
464	.2351	.6616	.0881	.5145	.9410	.3675	.7939	.2204	.6468	.0733	.4998	.9262	.3527
467	.2352	.6617	.0881	.5146	.9411	.3675	.7940	.2205	.6469	.0734	.4999	.9263	.3528
426470	10.2353	10.6618	11.0882	11.5147	11.9412	12.3676	12.7941	13.2206	13.6470	14.0735	14.5000	14.9265	15.3529
473	.2354	.6618	.0883	.5148	.9412	.3677	.7942	.2207	.6471	.0736	.5001	.9266	.3530
476	.2354	.6619	.0884	.5149	.9413	.3678	.7943	.2208	.6472	.0737	.5002	.9267	.3531
479	.2355	.6620	.0885	.5149	.9414	.3679	.7944	.2208	.6473	.0738	.5003	.9268	.3532
482	.2356	.6621	.0885	.5150	.9415	.3680	.7945	.2209	.6474	.0739	.5004	.9269	.3534
426485	10.2356	10.6621	11.0886	11.5151	11.9416	12.3681	12.7946	13.2210	13.6475	14.0740	14.5005	14.9270	15.3535
488	.2357	.6622	.0887	.5152	.9417	.3682	.7946	.2211	.6476	.0741	.5006	.9271	.3536
491	.2358	.6623	.0888	.5153	.9417	.3682	.7947	.2212	.6477	.0742	.5007	.9272	.3537
494	.2359	.6624	.0888	.5153	.9418	.3683	.7948	.2213	.6478	.0743	.5008	.9273	.3538
497	.2359	.6624	.0889	.5154	.9419	.3684	.7949	.2214	.6479	.0744	.5009	.9274	.3539
426500	10.2360	10.6625	11.0890	11.5155	11.9420	12.3685	12.7950	13.2215	13.6480	14.0745	14.5010	14.9275	15.3540

MEGACYCLES PER SECOND

HARMONICS

BASIC FREQ.	37	38	39	40	41	42	43	44	45	46	47	48	50
426200	15.7694	16.1956	16.6218	17.0480	17.4742	17.9004	18.3266	18.7528	19.1790	19.6052	20.0314	20.4576	21.3100
203	.7695	.1957	.6219	.0481	.4743	.9005	.3267	.7529	.1791	.6053	.0315	.4577	.3102
206	.7696	.1958	.6220	.0482	.4744	.9007	.3269	.7531	.1793	.6055	.0317	.4579	.3103
209	.7697	.1959	.6222	.0484	.4746	.9008	.3270	.7532	.1794	.6056	.0318	.4580	.3105
212	.7698	.1961	.6223	.0485	.4747	.9009	.3271	.7533	.1795	.6058	.0320	.4582	.3106
426215	15.7700	16.1962	16.6224	17.0486	17.4748	17.9010	18.3272	18.7535	19.1797	19.6059	20.0321	20.4583	21.3108
218	.7701	.1963	.6225	.0487	.4749	.9012	.3274	.7536	.1798	.6060	.0322	.4585	.3109
221	.7702	.1964	.6226	.0488	.4751	.9013	.3275	.7537	.1799	.6062	.0324	.4586	.3111
224	.7703	.1965	.6227	.0490	.4752	.9014	.3276	.7539	.1801	.6063	.0325	.4588	.3112
227	.7704	.1966	.6229	.0491	.4753	.9015	.3278	.7540	.1802	.6064	.0327	.4589	3114
426230	15.7705	16.1967	16.6230	17.0492	17.4754	17.9017	18.3279	18.7541	19.1804	19.6066	20.0328	20.4590	21.3115
233	.7706	.1969	.6231	.0493	.4756	.9018	.3280	.7543	.1805	.6067	.0330	.4592	.3117
236	.7707	.1970	.6232	.0494	.4757	.9019	.3281	.7544	.1806	.6069	.0331	.4593	.3118
239	.7708	.1971	.6233	.0496	.4758	.9020	.3283	.7545	.1808	.6070	.0332	.4595	.3120
242	.7710	.1972	.6234	.0497	.4759	.9022	.3284	.7546	.1809	.6071	.0334	.4596	.3121
426245	15.7711	16.1973	16.6236	17.0498	17.4760	17.9023	18.3285	18.7548	19.1810	19.6073	20.0335	20.4598	21.3123
248	.7712	.1974	.6237	.0499	.4762	.9024	.3287	.7549	.1812	.6074	.0337	.4599	.3124
251	.7713	.1975	.6238	.0500	.4763	.9025	.3288	.7550	.1813	.6075	.0338	.4600	.3126
254	.7714	.1977	.6239	.0502	.4764	.9027	.3289	.7552	.1814	.6077	.0339	.4602	.3127
257	.7715	.1978	.6240	.0503	.4765	.9028	.3291	.7553	.1816	.6078	.0341	.4603	.3129
426260	15.7716	16.1979	16.6241	17.0504	17.4767	17.9029	18.3292	18.7554	19.1817	19.6080	20.0342	20.4605	21.3130
263	.7717	.1980	.6243	.0505	.4768	.9030	.3293	.7556	.1818	.6081	.0344	.4606	.3132
266	.7718	.1981	.6244	.0506	.4769	.9032	.3294	.7557	.1820	.6082	.0345	.4608	.3133
269	.7720	.1982	.6245	.0508	.4770	.9033	.3296	.7558	.1821	.6084	.0346	.4609	.3135
272	.7721	.1983	.6246	.0509	.4772	.9034	.3297	.7560	.1822	.6085	.0348	.4611	.3136
426275	15.7722	16.1985	16.6247	17.0510	17.4773	17.9036	18.3298	18.7561	19.1824	19.6087	20.0349	20.4612	21.3138
278	.7723	.1986	.6248	.0511	.4774	.9037	.3300	.7562	.1825	.6088	.0351	.4613	.3139
281	.7724	.1987	.6250	.0512	.4775	.9038	.3301	.7564	.1826	.6089	.0352	.4615	.3141
284	.7725	.1988	.6251	.0514	.4776	.9039	.3302	.7565	.1828	.6091	.0353	.4616	.3142
287	.7726	.1989	.6252	.0515	.4778	.9041	.3303	.7566	.1829	.6092	.0355	.4618	.3144
426290	15.7727	16.1990	16.6253	17.0516	17.4779	17.9042	18.3305	18.7568	19.1831	19.6093	20.0356	20.4619	21.3145
293	.7728	.1991	.6254	.0517	.4780	.9043	.3306	.7569	.1832	.6095	.0358	.4621	.3147
296	.7730	.1992	.6255	.0518	.4781	.9044	.3307	.7570	.1833	.6096	.0359	.4622	.3148
299	.7731	.1994	.6257	.0520	.4783	.9046	.3309	.7572	.1835	.6098	.0361	.4624	.3150
302	.7732	.1995	.6258	.0521	.4784	.9047	.3310	.7573	.1836	.6099	.0362	.4625	.3151
426305	15.7733	16.1996	16.6259	17.0522	17.4785	17.9048	18.3311	18.7574	19.1837	19.6100	20.0363	20.4626	21.3153
308	.7734	.1997	.6260	.0523	.4786	.9049	.3312	.7576	.1839	.6102	.0365	.4628	.3154
311	.7735	.1998	.6261	.0524	.4788	.9051	.3314	.7577	.1840	.6103	.0366	.4629	.3156
314	.7736	.1999	.6262	.0526	.4789	.9052	.3315	.7578	.1841	.6104	.0368	.4631	.3157
317	.7737	.2000	.6264	.0527	.4790	.9053	.3316	.7579	.1843	.6106	.0369	.4632	.3159
426320	15.7738	16.2002	16.6265	17.0528	17.4791	17.9054	18.3318	18.7581	19.1844	19.6107	20.0370	20.4634	21.3160
323	.7740	.2003	.6266	.0529	.4792	.9056	.3319	.7582	.1845	.6109	.0372	.4635	.3162
326	.7741	.2004	.6267	.0530	.4794	.9057	.3320	.7583	.1847	.6110	.0373	.4636	.3163
329	.7742	.2005	.6268	.0532	.4795	.9058	.3321	.7585	.1848	.6111	.0375	.4638	.3165
332	.7743	.2006	.6269	.0533	.4796	.9059	.3323	.7586	.1849	.6113	.0376	.4639	.3166
426335	15.7744	16.2007	16.6271	17.0534	17.4797	17.9061	18.3324	18.7587	19.1851	19.6114	20.0377	20.4641	21.3168
338	.7745	.2008	.6272	.0535	.4799	.9062	.3325	.7589	.1852	.6115	.0379	.4642	.3169
341	.7746	.2010	.6273	.0536	.4800	.9063	.3327	.7590	.1853	.6117	.0380	.4644	.3171
344	.7747	.2011	.6274	.0538	.4801	.9064	.3328	.7591	.1855	.6118	.0382	.4645	.3172
347	.7748	.2012	.6275	.0539	.4802	.9066	.3329	.7593	.1856	.6120	.0383	.4647	.3174
426350	15.7750	16.2013	16.6277	17.0540	17.4804	17.9067	18.3331	18.7594	19.1858	19.6121	20.0385	20.4648	21.3175
353	.7751	.2014	.6278	.0541	.4805	.9068	.3332	.7595	.1859	.6122	.0386	.4649	.3177
356	.7752	.2015	.6279	.0542	.4806	.9070	.3333	.7597	.1860	.6124	.0387	.4651	.3178
359	.7753	.2016	.6280	.0544	.4807	.9071	.3334	.7598	.1862	.6125	.0389	.4652	.3180
362	.7754	.2018	.6281	.0545	.4808	.9072	.3336	.7599	.1863	.6127	.0390	.4654	.3181
426365	15.7755	16.2019	16.6282	17.0546	17.4810	17.9073	18.3337	18.7601	19.1864	19.6128	20.0392	20.4655	21.3183
368	.7756	.2020	.6284	.0547	.4811	.9075	.3338	.7602	.1866	.6129	.0393	.4657	.3184
371	.7757	.2021	.6285	.0548	.4812	.9076	.3340	.7603	.1867	.6131	.0394	.4658	.3186
374	.7758	.2022	.6286	.0550	.4813	.9077	.3341	.7605	.1868	.6132	.0396	.4660	.3187
377	.7759	.2023	.6287	.0551	.4815	.9078	.3342	.7606	.1870	.6133	.0397	.4661	.3189
426380	15.7761	16.2024	16.6288	17.0552	17.4816	17.9080	18.3343	18.7607	19.1871	19.6135	20.0399	20.4662	21.3190
383	.7762	.2026	.6289	.0553	.4817	.9081	.3345	.7609	.1872	.6136	.0400	.4664	.3192
386	.7763	.2027	.6291	.0554	.4818	.9082	.3346	.7610	.1874	.6138	.0401	.4665	.3193
389	.7764	.2028	.6292	.0556	.4819	.9083	.3347	.7611	.1875	.6139	.0403	.4667	.3195
392	.7765	.2029	.6293	.0557	.4821	.9085	.3349	.7612	.1876	.6140	.0404	.4668	.3196
426395	15.7766	16.2030	16.6294	17.0558	17.4822	17.9086	18.3350	18.7614	19.1878	19.6142	20.0406	20.4670	21.3198
398	.7767	.2031	.6295	.0559	.4823	.9087	.3351	.7615	.1879	.6143	.0407	.4671	.3199
401	.7768	.2032	.6296	.0560	.4824	.9088	.3352	.7616	.1880	.6144	.0408	.4672	.3201
404	.7769	.2034	.6298	.0562	.4826	.9090	.3354	.7618	.1882	.6146	.0410	.4674	.3202
407	.7771	.2035	.6299	.0563	.4827	.9091	.3355	.7619	.1883	.6147	.0411	.4675	.3204
426410	15.7772	16.2036	16.6300	17.0564	17.4828	17.9092	18.3356	18.7620	19.1885	19.6149	20.0413	20.4677	21.3205
413	.7773	.2037	.6301	.0565	.4829	.9093	.3358	.7622	.1886	.6150	.0414	.4678	.3207
416	.7774	.2038	.6302	.0566	.4831	.9095	.3359	.7623	.1887	.6151	.0416	.4680	3208
419	.7775	.2039	.6303	.0568	.4832	.9096	.3360	.7624	.1889	.6153	.0417	.4681	.3210
422	.7776	.2040	.6305	.0569	.4833	.9097	.3361	.7626	.1890	.6154	.0418	.4683	.3211
426425	15.7777	16.2042	16.6306	17.0570	17.4834	17.9099	18.3363	18.7627	19.1891	19.6156	20.0420	20.4684	21.3213
428	.7778	.2043	.6307	.0571	.4835	.9100	.3364	.7628	.1893	.6157	.0421	.4685	.3214
431	.7779	.2044	.6308	.0572	.4837	.9101	.3365	.7630	.1894	.6158	.0423	.4687	.3216
434	.7781	.2045	.6309	.0574	.4838	.9102	.3367	.7631	.1895	.6160	.0424	.4688	.3217
437	.7782	.2046	.6310	.0575	.4839	.9104	.3368	.7632	.1897	.6161	.0425	.4690	.3219
426440	15.7783	16.2047	16.6312	17.0576	17.4840	17.9105	18.3369	18.7634	19.1898	19.6162	20.0427	20.4691	21.3220
443	.7784	.2048	.6313	.0577	.4842	.9106	.3370	.7635	.1899	.6164	.0428	.4693	.3222
446	.7785	.2049	.6314	.0578	.4843	.9107	.3372	.7636	.1901	.6165	.0430	.4694	.3223
449	.7786	.2051	.6315	.0580	.4844	.9109	.3373	.7638	.1902	.6167	.0431	.4696	.3225
452	.7787	.2052	.6316	.0581	.4845	.9110	.3374	.7639	.1903	.6168	.0432	.4697	.3226
426455	15.7788	16.2053	16.6317	17.0582	17.4847	17.9111	18.3376	18.7640	19.1905	19.6169	20.0434	20.4698	21.3228
458	.7789	.2054	.6319	.0583	.4848	.9112	.3377	.7642	.1906	.6171	.0435	.4700	.3229
461	.7791	.2055	.6320	.0584	.4849	.9114	.3378	.7643	.1907	.6172	.0437	.4701	.3231
464	.7792	.2056	.6321	.0586	.4850	.9115	.3380	.7644	.1909	.6173	.0438	.4703	.3232
467	.7793	.2057	.6322	.0587	.4851	.9116	.3381	.7645	.1910	.6175	.0439	.4704	.3234
426470	15.7794	16.2059	16.6323	17.0588	17.4853	17.9117	18.3382	18.7647	19.1912	19.6176	20.0441	20.4706	21.3235
473	.7795	.2060	.6324	.0589	.4854	.9119	.3383	.7648	.1913	.6178	.0442	.4707	.3237
476	.7796	.2061	.6326	.0590	.4855	.9120	.3385	.7649	.1914	.6179	.0444	.4708	.3238
479	.7797	.2062	.6327	.0592	.4856	.9121	.3386	.7651	.1916	.6180	.0445	.4710	.3240
482	.7798	.2063	.6328	.0593	.4858	.9122	.3387	.7652	.1917	.6182	.0447	.4711	.3241
426485	15.7799	16.2064	16.6329	17.0594	17.4859	17.9124	18.3389	18.7653	19.1918	19.6183	20.0448	20.4713	21.3243
488	.7801	.2065	.6330	.0595	.4860	.9125	.3390	.7655	.1920	.6184	.0449	.4714	.3244
491	.7802	.2067	.6331	.0596	.4861	.9126	.3391	.7656	.1921	.6186	.0451	.4716	.3246
494	.7803	.2068	.6333	.0598	.4863	.9127	.3392	.7657	.1922	.6187	.0452	.4717	.3247
497	.7804	.2069	.6334	.0599	.4864	.9129	.3394	.7659	.1924	.6189	.0454	.4719	.3249
426500	15.7805	16.2070	16.6335	17.0600	17.4865	17.9130	18.3395	18.7660	19.1925	19.6190	20.0455	20.4720	21.3250

MEGACYCLES PER SECOND

H A R M O N I C S

BASIC FREQ.	24	25	26	27	28	29	30	31	32	33	34	35	36
426500	10.2360	10.6625	11.0890	11.5155	11.9420	12.3685	12.7950	13.2215	13.6480	14.0745	14.5010	14.9275	15.3540
503	.2361	.6626	.0891	.5156	.9421	.3686	.7951	.2216	.6481	.0746	.5011	.9276	.3541
506	.2361	.6627	.0892	.5157	.9422	.3687	.7952	.2217	.6482	.0747	.5012	.9277	.3542
509	.2362	.6627	.0892	.5157	.9423	.3688	.7953	.2218	.6483	.0748	.5013	.9278	.3543
512	.2363	.6628	.0893	.5158	.9423	.3688	.7954	.2219	.6484	.0749	.5014	.9279	.3544
426515	10.2364	10.6629	11.0894	11.5159	11.9424	12.3689	12.7955	13.2220	13.6485	14.0750	14.5015	14.9280	15.3545
518	.2364	.6630	.0895	.5160	.9425	.3690	.7955	.2221	.6486	.0751	.5016	.9281	.3546
521	.2365	.6630	.0895	.5161	.9426	.3691	.7956	.2222	.6487	.0752	.5017	.9282	.3548
524	.2366	.6631	.0896	.5161	.9427	.3692	.7957	.2222	.6488	.0753	.5018	.9283	.3549
527	.2366	.6632	.0897	.5162	.9428	.3693	.7958	.2223	.6489	.0754	.5019	.9284	.3550
426530	10.2367	10.6633	11.0898	11.5163	11.9428	12.3694	12.7959	13.2224	13.6490	14.0755	14.5020	14.9286	15.3551
533	.2368	.6633	.0899	.5164	.9429	.3695	.7960	.2225	.6491	.0756	.5021	.9287	.3552
536	.2369	.6634	.0899	.5165	.9430	.3695	.7961	.2226	.6492	.0757	.5022	.9288	.3553
539	.2369	.6635	.0900	.5166	.9431	.3696	.7962	.2227	.6492	.0758	.5023	.9289	.3554
542	.2370	.6636	.0901	.5166	.9432	.3697	.7963	.2228	.6493	.0759	.5024	.9290	.3555
426545	10.2371	10.6636	11.0902	11.5167	11.9433	12.3698	12.7964	13.2229	13.6494	14.0760	14.5025	14.9291	15.3556
548	.2372	.6637	.0902	.5168	.9433	.3699	.7964	.2230	.6495	.0761	.5026	.9292	.3557
551	.2372	.6638	.0903	.5169	.9434	.3700	.7965	.2231	.6496	.0762	.5027	.9293	.3558
554	.2373	.6639	.0904	.5170	.9435	.3701	.7966	.2232	.6497	.0763	.5028	.9294	.3559
557	.2374	.6639	.0905	.5170	.9436	.3702	.7967	.2233	.6498	.0764	.5029	.9295	.3561
426560	10.2374	10.6640	11.0906	11.5171	11.9437	12.3702	12.7968	13.2234	13.6499	14.0765	14.5030	14.9296	15.3562
563	.2375	.6641	.0906	.5172	.9438	.3703	.7969	.2235	.6500	.0766	.5031	.9297	.3563
566	.2376	.6642	.0907	.5173	.9438	.3704	.7970	.2235	.6501	.0767	.5032	.9298	.3564
569	.2377	.6642	.0908	.5174	.9439	.3705	.7971	.2236	.6502	.0768	.5033	.9299	.3565
572	.2377	.6643	.0909	.5174	.9440	.3706	.7972	.2237	.6503	.0769	.5034	.9300	.3566
426575	10.2378	10.6644	11.0910	11.5175	11.9441	12.3707	12.7973	13.2238	13.6504	14.0770	14.5036	14.9301	15.3567
578	.2379	.6645	.0910	.5176	.9442	.3708	.7973	.2239	.6505	.0771	.5037	.9302	.3568
581	.2379	.6645	.0911	.5177	.9443	.3708	.7974	.2240	.6506	.0772	.5038	.9303	.3569
584	.2380	.6646	.0912	.5178	.9444	.3709	.7975	.2241	.6507	.0773	.5039	.9304	.3570
587	.2381	.6647	.0913	.5178	.9444	.3710	.7976	.2242	.6508	.0774	.5040	.9305	.3571
426590	10.2382	10.6648	11.0913	11.5179	11.9445	12.3711	12.7977	13.2243	13.6509	14.0775	14.5041	14.9307	15.3572
593	.2382	.6648	.0914	.5180	.9446	.3712	.7978	.2244	.6510	.0776	.5042	.9308	.3573
596	.2383	.6649	.0915	.5181	.9447	.3713	.7979	.2245	.6511	.0777	.5043	.9309	.3575
599	.2384	.6650	.0916	.5182	.9448	.3714	.7980	.2246	.6512	.0778	.5044	.9310	.3576
602	.2384	.6651	.0917	.5183	.9449	.3715	.7981	.2247	.6513	.0779	.5045	.9311	.3577
426605	10.2385	11.6651	11.0917	11.5183	11.9449	12.3715	12.7982	13.2248	13.6514	14.0780	14.5046	14.9312	15.3578
608	.2386	.6652	.0918	.5184	.9450	.3716	.7982	.2248	.6515	.0781	.5047	.9313	.3579
611	.2387	.6653	.0919	.5185	.9451	.3717	.7983	.2249	.6516	.0782	.5048	.9314	.3580
614	.2387	.6654	.0920	.5186	.9452	.3718	.7984	.2250	.6516	.0783	.5049	.9315	.3581
617	.2388	.6654	.0920	.5187	.9453	.3719	.7985	.2251	.6517	.0784	.5050	.9316	.3582
426620	10.2389	10.6655	11.0921	11.5187	11.9454	12.3720	12.7986	13.2252	13.6518	14.0785	14.5051	14.9317	15.3583
623	.2390	.6656	.0922	.5188	.9454	.3721	.7987	.2253	.6519	.0786	.5052	.9318	.3584
626	.2390	.6657	.0923	.5189	.9455	.3722	.7988	.2254	.6520	.0787	.5053	.9319	.3585
629	.2391	.6657	.0924	.5190	.9456	.3722	.7989	.2255	.6521	.0788	.5054	.9320	.3586
632	.2392	.6658	.0924	.5191	.9457	.3723	.7990	.2256	.6522	.0789	.5055	.9321	.3588
426635	10.2392	10.6659	11.0925	11.5191	11.9458	12.3724	12.7991	13.2257	13.6523	14.0790	14.5056	14.9322	15.3589
638	.2393	.6660	.0926	.5192	.9459	.3725	.7991	.2258	.6524	.0791	.5057	.9323	.3590
641	.2394	.6660	.0927	.5193	.9459	.3726	.7992	.2259	.6525	.0792	.5058	.9324	.3591
644	.2395	.6661	.0927	.5194	.9460	.3727	.7993	.2260	.6526	.0793	.5059	.9325	.3592
647	.2395	.6662	.0928	.5195	.9461	.3728	.7994	.2261	.6527	.0794	.5060	.9326	.3593
426650	10.2396	10.6663	11.0929	11.5196	11.9462	12.3729	12.7995	13.2262	13.6528	14.0795	14.5061	14.9328	15.3594
653	.2397	.6663	.0930	.5196	.9463	.3729	.7996	.2262	.6529	.0795	.5062	.9329	.3595
656	.2397	.6664	.0931	.5197	.9464	.3730	.7997	.2263	.6530	.0796	.5063	.9330	.3596
659	.2398	.6665	.0931	.5198	.9465	.3731	.7998	.2264	.6531	.0797	.5064	.9331	.3597
662	.2399	.6666	.0932	.5199	.9465	.3732	.7999	.2265	.6532	.0798	.5065	.9332	.3598
426665	10.2400	10.6666	11.0933	11.5200	11.9466	12.3733	12.8000	13.2266	13.6533	14.0799	14.5066	14.9333	15.3599
668	.2400	.6667	.0934	.5200	.9467	.3734	.8000	.2267	.6534	.0800	.5067	.9334	.3600
671	.2401	.6668	.0934	.5201	.9468	.3735	.8001	.2268	.6535	.0801	.5068	.9335	.3602
674	.2402	.6669	.0935	.5202	.9469	.3735	.8002	.2269	.6536	.0802	.5069	.9336	.3603
677	.2402	.6669	.0936	.5203	.9470	.3736	.8003	.2270	.6537	.0803	.5070	.9337	.3604
426680	10.2403	10.6670	11.0937	11.5204	11.9470	12.3737	12.8004	13.2271	13.6538	14.0804	14.5071	14.9338	15.3605
683	.2404	.6671	.0938	.5204	.9471	.3738	.8005	.2272	.6539	.0805	.5072	.9339	.3606
686	.2405	.6672	.0938	.5205	.9472	.3739	.8006	.2273	.6540	.0806	.5073	.9340	.3607
689	.2405	.6672	.0939	.5206	.9473	.3740	.8007	.2274	.6540	.0807	.5074	.9341	.3608
692	.2406	.6673	.0940	.5207	.9474	.3741	.8008	.2275	.6541	.0808	.5075	.9342	.3609
426695	10.2407	10.6674	11.0941	11.5208	11.9475	12.3742	12.8009	13.2275	13.6542	14.0809	14.5076	14.9343	15.3610
698	.2408	.6675	.0941	.5208	.9475	.3742	.8009	.2276	.6543	.0810	.5077	.9344	.3611
701	.2408	.6675	.0942	.5209	.9476	.3743	.8010	.2277	.6544	.0811	.5078	.9345	.3612
704	.2409	.6676	.0943	.5210	.9477	.3744	.8011	.2278	.6545	.0812	.5079	.9346	.3613
707	.2410	.6677	.0944	.5211	.9478	.3745	.8012	.2279	.6546	.0813	.5080	.9347	.3615
426710	10.2410	10.6678	11.0945	11.5212	11.9479	12.3746	12.8013	13.2280	13.6547	14.0814	14.5081	14.9349	15.3616
713	.2411	.6678	.0945	.5213	.9480	.3747	.8014	.2281	.6548	.0815	.5082	.9350	.3617
716	.2412	.6679	.0946	.5213	.9480	.3748	.8015	.2282	.6549	.0816	.5083	.9351	.3618
719	.2413	.6680	.0947	.5214	.9481	.3749	.8016	.2283	.6550	.0817	.5084	.9352	.3619
722	.2413	.6681	.0948	.5215	.9482	.3749	.8017	.2284	.6551	.0818	.5085	.9353	.3620
426725	10.2414	10.6681	11.0949	11.5216	11.9483	12.3750	12.8018	13.2285	13.6552	14.0819	14.5087	14.9354	15.3621
728	.2415	.6682	.0949	.5217	.9484	.3751	.8018	.2286	.6553	.0820	.5088	.9355	.3622
731	.2415	.6683	.0950	.5217	.9485	.3752	.8019	.2287	.6554	.0821	.5089	.9356	.3623
734	.2416	.6684	.0951	.5218	.9486	.3753	.8020	.2288	.6555	.0822	.5090	.9357	.3624
737	.2417	.6684	.0952	.5219	.9486	.3754	.8021	.2288	.6556	.0823	.5091	.9358	.3625
426740	10.2418	10.6685	11.0952	11.5220	11.9487	12.3755	12.8022	13.2289	13.6557	14.0824	14.5092	14.9359	15.3626
743	.2418	.6686	.0953	.5221	.9488	.3755	.8023	.2290	.6558	.0825	.5093	.9360	.3627
746	.2419	.6687	.0954	.5221	.9489	.3756	.8024	.2291	.6559	.0826	.5094	.9361	.3629
549	.2420	.6687	.0955	.5222	.9490	.3757	.8025	.2292	.6560	.0827	.5095	.9362	.3630
752	.2420	.6688	.0956	.5223	.9491	.3758	.8026	.2293	.6561	.0828	.5096	.9363	.3631
426755	10.2421	10.6689	11.0956	11.5224	11.9491	12.3759	12.8027	13.2294	13.6562	14.0829	14.5097	14.9364	15.3632
758	.2422	.6690	.0957	.5225	.9492	.3760	.8027	.2295	.6563	.0830	.5098	.9365	.3633
761	.2423	.6690	.0958	.5225	.9493	.3761	.8028	.2296	.6564	.0831	.5099	.9366	.3634
764	.2423	.6691	.0959	.5226	.9494	.3762	.8029	.2297	.6564	.0832	.5100	.9367	.3635
767	.2424	.6692	.0959	.5227	.9495	.3762	.8030	.2298	.6565	.0833	.5101	.9368	.3636
426670	10.2425	10.6693	11.0960	11.5228	11.9496	12.3763	12.8031	13.2299	13.6566	14.0834	14.5102	14.9370	15.3637
773	.2426	.6693	.0961	.5229	.9496	.3764	.8032	.2300	.6567	.0835	.5103	.9371	.3638
776	.2426	.6694	.0962	.5230	.9497	.3765	.8033	.2301	.6568	.0836	.5104	.9372	.3639
779	.2427	.6695	.0963	.5230	.9498	.3766	.8034	.2301	.6569	.0837	.5105	.9373	.3640
782	.2428	.6696	.0963	.5231	.9499	.3767	.8035	.2302	.6570	.0838	.5106	.9374	.3642
426785	10.2428	10.6696	11.0964	11.5232	11.9500	12.3768	12.8036	13.2303	13.6571	14.0839	14.5107	14.9375	15.3643
788	.2429	.6697	.0965	.5233	.9501	.3769	.8036	.2304	.6572	.0840	.5108	.9376	.3644
791	.2430	.6698	.0966	.5234	.9501	.3769	.8037	.2305	.6573	.0841	.5109	.9377	.3645
794	.2431	.6699	.0966	.5234	.9502	.3770	.8038	.2306	.6574	.0842	.5110	.9378	.3646
797	.2431	.6699	.0967	.5235	.9503	.3771	.8039	.2307	.6575	.0843	.5111	.9379	.3647
426800	10.2432	10.6700	11.0968	11.5236	11.9504	12.3772	12.8040	13.2308	13.6576	14.0844	14.5112	14.9380	15.3648

MEGACYCLES PER SECOND

H A R M O N I C S

BASIC FREQ.	37	38	39	40	41	42	43	44	45	46	47	48	50
426500	15.7805	16.2070	16.6335	17.0600	17.4865	17.9130	18.3395	18.7660	19.1925	19.6190	20.0455	20.4720	21.3250
503	.7806	.2071	.6336	.0601	.4866	.9131	.3396	.7661	.1926	.6191	.0456	.4721	.3252
506	.7807	.2072	.6337	.0602	.4867	.9133	.3398	.7663	.1928	.6193	.0458	.4723	.3253
509	.7808	.2073	.6339	.0604	.4869	.9134	.3399	.7664	.1929	.6194	.0459	.4724	.3255
512	.7809	.2075	.6340	.0605	.4870	.9135	.3400	.7665	.1930	.6196	.0461	.4726	.3256
426515	15.7811	16.2076	16.6341	17.0606	17.4871	17.9136	18.3401	18.7667	19.1932	19.6197	20.0462	20.4727	21.3258
518	.7812	.2077	.6342	.0607	.4872	.9138	.3403	.7668	.1933	.6198	.0463	.4729	.3259
521	.7813	.2078	.6343	.0608	.4874	.9139	.3404	.7669	.1934	.6200	.0465	.4730	.3261
524	.7814	.2079	.6344	.0610	.4875	.9140	.3405	.7671	.1936	.6201	.0466	.4732	.3262
527	.7815	.2080	.6346	.0611	.4876	.9141	.3407	.7672	.1937	.6202	.0468	.4733	.3264
426530	15.7816	16.2081	16.6347	17.0612	17.4877	17.9143	18.3408	18.7673	19.1939	19.6204	20.0469	20.4734	21.3265
533	.7817	.2083	.6348	.0613	.4879	.9144	.3409	.7675	.1940	.6205	.0471	.4736	.3267
536	.7818	.2084	.6349	.0614	.4880	.9145	.3410	.7676	.1941	.6207	.0472	.4737	.3268
539	.7819	.2085	.6350	.0616	.4881	.9146	.3412	.7677	.1943	.6208	.0473	.4739	.3270
542	.7821	.2086	.6351	.0617	.4882	.9148	.3413	.7678	.1944	.6209	.0475	.4740	.3271
426545	15.7822	16.2087	16.6353	17.0618	17.4883	17.9149	18.3414	18.7680	19.1945	19.6211	20.0476	20.4742	21.3273
548	.7823	.2088	.6354	.0619	.4885	.9150	.3416	.7681	.1947	.6212	.0478	.4743	.3274
551	.7824	.2089	.6355	.0620	.4886	.9151	.3417	.7682	.1948	.6213	.0479	.4744	.3276
554	.7825	.2091	.6356	.0622	.4887	.9153	.3418	.7684	.1949	.6215	.0480	.4746	.3277
557	.7826	.2092	.6357	.0623	.4888	.9154	.3420	.7685	.1951	.6216	.0482	.4747	.3279
426560	15.7827	16.2093	16.6358	17.0624	17.4890	17.9155	18.3421	18.7686	19.1952	19.6218	20.0483	20.4749	21.3280
563	.7828	.2094	.6360	.0625	.4891	.9156	.3422	.7688	.1953	.6219	.0485	.4750	.3282
566	.7829	.2095	.6361	.0626	.4892	.9158	.3423	.7689	.1955	.6220	.0486	.4752	.3283
569	.7831	.2096	.6362	.0628	.4893	.9159	.3425	.7690	.1956	.6222	.0487	.4753	.3285
572	.7832	.2097	.6363	.0629	.4895	.9160	.3426	.7692	.1957	.6223	.0489	.4755	.3286
426575	15.7833	16.2099	16.6364	17.0630	17.4896	17.9162	18.3427	18.7693	19.1959	19.6225	20.0490	20.4756	21.3288
578	.7834	.2100	.6365	.0631	.4897	.9163	.3429	.7694	.1960	.6226	.0492	.4757	.3289
581	.7835	.2101	.6367	.0632	.4898	.9164	.3430	.7696	.1961	.6227	.0493	.4759	.3291
584	.7836	.2102	.6368	.0634	.4899	.9165	.3431	.7697	.1963	.6229	.0494	.4760	.3292
587	.7837	.2103	.6369	.0635	.4901	.9167	.3432	.7698	.1964	.6230	.0496	.4762	.3294
426590	15.7838	16.2104	16.6370	17.0636	17.4902	17.9168	18.3434	18.7700	19.1966	19.6231	20.0497	20.4763	21.3295
593	.7839	.2105	.6371	.0637	.4903	.9169	.3435	.7701	.1967	.6233	.0499	.4765	.3297
596	.7841	.2106	.6372	.0638	.4904	.9170	.3436	.7702	.1968	.6234	.0500	.4766	.3298
599	.7842	.2108	.6374	.0640	.4906	.9172	.3438	.7704	.1970	.6236	.0502	.4768	.3300
602	.7843	.2109	.6375	.0641	.4907	.9173	.3439	.7705	.1971	.6237	.0503	.4769	.3301
426605	15.7844	16.2110	16.6376	17.0642	17.4908	17.9174	18.3440	18.7706	19.1972	19.6238	20.0504	20.4770	21.3303
608	.7845	.2111	.6377	.0643	.4909	.9175	.3441	.7708	.1974	.6240	.0506	.4772	.3304
611	.7846	.2112	.6378	.0644	.4911	.9177	.3443	.7709	.1975	.6241	.0507	.4773	.3306
614	.7847	.2113	.6379	.0646	.4912	.9178	.3444	.7710	.1976	.6242	.0509	.4775	.3307
617	.7848	.2114	.6381	.0647	.4913	.9179	.3445	.7711	.1978	.6244	.0510	.4776	.3309
426620	15.7849	16.2116	16.6382	17.0648	17.4914	17.9180	18.3447	18.7713	19.1979	19.6245	20.0511	20.4778	21.3310
623	.7851	.2117	.6383	.0649	.4915	.9182	.3448	.7714	.1980	.6247	.0513	.4779	.3312
626	.7852	.2118	.6384	.0650	.4917	.9183	.3449	.7715	.1982	.6248	.0514	.4780	.3313
629	.7853	.2119	.6385	.0652	.4918	.9184	.3450	.7717	.1983	.6249	.0516	.4782	.3315
632	.7854	.2120	.6386	.0653	.4919	.9185	.3452	.7718	.1984	.6251	.0517	.4783	.3316
426635	15.7855	16.2121	16.6388	17.0654	17.4920	17.9187	18.3453	18.7719	19.1986	19.6252	20.0518	20.4785	21.3318
638	.7856	.2122	.6389	.0655	.4922	.9188	.3454	.7721	.1987	.6253	.0520	.4786	.3319
641	.7857	.2124	.6390	.0656	.4923	.9189	.3456	.7722	.1988	.6255	.0521	.4788	.3321
644	.7858	.2125	.6391	.0658	.4924	.9190	.3457	.7723	.1990	.6256	.0523	.4789	.3322
647	.7859	.2126	.6392	.0659	.4925	.9192	.3458	.7725	.1991	.6258	.0524	.4791	.3324
426650	15.7861	16.2127	16.6394	17.0660	17.4927	17.9193	18.3460	18.7726	19.1993	19.6259	20.0526	20.4792	21.3325
653	.7862	.2128	.6395	.0661	.4928	.9194	.3461	.7727	.1994	.6260	.0527	.4793	.3327
656	.7863	.2129	.6296	.0662	.4929	.9196	.3462	.7729	.1995	.6262	.0528	.4795	.3328
659	.7864	.2130	.6397	.0664	.4930	.9197	.3463	.7730	.1997	.6263	.0530	.4796	.3330
662	.7865	.2132	.6398	.0665	.4931	.9198	.3465	.7731	.1998	.6265	.0531	.4798	.3331
426665	15.7866	16.2133	16.6399	17.0666	17.4933	17.9199	18.3466	18.7733	19.1999	19.6266	20.0533	20.4799	21.3333
668	.7867	.2134	.6401	.0667	.4934	.9201	.3467	.7734	.2001	.6267	.0534	.4801	.3334
671	.7868	.2135	.6402	.0668	.4935	.9202	.3469	.7735	.2002	.6269	.0535	.4802	.3336
674	.7869	.2136	.6403	.0670	.4936	.9203	.3470	.7737	.2003	.6270	.0537	.4804	.3337
677	.7870	.2137	.6404	.0671	.4938	.9204	.3471	.7738	.2005	.6271	.0538	.4805	.3339
426680	15.7872	16.2138	16.6405	17.0672	17.4939	17.9206	18.3472	18.7739	19.2006	19.6273	20.0540	20.4806	21.3340
683	.7873	.2140	.6406	.0673	.4940	.9207	.3474	.7741	.2007	.6274	.0541	.4808	.3342
686	.7874	.2141	.6408	.0674	.4941	.9208	.3475	.7742	.2009	.6276	.0542	.4809	.3343
689	.7875	.2142	.6409	.0676	.4942	.9209	.3476	.7743	.2010	.6277	.0544	.4811	.3345
692	.7876	.2143	.6410	.0677	.4944	.9211	.3478	.7744	.2011	.6278	.0545	.4812	.3346
426695	15.7877	16.2144	16.6411	17.0678	17.4945	17.9212	18.3479	18.7746	19.2013	19.6280	20.0547	20.4814	21.3348
698	.7878	.2145	.6412	.0679	.4946	.9213	.3480	.7747	.2014	.6281	.0548	.4815	.3349
701	.7879	.2146	.6413	.0680	.4947	.9214	.3481	.7748	.2015	.6282	.0549	.4816	.3351
704	.7880	.2148	.6415	.0682	.4949	.9216	.3483	.7750	.2017	.6284	.0551	.4818	.3352
707	.7882	.2149	.6416	.0683	.4950	.9217	.3484	.7751	.2018	.6285	.0552	.4819	.3354
426710	15.7883	16.2150	16.6417	17.0684	17.4951	17.9218	18.3485	18.7752	19.2020	19.6287	20.0554	20.4821	21.3355
713	.7884	.2151	.6418	.0685	.4952	.9219	.3487	.7754	.2021	.6288	.0555	.4822	.3357
716	.7885	.2152	.6419	.0686	.4954	.9221	.3488	.7755	.2022	.6289	.0557	.4824	.3358
719	.7886	.2153	.6420	.0688	.4955	.9222	.3489	.7756	.2024	.6291	.0558	.4825	.3360
722	.7887	.2154	.6422	.0689	.4956	.9223	.3490	.7758	.2025	.6292	.0559	.4827	.3361
426725	15.7888	16.2156	16.6423	17.0690	17.4957	17.9225	18.3492	18.7759	19.2026	19.6294	20.0561	20.4828	21.3363
728	.7889	.2157	.6424	.0691	.4958	.9226	.3493	.7760	.2028	.6295	.0562	.4829	.3364
731	.7890	.2158	.6425	.0692	.4960	.9227	.3494	.7762	.2029	.6296	.0564	.4831	.3366
734	.7892	.2159	.6426	.0694	.4961	.9228	.3496	.7763	.2030	.6298	.0565	.4832	.3367
737	.7893	.2160	.6427	.0695	.4962	.9230	.3497	.7764	.2032	.6299	.0566	.4834	.3369
426740	15.7894	16.2161	16.6429	17.0696	17.4963	17.9231	18.3498	18.7766	19.2033	19.6300	20.0568	20.4835	21.3370
743	.7895	.2162	.6430	.0697	.4965	.9232	.3499	.7767	.2034	.6302	.0569	.4837	.3372
746	.7896	.2163	.6431	.0698	.4966	.9233	.3501	.7768	.2036	.6303	.0571	.4838	.3373
749	.7897	.2165	.6432	.0700	.4967	.9235	.3502	.7770	.2037	.6305	.0572	.4840	.3375
752	.7898	.2166	.6433	.0701	.4968	.9236	.3503	.7771	.2038	.6306	.0573	.4841	.3376
426755	15.7899	16.2167	16.6434	17.0702	17.4970	17.9237	18.3505	18.7772	19.2040	19.6307	20.0575	20.4842	21.3378
758	.7900	.2168	.6436	.0703	.4971	.9238	.3506	.7774	.2041	.6309	.0576	.4844	.3379
761	.7902	.2169	.6437	.0704	.4972	.9240	.3507	.7775	.2042	.6310	.0578	.4845	.3381
764	.7903	.2170	.6438	.0706	.4973	.9241	.3509	.7776	.2044	.6311	.0579	.4847	.3382
767	.7904	.2171	.6439	.0707	.4974	.9242	.3510	.7777	.2045	.6313	.0580	.4848	.3384
426770	15.7905	16.2173	16.6440	17.0708	17.4976	17.9243	18.3511	18.7779	19.2047	19.6314	20.0582	20.4850	21.3385
773	.7906	.2174	.6441	.0709	.4977	.9245	.3512	.7780	.2048	.6316	.0583	.4851	.3387
776	.7907	.2175	.6443	.0710	.4978	.9246	.3514	.7781	.2049	.6317	.0585	.4852	.3388
779	.7908	.2176	.6444	.0712	.4979	.9247	.3515	.7783	.2051	.6318	.0586	.4854	.3390
782	.7909	.2177	.6445	.0713	.4981	.9248	.3516	.7784	.2052	.6320	.0588	.4855	.3391
426785	15.7910	16.2178	16.6446	17.0714	17.4982	17.9250	18.3518	18.7785	19.2053	19.6321	20.0589	20.4857	21.3393
788	.7912	.2179	.6447	.0715	.4983	.9251	.3519	.7787	.2055	.6322	.0590	.4858	.3394
791	.7913	.2181	.6448	.0716	.4984	.9252	.3520	.7788	.2056	.6324	.0592	.4860	.3396
794	.7914	.2182	.6450	.0718	.4986	.9253	.3521	.7789	.2057	.6325	.0593	.4861	.3397
797	.7915	.2183	.6451	.0719	.4987	.9255	.3523	.7791	.2059	.6327	.0595	.4863	.3399
426800	15.7916	16.2184	16.6452	17.0720	17.4988	17.9256	18.3524	18.7792	19.2060	19.6328	20.0596	20.4864	21.3400

H A R M O N I C S

BASIC FREQ.	24	25	26	27	28	29	30	31	32	33	34	35	36
426800	10.2432	10.6700	10.0968	11.5236	11.9504	12.3772	12.8040	13.2308	13.6576	14.0844	14.5112	14.9380	15.3648
803	.2433	.6701	.0969	.5237	.9505	.3773	.8041	.2309	.6577	.0845	.5113	.9381	.3649
806	.2433	.6702	.0970	.5238	.9506	.3774	.8042	.2310	.6578	.0846	.5114	.9382	.3650
809	.2434	.6702	.0970	.5238	.9507	.3775	.8043	.2311	.6579	.0847	.5115	.9383	.3651
812	.2435	.6703	.0971	.5239	.9507	.3775	.8044	.2312	.6580	.0848	.5116	.9384	.3652
426815	10.2436	10.6704	11.0972	11.5240	11.9508	12.3776	12.8045	13.2313	13.6581	14.0849	14.5117	14.9385	15.3653
818	.2436	.6705	.0973	.5241	.9509	.3777	.8045	.2314	.6582	.0850	.5118	.9386	.3654
821	.2437	.6705	.0973	.5242	.9510	.3778	.8046	.2315	.6583	.0851	.5119	.9387	.3656
824	.2438	.6706	.0974	.5242	.9511	.3779	.8047	.2315	.6584	.0852	.5120	.9388	.3657
827	.2438	.6707	.0975	.5243	.9512	.3780	.8048	.2316	.6585	.0853	.5121	.9389	.3658
426830	10.2439	10.6708	11.0976	11.5244	11.9512	12.3781	12.8049	13.2317	13.6586	14.0854	14.5122	14.9391	15.3659
833	.2440	.6708	.0977	.5245	.9513	.3782	.8050	.2318	.6587	.0855	.5123	.9392	.3660
836	.2441	.6709	.0977	.5246	.9514	.3782	.8051	.2319	.6588	.0856	.5124	.9393	.3661
839	.2441	.6710	.0978	.5247	.9515	.3783	.8052	.2320	.6588	.0857	.5125	.9394	.3662
842	.2442	.6711	.0979	.5247	.9516	.3784	.8053	.2321	.6589	.0858	.5126	.9395	.3663
426845	10.2443	10.6711	11.0980	11.5248	11.9517	12.3785	12.8054	13.2322	13.6590	14.0859	14.5127	14.9396	15.3664
848	.2444	.6712	.0980	.5249	.9517	.3786	.8054	.2323	.6591	.0860	.5128	.9397	.3665
851	.2444	.6713	.0981	.5250	.9518	.3787	.8055	.2324	.6592	.0861	.5129	.9398	.3666
854	.2445	.6714	.0982	.5251	.9519	.3788	.8056	.2325	.6593	.0862	.5130	.9399	.3667
857	.2446	.6714	.0983	.5251	.9520	.3789	.8057	.2326	.6594	.0863	.5131	.9400	.3669
426860	10.2446	10.6715	11.0984	11.5252	11.9521	12.3789	12.8058	13.2327	13.6595	14.0864	14.5132	14.9401	15.3670
863	.2447	.6716	.0984	.5253	.9522	.3790	.8059	.2328	.6596	.0865	.5133	.9402	.3671
866	.2448	.6717	.0985	.5254	.9522	.3791	.8060	.2328	.6597	.0866	.5134	.9403	.3672
869	.2449	.6717	.0986	.5255	.9523	.3792	.8061	.2329	.6598	.0867	.5135	.9404	.3673
872	.2449	.6718	.0987	.5255	.9524	.3793	.8062	.2330	.6599	.0868	.5136	.9405	.3674
426875	10.2450	10.6719	11.0988	11.5256	11.9525	12.3794	12.8063	13.2331	13.6600	14.0869	14.5138	14.9406	15.3675
878	.2451	.6720	.0988	.5257	.9526	.3795	.8063	.2332	.6601	.0870	.5139	.9407	.3676
881	.2451	.6720	.0989	.5258	.9527	.3795	.8064	.2333	.6602	.0871	.5140	.9408	.3677
884	.2452	.6721	.0990	.5259	.9528	.3796	.8065	.2334	.6603	.0872	.5141	.9409	.3678
887	.2453	.6722	.0991	.5259	.9528	.3797	.8066	.2335	.6604	.0873	.5142	.9410	.3679
426890	10.2454	10.6723	11.0991	11.5260	11.9529	12.3798	12.8067	13.2336	13.6605	14.0874	14.5143	14.9412	15.3680
893	.2454	.6723	.0992	.5261	.9530	.3799	.8068	.2337	.6606	.0875	.5144	.9413	.3681
896	.2455	.6724	.0993	.5262	.9531	.3800	.8069	.2338	.6607	.0876	.5145	.9414	.3683
899	.2456	.6725	.0994	.5263	.9532	.3801	.8070	.2339	.6608	.0877	.5146	.9415	.3684
902	.2456	.6726	.0995	.5264	.9533	.3802	.8071	.2340	.6609	.0878	.5147	.9416	.3685
426905	10.2457	10.6726	11.0995	11.5264	11.9533	12.3802	12.8072	13.2341	13.6610	14.0879	14.5148	14.9417	15.3686
908	.2458	.6727	.0996	.5265	.9534	.3803	.8072	.2341	.6611	.0880	.5149	.9418	.3687
911	.2459	.6728	.0997	.5266	.9535	.3804	.8073	.2342	.6612	.0881	.5150	.9419	.3688
914	.2459	.6729	.0998	.5267	.9536	.3805	.8074	.2343	.6612	.0882	.5151	.9420	.3689
917	.2460	.6729	.0998	.5268	.9537	.3806	.8075	.2344	.6613	.0883	.5152	.9421	.3690
426920	10.2461	10.6730	11.0999	11.5268	11.9538	12.3807	12.8076	13.2345	13.6614	14.0884	14.5153	14.9422	15.3691
923	.2462	.6731	.1000	.5269	.9538	.3808	.8077	.2346	.6615	.0885	.5154	.9423	.3692
926	.2462	.6732	.1001	.5270	.9539	.3809	.8078	.2347	.6616	.0886	.5155	.9424	.3693
929	.2463	.6732	.1002	.5271	.9540	.3809	.8079	.2348	.6617	.0887	.5156	.9425	.3694
932	.2464	.6733	.1002	.5272	.9541	.3810	.8080	.2349	.6618	.0888	.5157	.9426	.3696
426935	10.2464	10.6734	11.1003	11.5272	11.9542	12.3811	12.8081	13.2350	13.6619	14.0889	14.5158	14.9427	15.3697
938	.2465	.6735	.1004	.5273	.9543	.3812	.8081	.2351	.6620	.0890	.5159	.9428	.3698
941	.2466	.6735	.1005	.5274	.9543	.3813	.8082	.2352	.6621	.0891	.5160	.9429	.3699
944	.2467	.6736	.1005	.5275	.9544	.3814	.8083	.2353	.6622	.0892	.5161	.9430	.3700
947	.2467	.6737	.1006	.5276	.9545	.3815	.8084	.2354	.6623	.0893	.5162	.9431	.3701
426950	10.2468	10.6738	11.1007	11.5277	11.9546	12.3816	12.8085	13.2355	13.6624	14.0894	14.5163	14.9433	15.3702
953	.2469	.6738	.1008	.5277	.9547	.3816	.8086	.2355	.6625	.0894	.5164	.9434	.3703
956	.2469	.6739	.1009	.5278	.9548	.3817	.8087	.2356	.6626	.0895	.5165	.9435	.3704
959	.2470	.6740	.1009	.5279	.9549	.3818	.8088	.2357	.6627	.0896	.5166	.9436	.3705
962	.2471	.6741	.1010	.5280	.9549	.3819	.8089	.2358	.6628	.0897	.5167	.9437	.3706
426965	10.2472	10.6741	11.1011	11.5281	11.9550	12.3820	12.8090	13.2359	13.6629	14.0898	14.5168	14.9438	15.3707
968	.2472	.6742	.1012	.5281	.9551	.3821	.8090	.2360	.6630	.0899	.5169	.9439	.3708
971	.2473	.6743	.1012	.5282	.9552	.3822	.8091	.2361	.6631	.0900	.5170	.9440	.3710
974	.2474	.6744	.1013	.5283	.9553	.3822	.8092	.2362	.6632	.0901	.5171	.9441	.3711
977	.2474	.6744	.1014	.5284	.9554	.3823	.8093	.2363	.6633	.0902	.5172	.9442	.3712
426980	10.2475	10.6745	11.1015	11.5285	11.9554	12.3824	12.8094	13.2364	13.6634	14.0903	14.5173	14.9443	15.3713
983	.2476	.6746	.1016	.5285	.9555	.3825	.8095	.2365	.6635	.0904	.5174	.9444	.3714
986	.2477	.6747	.1016	.5286	.9556	.3826	.8096	.2366	.6636	.0905	.5175	.9445	.3715
989	.2477	.6747	.1017	.5287	.9557	.3827	.8097	.2367	.6636	.0906	.5176	.9446	.3716
992	.2478	.6748	.1018	.5288	.9558	.3828	.8098	.2368	.6637	.0907	.5177	.9447	.3717
426995	10.2479	10.6749	11.1019	11.5289	11.9559	12.3829	12.8099	13.2368	13.6638	14.0908	14.5178	14.9448	15.3718
998	.2480	.6750	.1019	.5289	.9559	.3829	.8099	.2369	.6639	.0909	.5179	.9449	.3719
427001	.2480	.6750	.1020	.5290	.9560	.3830	.8100	.2370	.6640	.0910	.5180	.9450	.3720
004	.2481	.6751	.1021	.5291	.9561	.3831	.8101	.2371	.6641	.0911	.5181	.9451	.3721
007	.2482	.6752	.1022	.5292	.9562	.3832	.8102	.2372	.6642	.0912	.5182	.9452	.3723
427010	10.2482	10.6753	11.1023	11.5293	11.9563	12.3833	12.8103	13.2373	13.6643	14.0913	14.5183	14.9454	15.3724
013	.2483	.6753	.1023	.5294	.9564	.3834	.8104	.2374	.6644	.0914	.5184	.9455	.3725
016	.2484	.6754	.1024	.5294	.9564	.3835	.8105	.2375	.6645	.0915	.5185	.9456	.3726
019	.2485	.6755	.1025	.5295	.9565	.3836	.8106	.2376	.6646	.0916	.5186	.9457	.3727
022	.2485	.6756	.1026	.5296	.9566	.3836	.8107	.2377	.6647	.0917	.5187	.9458	.3728
427025	10.2486	10.6756	11.1027	11.5297	11.9567	12.3837	12.8108	13.2378	13.6648	14.0918	14.5189	14.9459	15.3729
028	.2487	.6757	.1027	.5298	.9568	.3838	.8108	.2379	.6649	.0919	.5190	.9460	.3730
031	.2487	.6758	.1028	.5298	.9569	.3839	.8109	.2380	.6650	.0920	.5191	.9461	.3731
034	.2488	.6759	.1029	.5299	.9570	.3840	.8110	.2381	.6651	.0921	.5192	.9462	.3732
037	.2489	.6759	.1030	.5300	.9570	.3841	.8111	.2381	.6652	.0922	.5193	.9463	.3733
427040	10.2490	10.6760	11.1030	11.5301	11.9571	12.3842	12.8112	13.2382	13.6653	14.0923	14.5194	14.9464	15.3734
043	.2490	.6761	.1031	.5302	.9572	.3842	.8113	.2383	.6654	.0924	.5195	.9465	.3735
046	.2491	.6762	.1032	.5302	.9573	.3843	.8114	.2384	.6655	.0925	.5196	.9466	.3737
049	.2492	.6762	.1033	.5303	.9574	.3844	.8115	.2385	.6656	.0926	.5197	.9467	.3738
052	.2492	.6763	.1034	.5304	.9575	.3845	.8116	.2386	.6657	.0927	.5198	.9468	.3739
427055	10.2493	10.6764	11.1034	11.5305	11.9575	12.3846	12.8117	13.2387	13.6658	14.0928	14.5199	14.9469	15.3740
058	.2494	.6765	.1035	.5306	.9576	.3847	.8117	.2388	.6659	.0929	.5200	.9470	.3741
061	.2495	.6765	.1036	.5306	.9577	.3848	.8118	.2389	.6660	.0930	.5201	.9471	.3742
064	.2495	.6766	.1037	.5307	.9578	.3849	.8119	.2390	.6660	.0931	.5202	.9472	.3743
067	.2496	.6767	.1037	.5308	.9579	.3849	.8120	.2391	.6661	.0932	.5203	.9473	.3744
427070	10.2497	10.6768	11.1038	11.5309	11.9580	12.3850	12.8121	13.2392	13.6662	14.0933	14.5204	14.9475	15.3745
073	.2498	.6768	.1039	.5310	.9580	.3851	.8122	.2393	.6663	.0934	.5205	.9476	.3746
076	.2498	.6769	.1040	.5311	.9581	.3852	.8123	.2394	.6664	.0935	.5206	.9477	.3747
079	.2499	.6770	.1041	.5311	.9582	.3853	.8124	.2394	.6665	.0936	.5207	.9478	.3748
082	.2500	.6771	.1041	.5312	.9583	.3854	.8125	.2395	.6666	.0937	.5208	.9479	.3750
427085	10.2500	10.6771	11.1042	11.5313	11.9584	12.3855	12.8126	13.2396	13.6667	14.0938	14.5209	14.9480	15.3751
088	.2501	.6772	.1043	.5314	.9585	.3856	.8126	.2397	.6668	.0939	.5210	.9481	.3752
091	.2502	.6773	.1044	.5315	.9585	.3856	.8127	.2398	.6669	.0940	.5211	.9482	.3753
094	.2503	.6774	.1044	.5315	.9586	.3857	.8128	.2399	.6670	.0941	.5212	.9483	.3754
097	.2503	.6774	.1045	.5316	.9587	.3858	.8129	.2400	.6671	.0942	.5213	.9484	.3755
427100	10.2504	10.6775	11.1046	11.5317	11.9588	12.3859	12.8130	13.2401	13.6672	14.0943	14.5214	14.9485	15.3756

MEGACYCLES PER SECOND

HARMONICS

BASIC FREQ.	37	38	39	40	41	42	43	44	45	46	47	48	50
426800	15.7916	16.2184	16.6452	17.0720	17.4988	17.9256	18.3524	18.7792	19.2060	19.6328	20.0596	20.4864	21.3400
803	.7917	.2185	.6453	.0721	.4989	.9257	.3525	.7793	.2061	.6329	.0597	.4865	.3402
806	.7918	.2186	.6454	.0722	.4990	.9259	.3527	.7795	.2063	.6331	.0599	.4867	.3403
809	.7919	.2187	.6456	.0724	.4992	.9260	.3528	.7796	.2064	.6332	.0600	.4868	.3405
812	.7920	.2189	.6457	.0725	.4993	.9261	.3529	.7797	.2065	.6334	.0602	.4870	.3406
426815	17.6922	16.2190	16.6458	17.0726	17.4994	17.9262	18.3530	18.7799	19.2067	19.6335	20.0603	20.4871	21.3408
818	.7923	.2191	.6459	.0727	.4995	.9264	.3532	.7800	.2068	.6336	.0604	.4873	.3409
821	.7924	.2192	.6460	.0728	.4997	.9265	.3533	.7801	.2069	.6338	.0606	.4874	.3411
824	.7925	.2193	.6461	.0730	.4998	.9266	.3534	.7803	.2071	.6339	.0607	.4876	.3412
827	.7926	.2194	.6463	.0731	.4999	.9267	.3536	.7804	.2072	.6340	.0609	.4877	.3414
426830	15.7927	16.2195	16.6464	17.0732	17.5000	17.9269	18.3537	18.7805	19.2074	19.6342	20.0610	20.4878	21.3415
833	.7928	.2197	.6465	.0733	.5002	.9270	.3538	.7807	.2075	.6343	.0612	.4880	.3417
836	.7929	.2198	.6466	.0734	.5003	.9271	.3539	.7808	.2076	.6345	.0613	.4881	.3418
839	.7930	.2199	.6467	.0736	.5004	.9272	.3541	.7809	.2078	.6346	.0614	.4883	.3420
842	.7932	.2200	.6468	.0737	.5005	.9274	.3542	.7810	.2079	.6347	.0616	.4884	.3421
426845	15.7933	16.2201	16.6470	17.0738	17.5006	17.9275	18.3543	18.7812	19.2080	19.6349	20.0617	20.4886	21.3423
848	.7934	.2202	.6471	.0739	.5008	.9276	.3545	.7813	.2082	.6350	.0619	.4887	.3424
851	.7935	.2203	.6472	.0740	.5009	.9277	.3546	.7814	.2083	.6351	.0620	.4888	.3426
854	.7936	.2205	.6473	.0742	.5010	.9279	.3547	.7816	.2084	.6353	.0621	.4890	.3427
857	.7937	.2206	.6474	.0743	.5011	.9280	.3549	.7817	.2086	.6354	.0623	.4891	.3429
426860	15.7938	16.2207	16.6475	17.0744	17.5013	17.9281	18.3550	18.7818	19.2087	19.6356	20.0624	20.4893	21.3430
863	.7939	.2208	.6477	.0745	.5014	.9282	.3551	.7820	.2088	.6357	.0626	.4894	.3432
866	.7940	.2209	.6478	.0746	.5015	.9284	.3552	.7821	.2090	.6358	.0627	.4896	.3433
869	.7942	.2210	.6479	.0748	.5016	.9285	.3554	.7822	.2091	.6360	.0628	.4897	.3435
872	.7943	.2211	.6480	.0749	.5018	.9286	.3555	.7824	.2092	.6361	.0630	.4899	.3436
426875	15.7944	16.2213	16.6481	17.0750	17.5019	17.9288	18.3556	18.7825	19.2094	19.6363	20.0631	20.4900	21.3438
878	.7945	.2214	.6482	.0751	.5020	.9289	.3558	.7826	.2095	.6364	.0633	.4901	.3439
881	.7946	.2215	.6484	.0752	.5021	.9290	.3559	.7828	.2096	.6365	.0634	.4903	.3441
884	.7947	.2216	.6485	.0754	.5022	.9291	.3560	.7829	.2098	.6367	.0635	.4904	.3442
887	.7948	.2217	.6486	.0655	.5024	.9293	.3561	.7830	.2099	.6368	.0637	.4906	.3444
426890	15.7949	16.2218	16.6487	17.0756	17.5025	17.9294	18.3563	18.7832	19.2101	19.6369	20.0638	20.4907	21.3445
893	.7950	.2219	.6488	.0757	.5026	.9295	.3564	.7833	.2102	.6371	.0640	.4909	.3447
896	.7952	.2220	.6489	.0758	.5027	.9296	.3565	.7834	.2103	.6372	.0641	.4910	.3448
899	.7953	.2222	.6491	.0760	.5029	.9298	.3567	.7836	.2105	.6374	.0643	.4912	.3450
902	.7954	.2223	.6492	.0761	.5030	.9299	.3568	.7837	.2106	.6375	.0644	.4913	.3451
426905	15.7955	16.2224	16.6493	17.0762	17.5031	17.9300	18.3569	18.7838	19.2107	19.6376	20.0645	20.4914	21.3453
908	.7956	.2225	.6494	.0763	.5032	.9301	.3570	.7840	.2109	.6378	.0647	.4916	.3454
911	.7957	.2226	.6495	.0764	.5034	.9303	.3572	.7841	.2110	.6379	.0648	.4917	.3456
914	.7958	.2227	.6496	.0766	.5035	.9304	.3573	.7842	.2111	.6380	.0650	.4919	.3457
917	.7959	.2228	.6498	.0767	.5036	.9305	.3574	.7843	.2113	.6382	.0651	.4920	.3459
426920	15.7960	16.2230	16.6499	17.0768	17.5037	17.9306	18.3576	18.7845	19.2114	19.6383	20.0652	20.4922	21.3460
923	.7962	.2231	.6500	.0769	.5038	.9308	.3577	.7846	.2115	.6385	.0654	.4923	.3462
926	.7963	.2232	.6501	.0770	.5040	.9309	.3578	.7847	.2117	.6386	.0655	.4924	.3463
929	.6964	.2233	.6502	.0772	.5041	.9310	.3579	.7849	.2118	.6387	.0657	.4926	.3465
932	.7965	.2234	.6503	.0773	.5042	.9311	.3581	.7850	.2119	.6389	.0658	.4927	.3466
426935	15.7966	16.2235	16.6505	17.0774	17.5043	17.9313	18.3582	18.7851	19.2121	19.6390	20.0659	20.4929	21.3468
938	.7967	.2236	.6506	.0775	.5045	.9314	.3583	.7853	.2122	.6391	.0661	.4930	.3469
941	.7968	.2238	.6507	.0776	.5046	.9315	.3585	.7854	.2123	.6393	.0662	.4932	.3471
944	.7969	.2239	.6508	.0778	.5047	.9316	.3586	.7855	.2125	.6394	.0664	.4933	.3472
947	.7970	.2240	.6509	.0779	.5048	.9318	.3587	.7857	.2126	.6396	.0665	.4935	.3474
426950	15.7972	16.2241	16.6511	17.0780	17.5050	17.9319	18.3589	18.7858	19.2128	19.6397	20.0667	20.4936	21.3475
953	.7973	.2242	.6512	.0781	.5051	.9320	.3590	.7859	.2129	.6398	.0668	.4937	.3477
956	.7974	.2243	.6513	.0782	.5052	.9322	.3591	.7861	.2130	.6400	.0669	.4939	.3478
959	.7975	.2244	.6514	.0784	.5053	.9323	.3592	.7862	.2132	.6401	.0671	.4940	.3480
962	.7976	.2246	.6515	.0785	.5054	.9324	.3594	.7863	.2133	.6403	.0672	.4942	.3481
426965	15.7977	16.2247	16.6516	17.0786	17.5056	17.9325	18.3595	18.7865	19.2134	19.6404	20.0674	20.4943	21.3483
968	.7978	.2248	.6518	.0787	.5057	.9327	.3596	.7866	.2136	.6405	.0675	.4945	.3484
971	.7979	.2249	.6519	.0788	.5058	.9328	.3598	.7867	.2137	.6407	.0676	.4946	.3486
974	.7980	.2250	.6520	.0790	.5059	.9329	.3599	.7869	.2138	.6408	.0678	.4948	.3487
977	.7981	.2251	.6521	.0791	.5061	.9330	.3600	.7870	.2140	.6409	.0679	.4949	.3489
426980	15.7983	16.2252	16.6522	17.0792	17.5062	17.9332	18.3601	18.7871	19.2141	19.6411	20.0681	20.4950	21.3490
983	.7984	.2254	.6523	.0793	.5063	.9333	.3603	.7873	.2142	.6412	.0682	.4952	.2492
986	.7985	.2255	.6525	.0794	.5064	.9334	.3604	.7874	.2144	.6414	.0683	.4953	.3493
989	.7986	.2256	.6526	.0796	.5065	.9335	.3605	.7875	.2145	.6415	.0685	.4955	.3495
992	.7987	.2257	.6527	.0797	.5067	.9337	.3607	.7876	.2146	.6416	.0686	.4956	.3496
426995	15.7988	16.2258	16.6528	17.0798	17.5068	17.9338	18.3608	18.7878	19.2148	19.6418	20.0688	20.4958	21.3498
998	.7989	.2259	.6529	.0799	.5069	.9339	.3609	.7879	.2149	.6419	.0689	.4959	.3499
427001	.7990	.2260	.6530	.0800	.5070	.9340	.3610	.7880	.2150	.6420	.0690	.4960	.3501
004	.7991	.2262	.6532	.0802	.5072	.9342	.3612	.7882	.2152	.6422	.0692	.4962	.3502
007	.7993	.2263	.6533	.0803	.5073	.9343	.3613	.7883	.2153	.6423	.0693	.4963	.3504
427010	15.7994	16.2264	16.6534	17.0804	17.5074	17.9344	18.3614	18.7884	19.2155	19.6425	20.0695	20.4965	21.3505
013	.7995	.2265	.6535	.0805	.5075	.9345	.3616	.7886	.2156	.6426	.0696	.4966	.3507
016	.7996	.2266	.6536	.0806	.5077	.9347	.3617	.7887	.2157	.6427	.0698	.4968	.3508
019	.7997	.2267	.6537	.0808	.5078	.9348	.3618	.7888	.2159	.6429	.0699	.4969	.3510
022	.7998	.2268	.6539	.0809	.5079	.9349	.3619	.7890	.2160	.6430	.0700	.4971	.3511
427025	15.7999	16.2270	16.6540	17.0810	17.5080	17.9351	18.3621	18.7891	19.2161	19.6432	20.0702	20.4972	21.3513
028	.8000	.2271	.6541	.0811	.5081	.9352	.3622	.7892	.2163	.6433	.0703	.4973	.3514
031	.8001	.2272	.6542	.0812	.5083	.9353	.3623	.7894	.2164	.6434	.0705	.4975	.3516
034	.8003	.2273	.6543	.0814	.5084	.9354	.3625	.7895	.2165	.6436	.0706	.4976	.3517
037	.8004	.2274	.6544	.0815	.5085	.9356	.3626	.7896	.2167	.6437	.0707	.4978	.3519
427040	15.8005	16.2275	16.6546	17.0816	17.5086	17.9357	18.3627	18.7898	19.2168	19.6438	20.0709	20.4979	21.3520
043	.8006	.2276	.6547	.0817	.5088	.9358	.3628	.7899	.2169	.6440	.0710	.4981	.3522
046	.8007	.2277	.6548	.0818	.5089	.9359	.3630	.7900	.2171	.6441	.0712	.4982	.3523
049	.8008	.2279	.6549	.0820	.5090	.9361	.3631	.7902	.2172	.6443	.0713	.4984	.3525
052	.8009	.2280	.6550	.0821	.5091	.9362	.3632	.7903	.2173	.6444	.0714	.4985	.3526
427055	15.8010	16.2281	16.6551	17.0822	17.5093	17.9363	18.3634	18.7904	19.2175	19.6445	20.0716	20.4986	21.3528
058	.8011	.2282	.6553	.0823	.5094	.9364	.3635	.7906	.2176	.6447	.0717	.4988	.3529
061	.8013	.2283	.6554	.0824	.5095	.9366	.3636	.7907	.2177	.6448	.0719	.4989	.3531
064	.8014	.2284	.6555	.0826	.5096	.9367	.3638	.7908	.2179	.6449	.0720	.4991	.3532
067	.8015	.2285	.6556	.0827	.5097	.9368	.3639	.7909	.2180	.6451	.0721	.4992	.3534
427070	15.8016	16.2287	16.6557	17.0828	17.5099	17.9369	18.3640	18.7911	19.2182	19.6452	20.0723	20.4994	21.3535
073	.8017	.2288	.6558	.0829	.5100	.9371	.3641	.7912	.2183	.6454	.0724	.4995	.3537
076	.8018	.2289	.6560	.0830	.5101	.9372	.3643	.7913	.2184	.6455	.0726	.4996	.3538
079	.8019	.2290	.6561	.0832	.5102	.9373	.3644	.7915	.2186	.6456	.0727	.4998	.3540
082	.8020	.2291	.6562	.0833	.5104	.9374	.3645	.7916	.2187	.6458	.0729	.4999	.3541
427085	15.8021	16.2292	16.6563	17.0834	17.5105	17.9376	18.3647	18.7917	19.2188	19.6459	20.0730	20.5001	21.3543
088	.8023	.2293	.6564	.0835	.5106	.9377	.3648	.7919	.2190	.6460	.0731	.5002	.3544
091	.8024	.2295	.6565	.0836	.5107	.9378	.3649	.7920	.2191	.6462	.0733	.5004	.3546
094	.8025	.2296	.6567	.0838	.5109	.9379	.3650	.7921	.2192	.6463	.0734	.5005	.3547
097	.8026	.2297	.6568	.0839	.5110	.9381	.3652	.7923	.2194	.6465	.0736	.5007	.3549
427100	15.8027	16.2298	16.6569	17.0840	17.5111	17.9382	18.3653	18.7924	19.2195	19.6466	20.0737	20.5008	21.3550

HARMONICS

BASIC FREQ.	24	25	26	27	28	29	30	31	32	33	34	35	36
427100	10.2504	10.6775	11.1046	11.5317	11.9588	12.3859	12.8130	13.2401	13.6672	14.0943	14.5214	14.9485	15.3756
103	.2505	.6776	.1047	.5318	.9589	.3860	.8131	.2402	.6673	.0944	.5215	.9486	.3757
106	.2505	.6777	.1048	.5319	.9590	.3861	.8132	.2403	.6674	.0945	.5216	.9487	.3758
109	.2506	.6777	.1048	.5319	.9591	.3862	.8133	.2404	.6675	.0946	.5217	.9488	.3759
112	.2507	.6778	.1049	.5320	.9591	.3862	.8134	.2405	.6676	.0947	.5218	.9489	.3760
427115	10.2508	10.6779	11.1050	11.5321	11.9592	12.3863	12.8135	13.2406	13.6677	14.0948	14.5219	14.9490	15.3761
118	.2508	.6780	.1051	.5322	.9593	.3864	.8135	.2407	.6678	.0949	.5220	.9491	.3762
121	.2509	.6780	.1051	.5323	.9594	.3865	.8136	.2408	.6679	.0950	.5221	.9492	.3764
124	.2510	.6781	.1052	.5323	.9595	.3866	.8137	.2408	.6680	.0951	.5222	.9493	.3765
127	.2510	.6782	.1053	.5324	.9596	.3867	.8138	.2409	.6681	.0952	.5223	.9494	.3766
427130	10.2511	10.6783	11.1054	11.5325	11.9596	12.3868	12.8139	13.2410	13.6682	14.0953	14.5224	14.9496	15.3767
133	.2512	.6783	.1055	.5326	.9597	.3869	.8140	.2411	.6683	.0954	.5225	.9497	.3768
136	.2513	.6784	.1055	.5327	.9598	.3869	.8141	.2412	.6684	.0955	.5226	.9498	.3769
139	.2513	.6785	.1056	.5328	.9599	.3870	.8142	.2413	.6684	.0956	.5227	.9499	.3770
142	.2514	.6786	.1057	.5328	.9600	.3871	.8143	.2414	.6685	.0957	.5228	.9500	.3771
427145	10.2515	10.6786	11.1058	11.5329	11.9601	12.3872	12.8144	13.2415	13.6686	14.0958	14.5229	14.9501	15.3772
148	.2516	.6787	.1058	.5330	.9601	.3873	.8144	.2416	.6687	.0959	.5230	.9502	.3773
151	.2516	.6788	.1059	.5331	.9602	.3874	.8145	.2417	.6688	.0960	.5231	.9503	.3774
154	.2517	.6789	.1060	.5332	.9603	.3875	.8146	.2418	.6689	.0961	.5232	.9504	.3775
157	.2518	.6789	.1061	.5332	.9604	.3876	.8147	.2419	.6690	.0962	.5233	.9505	.3777
427160	10.2518	10.6790	11.1062	11.5333	11.9605	12.3876	12.8148	13.2420	13.6691	14.0963	14.5234	14.9506	15.3778
163	.2519	.6791	.1062	.5334	.9606	.3877	.8149	.2421	.6692	.0964	.5235	.9507	.3779
166	.2520	.6792	.1063	.5335	.9606	.3878	.8150	.2421	.6693	.0965	.5236	.9508	.3780
169	.2521	.6792	.1064	.5336	.9607	.3879	.8151	.2422	.6694	.0966	.5237	.9509	.3781
172	.2521	.6793	.1065	.5336	.9608	.3880	.8152	.2423	.6695	.0967	.5238	.9510	.3782
427175	10.2522	10.6794	11.1066	11.5337	11.9609	12.3881	12.8153	13.2424	13.6696	14.0968	14.5240	14.9511	15.3783
178	.2523	.6795	.1066	.5338	.9610	.3882	.8153	.2425	.6697	.0969	.5241	.9512	.3784
181	.2523	.6795	.1067	.5339	.9611	.3882	.8154	.2426	.6698	.0970	.5242	.9513	.3785
184	.2524	.6796	.1068	.5340	.9612	.3883	.8155	.2427	.6699	.0971	.5243	.9514	.3786
187	.2525	.6797	.1069	.5340	.9612	.3884	.8156	.2428	.6700	.0972	.5244	.9515	.3787
427190	10.2526	10.6798	11.1069	11.5341	11.9613	12.3885	12.8157	13.2429	13.6701	14.0973	14.5245	14.9517	15.3788
193	.2526	.6798	.1070	.5342	.9614	.3886	.8158	.2430	.6702	.0974	.5246	.9518	.3789
196	.2527	.6799	.1071	.5343	.9615	.3887	.8159	.2431	.6703	.0975	.5247	.9519	.3791
199	.2528	.6800	.1072	.5344	.9616	.3888	.8160	.2432	.6704	.0976	.5248	.9520	.3792
202	.2528	.6801	.1073	.5345	.9617	.3889	.8161	.2433	.6705	.0977	.5249	.9521	.3793
427205	10.2529	10.6801	11.1073	11.5345	11.9617	12.3889	12.8162	13.2434	13.6706	14.0978	14.5250	14.9522	15.3794
208	.2530	.6802	.1074	.5346	.9618	.3890	.8162	.2434	.6707	.0979	.5251	.9523	.3795
211	.2531	.6803	.1075	.5347	.9619	.3891	.8163	.2435	.6708	.0980	.5252	.9524	.3796
214	.2531	.6804	.1076	.5348	.9620	.3892	.8164	.2436	.6708	.0981	.5253	.9525	.3797
217	.2532	.6804	.1076	.5349	.9621	.3893	.8165	.2437	.6709	.0982	.5254	.9526	.3798
427220	10.2533	10.6805	11.1077	11.5349	11.9622	12.3894	12.8166	13.2438	13.6710	14.0983	14.5255	14.9527	15.3799
223	.2534	.6806	.1078	.5350	.9622	.3895	.8167	.2439	.6711	.0984	.5256	.9528	.3800
226	.2534	.6807	.1079	.5351	.9623	.3896	.8168	.2440	.6712	.0985	.5257	.9529	.3801
229	.2535	.6807	.1080	.5352	.9624	.3896	.8169	.2441	.6713	.0986	.5258	.9530	.3802
232	.2536	.6808	.1080	.5353	.9625	.3897	.8170	.2442	.6714	.0987	.5259	.9531	.3804
427235	10.2536	10.6809	11.1081	11.5353	11.9626	12.3898	12.8171	13.2443	13.6715	14.0988	14.5260	14.9532	15.3805
238	.2537	.6810	.1082	.5354	.9627	.3899	.8171	.2444	.6716	.0989	.5261	.9533	.3806
241	.2538	.6810	.1083	.5355	.9627	.3900	.8172	.2445	.6717	.0990	.5262	.9534	.3807
244	.2539	.6811	.1083	.5356	.9628	.3901	.8173	.2446	.6718	.0991	.5263	.9535	.3808
247	.2539	.6812	.1084	.5357	.9629	.3902	.8174	.2447	.6719	.0992	.5264	.9536	.3809
427250	10.2540	10.6813	11.1085	11.5358	11.9630	12.3903	12.8175	13.2448	13.6720	14.0993	14.5265	14.9538	15.3810
253	.2541	.6813	.1086	.5358	.9631	.3903	.8176	.2448	.6721	.0993	.5266	.9539	.3811
256	.2541	.6814	.1087	.5359	.9632	.3904	.8177	.2449	.6722	.0994	.5267	.9540	.3812
259	.2542	.6815	.1087	.5360	.9633	.3905	.8178	.2450	.6723	.0995	.5268	.9541	.3813
262	.2543	.6816	.1088	.5361	.9633	.3906	.8179	.2451	.6724	.0996	.5269	.9542	.3814
427265	10.2544	10.6816	11.1089	11.5362	11.9634	12.3907	12.8180	13.2452	13.6725	14.0997	14.5270	14.9543	15.3815
268	.2544	.6817	.1090	.5362	.9635	.3908	.8180	.2453	.6726	.0998	.5271	.9544	.3816
271	.2545	.6818	.1090	.5363	.9636	.3909	.8181	.2454	.6727	.0999	.5272	.9545	.3818
274	.2546	.6819	.1091	.5364	.9637	.3909	.8182	.2455	.6728	.1000	.5273	.9546	.3819
277	.2546	.6819	.1092	.5365	.9638	.3910	.8183	.2456	.6729	.1001	.5274	.9547	.3820
427280	10.2547	10.6820	11.1093	11.5366	11.9638	12.3911	12.8184	13.2457	13.6730	14.1002	14.5275	14.9548	15.3821
283	.2548	.6821	.1094	.5366	.9639	.3912	.8185	.2458	.6731	.1003	.5276	.9549	.3822
286	.2549	.6822	.1094	.5367	.9640	.3913	.8186	.2459	.6732	.1004	.5277	.9550	.3823
289	.2549	.6822	.1095	.5368	.9641	.3914	.8187	.2460	.6732	.1005	.5278	.9551	.3824
292	.2550	.6823	.1096	.5369	.9642	.3915	.8188	.2461	.6733	.1006	.5279	.9552	.3825
427295	10.2551	10.6824	11.1097	11.5370	11.9643	12.3916	12.8189	13.2461	13.6734	14.1007	14.5280	14.9553	15.3826
298	.2552	.6825	.1097	.5370	.9643	.3916	.8189	.2462	.6735	.1008	.5281	.9554	.3827
301	.2552	.6825	.1098	.5371	.9644	.3917	.8190	.2463	.6736	.1009	.5282	.9555	.3828
304	.2553	.6826	.1099	.5372	.9645	.3918	.8191	.2464	.6737	.1010	.5283	.9556	.3829
307	.2554	.6827	.1100	.5373	.9646	.3919	.8192	.2465	.6738	.1011	.5284	.9557	.3831
427310	10.2554	10.6828	11.1101	11.5374	11.9647	12.3920	12.8193	13.2466	13.6739	14.1012	14.5285	14.9559	15.3832
313	.2555	.6828	.1101	.5375	.9648	.3921	.8194	.2467	.6740	.1013	.5286	.9560	.3833
316	.2556	.6829	.1102	.5375	.9648	.3922	.8195	.2468	.6741	.1014	.5287	.9561	.3834
319	.2557	.6830	.1103	.5376	.9649	.3923	.8196	.2469	.6742	.1015	.5288	.9562	.3835
322	.2557	.6831	.1104	.5377	.9650	.3923	.8197	.2470	.6743	.1016	.5289	.9563	.3836
427325	10.2558	10.6831	11.1105	11.5378	11.9651	12.3924	12.8198	13.2471	13.6744	14.1017	14.5291	14.9564	15.3837
328	.2559	.6832	.1105	.5379	.9652	.3925	.8198	.2472	.6745	.1018	.5292	.9565	.3838
331	.2559	.6833	.1106	.5379	.9653	.3926	.8199	.2473	.6746	.1019	.5293	.9566	.3839
334	.2560	.6834	.1107	.5380	.9654	.3927	.8200	.2474	.6747	.1020	.5294	.9567	.3840
337	.2561	.6834	.1108	.5381	.9654	.3928	.8201	.2474	.6748	.1021	.5295	.9568	.3841
427340	10.2562	10.6835	11.1108	11.5382	11.9655	12.3929	12.8202	13.2475	13.6749	14.1022	14.5296	14.9569	15.3842
343	.2562	.6836	.1109	.5383	.9656	.3929	.8203	.2476	.6750	.1023	.5297	.9570	.3843
346	.2563	.6837	.1110	.5383	.9657	.3930	.8204	.2477	.6751	.1024	.5298	.9571	.3845
349	.2564	.6837	.1111	.5384	.9658	.3931	.8205	.2478	.6752	.1025	.5299	.9572	.3846
352	.2564	.6838	.1112	.5385	.9659	.3932	.8206	.2479	.6753	.1026	.5300	.9573	.3847
427355	10.2565	10.6839	11.1112	11.5386	11.9659	12.3933	12.8207	13.2480	13.6754	14.1027	14.5301	14.9574	15.3848
358	.2566	.6840	.1113	.5387	.9660	.3934	.8207	.2481	.6755	.1028	.5302	.9575	.3849
361	.2567	.6840	.1114	.5387	.9661	.3935	.8208	.2482	.6756	.1029	.5303	.9576	.3850
364	.2567	.6841	.1115	.5388	.9662	.3936	.8209	.2483	.6756	.1030	.5304	.9577	.3851
367	.2568	.6842	.1115	.5389	.9663	.3936	.8210	.2484	.6757	.1031	.5305	.9578	.3852
427370	10.2569	10.6843	11.1116	11.5390	11.9664	12.3937	12.8211	13.2485	13.6758	14.1032	14.5306	14.9580	15.3853
373	.2570	.6843	.1117	.5391	.9664	.3938	.8212	.2486	.6759	.1033	.5307	.9581	.3854
376	.2570	.6844	.1118	.5392	.9665	.3939	.8213	.2487	.6760	.1034	.5308	.9582	.3855
379	.2571	.6845	.1119	.5392	.9666	.3940	.8214	.2487	.6761	.1035	.5309	.9583	.3856
382	.2572	.6846	.1119	.5393	.9667	.3941	.8215	.2488	.6762	.1036	.5310	.9584	.3858
427385	10.2572	10.6846	11.1120	11.5394	11.9668	12.3942	12.8216	13.2489	13.6763	14.1037	14.5311	14.9585	15.3859
388	.2573	.6847	.1121	.5395	.9669	.3943	.8216	.2490	.6764	.1038	.5312	.9586	.3860
391	.2574	.6848	.1122	.5396	.9669	.3943	.8217	.2491	.6765	.1039	.5313	.9587	.3861
394	.2575	.6849	.1122	.5396	.9670	.3944	.8218	.2492	.6766	.1040	.5314	.9588	.3862
397	.2575	.6849	.1123	.5397	.9671	.3945	.8219	.2493	.6767	.1041	.5315	.9589	.3863
427400	10.2576	10.6850	11.1124	11.5398	11.9672	12.3946	12.8220	13.2494	13.6768	14.1042	14.5316	14.9590	15.3864

MEGACYCLES PER SECOND

H A R M O N I C S

BASIC FREQ.	37	38	39	40	41	42	43	44	45	46	47	48	50
427100	15.8027	16.2298	16.6569	17.0840	17.5111	17.9382	18.3653	18.7924	19.2195	19.6466	20.0737	20.5008	21.3550
103	.8028	.2299	.6570	.0841	.5112	.9383	.3654	.7925	.2196	.6467	.0738	.5009	.3552
106	.8029	.2300	.6571	.0842	.5113	.9385	.3656	.7927	.2198	.6469	.0740	.5011	.3553
109	.8030	.2301	.6573	.0844	.5115	.9386	.3657	.7928	.2199	.6470	.0741	.5012	.3555
112	.8031	.2303	.6574	.0845	.5116	.9387	.3658	.7929	.2200	.6472	.0743	.5014	.3556
427115	15.8033	16.2304	16.6575	17.0846	17.5117	17.9388	18.3659	18.7931	19.2202	19.6473	20.0744	20.5015	21.3558
118	.8034	.2305	.6576	.0847	.5118	.9390	.3661	.7932	.2203	.6474	.0745	.5017	.3559
121	.8035	.2306	.6577	.0848	.5120	.9391	.3662	.7933	.2204	.6476	.0747	.5018	.3561
124	.8036	.2307	.6578	.0850	.5121	.9392	.3663	.7935	.2206	.6477	.0748	.5020	.3562
127	.8037	.2308	.6580	.0851	.5122	.9393	.3665	.7936	.2207	.6478	.0750	.5021	.3564
427130	15.8038	16.2309	16.6581	17.0852	17.5123	17.9395	18.3666	18.7937	19.2209	19.6480	20.0751	20.5022	21.3565
133	.8039	.2311	.6582	.0853	.5125	.9396	.3667	.7939	.2210	.6481	.0753	.5024	.3567
136	.8040	.2312	.6583	.0854	.5126	.9397	.3668	.7940	.2211	.6483	.0754	.5025	.3568
139	.8041	.2313	.6584	.0856	.5127	.9398	.3670	.7941	.2213	.6484	.0755	.5027	.3570
142	.8043	.2314	.6585	.0857	.5128	.9400	.3671	.7942	.2214	.6485	.0757	.5028	.3571
427145	15.8044	16.2315	16.6587	17.0858	17.5129	17.9401	18.3672	18.7944	19.2215	19.6487	20.0758	20.5030	21.3573
148	.8045	.2316	.6588	.0859	.5131	.9402	.3674	.7945	.2217	.6488	.0760	.5031	.3574
151	.8046	.2317	.6589	.0860	.5132	.9403	.3675	.7946	.2218	.6489	.0761	.5032	.3576
154	.8047	.2319	.6590	.0862	.5133	.9405	.3676	.7948	.2219	.6491	.0762	.5034	.3577
157	.8048	.2320	.6591	.0863	.5134	.9406	.3678	.7949	.2221	.6492	.0764	.5035	.3579
427160	15.8049	16.2321	16.6592	17.0864	17.5136	17.9407	18.3679	18.7950	19.2222	19.6494	20.0765	20.5037	21.3580
163	.8050	.2322	.6594	.0865	.5137	.9408	.3680	.7952	.2223	.6495	.0767	.5038	.3582
166	.8051	.2323	.6595	.0866	.5138	.9410	.3681	.7953	.2225	.6496	.0768	.5040	.3583
169	.8053	.2324	.6596	.0868	.5139	.9411	.3683	.7954	.2226	.6498	.0769	.5041	.3585
172	.8054	.2325	.6597	.0869	.5141	.9412	.3684	.7956	.2227	.6499	.0771	.5043	.3586
427175	15.8055	16.2327	16.6598	17.0870	17.5142	17.9414	18.3685	18.7957	19.2229	19.6501	20.0772	20.5044	21.3588
178	.8056	.2328	.6599	.0871	.5143	.9415	.3687	.7958	.2230	.6502	.0774	.5045	.3589
181	.8057	.2329	.6601	.0872	.5144	.9416	.3688	.7960	.2231	.6503	.0775	.5047	.3591
184	.8058	.2330	.6602	.0874	.5145	.9417	.3689	.7961	.2233	.6505	.0776	.5048	.3592
187	.8059	.2331	.6603	.0875	.5147	.9419	.3690	.7962	.2234	.6506	.0778	.5050	.3594
427190	15.8060	16.2332	16.6604	17.0876	17.5148	17.9420	18.3692	18.7964	19.2236	19.6507	20.0779	20.5051	21.3595
193	.8061	.2333	.6605	.0877	.5149	.9421	.3693	.7965	.2237	.6509	.0781	.5053	.3597
196	.8063	.2334	.6606	.0878	.5150	.9422	.3694	.7966	.2238	.6510	.0782	.5054	.3598
199	.8064	.2336	.6608	.0880	.5152	.9424	.3696	.7968	.2240	.6512	.0784	.5056	.3600
202	.8065	.2337	.6609	.0881	.5153	.9425	.3697	.7969	.2241	.6513	.0785	.5057	.3601
427205	15.8066	16.2338	16.6610	17.0882	17.5154	17.9426	18.3698	18.7970	19.2242	19.6514	20.0786	20.5058	21.3603
208	.8067	.2339	.6611	.0883	.5155	.9427	.3699	.7972	.2244	.6516	.0788	.5060	.3604
211	.8068	.2340	.6612	.0884	.5157	.9429	.3701	.7973	.2245	.6517	.0789	.5061	.3606
214	.8069	.2341	.6613	.0886	.5158	.9430	.3702	.7974	.2246	.6518	.0791	.5063	.3607
217	.8070	.2342	.6615	.0887	.5159	.9431	.3703	.7975	.2248	.6520	.0792	.5064	.3609
427220	15.8071	16.2344	16.6616	17.0888	17.5160	17.9432	18.3705	18.7977	19.2249	19.6521	20.0793	20.5066	21.3610
223	.8073	.2345	.6617	.0889	.5161	.9434	.3706	.7978	.2250	.6523	.0795	.5067	.3612
226	.8074	.2346	.6618	.0890	.5163	.9435	.3707	.7979	.2252	.6524	.0796	.5068	.3613
229	.8075	.2347	.6619	.0892	.5164	.9436	.3708	.7981	.2253	.6525	.0798	.5070	.3615
232	.8076	.2348	.6620	.0893	.5165	.9437	.3710	.7982	.2254	.6527	.0799	.5071	.3616
427235	15.8077	16.2349	16.6622	17.0894	17.5166	17.9439	18.3711	18.7983	19.2256	19.6528	20.0800	20.5073	21.3618
238	.8078	.2350	.6623	.0895	.5168	.9440	.3712	.7985	.2257	.6529	.0802	.5074	.3619
241	.8079	.2352	.6624	.0896	.5169	.9441	.3714	.7986	.2258	.6531	.0803	.5076	.3621
244	.8080	.2353	.6625	.0898	.5170	.9442	.3715	.7987	.2260	.6532	.0805	.5077	.3622
247	.8081	.2354	.6626	.0899	.5171	.9444	.3716	.7989	.2261	.6534	.0806	.5079	.3624
427250	15.8083	16.2355	16.6628	17.0900	17.5173	17.9445	18.3718	18.7990	19.2263	19.6535	20.0808	20.5080	21.3625
253	.8084	.2356	.6629	.0901	.5174	.9446	.3719	.7991	.2264	.6536	.0809	.5081	.3627
256	.8085	.2357	.6630	.0902	.5175	.9448	.3720	.7993	.2265	.6538	.0810	.5083	.3628
259	.8086	.2358	.6631	.0904	.5176	.9449	.3721	.7994	.2267	.6539	.0812	.5084	.3630
262	.8087	.2360	.6632	.0905	.5177	.9450	.3723	.7995	.2268	.6541	.0813	.5086	.3631
427265	15.8088	16.2361	16.6633	17.0906	17.5179	17.9451	18.3724	18.7997	19.2269	19.6542	20.0815	20.5087	21.3633
268	.8089	.2362	.6635	.0907	.5180	.9453	.3725	.7998	.2271	.6543	.0816	.5089	.3634
271	.8090	.2363	.6636	.0908	.5181	.9454	.3727	.7999	.2272	.6545	.0817	.5090	.3636
274	.8091	.2364	.6637	.0910	.5182	.9455	.3728	.8001	.2273	.6546	.0819	.5092	.3637
277	.8092	.2365	.6638	.0911	.5184	.9456	.3729	.8002	.2275	.6547	.0820	.5093	.3639
427280	15.8094	16.2366	16.6639	17.0912	17.5185	17.9458	18.3730	18.8003	19.2276	19.6549	20.0822	20.5094	21.3640
283	.8095	.2368	.6640	.0913	.5186	.9459	.3732	.8005	.2277	.6550	.0823	.5096	.3642
286	.8096	.2369	.6642	.0914	.5187	.9460	.3733	.8006	.2279	.6552	.0824	.5097	.3643
289	.8097	.2370	.6643	.0916	.5188	.9461	.3734	.8007	.2280	.6553	.0826	.5099	.3645
292	.8098	.2371	.6644	.0917	.5190	.9463	.3736	.8008	.2281	.6554	.0827	.5100	.3646
427295	15.8099	16.2372	16.6645	17.0918	17.5191	17.9464	18.3737	18.8010	19.2283	19.6556	20.0829	20.5102	21.3648
298	.8100	.2373	.6646	.0919	.5192	.9465	.3738	.8011	.2284	.6557	.0830	.5103	.3649
301	.8101	.2374	.6647	.0920	.5193	.9466	.3739	.8012	.2285	.6558	.0831	.5104	.3651
304	.8102	.2376	.6649	.0922	.5195	.9468	.3741	.8014	.2287	.6560	.0833	.5106	.3652
307	.8104	.2377	.6650	.0923	.5196	.9469	.3742	.8015	.2288	.6561	.0834	.5107	.3654
427310	15.8105	16.2378	16.6651	17.0924	17.5197	17.9470	18.3743	18.8016	19.2290	19.6563	20.0836	20.5109	21.3655
313	.8106	.2379	.6652	.0925	.5198	.9471	.3745	.8018	.2291	.6564	.0837	.5110	.3657
316	.8107	.2380	.6653	.0926	.5200	.9473	.3746	.8019	.2292	.6565	.0839	.5112	.3658
319	.8108	.2381	.6654	.0928	.5201	.9474	.3747	.8020	.2294	.6567	.0840	.5113	.3660
322	.8109	.2382	.6656	.0929	.5202	.9475	.3748	.8022	.2295	.6568	.0841	.5115	.3661
427325	15.8110	16.2384	16.6657	17.0930	17.5203	17.9477	18.3750	18.8023	19.2296	19.6570	20.0843	20.5116	21.3663
328	.8111	.2385	.6658	.0931	.5204	.9478	.3751	.8024	.2298	.6571	.0844	.5117	.3664
331	.8112	.2386	.6659	.0932	.5206	.9479	.3742	.8026	.2299	.6572	.0846	.5119	.3666
334	.8114	.2387	.6660	.0934	.5207	.9480	.3754	.8027	.2300	.6574	.0847	.5120	.3667
337	.8115	.2388	.6661	.0935	.5208	.9482	.3755	.8028	.2302	.6575	.0848	.5122	.3669
427340	15.8116	16.2389	16.6663	17.0936	17.5209	17.9483	18.3756	18.8030	19.2303	19.6576	20.0850	20.5123	21.3670
343	.8117	.2390	.6664	.0937	.5211	.9484	.3757	.8031	.2304	.6578	.0851	.5125	.3672
346	.8118	.2391	.6665	.0938	.5212	.9485	.3759	.8032	.2306	.6579	.0853	.5126	.3673
349	.8119	.2393	.6666	.0940	.5213	.9487	.3760	.8034	.2307	.6581	.0854	.5128	.3675
352	.8120	.2394	.6667	.0941	.5214	.9488	.3761	.8035	.2308	.6582	.0855	.5129	.3676
427355	15.8121	16.2395	16.6668	17.0942	17.5216	17.9489	18.3763	18.8036	19.2310	19.6583	20.0857	20.5130	21.3678
358	.8122	.2396	.6670	.0943	.5217	.9490	.3764	.8038	.2311	.6585	.0858	.5132	.3679
361	.8124	.2397	.6671	.0944	.5218	.9492	.3765	.8039	.2312	.6586	.0860	.5133	.3681
364	.8125	.2398	.6672	.0946	.5219	.9493	.3767	.8040	.2314	.6587	.0861	.5135	.3682
367	.8126	.2399	.6673	.0947	.5220	.9494	.3768	.8041	.2315	.6589	.0862	.5136	.3684
427370	15.8127	16.2401	16.6674	17.0948	17.5222	17.9495	18.3769	18.8043	19.2317	19.6590	20.0864	20.5138	21.3685
373	.8128	.2402	.6675	.0949	.5223	.9497	.3770	.8044	.2318	.6592	.0865	.5139	.3687
376	.8129	.2403	.6677	.0950	.5224	.9498	.3772	.8045	.2319	.6593	.0867	.5140	.3688
379	.8130	.2404	.6678	.0952	.5225	.9499	.3773	.8047	.2321	.6594	.0868	.5142	.3690
382	.8131	.2405	.6679	.0953	.5227	.9500	.3774	.8048	.2322	.6596	.0870	.5143	.3691
427385	15.8132	16.2406	16.6680	17.0954	17.5228	17.9502	18.3776	18.8049	19.2323	19.6597	20.0871	20.5145	21.3693
388	.8134	.2407	.6681	.0955	.5229	.9503	.3777	.8051	.2325	.6598	.0872	.5146	.3694
391	.8135	.2409	.6682	.0956	.5230	.9504	.3778	.8052	.2326	.6600	.0874	.5148	.3696
394	.8136	.2410	.6684	.0958	.5232	.9505	.3779	.8053	.2327	.6601	.0875	.5149	.3697
397	.8137	.2411	.6685	.0959	.5233	.9507	.3781	.8055	.2329	.6603	.0877	.5151	.3699
427400	15.8138	16.2412	16.6686	17.0960	17.5234	17.9508	18.3782	18.8056	19.2330	19.6604	20.0878	20.5152	21.3700

MEGACYCLES PER SECOND

HARMONICS

BASIC FREQ.	24	25	26	27	28	29	30	31	32	33	34	35	36
427400	10.2576	10.6850	11.1124	11.5398	11.9672	12.3946	12.8220	13.2494	13.6768	14.1042	14.5316	14.9590	15.3864
403	.2577	.6851	.1125	.5399	.9673	.3947	.8221	.2495	.6769	.1043	.5317	.9591	.3865
406	.2577	.6852	.1126	.5400	.9674	.3948	.8222	.2496	.6770	.1044	.5318	.9592	.3866
409	.2578	.6852	.1126	.5400	.9675	.3949	.8223	.2497	.6771	.1045	.5319	.9593	.3867
412	.2579	.6853	.1127	.5401	.9675	.3949	.8224	.2498	.6772	.1046	.5320	.9594	.3868
427415	10.2580	10.6854	11.1128	11.5402	11.9676	12.3950	12.8225	13.2499	13.6773	14.1047	14.5321	14.9595	15.3869
418	.2580	.6855	.1129	.5403	.9677	.3951	.8225	.2500	.6774	.1048	.5322	.9596	.3870
421	.2581	.6855	.1129	.5404	.9678	.3952	.8226	.2501	.6775	.1049	.5323	.9597	.3872
424	.2582	.6856	.1130	.5404	.9679	.3953	.8227	.2501	.6776	.1050	.5324	.9598	.3873
427	.2582	.6857	.1131	.5405	.9680	.3954	.8228	.2502	.6777	.1051	.5325	.9599	.3874
427430	10.2583	10.6858	11.1132	11.5406	11.9680	12.3955	12.8229	13.2503	13.6778	14.1052	14.5326	14.9601	15.3875
433	.2584	.6858	.1133	.5407	.9681	.3956	.8230	.2504	.6779	.1053	.5327	.9602	.3876
436	.2585	.6859	.1133	.5408	.9682	.3956	.8231	.2505	.6780	.1054	.5328	.9603	.3877
439	.2585	.6860	.1134	.5409	.9683	.3957	.8232	.2506	.6780	.1055	.5329	.9604	.3878
442	.2586	.6861	.1135	.5409	.9684	.3958	.8233	.2507	.6781	.1056	.5330	.9605	.3879
427445	10.2587	10.6861	11.1136	11.5410	11.9685	12.3959	12.8234	13.2508	13.6782	14.1057	14.5331	14.9606	15.3880
448	.2588	.6862	.1136	.5411	.9685	.3960	.8234	.2509	.6783	.1058	.5332	.9607	.3881
451	.2588	.6863	.1137	.5412	.9686	.3961	.8235	.2510	.6784	.1059	.5333	.9608	.3882
454	.2589	.6864	.1138	.5413	.9687	.3962	.8236	.2511	.6785	.1060	.5334	.9609	.3883
457	.2590	.6864	.1139	.5413	.9688	.3963	.8237	.2512	.6786	.1061	.5335	.9610	.3885
427460	10.2590	10.6865	11.1140	11.5414	11.9689	12.3963	12.8238	13.2513	13.6787	14.1062	14.5336	14.9611	15.3886
463	.2591	.6866	.1140	.5415	.9690	.3964	.8239	.2514	.6788	.1063	.5337	.9612	.3887
466	.2592	.6867	.1141	.5416	.9690	.3965	.8240	.2514	.6789	.1064	.5338	.9613	.3888
469	.2593	.6867	.1142	.5417	.9691	.3966	.8241	.2515	.6790	.1065	.5339	.9614	.3889
472	.2593	.6868	.1143	.5417	.9692	.3967	.8242	.2516	.6791	.1066	.5340	.9615	.3890
427475	10.2594	10.6869	11.1144	11.5418	11.9693	12.3968	12.8243	13.2517	13.6792	14.1067	14.5342	14.9616	15.3891
478	.2595	.6870	.1144	.5419	.9694	.3969	.8243	.2518	.6793	.1068	.5343	.9617	.3892
481	.2595	.6870	.1145	.5420	.9695	.3969	.8244	.2519	.6794	.1069	.5344	.9618	.3893
484	.2596	.6871	.1146	.5421	.9696	.3970	.8245	.2520	.6795	.1070	.5345	.9619	.3894
487	.2597	.6872	.1147	.5421	.9696	.3971	.8246	.2521	.6796	.1071	.5346	.9620	.3895
427490	10.2598	10.6873	11.1147	11.5422	11.9697	12.3972	12.8247	13.2522	13.6797	14.1072	14.5347	14.9622	15.3896
493	.2598	.6873	.1148	.5423	.9698	.3973	.8248	.2523	.6798	.1073	.5348	.9623	.3897
496	.2599	.6874	.1149	.5424	.9699	.3974	.8249	.2524	.6799	.1074	.5349	.9624	.3899
499	.2600	.6875	.1150	.5425	.9700	.3975	.8250	.2525	.6800	.1075	.5350	.9625	.3900
502	.2600	.6876	.1151	.5426	.9701	.3976	.8251	.2526	.6801	.1076	.5351	.9626	.3901
427505	10.2601	10.6876	11.1151	11.5426	11.9701	12.3976	12.8252	13.2527	13.6802	14.1077	14.5352	14.9627	15.3902
508	.2602	.6877	.1152	.5427	.9702	.3977	.8252	.2527	.6803	.1078	.5353	.9628	.3903
511	.2603	.6878	.1153	.5428	.9703	.3978	.8253	.2528	.6804	.1079	.5354	.9629	.3904
514	.2603	.6879	.1154	.5429	.9704	.3979	.8254	.2529	.6804	.1080	.5355	.9630	.3905
517	.2604	.6879	.1154	.5430	.9705	.3980	.8255	.2530	.6805	.1081	.5356	.9631	.3906
427520	10.2605	10.6880	11.1155	11.5430	11.9706	12.3981	12.8256	13.2531	13.6806	14.1082	14.5357	14.9632	15.3907
523	.2606	.6881	.1156	.5431	.9706	.3982	.8257	.2532	.6807	.1083	.5358	.9633	.3908
526	.2606	.6882	.1157	.5432	.9707	.3983	.8258	.2533	.6808	.1084	.5359	.9634	.3909
529	.2607	.6882	.1158	.5433	.9708	.3983	.8259	.2534	.6809	.1085	.5360	.9635	.3910
532	.2608	.6883	.1158	.5434	.9709	.3984	.8260	.2535	.6810	.1086	.5361	.9636	.3912
427535	10.2608	10.6884	11.1159	11.5434	11.9710	12.3985	12.8261	13.2536	13.6811	14.1087	14.5362	14.9637	15.3913
538	.2609	.6885	.1160	.5435	.9711	.3986	.8261	.2537	.6812	.1088	.5363	.9638	.3914
541	.2610	.6885	.1161	.5436	.9711	.3987	.8262	.2538	.6813	.1089	.5364	.9639	.3915
544	.2611	.6886	.1161	.5437	.9712	.3988	.8263	.2539	.6814	.1090	.5365	.9640	.3916
547	.2611	.6887	.1162	.5438	.9713	.3989	.8264	.2540	.6815	.1091	.5366	.9641	.3917
427550	10.2612	10.6888	11.1163	11.5439	11.9714	12.3990	12.8265	13.2541	13.6816	14.1092	14.5367	14.9643	15.3918
553	.2613	.6888	.1164	.5439	.9715	.3990	.8266	.2541	.6817	.1092	.5368	.9644	.3919
556	.2613	.6889	.1165	.5440	.9716	.3991	.8267	.2542	.6818	.1093	.5369	.9645	.3920
559	.2614	.6890	.1165	.5441	.9717	.3992	.8268	.2543	.6819	.1094	.5370	.9646	.3921
562	.2615	.6891	.1166	.5442	.9717	.3993	.8269	.2544	.6820	.1095	.5371	.9647	.3922
427565	10.2616	10.6891	11.1167	11.5443	11.9718	12.3994	12.8270	13.2545	13.6821	14.1096	14.5372	14.9648	15.3923
568	.2616	.6892	.1168	.5443	.9719	.3995	.8270	.2546	.6822	.1097	.5373	.9649	.3924
571	.2617	.6893	.1168	.5444	.9720	.3996	.8271	.2547	.6823	.1098	.5374	.9650	.3926
574	.2618	.6894	.1169	.5445	.9721	.3996	.8272	.2548	.6824	.1099	.5375	.9651	.3927
577	.2618	.6894	.1170	.5446	.9722	.3997	.8273	.2549	.6825	.1100	.5376	.9652	.3928
427580	10.2619	10.6895	11.1171	11.5447	11.9722	12.3998	12.8274	13.2550	13.6826	14.1101	14.5377	14.9653	15.3929
583	.2620	.6896	.1172	.5447	.9723	.3999	.8275	.2551	.6827	.1102	.5378	.9654	.3930
586	.2621	.6897	.1172	.5448	.9724	.4000	.8276	.2552	.6828	.1103	.5379	.9655	.3931
589	.2621	.6897	.1173	.5449	.9725	.4001	.8277	.2553	.6828	.1104	.5380	.9656	.3932
592	.2622	.6898	.1174	.5450	.9726	.4002	.8278	.2554	.6829	.1105	.5381	.9657	.3933
427595	10.2623	10.6899	11.1175	11.5451	11.9727	12.4003	12.8279	13.2554	13.6830	14.1106	14.5382	14.9658	15.3934
598	.2624	.6900	.1175	.5451	.9727	.4003	.8279	.2555	.6831	.1107	.5383	.9659	.3935
601	.2624	.6900	.1176	.5452	.9728	.4004	.8280	.2556	.6832	.1108	.5384	.9660	.3936
604	.2625	.6901	.1177	.5453	.9729	.4005	.8281	.2557	.6833	.1109	.5385	.9661	.3937
607	.2626	.6902	.1178	.5454	.9730	.4006	.8282	.2558	.6834	.1110	.5386	.9662	.3939
427610	10.2626	10.6903	11.1179	11.5455	11.9731	12.4007	12.8283	13.2559	13.6835	14.1111	14.5387	14.9664	15.3940
613	.2627	.6903	.1179	.5456	.9732	.4008	.8284	.2560	.6836	.1112	.5388	.9665	.3941
616	.2628	.6904	.1180	.5456	.9732	.4009	.8285	.2561	.6837	.1113	.5389	.9666	.3942
619	.2629	.6905	.1181	.5457	.9733	.4010	.8286	.2562	.6838	.1114	.5390	.9667	.3943
622	.2629	.6906	.1182	.5458	.9734	.4010	.8287	.2563	.6839	.1115	.5391	.9668	.3944
427625	10.2630	10.6906	11.1183	11.5459	11.9735	12.4011	12.8288	13.2564	13.6840	14.1116	14.5393	14.9669	15.3945
628	.2631	.6907	.1183	.5460	.9736	.4012	.8288	.2565	.6841	.1117	.5394	.9670	.3946
631	.2631	.6908	.1184	.5460	.9737	.4013	.8289	.2566	.6842	.1118	.5395	.9671	.3947
634	.2632	.6909	.1185	.5461	.9738	.4014	.8290	.2567	.6843	.1119	.5396	.9672	.3948
637	.2633	.6909	.1186	.5462	.9738	.4015	.8291	.2567	.6844	.1120	.5397	.9673	.3949
427640	10.2634	10.6910	11.1186	11.5463	11.9739	12.4016	12.8292	13.2568	13.6845	14.1121	14.5398	14.9674	15.3950
643	.2634	.6911	.1187	.5464	.9740	.4016	.8293	.2569	.6846	.1122	.5399	.9675	.3951
646	.2635	.6912	.1188	.5464	.9741	.4017	.8294	.2570	.6847	.1123	.5400	.9676	.3953
649	.2636	.6912	.1189	.5465	.9742	.4018	.8295	.2571	.6848	.1124	.5401	.9677	.3954
652	.2636	.6913	.1190	.5466	.9743	.4019	.8296	.2572	.6849	.1125	.5402	.9678	.3955
427655	10.2637	10.6914	11.1190	11.5467	11.9743	12.4020	12.8297	13.2573	13.6850	11.1126	14.5403	14.9679	15.3956
658	.2638	.6915	.1191	.5468	.9744	.4021	.8297	.2574	.6851	.1127	.5404	.9680	.3957
661	.2639	.6915	.1192	.5468	.9745	.4022	.8298	.2575	.6852	.1128	.5405	.9681	.3958
664	.2639	.6916	.1193	.5469	.9746	.4023	.8299	.2576	.6852	.1129	.5406	.9682	.3959
667	.2640	.6917	.1193	.5470	.9747	.4023	.8300	.2577	.6853	.1130	.5407	.9683	.3960
427670	10.2641	10.6918	11.1194	11.5471	11.9748	12.4024	12.8301	13.2578	13.6854	14.1131	14.5408	14.9685	15.3961
673	.2642	.6918	.1195	.5472	.9748	.4025	.8302	.2579	.6855	.1132	.5409	.9686	.3962
676	.2642	.6919	.1196	.5473	.9749	.4026	.8303	.2580	.6856	.1133	.5410	.9687	.3963
679	.2643	.6920	.1197	.5473	.9750	.4027	.8304	.2580	.6857	.1134	.5411	.9688	.3964
682	.2644	.6921	.1197	.5474	.9751	.4028	.8305	.2581	.6858	.1135	.5412	.9689	.3966
427685	10.2644	10.6921	11.1198	11.5475	11.9752	12.4029	12.8306	13.2582	13.6859	14.1136	14.5413	14.9690	15.3967
688	.2645	.6922	.1199	.5476	.9753	.4030	.8306	.2583	.6860	.1137	.5414	.9691	.3968
691	.2646	.6923	.1200	.5477	.9753	.4030	.8307	.2584	.6861	.1138	.5415	.9692	.3969
694	.2647	.6924	.1200	.5477	.9754	.4031	.8308	.2585	.6862	.1139	.5416	.9693	.3970
697	.2647	.6924	.1201	.5478	.9755	.4032	.8309	.2586	.6863	.1140	.5417	.9694	.3971
427700	10.2648	10.6925	11.1202	11.5479	11.9756	12.4033	12.8310	13.2587	13.6864	14.1141	14.5418	14.9695	15.3972

MEGACYCLES PER SECOND

L

HARMONICS

BASIC FREQ.	37	38	39	40	41	42	43	44	45	46	47	48	50
427400	15.8138	16.2412	16.6686	17.0960	17.5234	17.9508	18.3782	18.8056	19.2330	19.6604	20.0878	20.5152	21.3700
403	.8139	.2413	.6687	.0961	.5235	.9509	.3783	.8057	.2331	.6605	.0879	.5153	.3702
406	.8140	.2414	.6688	.0962	.5236	.9511	.3785	.8059	.2333	.6607	.0881	.5155	.3703
409	.8141	.2415	.6690	.0964	.5238	.9512	.3786	.8060	.2334	.6608	.0882	.5156	.3705
412	.8142	.2417	.6691	.0965	.5239	.9513	.3787	.8061	.2335	.6610	.0884	.5158	.3706
427415	15.8144	16.2418	16.6692	17.0966	17.5240	17.9514	18.3788	18.8063	19.2337	19.6611	20.0885	20.5159	21.3708
418	.8145	.2419	.6693	.0967	.5241	.9516	.3790	.8064	.2338	.6612	.0886	.5161	.3709
421	.8146	.2420	.6694	.0968	.5243	.9517	.3791	.8065	.2339	.6614	.0888	.5162	.3711
424	.8147	.2421	.6695	.0970	.5244	.9518	.3792	.8067	.2341	.6615	.0889	.5164	.3712
427	.8148	.2422	.6697	.0971	.5245	.9519	.3794	.8068	.3442	.6616	.0891	.5165	.3714
427430	15.8149	16.2423	16.6698	17.0972	17.5246	17.9521	18.3795	18.8069	19.2344	19.6618	20.0892	20.5166	21.3715
433	.8150	.2425	.6699	.0973	.5248	.9522	.3796	.8071	.2345	.6619	.0894	.5168	.3717
436	.8151	.2426	.6700	.0974	.5249	.9523	.3797	.8072	.2346	.6621	.0895	.5169	.3718
439	.8152	.2427	.6701	.0976	.5250	.9524	.3799	.8073	.2348	.6622	.0896	.5171	.3720
442	.8154	.2428	.6702	.0977	.5251	.9526	.3800	.8074	.2349	.6623	.0898	.5172	.3721
427445	15.8155	16.2429	16.6704	17.0978	17.5252	17.9527	18.3801	18.8076	19.2350	19.6625	20.0899	20.5174	21.3723
448	.8156	.2430	.6705	.0979	.5254	.9528	.3803	.8077	.2352	.6626	.0901	.5175	.3724
451	.8157	.2431	.6706	.0980	.5255	.9529	.3804	.8078	.2353	.6627	.0902	.5176	.3726
454	.8158	.2433	.6707	.0982	.5256	.9531	.3805	.8080	.2354	.6629	.0903	.5178	.3727
457	.8159	.2434	.6708	.0983	.5257	.9532	.3807	.8081	.2356	.6630	.0905	.5179	.3729
427460	15.8160	16.2435	16.6709	17.0984	17.5259	17.9533	18.3808	18.8082	19.2357	19.6632	20.0906	20.5181	21.3730
463	.8161	.2436	.6711	.0985	.5260	.9534	.3809	.8084	.2358	.6633	.0908	.5182	.3732
466	.8162	.2437	.6712	.0986	.5261	.9536	.3810	.8085	.2360	.6634	.0909	.5184	.3733
469	.8164	.2438	.6713	.0988	.5262	.9537	.3812	.8086	.2361	.6636	.0910	.5185	.3735
472	.8165	.2439	.6714	.0989	.5264	.9538	.3813	.8088	.2362	.6637	.0912	.5187	.3736
427475	15.8166	16.2441	16.6715	17.0990	17.5265	17.9540	18.3814	18.8089	19.2364	19.6639	20.0913	20.5188	21.3738
478	.8167	.2442	.6716	.0991	.5266	.9541	.3816	.8090	.2365	.6640	.0915	.5189	.3739
481	.8168	.2443	.6718	.0992	.5267	.9542	.3817	.8092	.2366	.6641	.0916	.5191	.3741
484	.8169	.2444	.6719	.0994	.5268	.9543	.3818	.8093	.2368	.6643	.0917	.5192	.3742
487	.8170	.2445	.6720	.0995	.5270	.9545	.3819	.8094	.2369	.6644	.0919	.5194	.3744
427490	15.8171	16.2446	16.6721	17.0996	17.5271	17.9546	18.3821	18.8096	19.2371	19.6645	20.0920	20.5195	21.3745
493	.8172	.2447	.6722	.0997	.5272	.9547	.3822	.8097	.2372	.6647	.0922	.5197	.3747
496	.8174	.2448	.6723	.0998	.5273	.9548	.3823	.8098	.2373	.6648	.0923	.5198	.3748
499	.8175	.2450	.6725	.1000	.5275	.9550	.3825	.8100	.2375	.6650	.0925	.5200	.3750
502	.8176	.2451	.6726	.1001	.5276	.9551	.3826	.8101	.2376	.6651	.0926	.5201	.3751
427505	15.8177	16.2452	16.6727	17.1002	17.5277	17.9552	18.3827	18.8102	19.2377	19.6652	20.0927	20.5202	21.3753
508	.8178	.2453	.6728	.1003	.5278	.9553	.3828	.8104	.2379	.6654	.0929	.5204	.3754
511	.8179	.2454	.6729	.1004	.5280	.9555	.3830	.8105	.2380	.6655	.0930	.5205	.3756
514	.8180	.2455	.6730	.1006	.5281	.9556	.3831	.8106	.2381	.6656	.0932	.5207	.3757
517	.8181	.2456	.6732	.1007	.5282	.9557	.3832	.8107	.2383	.6658	.0933	.5208	.3759
427520	15.8182	16.2458	16.6733	17.1008	17.5283	17.9558	18.3834	18.8109	19.2384	19.6659	20.0934	20.5210	21.3760
523	.8184	.2459	.6734	.1009	.5284	.9560	.3835	.8110	.2385	.6661	.0936	.5211	.3762
526	.8185	.2460	.6735	.1010	.5286	.9561	.3836	.8111	.2387	.6662	.0937	.5212	.3763
529	.8186	.2461	.6736	.1012	.5287	.9562	.3837	.8113	.2388	.6663	.0939	.5214	.3765
532	.8187	.2462	.6737	.1013	.5288	.9563	.3839	.8114	.2389	.6665	.0940	.5215	.3766
427535	15.8188	16.2463	16.6739	17.1014	17.5289	17.9565	18.3840	18.8115	19.2391	19.6666	20.0941	20.5217	21.3768
538	.8189	.2464	.6740	.1015	.5291	.9566	.3841	.8117	.2392	.6667	.0943	.5218	.3769
541	.8190	.2466	.6741	.1016	.5292	.9567	.3843	.8118	.2393	.6669	.0944	.5220	.3771
544	.8191	.2467	.6742	.1018	.5293	.9568	.3844	.8119	.2395	.6670	.0946	.5221	.3772
547	.8192	.2468	.6743	.1019	.5294	.9570	.3845	.8121	.2396	.6672	.0947	.5223	.3774
427550	15.8194	16.2469	16.6745	17.1020	17.5296	17.9571	18.3847	18.8122	19.2398	19.6673	20.0949	20.5224	21.3775
553	.8195	.2470	.6746	.1021	.5297	.9572	.3848	.8123	.2399	.6674	.0950	.5225	.3777
556	.8196	.2471	.6747	.1022	.5298	.9574	.3849	.8125	.2400	.6676	.0951	.5227	.3778
559	.8197	.2472	.6748	.1024	.5299	.9575	.3850	.8126	.2402	.6677	.0953	.5228	.3780
562	.8198	.2474	.6749	.1025	.5300	.9576	.3852	.8127	.2403	.6679	.0954	.5230	.3781
427565	15.8199	16.2475	16.6750	17.1026	17.5302	17.9577	18.3853	18.8129	19.2404	19.6680	20.0956	20.5231	21.3783
568	.8200	.2476	.6752	.1027	.5303	.9579	.3854	.8130	.2406	.6681	.0957	.5233	.3784
571	.8201	.2477	.6753	.1028	.5304	.9580	.3856	.8131	.2407	.6683	.0958	.5234	.3786
574	.8202	.2478	.6754	.1030	.5305	.9581	.3857	.8133	.2408	.6684	.0960	.5236	.3787
577	.8203	.2479	.6755	.1031	.5307	.9582	.3858	.8134	.2410	.6685	.0961	.5237	.3789
427580	15.8205	16.2480	16.6756	17.1032	17.5308	17.9584	18.3859	18.8135	19.2411	19.6687	20.0963	20.5238	21.3790
583	.8206	.2482	.6757	.1033	.5309	.9585	.3861	.8137	.2412	.6688	.0964	.5240	.3792
586	.8207	.2483	.6759	.1034	.5310	.9586	.3862	.8138	.2414	.6690	.0965	.5241	.3793
589	.8208	.2484	.6760	.1036	.5311	.9587	.3863	.8139	.2415	.6691	.0967	.5243	.3795
592	.8209	.2485	.6761	.1037	.5313	.9589	.3865	.8140	.2416	.6692	.0968	.5244	.3796
427595	15.8210	16.2486	16.6762	17.1038	17.5314	17.9590	18.3866	18.8142	19.2418	19.6694	20.0970	20.5246	21.3798
598	.8211	.2487	.6763	.1039	.5315	.9591	.3867	.8143	.2419	.6695	.0971	.5247	.3799
601	.8212	.2488	.6764	.1040	.5316	.9592	.3868	.8144	.2420	.6696	.0972	.5248	.3801
604	.8213	.2490	.6766	.1042	.5318	.9594	.3870	.8146	.2422	.6698	.0974	.5250	.3802
607	.8215	.2491	.6767	.1043	.5319	.9595	.3871	.8147	.2423	.6699	.0975	.5251	.3804
427610	15.8216	16.2492	17.6768	17.1044	17.5320	17.9596	18.3872	18.8148	19.2425	19.6701	20.0977	20.5253	21.3805
613	.8217	.2493	.6769	.1045	.5321	.9597	.3874	.8150	.2426	.6702	.0978	.5254	.3807
616	.8218	.2494	.6770	.1046	.5323	.9599	.3875	.8151	.2427	.6703	.0980	.5256	.3808
619	.8219	.2495	.6771	.1048	.5324	.9600	.3876	.8152	.2429	.6705	.0981	.5257	.3810
622	.8220	.2496	.6773	.1049	.5325	.9601	.3877	.8154	.2430	.6706	.0982	.5259	.3811
427625	15.8221	16.2498	16.6774	17.1050	17.5326	17.9603	18.3879	18.8155	19.2431	19.6708	20.0984	20.5260	21.3813
628	.8222	.2499	.6775	.1051	.5327	.9604	.3880	.8156	.2433	.6709	.0985	.5261	.3814
631	.8223	.2500	.6776	.1052	.5329	.9605	.3881	.8158	.2434	.6710	.0987	.5263	.3816
634	.8225	.2501	.6777	.1054	.5330	.9606	.3883	.8159	.2435	.6712	.0988	.5264	.3817
637	.8226	.2502	.6778	.1055	.5331	.9608	.3884	.8160	.2437	.1673	.0989	.5266	.3819
427640	15.8227	16.2503	16.6780	17.1056	17.5332	17.9609	18.3885	18.8162	19.2438	19.6714	20.0991	20.5267	21.3820
643	.8228	.2504	.6781	.1057	.5334	.9610	.3886	.8163	.2439	.6716	.0992	.5269	.3822
646	.8229	.2505	.6782	.1058	.5335	.9611	.3888	.8164	.2441	.6717	.0994	.5270	.3823
649	.8230	.2507	.6783	.1060	.5336	.9613	.3889	.8166	.2442	.6719	.0995	.5272	.3825
652	.8231	.2508	.6784	.1061	.5337	.9614	.3890	.8167	.2443	.6720	.0998	.5273	.3826
427655	15.8232	16.2509	16.6785	17.1062	17.5339	17.9615	18.3892	18.8168	19.2445	19.6721	20.0998	20.5274	21.3828
658	.8233	.2510	.6787	.1063	.5340	.9616	.3893	.8170	.2446	.6723	.0999	.5276	.3829
661	.8235	.2511	.6788	.1064	.5341	.9618	.3894	.8171	.2447	.6724	.1001	.5277	.3831
664	.8236	.2512	.6789	.1066	.5342	.9619	.3896	.8172	.2449	.6725	.1002	.5279	.3832
667	.8237	.2513	.6790	.1067	.5343	.9620	.3897	.8173	.2450	.6727	.1003	.5280	.3834
427670	15.8238	16.2515	16.6791	17.1068	17.5345	17.9621	18.3898	18.8175	19.2452	19.6728	20.1005	20.5282	21.3835
673	.8239	.2516	.6792	.1069	.5346	.9623	.3899	.8176	.2453	.6730	.1006	.5283	.3837
676	.8240	.2517	.6794	.1070	.5247	.9624	.3901	.8177	.2454	.6731	.1008	.5284	.3838
679	.8241	.2518	.6795	.1072	.5348	.9625	.3902	.8179	.2456	.6732	.1009	.5286	.3840
682	.8242	.2519	.6796	.1073	.5350	.9626	.3903	.8180	.2457	.6734	.1011	.5287	.3841
427685	15.8243	16.2520	16.6797	17.1074	17.5351	17.9628	18.3905	18.8181	19.2458	19.6735	20.1012	20.5289	21.3843
688	.8245	.2521	.6798	.1075	.5352	.9629	.3906	.8183	.2460	.6736	.1013	.5290	.3844
691	.8246	.2523	.6799	.1076	.5353	.9630	.3907	.8184	.2461	.6738	.1015	.5292	.3846
694	.8247	.2524	.6801	.1078	.5355	.9631	.3908	.8185	.2462	.6739	.1016	.5293	.3847
697	.8248	.2525	.6802	.1079	.5356	.9633	.3910	.8187	.2464	.6741	.1018	.5295	.3849
427700	15.8249	16.2526	16.6803	17.1080	17.5357	17.9634	18.3911	18.8188	19.2465	19.6742	20.1019	20.5296	21.3850

HARMONICS

BASIC FREQ.	24	25	26	27	28	29	30	31	32	33	34	35	36
427700	10.2648	10.6925	11.1202	11.5479	11.9756	12.4033	12.8310	13.2587	13.6864	14.1141	14.5418	14.9695	15.3972
703	.2649	.6926	.1203	.5480	.9757	.4034	.8311	.2588	.6865	.1142	.5419	.9696	.3973
706	.2649	.6927	.1204	.5481	.9758	.4035	.8312	.2589	.6866	.1143	.5420	.9697	.3974
709	.2650	.6927	.1204	.5481	.9759	.4036	.8313	.2590	.6867	.1144	.5421	.9698	.3975
712	.2651	.6928	.1205	.5482	.9759	.4036	.8314	.2591	.6868	.1145	.5422	.9699	.3976
427715	10.2652	10.6929	11.1206	11.5483	11.9760	12.4037	12.8315	13.2592	13.6869	14.1146	14.5423	14.9700	15.3977
718	.2652	.6930	.1207	.5484	.9761	.4038	.8315	.2593	.6870	.1147	.5424	.9701	.3978
721	.2653	.6930	.1207	.5485	.9762	.4039	.8316	.2594	.6871	.1148	.5425	.9702	.3980
724	.2654	.6931	.1208	.5485	.9763	.4040	.8317	.2594	.6872	.1149	.5426	.9703	.3981
727	.2654	.6932	.1209	.5486	.9764	.4041	.8318	.2595	.6873	.1150	.5427	.9704	.3982
427730	10.2655	10.6933	11.1210	11.5487	11.9764	12.4042	12.8319	13.2596	13.6874	14.1151	14.5428	14.9706	15.3983
733	.2656	.6933	.1211	.5488	.9765	.4043	.8320	.2597	.6875	.1152	.5429	.9707	.3984
736	.2657	.6934	.1211	.5489	.9766	.4043	.8321	.2598	.6876	.1153	.5430	.9708	.3985
739	.2657	.6935	.1212	.5490	.9767	.4044	.8322	.2599	.6876	.1154	.5431	.9709	.3986
742	.2658	.6936	.1213	.5490	.9768	.4045	.8323	.2600	.6877	.1155	.5432	.9710	.3987
427745	10.2659	10.6936	11.1214	11.5491	11.9769	12.4046	12.8324	13.2601	13.6878	14.1156	14.5433	14.9711	15.3988
748	.2660	.6937	.1214	.5492	.9769	.4047	.8324	.2602	.6879	.1157	.5434	.9712	.3989
751	.2660	.6938	.1215	.5493	.9770	.4048	.8325	.2603	.6880	.1158	.5435	.9713	.3990
754	.2661	.6939	.1216	.5494	.9771	.4049	.8326	.2604	.6881	.1159	.5436	.9714	.3991
757	.2662	.6939	.1217	.5494	.9772	.4050	.8327	.2605	.6882	.1160	.5437	.9715	.3993
427760	10.2662	10.6940	11.1218	11.5495	11.9773	12.4050	12.8328	13.2606	13.6883	14.1161	14.5438	14.9716	15.3994
763	.2663	.6941	.1218	.5496	.9774	.4051	.8329	.2607	.6884	.1162	.5439	.9717	.3995
766	.2664	.6942	.1219	.5497	.9774	.4052	.8330	.2607	.6885	.1163	.5440	.9718	.3996
769	.2665	.6942	.1220	.5498	.9775	.4053	.8331	.2608	.6886	.1164	.5441	.9719	.3997
772	.2665	.6943	.1221	.5498	.9776	.4054	.8332	.2609	.6887	.1165	.5442	.9720	.3998
427775	10.2666	10.6944	11.1222	11.5499	11.9777	12.4055	12.8333	13.2610	13.6888	14.1166	14.5444	14.9721	15.3999
778	.2667	.6945	.1222	.5500	.9778	.4056	.8333	.2611	.6889	.1167	.5445	.9722	.4000
781	.2667	.6945	.1223	.5501	.9779	.4056	.8334	.2612	.6890	.1168	.5446	.9723	.4001
784	.2668	.6946	.1224	.5502	.9780	.4057	.8335	.2613	.6891	.1169	.5447	.9724	.4002
787	.2669	.6947	.1225	.5502	.9780	.4058	.8336	.2614	.6892	.1170	.5448	.9725	.4003
427790	10.2670	10.6948	11.1225	11.5503	11.9781	12.4059	12.8337	13.2615	13.6893	14.1171	14.5449	14.9727	15.4004
793	.2670	.6948	.1226	.5504	.9782	.4060	.8338	.2616	.6894	.1172	.5450	.9728	.4005
796	.2671	.6949	.1227	.5505	.9783	.4061	.8339	.2617	.6895	.1173	.5451	.9729	.4007
799	.2672	.6950	.1228	.5506	.9784	.4062	.8340	.2618	.6896	.1174	.5452	.9730	.4008
802	.2672	.6951	.1229	.5507	.9785	.4063	.8341	.2619	.6897	.1175	.5453	.9731	.4009
427805	10.2673	10.6951	11.1229	11.5507	11.9785	12.4063	12.8342	13.2620	13.6898	14.1176	14.5454	14.9732	15.4010
808	.2674	.6952	.1230	.5508	.9786	.4064	.8342	.2620	.6899	.1177	.5455	.9733	.4011
811	.2675	.6953	.1231	.5509	.9787	.4065	.8343	.2621	.6900	.1178	.5456	.9734	.4012
814	.2675	.6954	.1232	.5510	.9788	.4066	.8344	.2622	.6900	.1179	.5457	.9735	.4013
817	.2676	.6954	.1232	.5511	.9789	.4067	.8345	.2623	.6901	.1180	.5458	.9736	.4014
427820	10.2677	10.6955	11.1233	11.5511	11.9790	12.4068	12.8346	13.2624	13.6902	14.1181	14.5459	14.9737	15.4015
823	.2678	.6956	.1234	.5512	.9790	.4069	.8347	.2625	.6903	.1182	.5460	.9738	.4016
826	.2678	.6957	.1235	.5513	.9791	.4070	.8348	.2626	.6904	.1183	.5461	.9739	.4017
829	.2679	.6957	.1236	.5514	.9792	.4070	.8349	.2627	.6905	.1184	.5462	.9740	.4018
832	.2680	.6958	.1236	.5515	.9793	.4071	.8350	.2628	.6906	.1185	.5463	.9741	.4020
427835	10.2680	10.6959	11.1237	11.5515	11.9794	12.4072	12.8351	13.2629	13.6907	14.1186	14.5464	14.9742	15.4021
838	.2681	.6960	.1238	.5516	.9795	.4073	.8351	.2630	.6908	.1187	.5465	.9743	.4022
841	.2682	.6960	.1239	.5517	.9795	.4074	.8352	.2631	.6909	.1188	.5466	.9744	.4023
844	.2683	.6961	.1239	.5518	.9796	.4075	.8353	.2632	.6910	.1189	.5467	.9745	.4024
847	.2683	.6962	.1240	.5519	.9797	.4076	.8354	.2633	.6911	.1190	.5468	.9746	.4025
427850	10.2684	10.6963	11.1241	11.5520	11.9798	12.4077	12.8355	13.2634	13.6912	14.1191	14.5469	14.9748	15.4026
853	.2685	.6963	.1242	.5520	.9799	.4077	.8356	.2634	.6913	.1191	.5470	.9749	.4027
856	.2685	.6964	.1243	.5521	.9800	.4078	.8357	.2635	.6914	.1192	.5471	.9750	.4028
859	.2686	.6965	.1243	.5522	.9801	.4079	.8358	.2636	.6915	.1193	.5472	.9751	.4029
862	.2687	.6966	.1244	.5523	.9801	.4080	.8359	.2637	.6916	.1194	.5473	.9752	.4030
427865	10.2688	10.6966	11.1245	11.5524	11.9802	12.4081	12.8360	13.2638	13.6917	14.1195	14.5474	14.9753	15.4031
868	.2688	.6967	.1246	.5524	.9803	.4082	.8360	.2639	.6918	.1196	.5475	.9754	.4032
871	.2689	.6968	.1246	.5525	.9804	.4083	.8361	.2640	.6919	.1197	.5476	.9755	.4034
874	.2690	.6969	.1247	.5526	.9805	.4083	.8362	.2641	.6920	.1198	.5477	.9756	.4035
877	.2690	.6969	.1248	.5527	.9806	.4084	.8363	.2642	.6921	.1199	.5478	.9757	.4036
427880	10.2691	10.6970	11.1249	11.5528	11.9806	12.4085	12.8364	13.2643	13.6922	14.1200	14.5479	14.9758	15.4037
883	.2692	.6971	.1250	.5528	.9807	.4086	.8365	.2644	.6923	.1201	.5480	.9759	.4038
886	.2693	.6972	.1250	.5529	.9808	.4087	.8366	.2645	.6924	.1202	.5481	.9760	.4039
889	.2693	.6972	.1251	.5530	.9809	.4088	.8367	.2646	.6924	.1203	.5482	.9761	.4040
892	.2694	.6973	.1252	.5531	.9810	.4089	.8368	.2647	.6925	.1204	.5483	.9762	.4041
427895	10.2695	10.6974	11.1253	11.5532	11.9811	12.4090	12.8369	13.2647	13.6926	14.1205	14.5484	14.9763	15.4042
898	.2696	.6975	.1253	.5532	.9811	.4090	.8369	.2648	.6927	.1206	.5485	.9764	.4043
901	.2696	.6975	.1254	.5533	.9812	.4091	.8370	.2649	.6928	.1207	.5486	.9765	.4044
904	.2697	.6976	.1255	.5534	.9813	.4092	.8371	.2650	.6929	.1208	.5487	.9766	.4045
907	.2698	.6977	.1256	.5535	.9814	.4093	.8372	.2651	.6930	.1209	.5488	.9767	.4047
427910	10.2698	10.6978	11.1257	11.5536	11.9815	12.4094	12.8373	13.2652	13.6931	14.1210	14.5489	14.9769	15.4048
913	.2699	.6978	.1257	.5537	.9816	.4095	.8374	.2653	.6932	.1211	.5490	.9770	.4049
916	.2700	.6979	.1258	.5537	.9816	.4096	.8375	.2654	.6933	.1212	.5491	.9771	.4050
919	.2701	.6980	.1259	.5538	.9817	.4097	.8376	.2655	.6934	.1213	.5492	.9772	.4051
922	.2701	.6981	.1260	.5539	.9818	.4097	.8377	.2656	.6935	.1214	.5493	.9773	.4052
427925	10.2702	10.6981	11.1261	11.5540	11.9819	12.4098	12.8378	13.2657	13.6936	14.1215	14.5495	14.9774	15.4053
928	.2703	.6982	.1261	.5541	.9820	.4099	.8378	.2658	.6937	.1216	.5496	.9775	.4054
931	.2703	.6983	.1262	.5541	.9821	.4100	.8379	.2659	.6938	.1217	.5497	.9776	.4055
934	.2704	.6984	.1263	.5542	.9822	.4101	.8380	.2660	.6939	.1218	.5498	.9777	.4056
937	.2705	.6984	.1264	.5543	.9822	.4102	.8381	.2660	.6940	.1219	.5499	.9778	.4057
427940	10.2706	10.6985	11.1264	11.5544	11.9823	12.4103	12.8382	13.2661	13.6941	14.1220	14.5500	14.9779	15.4058
943	.2706	.6986	.1265	.5545	.9824	.4103	.8383	.2662	.6942	.1221	.5501	.9780	.4059
946	.2707	.6987	.1266	.5545	.9825	.4104	.8384	.2663	.6943	.1222	.5502	.9781	.4061
949	.2708	.6987	.1267	.5546	.9826	.4105	.8385	.2664	.6944	.1223	.5503	.9782	.4062
952	.2708	.6988	.1268	.5547	.9827	.4106	.8386	.2665	.6945	.1224	.5504	.9783	.4063
427955	10.2709	10.6989	11.1268	11.5548	11.9827	12.4107	12.8387	13.2666	13.6946	14.1225	14.5505	14.9784	15.4064
958	.2710	.6990	.1269	.5549	.9828	.4108	.8387	.2667	.6947	.1226	.5506	.9785	.4065
961	.2711	.6990	.1270	.5549	.9829	.4109	.8388	.2668	.6948	.1227	.5507	.9786	.4066
964	.2711	.6991	.1271	.5550	.9830	.4110	.8389	.2669	.6948	.1228	.5508	.9787	.4067
967	.2712	.6992	.1271	.5551	.9831	.4110	.8390	.2670	.6949	.1229	.5509	.9788	.4068
427970	10.2713	10.6993	11.1272	11.5552	11.9832	12.4111	12.8391	13.2671	13.6950	14.1230	14.5510	14.9790	15.4069
973	.2714	.6993	.1273	.5553	.9832	.4112	.8392	.2672	.6951	.1231	.5511	.9791	.4070
976	.2714	.6994	.1274	.5554	.9833	.4113	.8393	.2673	.6952	.1232	.5512	.9792	.4071
979	.2715	.6995	.1275	.5554	.9834	.4114	.8394	.2673	.6953	.1233	.5513	.9793	.4072
982	.2716	.6996	.1275	.5555	.9835	.4115	.8395	.2674	.6954	.1234	.5514	.9794	.4074
427985	10.2716	10.6996	11.1276	11.5556	11.9836	12.4116	12.8396	13.2675	13.6955	14.1235	14.5515	14.9795	15.4075
988	.2717	.6997	.1277	.5557	.9837	.4117	.8396	.2676	.6956	.1236	.5516	.9796	.4076
991	.2718	.6998	.1278	.5558	.9837	.4117	.8397	.2677	.6957	.1237	.5517	.9797	.4077
994	.2719	.6999	.1278	.5558	.9838	.4118	.8398	.2678	.6958	.1238	.5518	.9798	.4078
997	.2719	.6999	.1279	.5559	.9839	.4119	.8399	.2679	.6959	.1239	.5519	.9799	.4079
428000	10.2720	10.7000	11.1280	11.5560	11.9840	12.4120	12.8400	13.2680	13.6960	14.1240	14.5520	14.9800	15.4080

MEGACYCLES PER SECOND

H A R M O N I C S

BASIC FREQ.	37	38	39	40	41	42	43	44	45	46	47	48	50
427700	15.8249	16.2526	16.6803	17.1080	17.5357	17.9634	18.3911	18.8188	19.2465	19.6742	20.1019	20.5296	21.3850
703	.8250	.2527	.6804	.1081	.5358	.9635	.3912	.8189	.2466	.6743	.1020	.5297	.3852
706	.8251	.2528	.6805	.1082	.5359	.9637	.3914	.8191	.2468	.6745	.1022	.5299	.3853
709	.8252	.2529	.6807	.1084	.5361	.9638	.3915	.8192	.2469	.6746	.1023	.5300	.3855
712	.8253	.2531	.6808	.1085	.5362	.9639	.3916	.8193	.2470	.6748	.1025	.5302	.3856
427715	15.8255	16.2532	16.6809	17.1086	17.5363	17.9640	18.3917	18.8195	19.2472	19.6749	20.1026	20.5303	21.3858
718	.8256	.2533	.6810	.1087	.5364	.9642	.3919	.8196	.2473	.6750	.1027	.5305	.3859
721	.8257	.2534	.6811	.1088	.5366	.9643	.3920	.8197	.2474	.6752	.1029	.5306	.3861
724	.8258	.2535	.6812	.1090	.5367	.9644	.3921	.8199	.2476	.6753	.1030	.5308	.3862
727	.8259	.2536	.6814	.1091	.5368	.9645	.3923	.8200	.2477	.6754	.1032	.5309	.3864
427730	15.8260	16.2537	16.6815	17.1092	17.5369	17.9647	18.3924	18.8201	19.2479	19.6756	20.1033	20.5310	21.3865
733	.8261	.2539	.6816	.1093	.5371	.9648	.3925	.8203	.2480	.6757	.1035	.5312	.3867
736	.8262	.2540	.6817	.1094	.5372	.9649	.3926	.8204	.2481	.6759	.1036	.5313	.3868
739	.8263	.2541	.6818	.1096	.5373	.9650	.3928	.8205	.2483	.6760	.1037	.5315	.3870
742	.8265	.2542	.6819	.1097	.5374	.9652	.3929	.8206	.2484	.6761	.1039	.5316	.3871
427745	15.8266	16.2543	16.6821	17.1098	17.5375	17.9653	18.3930	18.8208	19.2485	19.6763	20.1040	20.5318	21.3873
748	.8267	.2544	.6822	.1099	.5377	.9654	.3932	.8209	.2487	.6764	.1042	.5319	.3874
751	.8268	.2545	.6823	.1100	.5378	.9655	.3933	.8210	.2488	.6765	.1043	.5320	.3876
754	.8269	.2547	.6824	.1102	.5379	.9657	.3934	.8212	.2489	.6767	.1044	.5322	.3877
757	.8270	.2548	.6825	.1103	.5380	.9658	.3936	.8213	.2491	.6768	.1046	.5323	.3879
427760	15.8271	16.2549	16.6826	17.1104	17.5382	17.9659	18.3937	18.8214	19.2492	19.6770	20.1047	20.5325	21.3880
763	.8272	.2550	.6828	.1105	.5383	.9660	.3938	.8216	.2493	.6771	.1049	.5326	.3882
766	.8273	.2551	.6829	.1106	.5384	.9662	.3939	.8217	.2495	.6772	.1050	.5328	.3883
769	.8275	.2552	.6830	.1108	.5385	.9663	.3941	.8218	.2496	.6774	.1051	.5329	.3885
772	.8276	.2553	.6831	.1109	.5387	.9664	.3942	.8220	.2497	.6775	.1053	.5331	.3886
427775	15.8277	16.2555	16.6832	17.1110	17.5388	17.9666	18.3943	18.8221	19.2499	19.6777	20.1054	20.5332	21.3888
778	.8278	.2556	.6833	.1111	.5389	.9667	.3945	.8222	.2500	.6778	.1056	.5333	.3889
781	.8279	.2557	.6835	.1112	.5390	.9668	.3946	.8224	.2501	.6779	.1057	.5335	.3891
784	.8280	.2558	.6836	.1114	.5391	.9669	.3947	.8225	.2503	.6781	.1058	.5336	.3892
787	.8281	.2559	.6837	.1115	.5393	.9671	.3948	.8226	.2504	.6782	.1060	.5338	.3894
427790	15.8282	16.2560	16.6838	17.1116	17.5394	17.9672	18.3950	18.8228	19.2506	19.6783	20.1061	20.5339	21.3895
793	.8283	.2561	.6839	.1117	.5395	.9673	.3951	.8229	.2507	.6785	.1063	.5341	.3897
796	.8285	.2562	.6840	.1118	.5396	.9674	.3952	.8230	.2508	.6786	.1064	.5342	.3898
799	.8286	.2564	.6842	.1120	.5398	.9676	.3954	.8232	.2510	.6788	.1066	.5344	.3900
802	.8287	.2565	.6843	.1121	.5399	.9677	.3955	.8233	.2511	.6789	.1067	.5345	.3901
427805	15.8288	16.2566	16.6844	17.1122	17.5400	17.9678	18.3956	18.8234	19.2512	19.6790	20.1068	20.5346	21.3903
808	.8289	.2567	.6845	.1123	.5401	.9679	.3957	.8236	.2514	.6792	.1070	.5348	.3904
811	.8290	.2578	.6846	.1124	.5403	.9681	.3959	.8237	.2515	.6793	.1071	.5349	.3906
814	.8291	.2569	.6847	.1126	.5404	.9682	.3960	.8238	.2516	.6794	.1073	.5351	.3907
817	.8292	.2570	.6849	.1127	.5405	.9683	.3961	.8239	.2518	.6796	.1074	.5352	.3909
427820	15.8293	16.2572	16.6850	17.1128	17.5406	17.9684	18.3963	18.8241	19.2519	19.6797	20.1075	20.5354	21.3910
823	.8295	.2573	.6851	.1129	.5407	.9686	.3964	.8242	.2520	.6799	.1077	.5355	.3912
826	.8296	.2574	.6852	.1130	.5409	.9687	.3965	.8243	.2522	.6800	.1078	.5356	.3913
829	.8297	.2575	.6853	.1132	.5410	.9688	.3966	.8245	.2523	.6801	.1080	.5358	.3915
832	.8298	.2576	.6854	.1133	.5411	.9689	.3968	.8246	.2524	.6803	.1081	.5359	.3916
427835	15.8299	16.2577	16.6856	17.1134	17.5412	17.9691	18.3969	18.8247	19.2526	19.6804	20.1082	20.5361	21.3918
838	.8300	.2578	.6857	.1135	.5414	.9692	.3970	.8249	.2527	.6805	.1084	.5362	.3919
841	.8301	.2580	.6858	.1136	.5415	.9693	.3972	.8250	.2528	.6807	.1085	.5364	.3921
844	.8302	.2581	.6859	.1138	.5416	.9694	.3973	.8251	.2530	.6808	.1087	.5365	.3922
847	.8303	.2582	.6860	.1139	.5417	.9696	.3974	.8253	.2531	.6810	.1088	.5367	.3924
427850	15.8305	16.2583	16.6862	17.1140	17.5419	17.9697	18.3976	18.8254	19.2533	19.6811	20.1090	20.5368	21.3925
853	.8306	.2584	.6863	.1141	.5420	.9698	.3977	.8255	.2534	.6812	.1091	.5369	.3927
856	.8307	.2585	.6864	.1142	.5421	.9700	.3978	.8257	.2535	.6814	.1092	.5371	.3928
859	.8308	.2586	.6865	.1144	.5422	.9701	.3979	.8258	.2537	.6815	.1094	.5372	.3930
862	.8309	.2588	.6866	.1145	.5423	.9702	.3981	.8259	.2538	.6817	.1095	.5374	.3931
427865	15.8310	16.2589	16.6867	17.1146	17.5425	17.9703	18.3982	18.8261	19.2539	19.6818	20.1097	20.5375	21.3933
868	.8311	.2590	.6869	.1147	.5426	.9705	.3983	.8262	.2531	.6819	.1098	.5377	.3934
871	.8312	.2591	.6870	.1148	.5427	.9706	.3985	.8263	.2542	.6821	.1099	.5378	.3936
874	.8313	.2592	.6871	.1150	.5428	.9707	.3986	.8265	.2543	.6822	.1101	.5380	.3937
877	.8314	.2593	.6872	.1151	.5430	.9708	.3987	.8266	.2545	.6823	.1102	.5381	.3939
427880	15.8316	16.2594	16.6873	17.1152	17.5431	17.9710	18.3988	18.8267	19.2546	19.6825	20.1104	20.5382	21.3940
883	.8317	.2596	.6874	.1153	.5432	.9711	.3990	.8269	.2547	.6826	.1105	.5384	.3942
886	.8318	.2597	.6876	.1154	.5433	.9712	.3991	.8270	.2549	.6828	.1106	.5385	.3943
889	.8319	.2598	.6877	.1156	.5434	.9713	.3992	.8271	.2550	.6829	.1108	.5387	.3945
892	.8320	.2599	.6878	.1157	.5436	.9715	.3994	.8272	.2551	.6830	.1109	.5388	.3946
427895	15.8321	16.2600	16.6879	17.1158	17.5437	17.9716	18.3995	18.8274	19.2553	19.6832	20.1111	20.5390	21.3948
898	.8322	.2601	.6880	.1159	.5438	.9717	.3996	.8275	.2554	.6833	.1112	.5391	.3949
901	.8323	.2602	.6881	.1160	.5439	.9718	.3997	.8276	.2555	.6834	.1113	.5392	.3951
904	.8324	.2604	.6883	.1162	.5441	.9720	.3999	.8278	.2557	.6836	.1115	.5394	.3952
907	.8326	.2605	.6884	.1163	.5442	.9721	.4000	.8279	.2558	.6837	.1116	.5395	.3954
427910	15.8327	16.2606	16.6885	17.1164	17.5443	17.9722	18.4001	18.8280	19.2560	19.6839	20.1118	20.5397	21.3955
913	.8328	.2607	.6886	.1165	.5444	.9723	.4003	.8282	.2561	.6840	.1119	.5398	.3957
916	.8329	.2608	.6887	.1166	.5446	.9725	.4004	.8283	.2562	.6841	.1121	.5400	.3958
919	.8330	.2609	.6888	.1168	.5447	.9726	.4005	.8284	.2564	.6843	.1122	.5401	.3960
922	.8331	.2610	.6890	.1169	.5448	.9727	.4006	.8286	.2565	.6844	.1123	.5403	.3961
427925	15.8332	16.2612	16.6891	17.1170	17.5449	17.9729	18.4008	18.8287	19.2566	19.6846	20.1125	20.5404	21.3963
928	.8333	.2613	.6892	.1171	.5450	.9730	.4009	.8288	.2568	.6847	.1126	.5405	.3964
931	.8334	.2614	.6893	.1172	.5452	.9731	.4010	.8290	.2569	.6848	.1128	.5407	.3966
934	.8336	.2615	.6894	.1174	.5453	.9732	.4012	.8291	.2570	.6850	.1129	.5408	.3967
937	.8337	.2616	.6895	.1175	.5454	.9734	.4013	.8292	.2572	.6851	.1130	.5410	.3969
427940	15.8338	16.2617	16.6897	17.1176	17.5455	17.9735	18.4014	18.8294	19.2573	19.6852	20.1132	20.5411	21.3970
943	.8339	.2618	.6898	.1177	.5457	.9736	.4015	.8295	.2574	.6854	.1133	.5413	.3972
946	.8340	.2619	.6899	.1178	.5458	.9737	.4017	.8296	.2576	.6855	.1135	.5414	.3973
949	.8341	.2621	.6900	.1180	.5459	.9739	.4018	.8298	.2577	.6857	.1136	.5416	.3975
952	.8342	.2622	.6901	.1181	.5460	.9740	.4019	.8299	.2578	.6858	.1137	.5417	.3976
427955	15.8343	16.2623	16.6902	17.1182	17.5462	17.9741	18.4021	18.8300	19.2580	19.6859	20.1139	20.5418	21.3978
958	.8344	.2624	.6904	.1183	.5463	.9742	.4022	.8302	.2581	.6861	.1140	.5420	.3979
961	.8346	.2625	.6905	.1184	.5464	.9744	.4023	.8303	.2582	.6862	.1142	.5421	.3981
964	.8347	.2626	.6906	.1186	.5465	.9745	.4025	.8304	.2584	.6863	.1143	.5423	.3982
967	.8348	.2627	.6907	.1187	.5466	.9746	.4026	.8305	.2585	.6865	.1144	.5424	.3984
427970	15.8349	16.2629	16.6908	17.1188	17.5468	17.9747	18.4027	18.8307	19.2587	19.6866	20.1146	20.5426	21.3985
973	.8350	.2630	.6909	.1189	.5469	.9749	.4028	.8308	.2588	.6868	.1147	.5427	.3987
976	.8351	.2631	.6911	.1190	.5470	.9750	.4030	.8309	.2589	.6869	.1149	.5428	.3988
979	.8352	.2632	.6912	.1192	.5471	.9751	.4031	.8311	.2591	.6870	.1150	.5430	.3990
982	.8353	.2633	.6913	.1193	.5473	.9752	.4032	.8312	.2592	.6872	.1152	.5431	.3991
427985	15.8354	16.2634	16.6914	17.1194	17.5474	17.9754	18.4034	18.8313	19.2593	19.6873	20.1153	20.5433	21.3993
988	.8356	.2635	.6915	.1195	.5475	.9755	.4035	.8315	.2595	.6874	.1154	.5434	.3994
991	.8357	.2637	.6916	.1196	.5476	.9756	.4036	.8316	.2596	.6876	.1156	.5436	.3996
994	.8358	.2638	.6918	.1198	.5478	.9757	.4037	.8317	.2597	.6877	.1157	.5437	.3997
997	.8359	.2639	.6919	.1199	.5479	.9759	.4039	.8319	.2599	.6879	.1159	.5439	.3999
428000	15.8360	16.2640	16.6920	17.1200	17.5480	17.9760	18.4040	18.8320	19.2600	19.6880	20.1160	20.5440	21.4000

MEGACYCLES PER SECOND

H A R M O N I C S

BASIC FREQ.	24	25	26	27	28	29	30	31	32	33	34	35	36
428000	10.2720	10.7000	11.1280	11.5560	11.9840	12.4120	12.8400	13.2680	13.6960	14.1240	14.5520	14.9800	15.4080
003	.2721	.7001	.1281	.5561	.9841	.4121	.8401	.2681	.6961	.1241	.5521	.9801	.4081
006	.2721	.7002	.1282	.5562	.9842	.4122	.8402	.2682	.6962	.1242	.5522	.9802	.4082
009	.2722	.7002	.1282	.5562	.9843	.4123	.8403	.2683	.6963	.1243	.5523	.9803	.4083
012	.2723	.7003	.1283	.5563	.9843	.4123	.8404	.2684	.6964	.1244	.5524	.9804	.4084
428015	10.2724	10.7004	11.1284	11.5564	11.9844	12.4124	12.8405	13.2685	13.6965	14.1245	14.5525	14.9805	15.4085
018	.2724	.7005	.1285	.5565	.9845	.4125	.8405	.2686	.6966	.1246	.5526	.9806	.4086
021	.2725	.7005	.1285	.5566	.9846	.4126	.8406	.2687	.6967	.1247	.5527	.9807	.4088
024	.2726	.7006	.1286	.5566	.9847	.4127	.8407	.2687	.6968	.1248	.5528	.9808	.4089
027	.2726	.7007	.1287	.5567	.9848	.4128	.8408	.2688	.6969	.1249	.5529	.9809	.4090
428030	10.2727	10.7008	11.1288	11.5568	11.9848	12.4129	12.8409	13.2689	13.6970	14.1250	14.5530	14.9811	15.4091
033	.2728	.7008	.1289	.5569	.9849	.4130	.8410	.2690	.6971	.1251	.5531	.9812	.4092
036	.2729	.7009	.1289	.5570	.9850	.4130	.8411	.2691	.6972	.1252	.5532	.9813	.4093
039	.2729	.7010	.1290	.5571	.9851	.4131	.8412	.2692	.6972	.1253	.5533	.9814	.4094
042	.2730	.7011	.1291	.5571	.9852	.4132	.8413	.2693	.6973	.1254	.5534	.9815	.4095
428045	10.2731	10.7011	11.1292	11.5572	11.9853	12.4133	12.8414	13.2694	13.6974	14.1255	14.5535	14.9816	15.4096
048	.2732	.7012	.1292	.5573	.9853	.4134	.8414	.2695	.6975	.1256	.5536	.9817	.4097
051	.2732	.7013	.1293	.5574	.9854	.4135	.8415	.2696	.6976	.1257	.5537	.9818	.4098
054	.2733	.7014	.1294	.5575	.9855	.4136	.8416	.2697	.6977	.1258	.5538	.9819	.4099
057	.2734	.7014	.1295	.5575	.9856	.4137	.8417	.2698	.6978	.1259	.5539	.9820	.4101
428060	10.2734	10.7015	11.1296	11.5576	11.9857	12.4137	12.8418	13.2699	13.6979	14.1260	14.5540	14.9821	15.4102
063	.2735	.7016	.1296	.5577	.9858	.4138	.8419	.2700	.6980	.1261	.5541	.9822	.4103
066	.2736	.7017	.1297	.5578	.9858	.4139	.8420	.2700	.6981	.1262	.5542	.9823	.4104
069	.2737	.7017	.1298	.5579	.9859	.4140	.8421	.2701	.6982	.1263	.5543	.9824	.4105
072	.2737	.7018	.1299	.5579	.9860	.4141	.8422	.2702	.6983	.1264	.5544	.9825	.4106
428075	10.2738	10.7019	11.1300	11.5580	11.9861	12.4142	12.8423	13.2703	13.6984	14.1265	14.5546	14.9826	15.4107
078	.2739	.7020	.1300	.5581	.9862	.4143	.8423	.2704	.6985	.1266	.5547	.9827	.4108
081	.2739	.7020	.1301	.5582	.9863	.4143	.8424	.2705	.6986	.1267	.5548	.9828	.4109
084	.2740	.7021	.1302	.5583	.9864	.4144	.8425	.2706	.6987	.1268	.5549	.9829	.4110
087	.2741	.7022	.1303	.5583	.9864	.4145	.8426	.2707	.6988	.1269	.5550	.9830	.4111
428090	10.2742	10.7023	11.1303	11.5584	11.9865	12.4146	12.8427	13.2708	13.6989	14.1270	14.5551	14.9832	15.4112
093	.2742	.7023	.1304	.5585	.9866	.4147	.8428	.2709	.6990	.1271	.5552	.9833	.4113
096	.2743	.7024	.1305	.5586	.9867	.4148	.8429	.2710	.6991	.1272	.5553	.9834	.4115
099	.2744	.7025	.1306	.5587	.9868	.4149	.8430	.2711	.6992	.1273	.5554	.9835	.4116
102	.2744	.7026	.1307	.5588	.9869	.4150	.8431	.2712	.6993	.1274	.5555	.9836	.4117
428105	10.2745	10.7026	11.1307	11.5588	11.9869	12.4150	12.8432	13.2713	13.6994	14.1275	14.5556	14.9837	15.4118
108	.2746	.7027	.1308	.5589	.9870	.4151	.8432	.2713	.6995	.1276	.5557	.9838	.4119
111	.2747	.7028	.1309	.5590	.9871	.4152	.8433	.2714	.6996	.1277	.5558	.9839	.4120
114	.2747	.7029	.1310	.5591	.9872	.4153	.8434	.2715	.6996	.1278	.5559	.9840	.4121
117	.2748	.7029	.1310	.5592	.9873	.4154	.8435	.2716	.6997	.1279	.5560	.9841	.4122
428120	10.2749	10.7030	11.1311	11.5592	11.9874	12.4155	12.8436	13.2717	13.6998	14.1280	14.5561	14.9842	15.4123
123	.2750	.7031	.1312	.5593	.9874	.4156	.8437	.2718	.6999	.1281	.5562	.9843	.4124
126	.2750	.7032	.1313	.5594	.9875	.4157	.8438	.2719	.7000	.1282	.5563	.9844	.4125
129	.2751	.7032	.1314	.5595	.9876	.4157	.8439	.2720	.7001	.1283	.5564	.9845	.4126
132	.2752	.7033	.1314	.5596	.9877	.4158	.8440	.2721	.7002	.1284	.5565	.9846	.4128
428135	10.2752	10.7034	11.1315	11.5596	11.9878	12.4159	12.8441	13.2722	13.7003	14.1285	14.5566	14.9847	15.4129
138	.2753	.7035	.1316	.5597	.9879	.4160	.8441	.2723	.7004	.1286	.5567	.9848	.4130
141	.2754	.7035	.1317	.5598	.9879	.4161	.8442	.2724	.7005	.1287	.5568	.9849	.4131
144	.2755	.7036	.1317	.5599	.9880	.4162	.8443	.2725	.7006	.1288	.5569	.9850	.4132
147	.2755	.7037	.1318	.5600	.9881	.4163	.8444	.2726	.7007	.1289	.5570	.9851	.4133
428150	10.2756	10.7038	11.1319	11.5601	11.9882	12.4164	12.8445	13.2727	13.7008	14.1290	14.5571	14.9853	15.4134
153	.2757	.7038	.1320	.5601	.9883	.4164	.8446	.2727	.7009	.1290	.5572	.9854	.4135
156	.2757	.7039	.1321	.5602	.9884	.4165	.8447	.2728	.7010	.1291	.5573	.9855	.4136
159	.2758	.7040	.1321	.5603	.9885	.4166	.8448	.2729	.7011	.1292	.5574	.9856	.4137
162	.2759	.7041	.1322	.5604	.9885	.4167	.8449	.2730	.7012	.1293	.5575	.9857	.4138
428165	10.2760	10.7041	11.1323	11.5605	11.9886	12.4168	12.8450	13.2731	13.7013	14.1294	14.5576	14.9858	15.4139
168	.2760	.7042	.1324	.5605	.9887	.4169	.8450	.2732	.7014	.1295	.5577	.9859	.4140
171	.2761	.7043	.1324	.5606	.9888	.4170	.8451	.2733	.7015	.1296	.5578	.9860	.4142
174	.2762	.7044	.1325	.5607	.9889	.4170	.8452	.2734	.7016	.1297	.5579	.9861	.4143
177	.2762	.7044	.1326	.5608	.9890	.4171	.8453	.2735	.7017	.1298	.5580	.9862	.4144
428180	10.2763	10.7045	11.1327	11.5609	11.9890	12.4172	12.8454	13.2736	13.7018	14.1299	14.5581	14.9863	15.4145
183	.2764	.7046	.1328	.5609	.9891	.4173	.8455	.2737	.7019	.1300	.5582	.9864	.4146
186	.2765	.7047	.1328	.5610	.9892	.4174	.8456	.2738	.7020	.1301	.5583	.9865	.4147
189	.2765	.7047	.1329	.5611	.9893	.4175	.8457	.2739	.7020	.1302	.5584	.9866	.4148
192	.2766	.7048	.1330	.5612	.9894	.4176	.8458	.2740	.7021	.1303	.5585	.9867	.4149
428195	10.2767	10.7049	11.1331	11.5613	11.9895	12.4177	12.8459	13.2740	13.7022	14.1304	14.5586	14.9868	15.4150
198	.2768	.7050	.1331	.5613	.9895	.4177	.8459	.2741	.7023	.1305	.5587	.9869	.4151
201	.2768	.7050	.1332	.5614	.9896	.4178	.8460	.2742	.7024	.1306	.5588	.9870	.4152
204	.2769	.7051	.1333	.5615	.9897	.4179	.8461	.2743	.7025	.1307	.5589	.9871	.4153
207	.2770	.7052	.1334	.5616	.9898	.4180	.8462	.2744	.7026	.1308	.5590	.9872	.4155
428210	10.2770	10.7053	11.1335	11.5617	11.9899	12.4181	12.8463	13.2745	13.7027	14.1309	14.5591	14.9874	15.4156
213	.2771	.7053	.1335	.5618	.9900	.4182	.8464	.2746	.7028	.1310	.5592	.9875	.4157
216	.2772	.7054	.1336	.5618	.9900	.4183	.8465	.2747	.7029	.1311	.5593	.9876	.4158
219	.2773	.7055	.1337	.5619	.9901	.4184	.8466	.2748	.7030	.1312	.5594	.9877	.4159
222	.2773	.7056	.1338	.5620	.9902	.4184	.8467	.2749	.7031	.1313	.5595	.9878	.4160
428225	10.2774	10.7056	11.1339	11.5621	11.9903	12.4185	12.8468	13.2750	13.7032	14.1314	14.5597	14.9879	15.4161
228	.2775	.7057	.1339	.5622	.9904	.4186	.8468	.2751	.7033	.1315	.5598	.9880	.4162
231	.2775	.7058	.1340	.5622	.9905	.4187	.8469	.2752	.7034	.1316	.5599	.9881	.4163
234	.2776	.7059	.1341	.5623	.9906	.4188	.8470	.2753	.7035	.1317	.5600	.9882	.4164
237	.2777	.7059	.1342	.5624	.9906	.4189	.8471	2753	.7036	.1318	.5601	.9883	.4165
428240	10.2778	10.7060	11.1342	11.5625	11.9907	12.4190	12.8472	13.2754	13.7037	14.1319	14.5602	14.9884	15.4166
243	.2778	.7061	.1343	.5626	.9908	.4190	.8473	.2755	.7038	.1320	.5603	.9885	.4167
246	.2779	.7062	.1344	.5626	.9909	.4191	.8474	.2756	.7039	.1321	.5604	.9886	.4169
249	.2780	.7062	.1345	.5627	.9910	.4192	.8475	.2757	.7040	.1322	.5605	.9887	.4170
252	.2780	.7063	.1346	.5628	.9911	.4193	.8576	.2758	.7041	.1323	.5606	.9888	.4171
428255	10.2781	10.7064	11.1346	11.5629	11.9911	12.4194	12.8477	13.2759	13.7042	14.1324	14.5607	14.9889	15.4172
258	.2782	.7065	.1347	.5630	.9912	.4195	.8477	.2760	.7043	.1325	.5608	.9890	.4173
261	.2783	.7065	.1348	.5630	.9913	.4196	.8478	.2761	.7044	.1326	.5609	.9891	.4174
264	.2783	.7066	.1349	.5631	.9914	.4197	.8479	.2762	.7044	.1327	.5610	.9892	.4175
267	.2784	.7067	.1349	.5632	.9915	.4197	.8480	.2763	.7045	.1328	.5611	.9893	.4176
428270	10.2785	10.7068	11.1350	11.5633	11.9916	12.4198	12.8481	13.2764	13.7046	14.1329	14.5612	14.9895	15.4177
273	.2786	.7068	.1351	.5634	.9916	.4199	.8482	.2765	.7047	.1330	.5613	.9896	.4178
276	.2786	.7069	.1352	.5635	.9917	.4200	.8483	.2766	.7048	.1331	.5614	.9897	.4179
279	.2787	.7070	.1353	.5635	.9918	.4201	.8484	.2766	.7049	.1332	.5615	.9898	.4180
282	.2788	.7071	.1353	.5636	.9919	.4202	.8485	.2767	.7050	.1333	.5616	.9899	.4182
428285	10.2788	10.7071	11.1354	11.5637	11.9920	12.4203	12.8486	13.2768	13.7051	14.1334	14.5617	14.9900	15.4183
288	.2789	.7072	.1355	.5638	.9921	.4204	.8486	.2769	.7052	.1335	.5618	.9901	.4184
291	.2790	.7073	.1356	.5639	.9921	.4204	.8487	.2770	.7053	.1336	.5619	.9902	.4185
294	.2791	.7074	.1356	.5639	.9922	.4205	.8488	.2771	.7054	.1337	.5620	.9903	.4186
297	.2791	.7074	.1357	.5640	.9923	.4206	.8489	.2772	.7055	.1338	.5621	.9904	.4187
428300	10.2792	10.7075	11.1358	11.5641	11.9924	12.4207	12.8490	13.2773	13.7056	14.1339	14.5622	14.9905	15.4188

MEGACYCLES PER SECOND

H A R M O N I C S

BASIC FREQ.	37	38	39	40	41	42	43	44	45	46	47	48	50
428000	15.8360	16.2640	16.6920	17.1200	17.5480	17.9760	18.4040	18.8320	19.2600	19.6880	20.1160	20.5440	21.4000
003	.8361	.2641	.6921	.1201	.5481	.9761	.4041	.8321	.2601	.6881	.1161	.5441	.4002
006	.8362	.2642	.6922	.1202	.5482	.9763	.4043	.8323	.2603	.6883	.1163	.5443	.4003
009	.8363	.2643	.6924	.1204	.5484	.9764	.4044	.8324	.2604	.6884	.1164	.5444	.4005
012	.8364	.2645	.6925	.1205	.5485	.9765	.4045	.8325	.2605	.6886	.1166	.5446	.4006
428015	15.8366	16.2646	16.6926	17.1206	17.5486	17.9766	18.4046	18.8327	19.2607	19.6887	20.1167	20.5447	21.4008
018	.8367	.2647	.6927	.1207	.5487	.9768	.4048	.8328	.2608	.6888	.1168	.5449	.2009
021	.8368	.2648	.6928	.1208	.5489	.9769	.4049	.8329	.2609	.6890	.1170	.5450	.4011
024	.8369	.2649	.6929	.1210	.5490	.9770	.4050	.8331	.2611	.6891	.1171	.5452	.4012
027	.8370	.2650	.6931	.1211	.5491	.9771	.4052	.8332	.2612	.6892	.1173	.5453	.4014
428030	15.8371	16.2651	16.6932	17.1212	17.5492	17.9773	18.4053	18.8333	19.2614	19.6894	20.1174	20.5454	21.4015
033	.8372	.2653	.6933	.1213	.5494	.9774	.4054	.8335	.2615	.6895	.1176	.5456	.4017
036	.8373	.2654	.6934	.1214	.5495	.9775	.4055	.8336	.2616	.6897	.1177	.5457	.4018
039	.8374	.2655	.6935	.1216	.5496	.9776	.4057	.8337	.2618	.6898	.1178	.5459	.4020
042	.8376	.2656	.6936	.1217	.5497	.9778	.4058	.8338	.2619	.6899	.1180	.5460	.4021
428045	15.8377	16.2657	16.6938	17.1218	17.5498	17:9779	18.4059	18.8340	19.2620	19.6901	20.1181	20.5462	21.4023
048	.8378	.2658	.6939	.1219	.5500	.9780	.4061	.8341	.2622	.6902	.1183	.5463	.4024
051	.8379	.2659	.6940	.1220	.5501	.9781	.4062	.8342	.2623	.6903	.1184	.5464	.4026
054	.8380	.2661	.6941	.1222	.5502	.9783	.4063	.8344	.2624	.6905	.1185	.5466	.4027
057	.8381	.2662	.6942	.1223	.5503	.9784	.4065	.8345	.2626	.6906	.1187	.5467	.4029
428060	15.8382	16.2663	16.6943	17.1224	17.5505	17.9785	18.4066	18.8346	19.2627	19.6908	20.1188	20.5469	21.4030
063	.8383	.2664	.6945	.1225	.5506	.9786	.4067	.8348	.2628	.6909	.1190	.5470	.4032
066	.8384	.2665	.6946	.1226	.5507	.9788	.4068	.8349	.2630	.6910	.1191	.5472	.4033
069	.8386	.2666	.6947	.1228	.5508	.9789	.4070	.8350	.2631	.6912	.1192	.5473	.4035
072	.8387	.2667	.6948	.1229	.5510	.9790	.4071	.8352	.2632	.6913	.1194	.5475	.4036
428075	15.8388	16.2669	16.6949	17.1230	17.5511	17.9792	18.4072	18.8353	19.2634	19.6915	20.1195	20.5476	21.4038
078	.8389	.2670	.6950	.1231	.5512	.9793	.4074	.8354	.2635	.6916	.1197	.5477	.4039
081	.8390	.2671	.6952	.1232	.5513	.9794	.4075	.8356	.2636	.6917	.1198	.5479	.4041
084	.8391	.2672	.6953	.1234	.5514	.9795	.4076	.8357	.2638	.6919	.1199	.5480	.4042
087	.8392	.2673	.6954	.1235	.5516	.9797	.4077	.8358	.2639	.6920	.1201	.5482	.4044
428090	15.8393	16.2674	16.6955	17.1236	17.5517	17.9798	18.4079	18.8360	19.2641	19.6921	20.1202	20.5483	21.4045
093	.8394	.2675	.6956	.1237	.5518	.9799	.4080	.8361	.2642	.6923	.1204	.5485	.4047
096	.8396	.2676	.6957	.1238	.5519	.9800	.4081	.8362	.2643	.6924	.1205	.5486	.4048
099	.8397	.2678	.6959	.1240	.5521	.9802	.4083	.8364	.2645	.6926	.1207	.5488	.4050
102	.8398	.2679	.6960	.1241	.5522	.9803	.4084	.8365	.2646	.6927	.1208	.5489	.4051
428105	15.8399	16.2680	16.6961	17.1242	17.5523	17.9804	18.4085	18.8366	19.2647	19.6928	20.1209	20.5490	21.4053
108	.8400	.2681	.6962	.1243	.5524	.9805	.4086	.8368	.2649	.6930	.1211	.5492	.4054
111	.8401	.2682	.6963	.1244	.5526	.9807	.4088	.8369	.2650	.6931	.1212	.5493	.4056
114	.8402	.2683	.6964	.1246	.5527	.9808	.4089	.8370	.2651	.6932	.1214	.5495	.4057
117	.8403	.2684	.6966	.1247	.5528	.9809	.4090	.8371	.2653	.6934	.1215	.5496	.4059
428120	15.8404	16.2686	16.6967	17.1248	17.5529	17.9810	18.4092	18.8373	19.2654	19.6935	20.1216	20.5498	21.4060
123	.8406	.2687	.6968	.1249	.5530	.9812	.4093	.8374	.2655	.6937	.1218	.5499	.4062
126	.8407	.2688	.6969	.1250	.5532	.9813	.4094	.8375	.2657	.6938	.1219	.5500	.4063
129	.8408	.2689	.6970	.1252	.5533	.9814	.4095	.8377	.2658	.6939	.1221	.5502	.4065
132	.8409	.2690	.6971	.1253	.5534	.9815	.4097	.8378	.2659	.6941	.1222	.5503	.4066
428135	15.8410	16.2691	16.6973	17.1254	17.5535	17.9817	18.4098	18.8379	19.2661	19.6942	20.1223	20.5505	21.4068
138	.8411	.2692	.6974	.1255	.5537	.9818	.4099	.8381	.2662	.6943	.1225	.5506	.4069
141	.8412	.2694	.6975	.1256	.5538	.9819	.4101	.8382	.2663	.6945	.1226	.5508	.4071
144	.8413	.2695	.6976	.1258	.5539	.9820	.4102	.8383	.2665	.6946	.1228	.5509	.4072
147	.8414	.2696	.6977	.1259	.5540	.9822	.4103	.8385	.2666	.6948	.1229	.5511	.4074
428150	15.8416	16.2697	16.6979	17.1260	17.5542	17.9823	18.4105	18.8386	19.2668	19.6949	20.1231	20.5512	21.4075
153	.8417	.2698	.6980	.1261	.5543	.9824	.4106	.8387	.2669	.6950	.1232	.5513	.4077
156	.8418	.2699	.6981	.1262	.5544	.9826	.4107	.8389	.2670	.6952	.1233	.5515	.4078
159	.8419	.2700	.6982	.1264	.5545	.9827	.4108	.8390	.2672	.6953	.1235	.5516	.4080
162	.8420	.2702	.6983	.1265	.5546	.9828	.4110	.8391	.2673	.6955	.1236	.5518	.4081
428165	15.8421	16.2703	16.6984	17.1266	17.5548	17.9829	18.4111	18.8393	19.2674	19.6956	20.1238	20.5519	21.4083
168	.8422	.2704	.6986	.1267	.5549	.9831	.4112	.8394	.2676	.6957	.1239	.5521	.4084
171	.8423	.2705	.6987	.1268	.5550	.9832	.4114	.8395	.2677	.6959	.1240	.5522	.4086
174	.8424	.2706	.6988	.1270	.5551	.9833	.4115	.8397	.2678	.6960	.1242	.5524	.4087
177	.8425	.2707	.6989	.1271	.5553	.9834	.4116	.8398	.2680	.6961	.1243	.5525	.4089
428180	15.8427	16.2708	16.6990	17.1272	17.5554	17.9836	18.4117	18.8399	19.2681	19.6963	20.1245	20.5526	21.4090
183	.8428	.2710	.6991	.1273	.5555	.9837	.4119	.8401	.2682	.6964	.1246	.5528	.4092
186	.8429	.2711	.6993	.1274	.5556	.9838	.4120	.8402	.2684	.6966	.1247	.5529	.4093
189	.8430	.2712	.6994	.1276	.5557	.9839	.4121	.8403	.2685	.6967	.1249	.5531	.4095
192	.8431	.2713	.6995	.1277	.5559	.9841	.4123	.8404	.2686	.6968	.1250	.5532	.4096
428195	15.8432	16.2714	16.6996	17.1278	17.5560	17.9842	18.4124	18.8406	19.2688	19.6970	20.1252	20.5534	21.4098
198	.8433	.2715	.6997	.1279	.5561	.9843	.4125	.8407	.2689	.6971	.1253	.5535	.4099
201	.8434	.2716	.6998	.1280	.5562	.9844	.4126	.8408	.2690	.6972	.1254	.5536	.4101
204	.8435	.2718	.7000	.1282	.5564	.9846	.4128	.8410	.2692	.6974	.1256	.5538	.4102
207	.8437	.2719	.7001	.1283	.5565	.9847	.4129	.8411	.2693	.6975	.1257	.5539	.4104
428210	15.8438	16.2720	16.7002	17.1284	17.5566	17.9848	18.4130	18.8412	19.2695	19.6977	20.1259	20.5541	21.4105
213	.8439	.2721	.7003	.1285	.5567	.9849	.4132	.8414	.2696	.6978	.1260	.5542	.4107
216	.8440	.2722	.7004	.1286	.5569	.9851	.4133	.8415	.2697	.6979	.1262	.5544	.4108
219	.8441	.2723	.7005	.1288	.5570	.9852	.4134	.8416	.2699	.6981	.1263	.5545	.4110
222	.8442	.2724	.7007	.1289	.5571	.9853	.4135	.8418	.2700	.6982	.1264	.5547	.4111
428225	15.8443	16.2726	16.7008	17.1290	17.5572	17.9855	18.4137	18.8419	19.2701	19.6984	20.1266	20.5548	21.4113
228	.8444	.2727	.7009	.1291	.5573	.9856	.4138	.8420	.2703	.6985	.1267	.5549	.4114
231	.8445	.2728	.7010	.1292	.5575	.9857	.4139	.8422	.2704	.6986	.1269	.5551	.4116
234	.8447	.2729	.7011	.1294	.5576	.9858	.4141	.8423	.2705	.6988	.1270	.5552	.4117
237	.8448	.2730	.7012	.1295	.5577	.9860	.4142	.8424	.2707	.6989	.1271	.5554	.4119
428240	15.8449	16.2731	16.7014	17.1296	17.5578	17.9861	18.4143	18.8426	19.2708	19.6990	20.1273	20.5555	21.4120
243	.8450	.2732	.7015	.1297	.5580	.9862	.4144	.8427	.2709	.6992	.1274	.5557	.4122
246	.8451	.2733	.7016	.1298	.5581	.9863	.4146	.8428	.2711	.6993	.1276	.5558	.4123
249	.8452	.2735	.7017	.1300	.5582	.9865	.4147	.8430	.2712	.6995	.1277	.5560	.4125
252	.8453	.2736	.7018	.1301	.5583	.9866	.4148	.8431	.2713	.6996	.1278	.5561	.4126
428255	15.8454	16.2737	16.7019	17.1302	17.5585	17.9867	18.4150	18.8432	19.2715	19.6997	20.1280	20.5562	21.4128
258	.8455	.2738	.7021	.1303	.5586	.9868	.4151	.8434	.2716	.6999	.1281	.5564	.4129
261	.8457	.2739	.7022	.1304	.5587	.9870	.4152	.8435	.2717	.7000	.1283	.5565	.4131
264	.8458	.2740	.7023	.1306	.5588	.9871	.4154	.8436	.2719	.7001	.1284	.5567	.4132
267	.8459	.2741	.7024	.1307	.5589	.9872	.4155	.8437	.2720	.7003	.1285	.5568	.4134
428270	15.8460	16.2743	16.7025	17.1308	17.5591	17.9873	18.4156	18.8439	19.2722	19.7004	20.1287	20.5570	21.4135
273	.8461	.2744	.7026	.1309	.5592	.9875	.4157	.8440	.2723	.7006	.1288	.5571	.4137
276	.8462	.2745	.7028	.1310	.5593	.9876	.4159	.8441	.2724	.7007	.1290	.5572	.4138
279	.8463	.2746	.7029	.1312	.5594	.9877	.4160	.8443	.2726	.7008	.1291	.5574	.4140
282	.8464	.2747	.7030	.1313	.5596	.9878	.4161	.8444	.2727	.7010	.1293	.5575	.4141
428285	15.8465	16.2748	16.7031	17.1314	17.5597	17.9880	18.4163	18.8445	19.2728	19.7011	20.1294	20.5577	21.4143
288	.8467	.2749	.7032	.1315	.5598	.9881	.4164	.8447	.2730	.7012	.1295	.5578	.4144
291	.8468	.2751	.7033	.1316	.5599	.9882	.4165	.8448	.2731	.7014	.1297	.5580	.4146
294	.8469	.2752	.7035	.1318	.5601	.9883	.4166	.8449	.2732	.7015	.1298	.5581	.4147
297	.8470	.2753	.7036	.1319	.5602	.9885	.4168	.8451	.2734	.7017	.1300	.5583	.4149
428300	15.8471	16.2754	16.7037	17.1320	17.5603	17.9886	18.4169	18.8452	19.2735	19.7018	20.1301	20.5584	21.4150

H A R M O N I C S

BASIC FREQ.	24	25	26	27	28	29	30	31	32	33	34	35	36
428300	10.2792	10.7075	11.1358	11.5641	11.9924	12.4207	12.8490	13.2773	13.7056	14.1339	14.5622	14.9905	15.4188
303	.2793	.7076	.1359	.5642	.9925	.4208	.8491	.2774	.7057	.1340	.5623	.9906	.4189
306	.2793	.7077	.1360	.5643	.9926	.4209	.8492	.2775	.7058	.1341	.5624	.9907	.4190
309	.2794	.7077	.1360	.5643	.9927	.4210	.8493	.2776	.7059	.1342	.5625	.9908	.4191
312	.2795	.7078	.1361	.5644	.9927	.4210	.8494	.2777	.7060	.1343	.5626	.9909	.4192
428315	10.2796	10.7079	11.1362	11.5645	11.9928	12.4211	12.8495	13.2778	13.7061	14.1344	14.5627	14.9910	15.4193
318	.2796	.7080	.1363	.5646	.9929	.4212	.8495	.2779	.7062	.1345	.5628	.9911	.4194
321	.2797	.7080	.1363	.5647	.9930	.4213	.8496	.2780	.7063	.1346	.5629	.9912	.4196
324	.2798	.7081	.1364	.5647	.9931	.4214	.8497	.2780	.7064	.1347	.5630	.9913	.4197
327	.2798	.7082	.1365	.5648	.9932	.4215	.8498	.2781	.7065	.1348	.5631	.9914	.4198
428330	10.2799	10.7083	11.1366	11.5649	11.9932	12.4216	12.8499	13.2782	13.7066	14.1349	14.5632	14.9916	15.4199
333	.2800	.7083	.1367	.5650	.9933	.4217	.8500	.2783	.7067	.1350	.4633	.9917	.4200
336	.2801	.7084	.1367	.5651	.9934	.4217	.8501	.2784	.7068	.1351	.5634	.9918	.4201
339	.2801	.7085	.1368	.5652	.9935	.4218	.8502	.2785	.7068	.1352	.5635	.9919	.4202
342	.2802	.7086	.1369	.5652	.9936	.4219	.8503	.2786	.7069	.1353	.5636	.9920	.4203
428345	10.2803	10.7086	11.1370	11.5653	11.9937	12.4220	12.8504	13.2787	13.7070	14.1354	14.5637	14.9921	15.4204
348	.2804	.7087	.1370	.5654	.9937	.4221	.8504	.2788	.7071	.1355	.5638	.9922	.4205
351	.2804	.7088	.1371	.5655	.9938	.4222	.8505	.2789	.7072	.1356	.5639	.9923	.4206
354	.2805	.7089	.1372	.5656	.9939	.4223	.8506	.2790	.7073	.1357	.5640	.9924	.4207
357	.2806	.7089	.1373	.5656	.9940	.4224	.8507	.2791	.7074	.1358	.5641	.9925	.4209
428360	10.2806	10.7090	11.1374	11.5657	11.9941	12.4224	12.8508	13.2792	13.7075	14.1359	14.5642	14.9926	15.4210
363	.2807	.7091	.1374	.5658	.9942	.4225	.8509	.2793	.7076	.1360	.5643	.9927	.4211
366	.2808	.7092	.1375	.5659	.9942	.4226	.8510	.2793	.7077	.1361	.5644	.9928	.4212
369	.2809	.7092	.1376	.5660	.9943	.4227	.8511	.2794	.7078	.1362	.5645	.9929	.4213
372	.2809	.7093	.1377	.5660	.9944	.4228	.8512	.2795	.7079	.1363	.5646	.9930	.4214
428375	10.2810	10.7094	11.1378	11.5661	11.9945	12.4229	12.8513	13.2796	13.7080	14.1364	14.5648	14.9931	15.4215
378	.2811	.7095	.1378	.5662	.9946	.4230	.8513	.2797	.7081	.1365	.5649	.9932	.4216
381	.2811	.7095	.1379	.5663	.9947	.4230	.8514	.2798	.7082	.1366	.5650	.9933	.4217
384	.2812	.7096	.1380	.5664	.9948	.4231	.8515	.2799	.7083	.1367	.5651	.9934	.4218
387	.2813	.7097	.1381	.5664	.9948	.4232	.8516	.2800	.7084	.1368	.5652	.9935	.4219
428390	10.2814	10.7098	11.1381	11.5665	11.9949	12.4233	12.8517	13.2801	13.7085	14.1369	14.5653	14.9937	15.4220
393	.2814	.7098	.1382	.5666	.9950	.4234	.8518	.2802	.7086	.1370	.5654	.9938	.4221
396	.2815	.7099	.1383	.5667	.9951	.4235	.8519	.2803	.7087	.1371	.5655	.9939	.4223
399	.2816	.7100	.1384	.5668	.9952	.4236	.8520	.2804	.7088	.1372	.5656	.9940	.4224
402	.2816	.7101	.1385	.5669	.9953	.4237	.8521	.2805	.7089	.1373	.5657	.9941	.4225
428405	10.2817	10.7101	11.1385	11.5669	11.9953	12.4237	12.8522	13.2806	13.7090	14.1374	14.5658	14.9942	15.4226
408	.2818	.7102	.1386	.5670	.9954	.4238	.8522	.2806	.7091	.1375	.5659	.9943	.4227
411	.2819	.7103	.1387	.5671	.9955	.4239	.8523	.2807	.7092	.1376	.5660	.9944	.4228
414	.2819	.7104	.1388	.5672	.9956	.4240	.8524	.2808	.7092	.1377	.5661	.9945	.4229
417	.2820	.7104	.1388	.5673	.9957	.4241	.8525	.2809	.7093	.1378	.5662	.9946	.4230
428420	10.2821	10.7105	11.1389	11.5673	11.9958	12.4242	12.8526	13.2810	13.7094	14.1379	14.5663	14.9947	15.4231
423	.2822	.7106	.1390	.5674	.9958	.4243	.8527	.2811	.7095	.1380	.5664	.9948	.4232
426	.2822	.7107	.1391	.5675	.9959	.4244	.8528	.2812	.7096	.1381	.5665	.9949	.4233
429	.2823	.7107	.1392	.5676	.9960	.4244	.8529	.2813	.7097	.1382	.5666	.9950	.4234
432	.2824	.7108	.1392	.5677	.9961	.4245	.8530	.2814	.7098	.1383	.5667	.9951	.4236
428435	10.2824	10.7109	11.1393	11.5677	11.9962	12.4246	12.8531	13.2815	13.7099	14.1384	14.5668	14.9952	15.4237
438	.2825	.7110	.1394	.5678	.9963	.4247	.8531	.2816	.7100	.1385	.5669	.9953	.4238
441	.2826	.7110	.1395	.5679	.9963	.4248	.8532	.2817	.7101	.1386	.5670	.9954	.4239
444	.2827	.7111	.1395	.5680	.9964	.4249	.8533	.2818	.7102	.1387	.5671	.9955	.4240
447	.2827	.7112	.1396	.5681	.9965	.4250	.8534	.2819	.7103	.1388	.5672	.9956	.4241
428450	10.2828	10.7113	11.1397	11.5682	11.9966	12.4251	12.8535	13.2820	13.7104	14.1389	14.5673	14.9958	15.4242
453	.2829	.7113	.1398	.5682	.9967	.4251	.8536	.2820	.7105	.1389	.5674	.9959	.4243
456	.2829	.7114	.1399	.5683	.9968	.4252	.8537	.2821	.7106	.1390	.5675	.9960	.4244
459	.2830	.7115	.1399	.5684	.9969	.4253	.8538	.2822	.7107	.1391	.5676	.9961	.4245
462	.2831	.7116	.1400	.5685	.9969	.4254	.8539	.2823	.7108	.1392	.5677	.9962	.4246
428465	10.2832	10.7116	11.1401	11.5686	11.9970	12.4255	12.8540	13.2824	13.7109	14.1393	14.5678	14.9963	15.4247
468	.2832	.7117	.1402	.5686	.9971	.4256	.8540	.2825	.7110	.1394	.5679	.9964	.4248
471	.2833	.7118	.1402	.5687	.9972	.4257	.8541	.2826	.7111	.1395	.5680	.9965	.4250
474	.2834	.7119	.1403	.5688	.9973	.4257	.8542	.2827	.7112	.1396	.5681	.9966	.4251
477	.2834	.7119	.1404	.5689	.9974	.4258	.8543	.2828	.7113	.1397	.5682	.9967	.4252
428480	10.2835	10.7120	11.1405	11.5690	11.9974	12.4259	12.8544	13.2829	13.7114	14.1398	14.5683	14.9968	15.4253
483	.2836	.7121	.1406	.5690	.9975	.4260	.8545	.2830	.7115	.1399	.5684	.9969	.4254
486	.2837	.7122	.1406	.5691	.9976	.4261	.8546	.2831	.7116	.1400	.5685	.9970	.4255
489	.2837	.7122	.1407	.5692	.9977	.4262	.8547	.2832	.7116	.1401	.5686	.9971	.4256
492	.2838	.7123	.1408	.5693	.9978	.4263	.8548	.2833	.7117	.1402	.5687	.9972	.4257
428495	10.2839	10.7124	11.1409	11.5694	11.9979	12.4264	12.8549	13.2833	13.7118	14.1403	14.5688	14.9573	15.4258
498	.2840	.7125	.1409	.5694	.9979	.4264	.8549	.2834	.7119	.1404	.5689	.9974	.4259
501	.2840	.7125	.1410	.5695	.9980	.4265	.8550	.2835	.7120	.1405	.5690	.9975	.4260
504	.2841	.7126	.1411	.5696	.9981	.4266	.8551	.2836	.7121	.1406	.5691	.9976	.4261
507	.2842	.7127	.1412	.5697	.9982	.4267	.8552	.2837	.7122	.1407	.5692	.9977	.4263
428510	10.2842	10.7128	11.1413	11.5698	11.9983	12.4268	12.8553	13.2838	.7123	14.1408	14.5693	14.9979	15.4264
513	.2843	.7128	.1413	.5699	.9984	.4269	.8554	.2839	.7124	.1409	.5694	.9980	.4265
516	.2844	.7129	.1414	.5699	.9984	.4270	.8555	.2840	.7125	.1410	.5695	.9981	.4266
519	.2845	.7130	.1415	.5700	.9985	.4271	.8556	.2841	.7126	.1411	.5696	.9982	.4267
522	.2845	.7131	.1416	.5701	.9986	.4271	.8557	.2842	.7127	.1412	.5697	.9983	.4268
428525	10.2846	10.7131	11.1417	11.5702	11.9987	12.4272	12.8558	13.2843	13.7128	14.1413	14.5699	14.9984	15.4269
528	.2847	.7132	.1417	.5703	.9988	.4273	.8558	.2844	.7129	.1414	.5700	.9985	.4270
531	.2847	.7133	.1418	.5703	.9989	.4274	.8559	.2845	.7130	.1415	.5701	.9986	.4271
534	.2848	.7134	.1419	.5704	.9990	.4275	.8560	.2846	.7131	.1416	.5702	.9987	.4272
537	.2849	.7134	.1420	.5705	.9990	.4276	.8561	.2846	.7132	.1417	.5703	.9988	.4273
428540	10.2850	10.7135	11.1420	11.5706	11.9991	12.4277	12.8562	13.2847	13.7133	14.1418	14.5704	14.9989	15.4274
543	.2850	.7136	.1421	.5707	.9992	.4277	.8563	.2848	.7134	.1419	.5705	.9990	.4275
546	.2851	.7137	.1422	.5707	.9993	.4278	.8564	.2849	.7135	.1420	.5706	.9991	.4277
549	.2852	.7137	.1423	.5708	.9994	.4279	.8565	.2850	.7136	.1421	.5707	.9992	.4278
552	.2852	.7138	.1424	.5709	.9995	.4280	.8566	.2851	.7137	.1422	.5708	.9993	.4279
428555	10.2853	10.7139	11.1424	11.5710	11.9995	12.4281	12.8567	13.2852	13.7138	14.1423	14.5709	14.9994	15.4280
558	.2854	.7140	.1425	.5711	.9996	.4282	.8567	.2853	.7139	.1424	.5710	.9995	.4281
561	.2855	.7140	.1426	.5711	.9997	.4283	.8568	.2854	.7140	.1425	.5711	.9996	.4282
564	.2855	.7141	.1427	.5712	.9998	.4284	.8569	.2855	.7140	.1426	.5712	.9997	.4283
567	.2856	.7142	.1427	.5713	.9999	.4284	.8570	.2856	.7141	.1427	.5713	.9998	.4284
428570	10.2857	10.7143	11.1428	11.5714	12.0000	12.4285	12.8571	13.2857	13.7142	14.1428	14.5714	15.0000	15.4285
573	.2858	.7143	.1429	.5715	.0000	.4286	.8572	.2858	.7143	.1429	.5715	.0001	.4286
576	.2858	.7144	.1430	.5716	.0001	.4287	.8573	.2859	.7144	.1430	.5716	.0002	.4287
579	.2859	.7145	.1431	.5716	.0002	.4288	.8574	.2859	.7145	.1431	.5717	.0003	.4288
582	.2860	.7146	.1431	.5717	.0003	.4289	.8575	.2860	.7146	.1432	.5718	.0004	.4290
428585	10.2860	10.7146	11.1432	11.5718	12.0004	12.4290	12.8576	13.2861	13.7147	14.1433	14.5719	15.0005	15.4291
588	.2861	.7147	.1433	.5719	.0005	.4291	.8576	.2862	.7148	.1434	.5720	.0006	.4292
591	.2862	.7148	.1434	.5720	.0005	.4291	.8577	.2863	.7149	.1435	.5721	.0007	.4293
594	.2863	.7149	.1434	.5720	.0006	.4292	.8578	.2864	.7150	.1436	.5722	.0008	.4294
597	.2863	.7149	.1435	.5721	.0007	.4293	.8579	.2865	.7151	.1437	.5723	.0009	.4295
428600	10.2864	10.7150	11.1436	11.5722	12.0008	12.4294	12.8580	13.2866	13.7152	14.1438	14.5724	15.0010	15.4296

MEGACYCLES PER SECOND

H A R M O N I C S

BASIC FREQ.	37	38	39	40	41	42	43	44	45	46	47	48	50
428300	15.8471	16.2754	16.7037	17.1320	17.5603	17.9886	18.4169	18.8452	19.2735	19.7018	20.1301	20.5584	21.4150
303	.8472	.2755	.7038	.1321	.5604	.9887	.4170	.8453	.2736	.7019	.1302	.5585	.4152
306	.8473	.2756	.7039	.1322	.5605	.9889	.4172	.8455	.2738	.7021	.1304	.5587	.4153
309	.8474	.2757	.7041	.1324	.5607	.9890	.4173	.8456	.2739	.7022	.1305	.5588	.4155
312	.8475	.2759	.7042	.1325	.5608	.9891	.4174	.8457	.2740	.7024	.1307	.5590	.4156
428315	15.8477	16.2760	16.7043	17.1326	17.5609	17.9892	18.4175	18.8459	19.2742	19.7025	20.1308	20.5591	21.4158
318	.8478	.2761	.7044	.1327	.5610	.9894	.4177	.8460	.2743	.7026	.1309	.5593	.4159
321	.8479	.2762	.7045	.1328	.5612	.9895	.4178	.8461	.2744	.7028	.1311	.5594	.4161
324	.8480	.2763	.7046	.1330	.5613	.9896	.4179	.8463	.2746	.7029	.1312	.5596	.4162
327	.8481	.2764	.7048	.1331	.5614	.9897	.4181	.8464	.2747	.7030	.1314	.5597	.4164
428330	15.8482	16.2765	16.7049	17.1332	17.5615	17.9899	18.4182	18.8465	19.2749	19.7032	20.1315	20.5598	21.4165
333	.8483	.2767	.7050	.1333	.5617	.9900	.4183	.8467	.2750	.7033	.1317	.5600	.4167
336	.8484	.2768	.7051	.1334	.5618	.9901	.4184	.8468	.2751	.7035	.1318	.5601	.4168
339	.8485	.2769	.7052	.1336	.5619	.9902	.4186	.8469	.2753	.7036	.1319	.5603	.4170
342	.8487	.2770	.7053	.1337	.5620	.9904	.4187	.8470	.2754	.7037	.1321	.5604	.4171
428345	15.8488	16.2771	16.7055	17.1338	17.5621	17.9905	18.4188	18.8472	19.2755	19.7039	20.1322	20.5606	21.4173
348	.8489	.2772	.7056	.1339	.5623	.9906	.4190	.8473	.2757	.7040	.1324	.5607	.4174
351	.8490	.2773	.7057	.1340	.5624	.9907	.4191	.8474	.2758	.7041	.1325	.5608	.4176
354	.8491	.2775	.7058	.1342	.5625	.9909	.4192	.8476	.2759	.7043	.1326	.5610	.4177
357	.8492	.2776	.7059	.1343	.5626	.9910	.4194	.8477	.2761	.7044	.1328	.5611	.4179
428360	15.8493	16.2777	16.7060	17.1344	17.5628	17.9911	18.4195	18.8478	19.2762	19.7046	20.1329	20.5613	21.4180
363	.8494	.2778	.7062	.1345	.5629	.9912	.4196	.8480	.2763	.7047	.1331	.5614	.4182
366	.8495	.2779	.7063	.1346	.5630	.9914	.4197	.8481	.2765	.7048	.1332	.5616	.4183
369	.8497	.2780	.7064	.1348	.5631	.9915	.4199	.8482	.2766	.7050	.1333	.5617	.4185
372	.8498	.2781	.7065	.1349	.5633	.9916	.4200	.8484	.2767	.7051	.1335	.5619	.4186
428375	15.8499	16.2783	16.7066	17.1350	17.5634	17.9918	18.4201	18.8485	19.2769	19.7053	20.1336	20.5620	21.4188
378	.8500	.2784	.7067	.1351	.5635	.9919	.4203	.8486	.2770	.7054	.1338	.5621	.4189
381	.8501	.2785	.7069	.1352	.5636	.9920	.4204	.8488	.2771	.7055	.1339	.5623	.4191
384	.8502	.2786	.7070	.1354	.5637	.9921	.4205	.8489	.2773	.7057	.1340	.5624	.4192
387	.8503	.2787	.7071	.1355	.5639	.9923	.4206	.8490	.2774	.7058	.1342	.5626	.4194
428390	15.8504	16.2788	16.7072	17.1356	17.5640	17.9924	18.4208	18.8492	19.2776	19.7059	20.1343	20.5627	21.4195
393	.8505	.2789	.7073	.1357	.5641	.9925	.4209	.8493	.2777	.7061	.1345	.5629	.4197
396	.8507	.2790	.7074	.1358	.5642	.9926	.4210	.8494	.2778	.7062	.1346	.5630	.4198
399	.8508	.2792	.7076	.1360	.5644	.9928	.4212	.8496	.2780	.7064	.1348	.5632	.4200
402	.8509	.2793	.7077	.1361	.5645	.9929	.4213	.8497	.2781	.7065	.1349	.5633	.4201
428405	15.8510	16.2794	16.7078	17.1362	17.5646	17.9930	18.4214	18.8498	19.2782	19.7066	20.1350	20.5634	21.4203
408	.8511	.2795	.7079	.1363	.5647	.9931	.4215	.8500	.2784	.7068	.1352	.5636	.4204
411	.8512	.2796	.7080	.1364	.5649	.9933	.4217	.8501	.2785	.7069	.1353	.5637	.4206
414	.8513	.2797	.7081	.1366	.5650	.9934	.4218	.8502	.2786	.7070	.1355	.5639	.4207
417	.8514	.2798	.7083	.1367	.5651	.9935	.4219	.8503	.2788	.7072	.1356	.5640	.4209
428420	15.8515	16.2800	16.7084	17.1368	17.5652	17.9936	18.4221	18.8505	19.2789	19.7073	20.1357	20.5642	21.4210
423	.8517	.2801	.7085	.1369	.5653	.9938	.4222	.8506	.2790	.7075	.1359	.5643	.4212
426	.8518	.2802	.7086	.1370	.5655	.9939	.4223	.8507	.2792	.7076	.1360	.5644	.4213
429	.8519	.2803	.7087	.1372	.5656	.9940	.4224	.8509	.2793	.7077	.1362	.5646	.4215
432	.8520	.2804	.7088	.1373	.5657	.9941	.4226	.8510	.2794	.7079	.1363	.5647	.4216
428435	15.8521	16.2805	16.7090	17.1374	17.5658	17.9943	18.4227	18.8511	19.2796	19.7080	20.1364	20.5649	21.4218
438	.8522	.2806	.7091	.1375	.5660	.9944	.4228	.8513	.2797	.7081	.1366	.5650	.4219
441	.8523	.2808	.7092	.1376	.5661	.9945	.4230	.8514	.2798	.7083	.1367	.5652	.4221
444	.8524	.2809	.7093	.1378	.5662	.9946	.4231	.8515	.2800	.7084	.1369	.5653	.4222
447	.8525	.2810	.7094	.1379	.5663	.9948	.4232	.8517	.2801	.7086	.1370	.5655	.4224
428450	15.8527	16.2811	16.7096	17.1380	17.5665	17.9949	18.4234	18.8518	19.2803	19.7087	20.1372	20.5656	21.4225
453	.8528	.2812	.7097	.1381	.5666	.9950	.4235	.8519	.2804	.7088	.1373	.5657	.4227
456	.8529	.2813	.7098	.1382	.5667	.9952	.5236	.8521	.2805	.7090	.1374	.5659	.4228
459	.8530	.2814	.7099	.1384	.5668	.9953	.4237	.8522	.2807	.7091	.1376	.5660	.4230
462	.8531	.2816	.7100	.1385	.5669	.9954	.4239	.8523	.3808	.7093	.1377	.5662	.4231
428465	15.8532	16.2817	16.7101	17.1386	17.5671	17.9955	18.4240	18.8525	19.2809	19.7094	20.1379	20.5663	21.4233
468	.8533	.2818	.7103	.1387	.5672	.9957	.4241	.8526	.2811	.7095	.1380	.5665	.4234
471	.8534	.2819	.7104	.1388	.5673	.9958	.4243	.8527	.2812	.7097	.1381	.5666	.4236
474	.8535	.2820	.7105	.1390	.5674	.9959	.4244	.8529	.2813	.7098	.1383	.5668	.4237
477	.8536	.2821	.7106	.1391	.5676	.9960	.4245	.8530	.2815	.7099	.1384	.5669	.4239
428480	15.8538	16.2822	16.7107	17.1392	17.5677	17.9962	18.4246	18.8531	19.2816	19.7101	20.1386	20.5670	21.4240
483	.8539	.2824	.7108	.1393	.5678	.9963	.4248	.8533	.2817	.7102	.1387	.5672	.4242
486	.8540	.2825	.7110	.1394	.5679	.9964	.4249	.8534	.2819	.7104	.1388	.5673	.4243
489	.8541	.2826	.7111	.1396	.5680	.9965	.4250	.8535	.2820	.7105	.1390	.5675	.4245
492	.8542	.2827	.7112	.1397	.5682	.9967	.4252	.8536	.2821	.7106	.1391	.5676	.4246
428495	15.8543	16.2828	16.7113	17.1398	17.5683	17.9968	18.4253	18.8538	19.2823	19.7108	20.1393	20.5678	21.4248
498	.8544	.2829	.7114	.1399	.5684	.9969	.4254	.8539	.2824	.7109	.1394	.5679	.4249
501	.8545	.2830	.7115	.1400	.5685	.9970	.4255	.8540	.2825	.7110	.1395	.5680	.4251
504	.8546	.2832	.7117	.1402	.5687	.9972	.4257	.8542	.2827	.7112	.1397	.5682	.4252
507	.8548	.2833	.7118	.1403	.5688	.9973	.4258	.8543	.2828	.7113	.1398	.5683	.4254
428510	15.8549	16.2834	16.7119	17.1404	17.5689	17.9974	18.4259	18.8544	19.2830	19.7115	20.1400	20.5685	21.4255
513	.8550	.2835	.7120	.1405	.5690	.9975	.4261	.8546	.2831	.7116	.1401	.5686	.4257
516	.8551	.2836	.7121	.1406	.5692	.9977	.4262	.8547	.2832	.7117	.1403	.5688	.4258
519	.8552	.2837	.7122	.1408	.5693	.9978	.4263	.8548	.2834	.7119	.1404	.5689	.4260
522	.8553	.2838	.7124	.1409	.5694	.9979	.4264	.8550	.2835	.7120	.1405	.5691	.4261
428525	15.8554	16.2840	16.7125	17.1410	17.5695	17.9981	18.4266	18.8551	19.2836	19.7122	20.1407	20.5692	21.4263
528	.8555	.2841	.7126	.1411	.5696	.9982	.4267	.8552	.2838	.7123	.1408	.5693	.4264
531	.8556	.2842	.7127	.1412	.5698	.9983	.4268	.8554	.2839	.7124	.1410	.5695	.4266
534	.8558	.2843	.7128	.1414	.5699	.9984	.4270	.8555	.2840	.7126	.1411	.5696	.4267
537	.8559	.2844	.7129	.1415	.5700	.9986	.4271	.8556	.2842	.7127	.1412	.5698	.4269
428540	15.8560	16.2845	16.7131	17.1416	17.5701	17.9987	18.4272	18.8558	19.2843	19.7128	20.1414	20.5699	21.4270
543	.8561	.2846	.7132	.1417	.5703	.9988	.4273	.8559	.2844	.7130	.1415	.5701	.4272
546	.8562	.2847	.7133	.1418	.5704	.9989	.4275	.8560	.2846	.7131	.1417	.5702	.4273
549	.8563	.2849	.7134	.1420	.5705	.9991	.4276	.8562	.2847	.7133	.1418	.5704	.4275
552	.8564	.2850	.7135	.1421	.5706	.9992	.4277	.8563	.2848	.7134	.1419	.5705	.4276
428555	15.8565	16.2851	16.7136	17.1422	17.5708	17.9993	18.4279	18.8564	19.2850	19.7135	20.1421	20.5706	21.4278
558	.8566	.2852	.7138	.1423	.5709	.9994	.4280	.8566	.2851	.7137	.1422	.5708	.4279
561	.8568	.2853	.7139	.1424	.5710	.9996	.4281	.8567	.2852	.7138	.1424	.5709	.4281
564	.8569	.2854	.7140	.1426	.5711	.9997	.4283	.8568	.2854	.7139	.1425	.5711	.4282
567	.8570	.2855	.7141	.1427	.5712	.9998	.4284	.8569	.2855	.7141	.1426	.5712	.4284
428570	15.8571	16.2857	16.7142	17.1428	17.5714	17.9999	18.4285	18.8571	19.2857	19.7142	20.1428	20.5714	21.4285
573	.8572	.2858	.7143	.1429	.5715	18.0001	.4286	.8572	.2858	.7144	.1429	.5715	.4287
576	.8573	.2859	.7145	.1430	.5716	.0002	.4288	.8573	.2859	.7145	.1431	.5716	.4288
579	.8574	.2860	.7146	.1432	.5717	.0003	.4289	.8575	.2861	.7146	.1432	.5718	.4290
582	.8575	.2861	.7147	.1433	.5719	.0004	.4290	.8576	.2862	.7148	.1434	.5719	.4291
428585	15.8576	16.2862	16.7148	17.1434	17.5720	18.0006	18.4292	18.8577	19.2863	19.7149	20.1435	20.5721	21.4293
588	.8578	.2863	.7149	.1435	.5721	.0007	.4293	.8579	.2865	.7150	.1436	.5722	.4294
591	.8579	.2865	.7150	.1436	.5722	.0008	.4294	.8580	.2866	.7152	.1438	.5724	.4296
594	.8580	.2866	.7152	.1438	.5724	.0009	.4295	.8581	.2867	.7153	.1439	.5725	.4297
597	15.8581	.2867	.7153	.1439	.5725	.0011	.4297	.8583	.2869	.7155	.1441	.5727	.4299
428600	15.8582	16.2868	16.7154	17.1440	17.5726	18.0012	18.4298	18.8584	19.2870	19.7156	20.1442	20.5728	21.4300

MEGACYCLES PER SECOND

HARMONICS

BASIC FREQ.	24	25	26	27	28	29	30	31	32	33	34	35	36
428600	10.2864	10.7150	11.1436	11.5722	12.0008	12.4294	12.8580	13.2866	13.7152	14.1438	14.5724	15.0010	15.4296
603	.2865	.7151	.1437	.5723	.0009	.4295	.8581	.2867	.7153	.1439	.5725	.0011	.4297
606	.2865	.7152	.1438	.5724	.0010	.4296	.8582	.2868	.7154	.1440	.5726	.0012	.4298
609	.2866	.7152	.1438	.5724	.0011	.4297	.8583	.2869	.7155	.1441	.5727	.0013	.4299
612	.2867	.7153	.1439	.5725	.0011	.4297	.8584	.2870	.7156	.1442	.5728	.0014	.4300
428615	10.2868	10.7154	11.1440	11.5726	12.0012	12.4298	12.8585	13.2871	13.7157	14.1443	14.5729	15.0015	15.4301
618	.2868	.7155	.1441	.5727	.0013	.4299	.8585	.2872	.7158	.1444	.5730	.0016	.4302
621	.2869	.7155	.1441	.5728	.0014	.4300	.8586	.2873	.7159	.1445	.5731	.0017	.4304
624	.2870	.7156	.1442	.5728	.0015	.4301	.8587	.2873	.7160	.1446	.5732	.0018	.4305
627	.2870	.7157	.1443	.5729	.0016	.4302	.8588	.2874	.7161	.1447	.5733	.0019	.4306
428630	10.2871	10.7158	11.1444	11.5730	12.0016	12.4303	12.8589	13.2875	13.7162	14.1448	14.5734	15.0021	15.4307
633	.2872	.7158	.1445	.5731	.0017	.4304	.8590	.2876	.7163	.1449	.5735	.0022	.4308
636	.2873	.7159	.1445	.5732	.0018	.4304	.8591	.2877	.7164	.1450	.5736	.0023	.4309
639	.2873	.7160	.1446	.5733	.0019	.4305	.8592	.2878	.7164	.1451	.5737	.0024	.4310
642	.2874	.7161	.1447	.5733	.0020	.4306	.8593	.3879	.7165	.1452	.5738	.0025	.4311
428645	10.2875	10.7161	11.1448	11.5734	12.0021	12.4307	12.8594	13.2880	13.7166	14.1453	14.5739	15.0026	15.4312
648	.2876	.7162	.1448	.5735	.0021	.4308	.8594	.2881	.7167	.1454	.5740	.0027	.4313
651	.2876	.7163	.1449	.5736	.0022	.4309	.8595	.2882	.7168	.1455	.5741	.0028	.4314
654	.2877	.7164	.1450	.5737	.0023	.4310	.8596	.2883	.7169	.1456	.5742	.0029	.4315
657	.2878	.7164	.1451	.5737	.0024	.4311	.8597	.2884	.7170	.1457	.5743	.0030	.4317
428660	10.2878	10.7165	11.1452	11.5738	12.0025	12.4311	12.8598	13.2885	13.7171	14.1458	14.5744	15.0031	15.4318
663	.2879	.7166	.1452	.5739	.0026	.4312	.8599	.2886	.7172	.1459	.5745	.0032	.4319
666	.2880	.7167	.1453	.5740	.0026	.4313	.8600	.2886	.7173	.1460	.5746	.0033	.4320
669	.2881	.7167	.1454	.5741	.0027	.4314	.8601	.2887	.7174	.1461	.5747	.0034	.4321
672	.2881	.7168	.1455	.5741	.0028	.4315	.8602	.2888	.7175	.1462	.5748	.0035	.4322
428675	10.2882	10.7169	11.1456	11.5742	12.0029	12.4316	12.8603	13.2889	13.7176	14.1463	14.5750	15.0036	15.4323
678	.2883	.7170	.1456	.5743	.0030	.4317	.8603	.2890	.7177	.1464	.5751	.0037	.4324
681	.2883	.7170	.1457	.5744	.0031	.4317	.8604	.2891	.7178	.1465	.5752	.0038	.4325
684	.2884	.7171	.1458	.5745	.0032	.4318	.8605	.2892	.7179	.1466	.5753	.0039	.4326
687	.2885	.7172	.1459	.5745	.0032	.4319	.8606	.2893	.7180	.1467	.5754	.0040	.4327
428690	10.2886	10.7173	11.1459	11.5746	12.0033	12.4320	12.8607	13.2894	13.7181	14.1468	14.5755	15.0042	15.4328
693	.2886	.7173	.1460	.5747	.0034	.4321	.8608	.2895	.7182	.1469	.5756	.0043	.4329
696	.2887	.7174	.1461	.5748	.0035	.4322	.8609	.2896	.7183	.1470	.5757	.0044	.4331
699	.2888	.7175	.1462	.5749	.0036	.4323	.8610	.2897	.7184	.1471	.5758	.0045	.4332
702	.2888	.7176	.1463	.5750	.0037	.4324	.8611	.2898	.7185	.1472	.5759	.0046	.4333
428705	10.2889	10.7176	11.1463	11.5750	12.0037	12.4324	12.8612	13.2899	13.7186	14.1473	14.5760	15.0047	15.4334
708	.2890	.7177	.1464	.5751	.0038	.4325	.8612	.2899	.7187	.1474	.5761	.0048	.4335
711	.2891	.7178	.1465	.5752	.0039	.4326	.8613	.2900	.7188	.1475	.5762	.0049	.4336
714	.2891	.7179	.1466	.5753	.0040	.4327	.8614	.2901	.7188	.1476	.5763	.0050	.4337
717	.2892	.7179	.1466	.5754	.0041	.4328	.8615	.2902	.7189	.1477	.5764	.0051	.4338
428720	10.2893	10.7180	11.1467	11.5754	12.0042	12.4329	12.8616	13.2903	13.7190	14.1478	14.5765	15.0052	15.4339
723	.2894	.7181	.1468	.5755	.0042	.4330	.8617	.2904	.7191	.1479	.5766	.0053	.4340
726	.2894	.7182	.1469	.5756	.0043	.4331	.8618	.2905	.7192	.1480	.5767	.0054	.4341
729	.2895	.7182	.1470	.5757	.0044	.4331	.8619	.2906	.7193	.1481	.5768	.0055	.4342
732	.2896	.7183	.1470	.5758	.0045	.4332	.8620	.2907	.7194	.1482	.5769	.0056	.4344
428735	10.2896	10.7184	11.1471	11.5758	12.0046	12.4333	12.8621	13.2908	13.7195	14.1483	14.5770	15.0057	15.4345
738	.2897	.7185	.1472	.5759	.0047	.4334	.8621	.2909	.7196	.1484	.5771	.0058	.4346
741	.2898	.7185	.1473	.5760	.0047	.4335	.8622	.2910	.7197	.1485	.5772	.0059	.4347
744	.2899	.7186	.1473	.5761	.0048	.4336	.8623	.2911	.7198	.1486	.5773	.0060	.4348
747	.2899	.7187	.1474	.5762	.0049	.4337	.8624	.2912	.7199	.1487	.5774	.0061	.4349
428750	10.2900	10.7188	11.1475	11.5763	12.0050	12.4338	12.8625	13.2913	13.7200	14.1488	14.5775	15.0063	15.4350
753	.2901	.7188	.1476	.5763	.0051	.4338	.8626	.2913	.7201	.1488	.5776	.0064	.4351
756	.2901	.7189	.1477	.5764	.0052	.4339	.8627	.2914	.7202	.1489	.5777	.0065	.4352
759	.2902	.7190	.1477	.5765	.0053	.4340	.8628	.2915	.7203	.1490	.5778	.0066	.4353
762	.2903	.7191	.1478	.5766	.0053	.4341	.8629	.2916	.7204	.1491	.5779	.0067	.4354
428765	10.2904	10.7191	11.1479	11.5767	12.0054	12.4342	12.8630	13.2917	13.7205	14.1492	14.5780	15.0068	15.4355
768	.2904	.7192	.1480	.5767	.0055	.4343	.8630	.2918	.7206	.1493	.5781	.0069	.4356
771	.2905	.7193	.1480	.5768	.0056	.4344	.8631	.2919	.7207	.1494	.5782	.0070	.4358
774	.2906	.7194	.1481	.5769	.0057	.4344	.8632	.2920	.7208	.1495	.5783	.0071	.4359
777	.2906	.7194	.1482	.5770	.0058	.4345	.8633	.2921	.7209	.1496	.5784	.0072	.4360
428780	10.2907	10.7195	11.1483	11.5771	12.0058	12.4346	12.8634	13.2922	13.7210	14.1497	14.5785	15.0073	15.4361
783	.2908	.7196	.1484	.5771	.0059	.4347	.8635	.2923	.7211	.1498	.5786	.0074	.4362
786	.2909	.7197	.1484	.5772	.0060	.4348	.8636	.2924	.7212	.1499	.5787	.0075	.4363
789	.2909	.7197	.1485	.5773	.0061	.4349	.8637	.2925	.7212	.1500	.5788	.0076	.4364
792	.2910	.7198	.1486	.5774	.0062	.4350	.8638	.2926	.7213	.1501	.5789	.0077	.4365
428795	10.2911	10.7199	11.1487	11.5775	12.0063	12.4351	12.8639	13.2926	13.7214	14.1502	14.5790	15.0078	15.4366
798	.2912	.7200	.1487	.5775	.0063	.4351	.8639	.2927	.7215	.1503	.5791	.0079	.4367
801	.2912	.7200	.1488	.5776	.0064	.4352	.8640	.2928	.7216	.1504	.5792	.0080	.4368
804	.2913	.7201	.1489	.5777	.0065	.4353	.8641	.2929	.7217	.1505	.5793	.0081	.4369
807	.2914	.7202	.1490	.5778	.0066	.4354	.8642	.2930	.7218	.1506	.5794	.0082	.4371
428810	10.2914	10.7203	11.1491	11.5779	12.0067	12.4355	12.8643	13.2931	13.7219	14.1507	14.5795	15.0084	15.4372
813	.2915	.7203	.1491	.5780	.0068	.4356	.8644	.2932	.7220	.1508	.5796	.0085	.4373
816	.2916	.7204	.1492	.5780	.0068	.4357	.8645	.2933	.7221	.1509	.5797	.0086	.4374
819	.2917	.7205	.1493	.5781	.0069	.4358	.8646	.2934	.7222	.1510	.5798	.0087	.4375
822	.2917	.7206	.1494	.5782	.0070	.4358	.8647	.2935	.7223	.1511	.5799	.0088	.4376
428825	10.2918	10.7206	11.1495	11.5783	12.0071	12.4359	12.8648	13.2936	13.7224	14.1512	14.5801	15.0089	15.4377
828	.2919	.7207	.1495	.5784	.0072	.4360	.8648	.2937	.7225	.1513	.5802	.0090	.4378
831	.2919	.7208	.1496	.5784	.0073	.4361	.8649	.2938	.7226	.1514	.5803	.0091	.4379
834	.2920	.7209	.1497	.5785	.0074	.4362	.8650	.2939	.7227	.1515	.5804	.0092	.4380
837	.2921	.7209	.1498	.5786	.0074	.4363	.8651	.2939	.7228	.1516	.5805	.0093	.4381
428840	10.2922	10.7210	11.1498	11.5787	12.0075	12.4364	12.8652	13.2940	13.7229	14.1517	14.5806	15.0094	15.4382
843	.2922	.7211	.1499	.5788	.0076	.4364	.8653	.2941	.7230	.1518	.5807	.0095	.4383
846	.2923	.7212	.1500	.5788	.0077	.4365	.8654	.2942	.7231	.1519	.5808	.0096	.4385
849	.2924	.7212	.1501	.5789	.0078	.4366	.8655	.2943	.7232	.1520	.5809	.0097	.4386
852	.2924	.7213	.1502	.5790	.0079	.4367	.8656	.2944	.7233	.1521	.5810	.0098	.4387
428855	10.2925	10.7214	11.1502	11.5791	12.0079	12.4368	12.8657	13.2945	13.7234	14.1522	14.5811	15.0099	15.4388
858	.2926	.7215	.1503	.5792	.0080	.4369	.8657	.2946	.7235	.1523	.5812	.0100	.4389
861	.2927	.7215	.1504	.5792	.0081	.4370	.8658	.2947	.7236	.1524	.5813	.0101	.4390
864	.2927	.7216	.1505	.5793	.0082	.4371	.8659	.2948	.7236	.1525	.5814	.0102	.4391
867	.2928	.7217	.1505	.5794	.0083	.4371	.8660	.2949	.7237	.1526	.5815	.0103	.4392
428870	10.2929	10.7218	11.1506	11.5795	12.0084	12.4372	12.8661	13.2950	13.7238	14.1527	14.5816	15.0105	15.4393
873	.2930	.7218	.1507	.5796	.0084	.4373	.8662	.2951	.7239	.1528	.5817	.0106	.4394
876	.2930	.7219	.1508	.5797	.0085	.4374	.8663	.2952	.7240	.1529	.5818	.0107	.4395
879	.2931	.7220	.1509	.5797	.0086	.4375	.8664	.2952	.7241	.1530	.5819	.0108	.4396
882	.2932	.7221	.1509	.5798	.0087	.4376	.8665	.2953	.7242	.1531	.5820	.0109	.4398
428885	10.2932	10.7221	11.1510	11.5799	12.0088	12.4377	12.8666	13.2954	13.7243	14.1532	14.5821	15.0110	15.4399
888	.2933	.7222	.1511	.5800	.0089	.4378	.8666	.2955	.7244	.1533	.5822	.0111	.4400
891	.2934	.7223	.1512	.5801	.0089	.4378	.8667	.2956	.7245	.1534	.5823	.0112	.4401
894	.2935	.7224	.1512	.5801	.0090	.4279	.8668	.2957	.7246	.1535	.5824	.0113	.4402
897	.2935	.7224	.1513	.5802	.0091	.4380	.8669	.2958	.7247	.1536	.5825	.0114	.4403
428900	10.2936	10.7225	11.1514	11.5803	12.0092	12.4381	12.8670	13.2959	13.7248	14.1537	14.5826	15.0115	15.4404

MEGACYCLES PER SECOND

H A R M O N I C S

BASIC FREQ.	37	38	39	40	41	42	43	44	45	46	47	48	50
428600	15.8582	16.2868	16.7154	17.1440	17.5726	18.0012	18.4298	18.8584	19.2870	19.7156	20.1442	20.5728	21.4300
603	.8583	.2869	.7155	.1441	.5727	.0013	.4299	.8585	.2871	.7157	.1443	.5729	.4302
606	.8584	.2870	.7156	.1442	.5728	.0015	.4301	.8587	.2873	.7159	.1445	.5731	.4303
609	.8585	.2871	.7158	.1444	.5730	.0016	.4302	.8588	.2874	.7160	.1446	.5732	.4305
612	.8586	.2873	.7159	.1445	.5731	.0017	.4303	.8589	.2875	.7162	.1448	.5734	.4306
428615	15.8588	16.2874	16.7160	17.1446	17.5732	18.0018	18.4304	18.8591	19.2877	19.7163	20.1449	20.5735	21.4308
618	.8589	.2875	.7161	.1447	.5733	.0020	.4306	.8592	.2878	.7164	.1450	.5737	.4309
621	.8590	.2876	.7162	.1448	.5735	.0021	.4307	.8593	.2879	.7166	.1452	.5738	.4311
624	.8591	.2877	.7163	.1450	.5736	.0022	.4308	.8595	.2881	.7167	.1453	.5740	.4312
627	.8592	.2878	.7165	.1451	.5737	.0023	.4310	.8596	.2882	.7168	.1455	.5741	.4314
428630	15.8593	16.2879	16.7166	17.1452	17.5738	18.0025	18.4311	18.8597	19.2884	19.7170	20.1456	20.5742	21.4315
633	.8594	.2881	.7167	.1453	.5740	.0026	.4312	.8599	.2885	.7171	.1458	.5744	.4317
636	.8595	.2882	.7168	.1454	.5741	.0027	.4313	.8600	.2886	.7173	.1459	.5745	.4318
639	.8596	.2883	.7169	.1456	.5742	.0028	.4315	.8601	.2888	.7174	.1460	.5747	.4320
642	.8598	.2884	.7170	.1457	.5743	.0030	.4316	.8602	.2889	.7175	.1462	.5748	.4321
428645	15.8599	16.2885	16.7172	17.1458	17.5744	18.0031	18.4317	18.8604	19.2890	19.7177	20.1463	20.5750	21.4323
648	.8600	.2886	.7173	.1459	.5746	.0032	.4319	.8605	.2892	.7178	.1465	.5751	.4324
651	.8601	.2887	.7174	.1460	.5747	.0033	.4320	.8606	.2893	.7179	.1466	.5752	.4326
654	.8602	.2889	.7175	.1462	.5748	.0035	.4321	.8608	.2894	.7181	.1467	.5754	.4327
657	.8603	.2890	.7176	.1463	.5749	.0036	.4323	.8609	.2896	.7182	.1469	.5755	.4329
428660	15.8604	16.2891	16.7177	17.1464	17.5751	18.0037	18.4324	18.8610	19.2897	19.7184	20.1470	20.5757	21.4330
663	.8605	.2892	.7179	.1465	.5752	.0038	.4325	.8612	.2898	.7185	.1472	.5758	.4332
666	.8606	.2893	.7180	.1466	.5753	.0040	.4326	.8613	.2900	.7186	.1473	.5760	.4333
669	.8608	.2894	.7181	.1468	.5754	.0041	.4328	.8614	.2901	.7188	.1474	.5761	.4335
672	.8609	.2895	.7182	.1469	.5756	.0042	.4329	.8616	.2902	.7189	.1476	.5763	.4336
428675	15.8610	16.2897	16.7183	17.1470	17.5757	18.0044	18.4330	18.8617	19.2904	19.7191	20.1477	20.5764	21.4338
678	.8611	.2898	.7184	.1471	.5758	.0045	.4332	.8618	.2905	.7192	.1479	.5765	.4339
681	.8612	.2899	.7186	.1472	.5759	.0046	.4333	.8620	.2906	.7193	.1480	.5767	.4341
684	.8613	.2900	.7187	.1474	.5760	.0047	.4334	.8621	.2908	.7195	.1481	.5768	.4342
687	.8614	.2901	.7188	.1475	.5762	.0049	.4335	.8622	.2909	.7196	.1483	.5770	.4344
428690	15.8615	16.2902	16.7189	17.1476	17.5763	18.0050	18.4337	18.8624	19.2911	19.7197	20.1484	20.5771	21.4345
693	.8616	.2903	.7190	.1477	.5764	.0051	.4338	.8625	.2912	.7199	.1486	.5773	.4347
696	.8618	.2904	.7191	.1478	.6765	.0052	.4339	.8626	.2913	.7200	.1487	.5774	.4348
699	.8619	.2906	.7193	.1480	.5767	.0054	.4341	.8628	.2915	.7202	.1489	.5776	.4350
702	.8620	.2907	.7194	.1481	.5768	.0055	.4342	.8629	.2916	.7203	.1490	.5777	.4351
428705	15.8621	16.2908	16.7195	17.1482	17.5769	18.0056	18.4343	18.8630	19.2917	19.7204	20.1491	20.5778	21.4353
708	.8622	.2909	.7196	.1483	.5770	.0057	.4344	.8632	.2919	.7206	.1493	.5780	.4354
711	.8623	.2910	.7197	.1484	.5772	.0059	.4346	.8633	.2920	.7207	.1494	.5781	.4356
714	.8624	.2911	.7198	.1486	.5773	.0060	.4347	.8634	.2921	.7208	.1496	.5783	.4357
717	.8625	.2912	.7200	.1487	.5774	.0061	.4348	.8635	.2923	.7210	.1497	.5784	.4359
428720	15.8626	16.2914	16.7201	17.1488	17.5775	18.0062	18.4350	18.8637	19.2924	19.7211	20.1498	20.5786	21.4360
723	.8628	.2915	.7202	.1489	.5776	.0064	.4351	.8638	.2925	.7213	.1500	.5787	.4362
726	.8629	.2916	.7203	.1490	.5778	.0065	.4352	.8639	.2927	.7214	.1501	.5788	.4363
729	.8630	.2917	.7204	.1492	.5779	.0066	.4353	.8541	.2928	.7215	.1503	.5790	.4365
732	.8631	.2918	.7205	.1493	.5780	.0067	.4355	.8642	.2929	.7217	.1504	.5791	.4366
428735	15.8632	16.2919	16.7207	17.1494	17.5781	18.0069	18.4356	18.8643	19.2931	19.7218	20.1505	20.5793	21.4368
738	.8633	.2920	.7208	.1495	.5783	.0070	.4357	.8645	.2932	.7219	.1507	.5794	.4369
741	.8634	.2922	.7209	.1496	.5784	.0071	.4359	.8646	.2933	.7221	.1508	.5796	.4371
744	.8635	.2923	.7210	.1498	.5785	.0072	.4360	.8647	.2935	.7222	.1510	.5797	.4372
747	.8636	.2924	.7211	.1499	.5786	.0074	.4361	.8649	.2936	.7224	.1511	.5799	.4374
428750	15.8638	16.2925	16.7213	17.1500	17.5788	18.0075	18.4363	18.8650	19.2938	19.7225	20.1513	20.5800	21.4375
753	.8639	.2926	.7214	.1501	.5789	.0076	.4364	.8651	.2939	.7226	.1514	.5801	.4377
756	.8640	.2927	.7215	.1502	.5790	.0078	.4365	.8653	.2940	.7228	.1515	.5803	.4378
759	.8641	.2928	.7216	.1504	.5791	.0079	.4366	.8654	.2942	.7229	.1517	.5804	.4380
762	.8642	.2930	.7217	.1505	.5792	.0080	.4368	.8655	.2943	.7231	.1518	.5806	.4381
428765	15.8643	16.2931	16.7218	17.1506	17.5794	18.0081	18.4369	18.8657	19.2944	19.7232	20.1520	20.5807	21.4383
768	.8644	.2932	.7220	.1507	.5795	.0083	.4370	.8658	.2946	.7233	.1521	.5809	.4384
771	.8645	.2933	.7221	.1508	.5796	.0084	.4372	.8659	.2947	.7235	.1522	.5810	.4386
774	.8646	.2934	.7222	.1510	.5797	.0085	.4373	.8661	.2948	.7236	.1524	.5812	.4387
777	.8647	.2935	.7223	.1511	.5799	.0086	.4374	.8662	.2950	.7237	.1525	.5813	.4389
428780	15.8649	16.2936	16.7224	17.1512	17.5800	18.0088	18.4375	18.8663	19.2951	19.7239	20.1527	20.5814	21.4390
783	.8650	.2938	.7225	.1513	.5801	.0089	.4377	.8665	.2952	.7240	.1528	.5816	.4392
786	.8651	.2939	.7227	.1514	.5802	.0090	.4378	.8666	.2954	.7242	.1529	.5817	.4393
789	.8652	.2940	.7228	.1516	.5803	.0091	.4379	.8667	.2955	.7243	.1531	.5819	.4395
792	.8653	.2941	.7229	.1517	.5805	.0093	.4381	.8668	.2956	.7244	.1532	.5820	.4396
428795	15.8654	16.2942	16.7230	17.1518	17.5806	18.0094	18.4382	18.8670	19.2958	19.7246	20.1534	20.5822	21.4398
798	.8655	.2943	.7231	.1519	.5807	.0095	.4383	.8671	.2959	.7247	.1535	.5823	.4399
801	.8656	.2944	.7232	.1520	.5808	.0096	.4384	.8672	.2960	.7248	.1536	.5824	.4401
804	.8657	.2946	.7234	.1522	.5810	.0098	.4386	.8674	.2962	.7250	.1538	.5826	.4402
807	.8659	.2947	.7235	.1523	.5811	.0099	.4387	.8675	.2963	.7251	.1539	.5827	.4404
428810	15.8660	16.2948	16.7236	17.1524	17.5812	18.0100	18.4388	18.8676	19.2965	19.7253	20.1541	20.5829	21.4405
813	.8661	.2949	.7237	.1525	.5813	.0101	.4390	.8678	.2966	.7254	.1542	.5830	.4407
816	.8662	.2950	.7238	.1526	.5815	.0103	.4391	.8679	.2967	.7255	.1544	.5832	.4408
819	.8663	.2951	.7239	.1528	.5816	.0104	.4392	.8680	.2969	.7257	.1545	.5833	.4410
822	.8664	.2952	.7241	.1529	.5817	.0105	.4393	.8682	.2970	.7258	.1546	.5835	.4411
428825	15.8665	16.2954	16.7242	17.1530	17.5818	18.0107	18.4395	18.8683	19.2971	19.7260	20.1548	20.5836	21.4413
828	.8666	.2955	.7243	.1531	.5819	.0108	.4396	.8684	.2973	.7261	.1549	.5837	.4414
831	.8667	.2956	.7244	.1532	.5821	.0109	.4397	.8686	.2974	.7262	.1551	.5839	.4416
834	.8669	.2957	.7245	.1534	.5822	.0110	.4399	.8687	.2975	.7264	.1552	.5840	.4417
837	.8670	.2958	.7246	.1535	.5823	.0112	.4400	.8688	.2977	.7265	.1553	.5842	.4419
428840	15.8671	16.2959	16.7248	17.1536	17.5824	18.0113	18.4401	18.8690	19.2978	19.7266	20.1555	20.5843	21.4420
843	.8672	.2960	.7249	.1537	.5826	.0114	.4402	.8691	.2979	.7268	.1556	.5845	.4422
846	.8673	.2961	.7250	.1538	.5827	.0115	.4404	.8692	.2981	.7269	.1558	.5846	.4423
849	.8674	.2963	.7251	.1540	.5828	.0117	.4405	.8694	.2982	.7271	.1559	.5848	.4425
852	.8675	.2964	.7252	.1541	.5829	.0118	.4406	.8695	.2983	.7272	.1560	.5849	.4426
428855	15.8676	16.2965	16.7253	17.1542	17.5831	18.0119	18.4408	18.8696	19.2985	19.7273	20.1562	20.5850	21.4428
858	.8677	.2966	.7255	.1543	.5832	.0120	.4409	.8698	.2986	.7275	.1563	.5852	.4429
861	.8679	.2967	.7256	.1544	.5833	.0122	.4410	.8699	.2987	.7276	.1565	.5853	.4431
864	.8680	.2968	.7257	.1546	.5834	.0123	.4412	.8700	.2989	.7277	.1566	.5855	.4432
867	.8681	.2969	.7258	.1547	.5835	.0124	.4413	.8701	.2990	.7279	.1567	.5856	.4434
428870	15.8682	16.2971	16.7259	17.1548	17.5837	18.0125	18.4414	18.8703	19.2992	19.7280	20.1569	20.5858	21.4435
873	.8683	.2972	.7260	.1549	.5838	.0127	.4415	.8704	.2993	.7282	.1570	.5859	.4437
876	.8684	.2973	.7262	.1550	.5839	.0128	.4417	.8705	.2994	.7283	.1572	.5860	.4438
879	.8685	.2974	.7263	.1552	.5840	.0129	.4418	.8707	.2996	.7284	.1573	.5862	.4440
882	.8686	.2975	.7264	.1553	.5842	.0130	.4419	.8708	.2997	.7286	.1575	.5863	.4441
428885	15.8687	16.2976	16.7265	17.1554	17.5843	18.0132	18.4421	18.8709	19.2998	19.7287	20.1576	20.5865	21.4443
888	.8689	.2977	.7266	.1555	.5844	.0133	.4422	.8711	.3000	.7288	.1577	.5866	.4444
891	.8690	.2979	.7267	.1556	.5845	.0134	.4423	.8712	.3001	.7290	.1579	.5868	.4446
894	.8691	.2980	.7269	.1558	.5847	.0135	.4424	.8713	.3002	.7291	.1580	.5869	.4447
897	.8692	.2981	.7270	.1559	.5848	.0137	.4426	.8715	.3004	.7293	.1582	.5871	.4449
428900	15.8693	16.2982	16.7271	17.1560	17.5849	18.0138	18.4427	18.8716	19.3005	19.7294	20.1583	20.5872	21.4450

MEGACYCLES PER SECOND

HARMONICS

BASIC FREQ.	24	25	26	27	28	29	30	31	32	33	34	35	36
428900	10.2936	10.7225	11.1514	11.5803	12.0092	12.4381	12.8670	13.2959	13.7248	14.1537	14.5826	15.0115	15.4404
903	.2937	.7226	.1515	.5804	.0093	.4382	.8671	.2960	.7249	.1538	.5827	.0116	.4405
906	.2937	.7227	.1516	.5805	.0094	.4383	.8672	.2961	.7250	.1539	.5828	.0117	.4406
909	.2938	.7227	.1516	.5805	.0095	.4384	.8673	.2962	.7251	.1540	.5829	.0118	.4407
912	.2939	.7228	.1517	.5806	.0095	.4384	.8674	.2963	.7252	.1541	.5830	.0119	.4408
428915	10.2940	10.7229	11.1518	11.5807	12.0096	12.4385	12.8675	13.2964	13.7253	14.1542	14.5831	15.0120	15.4409
918	.2940	.7230	.1519	.5808	.0097	.4386	.8675	.2965	.7254	.1543	.5832	.0121	.4410
921	.2941	.7230	.1519	.5809	.0098	.4387	.8676	.2966	.7255	.1544	.5833	.0122	.4412
924	.2942	.7231	.1520	.5809	.0099	.4388	.8677	.2966	.7256	.1545	.5834	.0123	.4413
927	.2942	.7232	.1521	.5810	.0100	.4389	.8678	.2967	.7257	.1546	.5835	.0124	.4414
428930	10.2943	10.7233	11.1522	11.5811	12.0100	12.4390	12.8679	13.2968	13.7258	14.1547	14.5836	15.0126	15.4415
933	.2944	.7233	.1523	.5812	.0101	.4391	.8680	.2969	.7259	.1548	.5837	.0127	.4416
936	.2945	.7234	.1523	.5813	.0102	.4391	.8681	.2970	.7260	.1549	.5838	.0128	.4417
939	.2945	.7235	.1524	.5814	.0103	.4392	.8682	.2971	.7260	.1550	.5839	.0129	.4418
942	.2946	.7236	.1525	.5814	.0104	.4393	.8683	.2972	.7261	.1551	.5840	.0130	.4419
428945	10.2947	10.7236	11.1526	11.5815	12.0105	12.4394	12.8684	13.2973	13.7262	14.1552	14.5841	15.0131	15.4420
948	.2948	.7237	.1526	.5816	.0105	.4395	.8684	.2974	.7263	.1553	.5842	.0132	.4421
951	.2948	.7238	.1527	.5817	.0106	.4396	.8685	.2975	.7264	.1554	.5843	.0133	.4422
954	.2949	.7239	.1528	.5818	.0107	.4397	.8686	.2976	.7265	.1555	.5844	.0134	.4423
957	.2950	.7239	.1529	.5818	.0108	.4398	.8687	.2977	.7266	.1556	.5845	.0135	.4425
428960	10.2950	10.7240	11.1530	11.5819	12.0109	12.4398	12.8688	13.2978	13.7267	14.1557	14.5846	15.0136	15.4426
963	.2951	.7241	.1530	.5820	.0110	.4399	.8689	.2979	.7268	.1558	.5847	.0137	.4427
966	.2952	.7242	.1531	.5821	.0110	.4400	.8690	.2979	.7269	.1559	.5848	.0138	.4428
969	.2953	.7242	.1532	.5822	.0111	.4401	.8691	.2980	.7270	.1560	.5849	.0139	.4429
972	.2953	.7243	.1533	.5822	.0112	.4402	.8692	.2981	.7271	.1561	.5850	.0140	.4430
428975	10.2954	10.7244	11.1534	11.5823	12.0113	12.4403	12.8693	13.2982	13.7272	14.1562	14.5852	15.0141	15.4431
978	.2955	.7245	.1534	.5824	.0114	.4404	.8693	.2983	.7273	.1563	.5853	.0142	.4432
981	.2955	.7245	.1535	.5825	.0115	.4404	.8694	.2984	.7274	.1564	.5854	.0143	.4433
984	.2956	.7246	.1536	.5826	.0116	.4405	.8695	.2985	.7275	.1565	.5855	.0144	.4434
987	.2957	.7247	.1537	.5826	.0116	.4406	.8696	.2986	.7276	.1566	.5856	.0145	.4435
428990	10.2958	10.7248	11.1537	11.5827	12.0117	12.4407	12.8697	13.2987	13.7277	14.1567	14.5857	15.0147	15.4436
993	.2958	.7248	.1538	.5828	.0118	.4408	.8698	.2988	.7278	.1568	.5858	.0148	.4437
996	.2959	.7249	.1539	.5829	.0119	.4409	.8699	.2989	.7279	.1569	.5859	.0149	.4439
999	.2960	.7250	.1540	.5830	.0120	.4410	.8700	.2990	.7280	.1570	.5860	.0150	.4440
429002	.2960	.7251	.1541	.5831	.0121	.4411	.8701	.2991	.7281	.1571	.5861	.0151	.4441
429005	10.2961	10.7251	11.1541	11.5831	12.0121	12.4411	12.8702	13.2992	13.7282	14.1572	14.5862	15.0152	15.4442
008	.2962	.7252	.1542	.5832	.0122	.4412	.8702	.2992	.7283	.1573	.5863	.0153	.4443
011	.2963	.7253	.1543	.5833	.0123	.4413	.8703	.2993	.7284	.1574	.5864	.0154	.4444
014	.2963	.7254	.1544	.5834	.0124	.4414	.8704	.2994	.7284	.1575	.5865	.0155	.4445
017	.2964	.7254	.1544	.5835	.0125	.4415	.8705	.2995	.7285	.1576	.5866	.0156	.4446
429020	10.2965	10.7255	11.1545	11.5835	12.0126	12.4416	12.8706	13.2996	13.7286	14.1577	14.5867	15.0157	15.4447
023	.2966	.7256	.1546	.5836	.0126	.4417	.8707	.2997	.7287	.1578	.5868	.0158	.4448
026	.2966	.7257	.1547	.5837	.0127	.4418	.8708	.2998	.7288	.1579	.5869	.0159	.4449
029	.2967	.7257	.1548	.5838	.0128	.4418	.8709	.2999	.7289	.1580	.5870	.0160	.4450
032	.2968	.7258	.1548	.5839	.0129	.4419	.8710	.3000	.7290	.1581	.5871	.0161	.4452
429035	10.2968	10.7259	11.1549	11.5839	12.0130	12.4420	12.8711	13.3001	13.7291	14.1582	14.5872	15.0162	15.4453
038	.2969	.7260	.1550	.5840	.0131	.4421	.8711	.3002	.7292	.1583	.5873	.0163	.4454
041	.2970	.7260	.1551	.5841	.0131	.4422	.8712	.3003	.7293	.1584	.5874	.0164	.4455
044	.2971	.7261	.1551	.5842	.0132	.4423	.8713	.3004	.7294	.1585	.5875	.0165	.4456
047	.2971	.7262	.1552	.5843	.0133	.4424	.8714	.3005	.7295	.1586	.5876	.0166	.4457
429050	10.2972	10.7263	11.1553	11.5844	12.0134	12.4425	12.8715	13.3006	13.7296	14.1587	14.5877	15.0168	15.4458
053	.2973	.7263	.1554	.5844	.0135	.4425	.8716	.3006	.7297	.1587	.5878	.0169	.4459
056	.2973	.7264	.1555	.5845	.0136	.4426	.8717	.3007	.7298	.1588	.5879	.0170	.4460
059	.2974	.7265	.1555	.5846	.0137	.4427	.8718	.3008	.7299	.1589	.5880	.0171	.4461
062	.2975	.7266	.1556	.5847	.0137	.4428	.8719	.3009	.7300	.1590	.5881	.0172	.4462
429065	10.2976	10.7266	11.1557	11.5848	12.0138	12.4429	12.8720	13.3010	13.7301	14.1591	14.5882	15.0173	15.4463
068	.2976	.7267	.1558	.5848	.0139	.4430	.8720	.3011	.7302	.1592	.5883	.0174	.4464
071	.2977	.7268	.1558	.5849	.0140	.4431	.8721	.3012	.7303	.1593	.5884	.0175	.4466
074	.2978	.7269	.1559	.5850	.0141	.4431	.8722	.3013	.7304	.1594	.5885	.0176	.4467
077	.2978	.7269	.1560	.5851	.0142	.4432	.8723	.3014	.7305	.1595	.5886	.0177	.4468
429080	10.2979	10.7270	11.1561	11.5852	12.0142	12.4433	12.8724	13.3015	13.7306	14.1596	14.5887	15.0178	15.4469
083	.2980	.7271	.1562	.5852	.0143	.4434	.8725	.3016	.7307	.1597	.5888	.0179	.4470
086	.2981	.7272	.1562	.5853	.0144	.4435	.8726	.3017	.7308	.1598	.5889	.0180	.4471
089	.2981	.7272	.1563	.5854	.0145	.4436	.8727	.3018	.7308	.1599	.5890	.0181	.4472
092	.2982	.7273	.1564	.5855	.0146	.4437	.8728	.3019	.7309	.1600	.5891	.0182	.4473
429095	10.2983	10.7274	11.1565	11.5856	12.0147	12.4438	12.8729	13.3019	13.7310	14.1601	14.5892	15.0183	15.4474
098	.2984	.7275	.1565	.5856	.0147	.4438	.8729	.3020	.7311	.1602	.5893	.0184	.4475
101	.2984	.7275	.1566	.5857	.0148	.4439	.8730	.3021	.7312	.1603	.5894	.0185	.4476
104	.2985	.7276	.1567	.5858	.0149	.4440	.8731	.3022	.7313	.1604	.5895	.0186	.4477
107	.2986	.7277	.1568	.5859	.0150	.4441	.8732	.3023	.7314	.1605	.5896	.0187	.4479
429110	10.2986	10.7278	11.1569	11.5860	12.0151	12.4442	12.8733	13.3024	13.7315	14.1606	14.5897	15.0189	15.4480
113	.2987	.7278	.1569	.5861	.0152	.4443	.8734	.3025	.7316	.1607	.5898	.0190	.4481
116	.2988	.7279	.1570	.5861	.0152	.4444	.8735	.3026	.7317	.1608	.5899	.0191	.4482
119	.2989	.7280	.1571	.5862	.0153	.4445	.8736	.3027	.7318	.1609	.5900	.0192	.4483
122	.2989	.7281	.1572	.5863	.0154	.4445	.8737	.3028	.7319	.1610	.5901	.0193	.4484
429125	10.2990	10.7281	11.1573	11.5864	12.0155	12.4446	12.8738	13.3029	13.7320	14.1611	14.5903	15.0194	15.4485
128	.2991	.7282	.1573	.5865	.0156	.4447	.8738	.3030	.7321	.1612	.5904	.0195	.4486
131	.2991	.7283	.1574	.5865	.0157	.4448	.8739	.3031	.7322	.1613	.5905	.0196	.4487
134	.2992	.7284	.1575	.5866	.0158	.4449	.8740	.3032	.7323	.1614	.5906	.0197	.4488
137	.2993	.7284	.1576	.5867	.0158	.4450	.8741	.3032	.7324	.1615	.5907	.0198	.4489
429140	10.2994	10.7285	11.1576	11.5868	12.0159	12.4451	12.8742	13.3033	13.7325	14.1616	14.5908	15.0199	15.4490
143	.2994	.7286	.1577	.5869	.0160	.4451	.8743	.3034	.7326	.1617	.5909	.0200	.4491
146	.2995	.7287	.1578	.5869	.0161	.4452	.8744	.3035	.7327	.1618	.5910	.0201	.4493
149	.2996	.7287	.1579	.5870	.0162	.4453	.8745	.3036	.7328	.1619	.5911	.0202	.4494
152	.2996	.7288	.1580	.5871	.0163	.4454	.8746	.3037	.7329	.1620	.5912	.0203	.4495
429155	10.2997	10.7289	11.1580	11.5872	12.0163	12.4455	12.8747	13.3038	13.7330	14.1621	14.5913	15.0204	15.4496
158	.2998	.7290	.1581	.5873	.0164	.4456	.8747	.3039	.7331	.1622	.5914	.0205	.4497
161	.2999	.7290	.1582	.5873	.0165	.4457	.8748	.3040	.7332	.1623	.5915	.0206	.4498
164	.2999	.7291	.1583	.5874	.0166	.4458	.8749	.3041	.7332	.1624	.5916	.0207	.4499
167	.3000	.7292	.1583	.5875	.0167	.4458	.8750	.3042	.7333	.1625	.5917	.0208	.4500
429170	10.3001	10.7293	11.1584	11.5876	12.0168	12.4459	12.8751	13.3043	13.7334	14.1626	14.5918	15.0210	15.4501
173	.3002	.7293	.1585	.5877	.0168	.4460	.8752	.3044	.7335	.1627	.5919	.0211	.4502
176	.3002	.7294	.1586	.5878	.0169	.4461	.8753	.3045	.7336	.1628	.5920	.0212	.4503
179	.3003	.7295	.1587	.5878	.0170	.4462	.8754	.3045	.7337	.1629	.5921	.0213	.4504
182	.3004	.7296	.1587	.5879	.0171	.4463	.8755	.3046	.7338	.1630	.5922	.0214	.4506
429185	10.3004	10.7296	11.1588	11.5880	12.0172	12.4464	12.8756	13.3047	13.7339	14.1631	14.5923	15.0215	15.4507
188	.3005	.7297	.1589	.5881	.0173	.4465	.8756	.3048	.7340	.1632	.5924	.0216	.4508
191	.3006	.7298	.1590	.5882	.0173	.4465	.8757	.3049	.7341	.1633	.5925	.0217	.4509
194	.3007	.7299	.1590	.5882	.0174	.4466	.8758	.3050	.7342	.1634	.5926	.0218	.4510
197	.3007	.7299	.1591	.5883	.0175	.4467	.8759	.3051	.7343	.1635	.5927	.0219	.4511
429200	10.3008	10.7300	11.1592	11.5884	12.0176	12.4468	12.8760	13.3052	13.7344	14.1636	14.5928	15.0220	15.4512

MEGACYCLES PER SECOND

H A R M O N I C S

BASIC FREQ.	37	38	39	40	41	42	43	44	45	46	47	48	50
428900	15.8693	16.2982	16.7271	17.1560	17.5849	18.0138	18.4427	18.8716	19.3005	19.7294	20.1583	20.5872	21.4450
903	.8694	.2983	.7272	.1561	.5850	.0139	.4428	.8717	.3006	.7295	.1584	.5873	.4452
906	.8695	.2984	.7273	.1562	.5851	.0141	.4430	.8719	.3008	.7297	.1586	.5875	.4453
909	.8696	.2985	.7275	.1564	.5853	.0142	.4431	.8720	.3009	.7298	.1587	.5876	.4455
912	.8697	.2987	.7276	.1565	.5854	.0143	.4432	.8721	.3010	.7300	.1589	.5878	.4456
428915	15.8699	16.2988	16.7277	17.1566	17.5855	18.0144	18.4433	18.8723	19.3012	19.7301	20.1590	20.5879	21.4458
918	.8700	.2989	.7278	.1567	.5856	.0146	.4435	.8724	.3013	.7302	.1591	.5881	.4459
921	.8701	.2990	.7279	.1568	.5858	.0147	.4436	.8725	.3014	.7304	.1593	.5882	.4461
924	.8702	.2991	.7280	.1570	.5859	.0148	.4437	.8727	.3016	.7305	.1594	.5884	.4462
927	.8703	.2992	.7282	.1571	.5860	.0149	.4439	.8728	.3017	.7306	.1596	.5885	.4464
428930	15.8704	16.2993	16.7283	17.1572	17.5861	18.0151	18.4440	18.8729	19.3019	19.7308	20.1597	20.5886	21.4465
933	.8705	.2995	.7284	.1573	.5863	.0152	.4441	.8731	.3020	.7309	.1599	.5888	.4467
936	.8706	.2996	.7285	.1574	.5864	.0153	.4442	.8732	.3021	.7311	.1600	.5889	.4468
939	.8707	.2997	.7286	.1576	.5865	.0154	.4444	.8733	.3023	.7312	.1601	.5891	.4470
942	.8709	.2998	.7287	.1577	.5866	.0156	.4445	.8734	.3024	.7313	.1603	.5892	.4471
428945	15.8710	16.2999	16.7289	17.1578	17.5867	18.0157	18.4446	18.8736	19.3025	19.7315	20.1604	20.5894	21.4473
948	.8711	.3000	.7290	.1579	.5869	.0158	.4448	.8737	.3027	.7316	.1606	.5895	.4474
951	.8712	.3001	.7291	.1580	.5870	.0159	.4449	.8738	.3028	.7317	.1607	.5896	.4476
954	.8713	.3003	.7292	.1582	.5871	.0161	.4450	.8740	.3029	.7319	.1608	.5898	.4477
957	.8714	.3004	.7293	.1583	.5872	.0162	.4452	.8741	.3031	.7320	.1610	.5899	.4479
428960	15.8715	16.3005	16.7294	17.1584	17.5874	18.0163	18.4453	18.8742	19.3032	19.7322	20.1611	20.5901	21.4480
963	.8716	.3006	.7296	.1585	.5875	.0164	.4454	.8744	.3033	.7323	.1613	.5902	.4482
966	.8717	.3007	.7297	.1586	.5876	.0166	.4455	.8745	.3035	.7324	.1614	.5904	.4483
969	.8719	.3008	.7298	.1588	.5877	.0167	.4457	.8746	.3036	.7326	.1615	.5905	.4485
972	.8720	.3009	.7299	.1589	.5879	.0168	.4458	.8748	.3037	.7327	.1617	.5907	.4486
428975	15.8721	16.3011	16.7300	17.1590	17.5880	18.0170	18.4459	18.8749	19.3039	19.7329	20.1618	20.5908	21.4488
978	.8722	.3012	.7301	.1591	.5881	.0171	.4461	.8750	.3040	.7330	.1620	.5909	.4489
981	.8723	.3013	.7303	.1592	.5882	.0172	.4462	.8752	.3041	.7331	.1621	.5911	.4491
984	.8724	.3014	.7304	.1594	.5883	.0173	.4463	.8753	.3043	.7333	.1622	.5912	.4492
987	.8725	.3015	.7305	.1595	.5885	.0175	.4464	.8754	.3044	.7334	.1624	.5914	.4494
428990	15.8726	16.3016	16.7306	17.1596	17.5886	18.0176	18.4466	18.8756	19.3046	19.7335	20.1625	20.5915	21.4495
993	.8727	.3017	.7307	.1597	.5887	.0177	.4467	.8757	.3047	.7337	.1627	.5917	.4497
996	.8729	.3018	.7308	.1598	.5888	.0178	.4468	.8758	.3048	.7338	.1628	.5918	.4498
999	.8730	.3020	.7310	.1600	.5890	.0180	.4470	.8760	.3050	.7340	.1630	.5920	.4500
429002	.8731	.3021	.7311	.1601	.5891	.0181	.4471	.8761	.3051	.7341	.1631	.5921	.4501
429005	15.8732	16.3022	16.7312	17.1602	17.5892	18.0182	18.4472	18.8762	19.3052	19.7342	20.1632	20.5922	21.4503
008	.8733	.3023	.7313	.1603	.5893	.0183	.4473	.8764	.3054	.7344	.1634	.5924	.4504
011	.8734	.3024	.7314	.1604	.5895	.0185	.4475	.8765	.3055	.7345	.1635	.5925	.4506
014	.8735	.3025	.7315	.1606	.5896	.0186	.4476	.8766	.3056	.7346	.1637	.5927	.4507
017	.8736	.3026	.7317	.1607	.5897	.0187	.4477	.8767	.3058	.7348	.1638	.5928	.4509
429020	15.8737	16.3028	16.7318	17.1608	17.5898	18.0188	18.4479	18.8769	19.3059	19.7349	20.1639	20.5930	21.4510
023	.8739	.3029	.7319	.1609	.5899	.0190	.4480	.8770	.3060	.7351	.1641	.5931	.4512
026	.8740	.3030	.7320	.1610	.5901	.0191	.4481	.8771	.3062	.7352	.1642	.5932	.4513
029	.8741	.3031	.7321	.1612	.5902	.0192	.4482	.8773	.3063	.7353	.1644	.5934	.4515
032	.8742	.3032	.7322	.1613	.5903	.0193	.4484	.8774	.3064	.7355	.1645	.5935	.4516
429035	15.8743	16.3033	16.7324	17.1614	17.5904	18.0195	18.4485	18.8775	19.3066	19.7356	20.1646	20.5937	21.4518
038	.8744	.3034	.7325	.1615	.5906	.0196	.4486	.8777	.3067	.7357	.1648	.5938	.4519
041	.8745	.3036	.7326	.1616	.5907	.0197	.4488	.8778	.3068	.7359	.1649	.5940	.4521
044	.8746	.3037	.7327	.1618	.5908	.0198	.4489	.8779	.3070	.7360	.1651	.5941	.4522
047	.8747	.3038	.7328	.1619	.5909	.0200	.4490	.8781	.3071	.7362	.1652	.5943	.4524
429050	15.8749	16.3039	16.7330	17.1620	17.5911	18.0201	18.4492	18.8782	19.3073	19.7363	20.1654	20.5944	21.4525
053	.8750	.3040	.7331	.1621	.5912	.0202	.4493	.8783	.3074	.7364	.1655	.5945	.4527
056	.8751	.3041	.7332	.1622	.5913	.0204	.4494	.8785	.3075	.7366	.1656	.5947	.4528
059	.8752	.3042	.7333	.1624	.5914	.0205	.4495	.8786	.3077	.7367	.1658	.5948	.4530
062	.8753	.3044	.7334	.1625	.5915	.0206	.4497	.8787	.3078	.7369	.1659	.5950	.4531
429065	15.8754	16.3045	16.7335	17.1626	17.5917	18.0207	18.4498	18.8789	19.3079	19.7370	20.1661	20.5951	21.4533
068	.8755	.3046	.7337	.1627	.5918	.0209	.4499	.8790	.3081	.7371	.1662	.5953	.4534
071	.8756	.3047	.7338	.1628	.5919	.0210	.4501	.8791	.3082	.7373	.1663	.5954	.4536
074	.8757	.3048	.7339	.1630	.5920	.0211	.4502	.8793	.3083	.7374	.1665	.5956	.4537
077	.8758	.3049	.7340	.1631	.5922	.0212	.4503	.8794	.3085	.7375	.1666	.5957	.4539
429080	15.8760	16.3050	16.7341	17.1632	17.5923	18.0214	18.4504	18.8795	19.3086	19.7377	20.1668	20.5958	21.4540
083	.8761	.3052	.7342	.1633	.5924	.0215	.4506	.8797	.3087	.7378	.1669	.5960	.4542
086	.8762	.3053	.7344	.1634	.5925	.0216	.4507	.8798	.3089	.7380	.1670	.5961	.4543
089	.8763	.3054	.7345	.1636	.5926	.0217	.4508	.8799	.3090	.7381	.1672	.5963	.4545
092	.8764	.3055	.7346	.1637	.5928	.0219	.4510	.8800	.3091	.7382	.1673	.5964	.4546
429095	15.8765	16.3056	16.7347	17.1638	17.5929	18.0220	18.4511	18.8802	19.3093	19.7384	20.1675	20.5966	21.4548
098	.8766	.3057	.7348	.1639	.5930	.0221	.4512	.8803	.3094	.7385	.1676	.5967	.4549
101	.8767	.3058	.7349	.1640	.5931	.0222	.4513	.8804	.3095	.7386	.1677	.5968	.4551
104	.8768	.3060	.7351	.1642	.5933	.0224	.4515	.8806	.3097	.7388	.1679	.5970	.4552
107	.8770	.3061	.7352	.1643	.5934	.0225	.4516	.8807	.3098	.7389	.1680	.5971	.4554
429110	15.8771	16.3062	16.7353	17.1644	17.5935	18.0226	18.4517	18.8808	19.3100	19.7391	20.1682	20.5973	21.4555
113	.8772	.3063	.7354	.1645	.5936	.0227	.4519	.8810	.3101	.7392	.1683	.5974	.4557
116	.8773	.3064	.7355	.1646	.5938	.0229	.4520	.8811	.3102	.7393	.1685	.5976	.4558
119	.8774	.3065	.7356	.1648	.5939	.0230	.4521	.8812	.3104	.7395	.1686	.5977	.4560
122	.8775	.3066	.7358	.1649	.5940	.0231	.4522	.8814	.3105	.7396	.1687	.5979	.4561
429125	15.8776	16.3068	16.7359	17.1650	17.5941	18.0233	18.4524	18.8815	19.3106	19.7398	20.1689	20.5980	21.4563
128	.8777	.3069	.7360	.1651	.5942	.0234	.4525	.8816	.3108	.7399	.1690	.5981	.4564
131	.8778	.3070	.7361	.1652	.5944	.0235	.4526	.8818	.3109	.7400	.1692	.5983	.4566
134	.8780	.3071	.7362	.1654	.5945	.0236	.4528	.8819	.3110	.7402	.1693	.5984	.4567
137	.8781	.3072	.7363	.1655	.5946	.0238	.4529	.8820	.3112	.7403	.1694	.5986	.4569
429140	15.8782	16.3073	16.7365	17.1656	17.5947	18.0239	18.4530	18.8822	19.3113	19.7404	20.1696	20.5987	21.4570
143	.8783	.3074	.7366	.1657	.5949	.0240	.4531	.8823	.3114	.7406	.1697	.5989	.4572
146	.8784	.3075	.7367	.1658	.5950	.0241	.4533	.8824	.3116	.7407	.1699	.5990	.4573
149	.8785	.3077	.7368	.1660	.5951	.0243	.4534	.8826	.3117	.7409	.1700	.5992	.4575
152	.8786	.3078	.7369	.1661	.5952	.0244	.4535	.8827	.3118	.7410	.1701	.5993	.4576
429155	15.8787	16.3079	16.7370	17.1662	17.5954	18.0245	18.4537	18.8828	19.3120	19.7411	20.1703	20.5994	21.4578
158	.8788	.3080	.7372	.1663	.5955	.0246	.4538	.8830	.3121	.7413	.1704	.5996	.4579
161	.8790	.3081	.7373	.1664	.5956	.0248	.4539	.8831	.3122	.7414	.1706	.5997	.4581
164	.8791	.3082	.7374	.1666	.5957	.0249	.4541	.8832	.3124	.7415	.1707	.5999	.4582
167	.8792	.3083	.7375	.1667	.5958	.0250	.4542	.8833	.3125	.7417	.1708	.6000	.4584
429170	15.8793	16.3085	16.7376	17.1668	17.5960	18.0251	18.4543	18.8835	19.3127	19.7418	20.1710	20.6002	21.4585
173	.8794	.3086	.7377	.1669	.5961	.0253	.4544	.8836	.3128	.7420	.1711	.6003	.4587
176	.8795	.3087	.7379	.1670	.5962	.0254	.4546	.8837	.3129	.7421	.1713	.6004	.4588
179	.8796	.3088	.7380	.1672	.5963	.0255	.4547	.8839	.3131	.7422	.1714	.6006	.4590
182	.8797	.3089	.7381	.1673	.5965	.0256	.4548	.8840	.3132	.7424	.1716	.6007	.4591
429185	15.8798	16.3090	16.7382	17.1674	17.5966	18.0258	18.4550	18.8841	19.3133	19.7425	20.1717	20.6009	21.4593
188	.8800	.3091	.7383	.1675	.5967	.0259	.4551	.8843	.3135	.7426	.1718	.6010	.4594
191	.8801	.3093	.7384	.1676	.5968	.0260	.4552	.8844	.3136	.7428	.1720	.6012	.4596
194	.8802	.3094	.7386	.1678	.5970	.0261	.4553	.8845	.3137	.7429	.1721	.6013	.4597
197	.8803	.3095	.7387	.1679	.5971	.0263	.4555	.8847	.3139	.7431	.1723	.6015	.4599
429200	15.8804	16.3096	16.7388	17.1680	17.5972	18.0264	18.4556	18.8848	19.3140	19.7432	20.1724	20.6016	21.4600

H A R M O N I C S

BASIC FREQ.	24	25	26	27	28	29	30	31	32	33	34	35	36
429200	10.3008	10.7300	11.1592	11.5884	12.0176	12.4468	12.8760	13.3052	13.7344	14.1636	14.5928	15.0220	15.4512
203	.3009	.7301	.1593	.5885	.0177	.4469	.8761	.3053	.7345	.1637	.5929	.0221	.4513
206	.3009	.7302	.1594	.5886	.0178	.4470	.8762	.3054	.7346	.1638	.5930	.0222	.4514
209	.3010	.7302	.1594	.5886	.0179	.4471	.8763	.3055	.7347	.1639	.5931	.0223	.4515
212	.3011	.7303	.1595	.5887	.0179	.4471	.8764	.3056	.7348	.1640	.5932	.0224	.4516
429215	10.3012	10.7304	11.1596	11.5888	12.0180	12.4472	12.8765	13.3057	13.7349	14.1641	14.5933	15.0225	15.4517
218	.3012	.7305	.1597	.5889	.0181	.4473	.8765	.3058	.7350	.1642	.5934	.0226	.4518
221	.3013	.7305	.1597	.5890	.0182	.4474	.8766	.3059	.7351	.1643	.5935	.0227	.4520
224	.3014	.7306	.1598	.5890	.0183	.4475	.8767	.3059	.7352	.1644	.5936	.0228	.4521
227	.3014	.7307	.1599	.5891	.0184	.4476	.8768	.3060	.7353	.1645	.5937	.0229	.4522
429230	10.3015	10.7308	11.1600	11.5892	12.0184	12.4477	12.8769	13.3061	13.7354	14.1646	14.5938	15.0231	15.4523
233	.3016	.7308	.1601	.5893	.0185	.4478	.8770	.3062	.7355	.1647	.5939	.0232	.4524
236	.3017	.7309	.1601	.5894	.0186	.4478	.8771	.3063	.7356	.1648	.5940	.0233	.4525
239	.3017	.7310	.1602	.5895	.0187	.4479	.8772	.3064	.7356	.1649	.5941	.0234	.4526
242	.3018	.7311	.1603	.5895	.0188	.4480	.8773	.3065	.7357	.1650	.5942	.0235	.4527
429245	10.3019	10.7311	11.1604	11.5896	12.0189	12.4481	12.8774	13.3066	13.7358	14.1651	14.5943	15.2036	15.4528
248	.3020	.7312	.1604	.5897	.0189	.4482	.8774	.3067	.7359	.1652	.5944	.0237	.4529
251	.3020	.7313	.1605	.5898	.0190	.4483	.8775	.3068	.7360	.1653	.5945	.0238	.4530
254	.3021	.7314	.1606	.5899	.0191	.4484	.8776	.3069	.7361	.1654	.5946	.0239	.4531
257	.3022	.7314	.1607	.5899	.0192	.4485	.8777	.3070	.7362	.1655	.5947	.0240	.4533
429260	10.3022	10.7315	11.1608	11.5900	12.0193	12.4485	12.8778	13.3071	13.7363	14.1656	14.5948	15.0241	15.4534
263	.3023	.7316	.1608	.5901	.0194	.4486	.8779	.3072	.7364	.1657	.5949	.0242	.4535
366	.3024	.7317	.1609	.5902	.0194	.4487	.8780	.3072	.7365	.1658	.5950	.0243	.4536
269	.3025	.7317	.1610	.5903	.0195	.4488	.8781	.3073	.7366	.1659	.5951	.0244	.4537
272	.3025	.7318	.1611	.5903	.0196	.4489	.8782	.3074	.7367	.1660	.5952	.0245	.4538
429275	10.3026	10.7319	11.1612	11.5904	12.0197	12.4490	12.8783	13.3075	13.7368	14.1661	14.5954	15.0246	15.4539
278	.3027	.7320	.1612	.5905	.0198	.4491	.8783	.3076	.7369	.1662	.5955	.0247	.4540
281	.3027	.7320	.1613	.5906	.0199	.4491	.8784	.3077	.7370	.1663	.5956	.0248	.4541
284	.3028	.7321	.1614	.5907	.0200	.4492	.8785	.3078	.7371	.1664	.5957	.0249	.4542
287	.3029	.7322	.1615	.5907	.0200	.4493	.8786	.3079	.7372	.1665	.5958	.0250	.4543
429290	10.3030	10.7323	11.1615	11.5908	12.0201	12.4494	12.8787	13.3080	13.7373	14.1666	14.5959	15.0252	15.4544
293	.3030	.7323	.1616	.5909	.0202	.4495	.8788	.3081	.7374	.1667	.5960	.0253	.4545
296	.3031	.7324	.1617	.5910	.0203	.4496	.8789	.3082	.7375	.1668	.5961	.0254	.4547
299	.3032	.7325	.1618	.5911	.0204	.4497	.8790	.3083	.7376	.1669	.5962	.0255	.4548
302	.3032	.7326	.1619	.5912	.0205	.4498	.8791	.3084	.7377	.1670	.5963	.0256	.4549
429305	10.3033	10.7326	11.1619	11.5912	12.0205	12.4498	12.8792	13.3085	13.7378	14.1671	14.5964	15.0257	15.4550
308	.3034	.7327	.1620	.5913	.0206	.4499	.8792	.3085	.7379	.1672	.5965	.0258	.4551
311	.3035	.7328	.1621	.5914	.0207	.4500	.8793	.3086	.7380	.1673	.5966	.0259	.4552
314	.3035	.7329	.1622	.5915	.0208	.4501	.8794	.3087	.7380	.1674	.5967	.0260	.4553
317	.3036	.7329	.1622	.5916	.0209	.4502	.8795	.3088	.7381	.1675	.5968	.0261	.4554
429320	10.3037	10.7330	11.1623	11.5916	12.0210	12.4503	12.8796	13.3089	13.7382	14.1676	14.5969	15.0262	15.4555
323	.3038	.7331	.1624	.5917	.0210	.4504	.8797	.3090	.7383	.1677	.5970	.0263	.4556
326	.3038	.7332	.1625	.5918	.0211	.4505	.8798	.3091	.7384	.1678	.5971	.0264	.4557
329	.3039	.7332	.1626	.5919	.0212	.4505	.8799	.3092	.7385	.1679	.5972	.0265	.4558
332	.3040	.7333	.1626	.5920	.0213	.4506	.8800	.3093	.7386	.1680	.5973	.0266	.4560
429335	10.3040	10.7334	11.1627	11.5920	12.0214	12.4507	12.8801	13.3094	13.7387	14.1681	14.5974	15.0267	15.4561
338	.3041	.7335	.1628	.5921	.0215	.4508	.8801	.3095	.7388	.1682	.5975	.0268	.4562
341	.3042	.7335	.1629	.5922	.0215	.4509	.8802	.3096	.7389	.1683	.5976	.0269	.4563
344	.3043	.7336	.1629	.5923	.0216	.4510	.8803	.3097	.7390	.1684	.5977	.0270	.4564
347	.3043	.7337	.1630	.5924	.0217	.4511	.8804	.3098	.7391	.1685	.5978	.0271	.4565
429350	10.3044	10.7338	11.1631	11.5925	12.0218	12.4512	12.8805	13.3099	13.7392	14.1686	14.4979	15.0273	15.4566
353	.3045	.7338	.1632	.5925	.0219	.4512	.8806	.3099	.7393	.1686	.5980	.0274	.4567
356	.3045	.7339	.1633	.5926	.0220	.4513	.8807	.3100	.7394	.1687	.5981	.0275	.4568
359	.3046	.7340	.1633	.5927	.0221	.4514	.8808	.3101	.7395	.1688	.5982	.0276	.4569
362	.3047	.7341	.1634	.5928	.0221	.4515	.8809	.3102	.7396	.1689	.5983	.0277	.4570
429365	10.3048	10.7341	11.1635	11.5929	12.0222	12.4516	12.8810	13.3103	13.7397	14.1690	14.5984	15.0278	15.4571
368	.3048	.7342	.1636	.5929	.0223	.4517	.8810	.3104	.7398	.1691	.5985	.0279	.4572
371	.3049	.7343	.1636	.5930	.0224	.4518	.8811	.3105	.7399	.1692	.5986	.0280	.4574
374	.3050	.7344	.1637	.5931	.0225	.4518	.8812	.3106	.7400	.1693	.5987	.0281	.4575
377	.3050	.7344	.1638	.5932	.0226	.4519	.8813	.3107	.7401	.1694	.5988	.0282	.4576
429380	10.3051	10.7345	11.1639	11.5933	12.0226	12.4520	12.8814	13.3108	13.7402	14.1695	14.5989	15.0283	15.4577
383	.3052	.7346	.1640	.5933	.0227	.4521	.8815	.3109	.7403	.1696	.5990	.0284	.4578
386	.3053	.7347	.1640	.5934	.0228	.4522	.8816	.3110	.7404	.1697	.5991	.0285	.4579
389	.3053	.7347	.1641	.5935	.0229	.4523	.8817	.3111	.7404	.1698	.5992	.0286	.4580
392	.3054	.7348	.1642	.5936	.0230	.4524	.8818	.3112	.7405	.1699	.5993	.0287	.4581
429395	10.3055	10.7349	11.1643	11.5937	12.0231	12.4525	12.8819	13.3112	13.7406	14.1700	14.5994	15.0288	15.4582
398	.3056	.7350	.1643	.5937	.0231	.4525	.8819	.3113	.7407	.1701	.5995	.0289	.4583
401	.3056	.7350	.1644	.5938	.0232	.4526	.8820	.3114	.7408	.1702	.5996	.0290	.4584
404	.3057	.7351	.1645	.5939	.0233	.4527	.8821	.3115	.7409	.1703	.5997	.0291	.4585
407	.3058	.7352	.1646	.5940	.0234	.4528	.8822	.3116	.7410	.1704	.5998	.0292	.4587
429410	10.3058	10.7353	11.1647	11.5941	12.0235	12.4529	12.8823	13.3117	13.7411	14.1705	14.5999	15.0294	15.4588
413	.3059	.7353	.1647	.5942	.0236	.4530	.8824	.3118	.7412	.1706	.6000	.0295	.4589
416	.3060	.7354	.1648	.5942	.0236	.4531	.8825	.3119	.7413	.1707	.6001	.0296	.4590
419	.3061	.7355	.1649	.5943	.0237	.4532	.8826	.3120	.7414	.1708	.6002	.0297	.4591
422	.3061	.7356	.1650	.5944	.0238	.4532	.8827	.3121	.7415	.1709	.6003	.0298	.4592
429425	10.3062	10.7356	11.1651	11.5945	12.0239	12.4533	12.8828	13.3122	13.7416	14.1710	14.6005	15.0299	15.4593
428	.3063	.7357	.1651	.5946	.0240	.4534	.8828	.3123	.7417	.1711	.6006	.0300	.4594
431	.3063	.7358	.1652	.5946	.0241	.4535	.8829	.3124	.7418	.1712	.6007	.0301	.4595
434	.3064	.7359	.1653	.5947	.0242	.4536	.8830	.3125	.7419	.1713	.6008	.0302	.4596
437	.3065	.7359	.1654	.5948	.0242	.4537	.8831	.3125	.7420	.1714	.6009	.0303	.4597
429440	10.3066	10.7360	11.1654	11.5949	12.0243	12.4538	12.8832	13.3126	13.7421	14.1715	14.6010	15.0304	15.4598
443	.3066	.7361	.1655	.5950	.0244	.4538	.8833	.3127	.7422	.1716	.6011	.0305	.4599
446	.3067	.7362	.1656	.5950	.0245	.4539	.8834	.3128	.7423	.1717	.6012	.0306	.4601
449	.3068	.7362	.1657	.5951	.0246	.4540	.8835	.3129	.7424	.1718	.6013	.0307	.4602
452	.3068	.7363	.1658	.5952	.0247	.4541	.8836	.3130	.7425	.1719	.6014	.0308	.4603
429455	10.3069	10.7364	11.1658	11.5953	12.0247	12.4542	12.8837	13.3131	13.7426	14.1720	14.6015	15.0309	15.4604
458	.3070	.7365	.1659	.5954	.0248	.4543	.8837	.3132	.7427	.1721	.6016	.0310	.4605
461	.3071	.7365	.1660	.5954	.0249	.4544	.8838	.3133	.7428	.1722	.6017	.0311	.4606
464	.3071	.7366	.1661	.5955	.0250	.4545	.8839	.3134	.7428	.1723	.6018	.0312	.4607
467	.3072	.7367	.1661	.5956	.0251	.4545	.8840	.3135	.7429	.1724	.6019	.0313	.4608
429470	10.3073	10.7368	11.1662	11.5957	12.0252	12.4546	12.8841	13.3136	13.7430	14.1725	14.6020	15.0315	15.4609
473	.3074	.7368	.1663	.5958	.0252	.4547	.8842	.3137	.7431	.1726	.6021	.0316	.4610
476	.3074	.7369	.1664	.5959	.0253	.4548	.8843	.3138	.7432	.1727	.6022	.0317	.4611
479	.3075	.7370	.1665	.5959	.0254	.4549	.8844	.3138	.7433	.1728	.6023	.0318	.4612
482	.3076	.7371	.1665	.5960	.0255	.4550	.8845	.3139	.7434	.1729	.6024	.0319	.4614
429485	10.3076	10.7371	11.1666	11.5961	12.0256	12.4551	12.8846	13.3140	13.7435	14.1730	14.6025	15.0320	15.4615
488	.3077	.7372	.1667	.5962	.0257	.4552	.8846	.3141	.7436	.1731	.6026	.0321	.4616
491	.3078	.7373	.1668	.5963	.0257	.4552	.8847	.3142	.7437	.1732	.6027	.0322	.4617
494	.3079	.7374	.1668	.5963	.0258	.4553	.8848	.3143	.7438	.1733	.6028	.0323	.4618
497	.3079	.7374	.1669	.5964	.0259	.4554	.8849	.3144	.7439	.1734	.6029	.0324	.4619
429500	10.3080	10.7375	11.1670	11.5965	12.0260	12.4555	12.8850	13.3145	13.7440	14.1735	14.6030	15.0325	15.4620

MEGACYCLES PER SECOND

HARMONICS

BASIC FREQ.	37	38	39	40	41	42	43	44	45	46	47	48	50
429200	15.8804	16.3096	16.7388	17.1680	17.5972	18.0264	18.4556	18.8848	19.3140	19.7432	20.1724	20.6016	21.4600
203	.8805	.3097	.7389	.1681	.5973	.0265	.4557	.8849	.3141	.7433	.1725	.6017	.4602
206	.8806	.3098	.7390	.1682	.5974	.0267	.4559	.8851	.3143	.7435	.1727	.6019	.4603
209	.8807	.3099	.7392	.1684	.5976	.0268	.4560	.8852	.3144	.7436	.1728	.6020	.4605
212	.8808	.3101	.7393	.1685	.5977	.0269	.4561	.8853	.3145	.7438	.1730	.6022	.4606
429215	15.8810	16.3102	16.7394	17.1686	17.5978	18.0270	18.4562	18.8855	19.3147	19.7439	20.1731	20.6023	21.4608
218	.8811	.3103	.7395	.1687	.5979	.0272	.4564	.8856	.3148	.7440	.1732	.6025	.4609
221	.8812	.3104	.7396	.1688	.5981	.0273	.4565	.8857	.3149	.7442	.1734	.6026	.4611
224	.8813	.3105	.7397	.1690	.5982	.0274	.4566	.8859	.3151	.7443	.1735	.6028	.4612
227	.8814	.3106	.7399	.1691	.5983	.0275	.4568	.8860	.3152	.7444	.1737	.6029	.4614
429230	15.8815	16.3107	16.7400	17.1692	17.5984	18.0277	18.4569	18.8861	19.3154	19.7446	20.1738	20.6030	21.4615
233	.8816	.3109	.7401	.1693	.5986	.0278	.4570	.8863	.3155	.7447	.1740	.6032	.4617
236	.8817	.3110	.7402	.1694	.5987	.0279	.4571	.8864	.3156	.7449	.1741	.6033	.4618
239	.8818	.3111	.7403	.1696	.5988	.0280	.4573	.8865	.3158	.7450	.1742	.6035	.4620
242	.8820	.3112	.7404	.1697	.5989	.0282	.4574	.8866	.3159	.7451	.1744	.6036	.4621
429245	15.8821	16.3113	16.7406	17.1698	17.5990	18.0283	18.4575	18.8868	19.3160	19.7453	20.1745	20.6038	21.4623
248	.8822	.3114	.7407	.1699	.5992	.0284	.4577	.8869	.3162	.7454	.1747	.6039	.4624
251	.8823	.3115	.7408	.1700	.5993	.0285	.4578	.8870	.3163	.7455	.1748	.6040	.4626
254	.8824	.3117	.7409	.1702	.5994	.0287	.4579	.8872	.3164	.7457	.1749	.6042	.4627
257	.8825	.3118	.7410	.1703	.5995	.0288	.4581	.8873	.3166	.7458	.1751	.6043	.4629
429260	15.8826	16.3119	16.7411	17.1704	17.5997	18.0289	18.4582	18.8874	19.3167	19.7460	20.1752	20.6045	21.4630
263	.8827	.3120	.7413	.1705	.5998	.0290	.4583	.8876	.3168	.7461	.1754	.6046	.4632
266	.8828	.3121	.7414	.1706	.5999	.0292	.4584	.8877	.3170	.7462	.1755	.6048	.4633
269	.8830	.3122	.7415	.1708	.6000	.0293	.4586	.8878	.3171	.7464	.1756	.6049	.4635
272	.8831	.3123	.7416	.1709	.6002	.0294	.4587	.8880	.3172	.7465	.1758	.6051	.4636
429275	15.8832	16.3125	16.7417	17.1710	17.6003	18.0296	18.4588	18.8881	19.3174	19.7467	20.1759	20.6052	21.4638
278	.8833	.3126	.7418	.1711	.6004	.0297	.4590	.8882	.3175	.7468	.1761	.6053	.4639
281	.8834	.3127	.7420	.1712	.6005	.0298	.4591	.8884	.3176	.7469	.1762	.6055	.4641
284	.8835	.3128	.7421	.1714	.6006	.0299	.4592	.8885	.3178	.7471	.1763	.6056	.4642
287	.8836	.3129	.7422	.1715	.6008	.0301	.5493	.8886	.3179	.7472	.1765	.6058	.4644
429290	15.8837	16.3130	16.7423	17.1716	17.6009	18.0302	18.4595	18.8888	19.3181	19.7473	20.1766	20.6059	21.4645
293	.8838	.3131	.7424	.1717	.6010	.0303	.4596	.8889	.3182	.7475	.1768	.6061	.4647
296	.8840	.3132	.7425	.1718	.6011	.0304	.4597	.8890	.3183	.7476	.1769	.6062	.4648
299	.8841	.3134	.7427	.1720	.6013	.0306	.4599	.8892	.3185	.7478	.1771	.6064	.4650
302	.8842	.3135	.7428	.1721	.6014	.0307	.4600	.8893	.3186	.7479	.1772	.6065	.4651
429305	15.8843	16.3136	16.7429	17.1722	17.6015	18.0308	18.4601	18.8894	19.3187	19.7480	20.1773	20.6066	21.4653
308	.8844	.3137	.7430	.1723	.6016	.0309	.4602	.8896	.3189	.7482	.1775	.6068	.4654
311	.8845	.3138	.7431	.1724	.6018	.0311	.4604	.8897	.3190	.7483	.1776	.6069	.4656
314	.8846	.3139	.7432	.1726	.6019	.0312	.4605	.8898	.3191	.7484	.1778	.6071	.4657
317	.8847	.3140	.7434	.1727	.6020	.0313	.4606	.8899	.3193	.7486	.1779	.6072	.4659
429320	15.8848	16.3142	16.7435	17.1728	17.6021	18.0314	18.4608	18.8901	19.3194	19.7487	20.1780	20.6074	21.4660
323	.8850	.3143	.7436	.1729	.6022	.0316	.4609	.8902	.3195	.7489	.1782	.6075	.4662
326	.8851	.3144	.7437	.1730	.6024	.0317	.4610	.8903	.3197	.7490	.1783	.6076	.4663
329	.8852	.3145	.7438	.1732	.6025	.0318	.4611	.8905	.3198	.7491	.1785	.6078	.4665
332	.8853	.3146	.7439	.1733	.6026	.0319	.4613	.8906	.3199	.7493	.1786	.6079	.4666
429335	15.8854	16.3147	16.7441	17.1734	17.6027	18.0321	18.4614	18.8907	19.3201	19.7494	20.1787	20.6081	21.4668
338	.8855	.3148	.7442	.1735	.6029	.0322	.4615	.8909	.3202	.7495	.1789	.6082	.4669
341	.8856	.3150	.7443	.1736	.6030	.0323	.4617	.8910	.3203	.7497	.1790	.6084	.4671
344	.8857	.3151	.7444	.1738	.6031	.0324	.4618	.8911	.3205	.7498	.1792	.6085	.4672
347	.8858	.3152	.7445	.1739	.6032	.0326	.4619	.8913	.3206	.7500	.1793	.6087	.4674
429350	15.8860	16.3153	16.7447	17.1740	17.6034	18.0327	18.4621	18.8914	19.3208	19.7501	20.1795	20.6088	21.4675
353	.8861	.3154	.7448	.1741	.6035	.0328	.4622	.8915	.3209	.7502	.1796	.6089	.4677
356	.8862	.3155	.7449	.1742	.6036	.0330	.4623	.8917	.3210	.7504	.1797	.6091	.4678
359	.8863	.3156	.7450	.1744	.6037	.0331	.4624	.8918	.3212	.7505	.1799	.6092	.4680
362	.8864	.3158	.7451	.1745	.6038	.0332	.4626	.8919	.3213	.7507	.1800	.6094	.4681
429365	15.8865	16.3159	16.7452	17.1746	16.6040	18.0333	18.4627	18.8921	19.3214	19.7508	20.1802	20.6095	21.4683
368	.8866	.3160	.7454	.1747	.6041	.0335	.4628	.8922	.3216	.7509	.1803	.6097	.4684
371	.8867	.3161	.7455	.1748	.6042	.0336	.4630	.8923	.3217	.7511	.1804	.6098	.4686
374	.8868	.3162	.7456	.1750	.6043	.0337	.4631	.8925	.3218	.7512	.1806	.6100	.4687
377	.8869	.3163	.7457	.1751	.6045	.0338	.4632	.8926	.3220	.7513	.1807	.6101	.4689
429380	15.8871	16.3164	16.7458	17.1752	17.6046	18.0340	18.4633	18.8927	19.3221	19.7515	20.1809	20.6102	21.4690
383	.8872	.3166	.7459	.1753	.6047	.0341	.4635	.8929	.3222	.7516	.1810	.6104	.4692
386	.8873	.3167	.7461	.1754	.6048	.0342	.4636	.8930	.3224	.7518	.1811	.6105	.4693
389	.8874	.3168	.7462	.1756	.6049	.0343	.4637	.8931	.3225	.7519	.1813	.6107	.4695
392	.8875	.3169	.7463	.1757	.6051	.0345	.4639	.8932	.3226	.7520	.1814	.6108	.4696
429395	15.8876	16.3170	16.7464	17.1758	17.6052	18.0346	18.4640	18.8934	19.3228	19.7522	20.1816	20.6110	21.4698
398	.8877	.3171	.7465	.1759	.6053	.0347	.4641	.8935	.3229	.7523	.1817	.6111	.4699
401	.8878	.3172	.7466	.1760	.6054	.0348	.4642	.8936	.3230	.7524	.1818	.6112	.4701
404	.8879	.3174	.7468	.1762	.6056	.0350	.4644	.8938	.3232	.7526	.1820	.6114	.4702
407	.8881	.3175	.7469	.1763	.6057	.0351	.4645	.8939	.3233	.7527	.1821	.6115	.4704
429410	15.8882	16.3176	16.7470	17.1764	17.6058	18.0352	18.4646	18.8940	19.3235	19.7529	20.1823	20.6117	21.4705
413	.8883	.3177	.7471	.1765	.6059	.0353	.4648	.8942	.3236	.7530	.1824	.6118	.4707
416	.8884	.3178	.7472	.1766	.6061	.0355	.4649	.8943	.3237	.7531	.1826	.6120	.4708
419	.8885	.3179	.7473	.1768	.6062	.0356	.4650	.8944	.3239	.7533	.1827	.6121	.4710
422	.8886	.3180	.7475	.1769	.6063	.0357	.4651	.8946	.3240	.7534	.1828	.6123	.4711
429425	15.8887	16.3182	16.7476	17.1770	17.6064	18.0359	18.4653	18.8947	19.3241	19.7536	20.1830	20.6124	21.4713
428	.8888	.3183	.7477	.1771	.6065	.0360	.4654	.8948	.3243	.7537	.1831	.6125	.4714
431	.8889	.3184	.7478	.1772	.6067	.0361	.4655	.8950	.3244	.7538	.1833	.6127	.4716
434	.8891	.3185	.7479	.1774	.6068	.0362	.4657	.8951	.3245	.7540	.1834	.6128	.4717
437	.8892	.3186	.7480	.1775	.6069	.0364	.4658	.8952	.3247	.7541	.1835	.6130	.4719
429440	15.8893	16.3187	16.7482	17.1776	17.6070	18.0365	18.4659	18.8954	19.3248	19.7542	20.1837	20.6131	21.4720
443	.8894	.3188	.7483	.1777	.6072	.0366	.4660	.8955	.3249	.7544	.1838	.6133	.4722
446	.8895	.3189	.7484	.1778	.6073	.0367	.4662	.8956	.3251	.7545	.1840	.6134	.4723
449	.8896	.3191	.7485	.1780	.6074	.0369	.4663	.8958	.3252	.7547	.1841	.6136	.4725
452	.8897	.3192	.7486	.1781	.6075	.0370	.4664	.8959	.3253	.7548	.1842	.6137	.4726
429455	15.8898	16.3193	16.7487	17.1782	17.6077	18.0371	18.4666	18.8960	19.3255	19.7549	20.1844	20.6138	21.4728
458	.8899	.3194	.7489	.1783	.6078	.0372	.4667	.8962	.3256	.7551	.1845	.6140	.4729
461	.8901	.3195	.7490	.1784	.6079	.0374	.4668	.8963	.3257	.7552	.1847	.6141	.4731
464	.8902	.3196	.7491	.1786	.6080	.0375	.4670	.8964	.3259	.7553	.1848	.6143	.4732
467	.8903	.3197	.7492	.1787	.6081	.0376	.4671	.8965	.3260	.7555	.1849	.6144	.4734
429470	15.8904	16.3199	16.7493	17.1788	17.6083	18.0377	18.4672	18.8967	19.3262	19.7556	20.1851	20.6146	21.4735
473	.8905	.3200	.7494	.1789	.6084	.0379	.4673	.8968	.3263	.7558	.1852	.6147	.4737
476	.8906	.3201	.7496	.1790	.6085	.0380	.4675	.8969	.3264	.7559	.1854	.6148	.4738
479	.8907	.3202	.7497	.1792	.6086	.0381	.4676	.8971	.3266	.7560	.1855	.6150	.4740
482	.8908	.3203	.7498	.1793	.6088	.0382	.4677	.8972	.3267	.7562	.1857	.6151	.4741
429485	15.8909	16.3204	16.7499	17.1794	17.6089	18.0384	18.4679	18.8973	19.3268	19.7563	20.1858	20.6153	21.4743
488	.8911	.3205	.7500	.1795	.6090	.0385	.4680	.8975	.3270	.7564	.1859	.6154	.4744
491	.8912	.3207	.7501	.1796	.6091	.0386	.4681	.8976	.3271	.7566	.1861	.6156	.4746
494	.8913	.3208	.7503	.1798	.6093	.0387	.4682	.8977	.3272	.7567	.1862	.6157	.4747
497	.8914	.3209	.7504	.1799	.6094	.0389	.4684	.8979	.3274	.7569	.1864	.6159	.4749
429500	15.8915	16.3210	16.7505	17.1800	17.6095	18.0390	18.4685	18.8980	19.3275	19.7570	20.1865	20.6160	21.4750

HARMONICS

BASIC FREQ.	24	25	26	27	28	29	30	31	32	33	34	35	36
429500	10.3080	10.7375	11.1670	11.5965	12.0260	12.4555	12.8850	13.3145	13.7440	14.1735	14.6030	15.0325	15.4620
503	.3081	.7376	.1671	.5966	.0261	.4556	.8851	.3146	.7441	.1736	.6031	.0326	.4621
506	.3081	.7377	.1672	.5967	.0262	.4557	.8852	.3147	.7442	.1737	.6032	.0327	.4622
509	.3082	.7377	.1672	.5967	.0263	.4558	.8853	.3148	.7443	.1738	.6033	.0328	.4623
512	.3083	.7378	.1673	.5968	.0263	.4558	.8854	.3149	.7444	.1739	.6034	.0329	.4624
429515	10.3084	10.7379	11.1674	11.5969	12.0264	12.4559	12.8855	13.3150	13.7445	14.1740	14.6035	15.0330	15.4625
518	.3084	.7380	.1675	.5970	.0265	.4560	.8855	.3151	.7446	.1741	.6036	.0331	.4626
521	.3085	.7380	.1675	.5971	.0266	.4561	.8856	.3152	.7447	.1742	.6037	.0332	.4628
524	.3086	.7381	.1676	.5971	.0267	.4562	.8857	.3152	.7448	.1743	.6038	.0333	.4629
527	.3086	.7382	.1677	.5972	.0268	.4563	.8858	.3153	.7449	.1744	.6039	.0334	.4630
429530	10.3087	10.7383	11.1678	11.5973	12.0268	12.4564	12.8859	13.3154	13.7450	14.1745	14.6040	15.0336	15.4631
533	.3088	.7383	.1679	.5974	.0269	.4565	.8860	.3155	.7451	.1746	.6041	.0337	.4632
536	.3089	.7384	.1679	.5975	.0270	.4565	.8861	.3156	.7452	.1747	.6042	.0338	.4633
539	.3089	.7385	.1680	.5976	.0271	.4566	.8862	.3157	.7452	.1748	.6043	.0339	.4634
542	.3090	.7386	.1681	.5976	.0272	.4567	.8863	.3158	.7453	.1749	.6044	.0340	.4635
429545	10.3091	10.7386	11.1682	11.5977	12.0273	12.4568	12.8864	13.3159	13.7454	14.1750	14.6045	15.0341	15.4636
548	.3092	.7387	.1682	.5978	.0273	.4569	.8864	.3160	.7455	.1751	.6046	.0342	.4637
551	.3092	.7388	.1683	.5979	.0274	.4570	.8865	.3161	.7456	.1752	.6047	.0343	.4638
554	.3093	.7389	.1684	.5980	.0275	.4571	.8866	.3162	.7457	.1753	.6048	.0344	.4639
557	.3094	.7389	.1685	.5980	.0276	.4572	.8867	.3163	.7458	.1754	.6049	.0345	.4641
429560	10.3094	10.7390	11.1686	11.5981	12.0277	12.4572	12.8868	13.3164	13.7459	14.1755	14.6050	15.0346	15.4642
563	.3095	.7391	.1686	.5982	.0278	.4573	.8869	.3165	.7460	.1756	.6051	.0347	.4643
566	.3096	.7392	.1687	.5983	.0278	.4574	.8860	.3165	.7461	.1757	.6052	.0348	.4644
569	.3097	.7392	.1688	.5984	.0279	.4575	.8871	.3166	.7462	.1758	.6053	.0349	.4645
572	.3097	.7393	.1689	.5984	.0280	.4576	.8872	.3167	.7463	.1759	.6054	.0350	.4646
429575	10.3098	10.7394	11.1690	11.5985	12.0281	12.4577	12.8873	13.3168	13.7464	14.1760	14.6056	15.0351	15.4647
578	.3099	.7395	.1690	.5986	.0282	.4578	.8873	.3169	.7465	.1761	.6057	.0352	.4648
581	.3099	.7395	.1691	.5987	.0283	.4578	.8874	.3170	.7466	.1762	.6058	.0353	.4649
584	.3100	.7396	.1692	.5988	.0284	.4579	.8875	.3171	.7467	.1763	.6059	.0354	.4650
587	.3101	.7397	.1693	.5988	.0284	.4580	.8876	.3172	.7468	.1764	.6060	.0355	.4651
429590	10.3102	10.7398	11.1693	11.5989	12.0285	12.4581	12.8877	13.3173	13.7469	14.1765	14.6061	15.0357	15.4652
593	.3102	.7398	.1694	.5990	.0286	.4582	.8878	.3174	.7470	.1766	.6062	.0358	.4653
596	.3103	.7399	.1695	.5991	.0287	.4583	.8879	.3175	.7471	.1767	.6063	.0359	.4655
599	.3104	.7400	.1696	.5992	.0288	.4584	.8880	.3176	.7472	.1768	.6064	.0360	.4656
602	.3104	.7401	.1697	.5993	.0289	.4585	.8881	.3177	.7473	.1769	.6065	.0361	.4657
429605	10.3105	10.7401	11.1697	11.5993	12.0289	12.4585	12.8882	13.3178	13.7474	14.1770	14.6066	15.0362	15.4658
608	.3106	.7402	.1698	.5994	.0290	.4586	.8882	.3178	.7475	.1771	.6067	.0363	.4659
611	.3107	.7403	.1699	.5995	.0291	.4587	.8883	.3179	.7476	.1772	.6068	.0364	.4660
614	.3107	.7404	.1700	.5996	.0292	.4588	.8884	.3180	.7476	.1773	.6069	.0365	.4661
617	.3108	.7404	.1700	.5997	.0293	.4589	.8885	.3181	.7477	.1774	.6070	.0366	.4662
429620	10.3109	10.7405	11.1701	11.5997	12.0294	12.4590	12.8886	13.3182	13.7478	14.1775	14.6071	15.0367	15.4663
623	.3110	.7406	.1702	.5998	.0294	.4591	.8887	.3183	.7479	.1776	.6072	.0368	.4664
626	.3110	.7407	.1703	.5999	.0295	.4592	.8888	.3184	.7480	.1777	.6073	.0369	.4665
629	.3111	.7407	.1704	.6000	.0296	.4592	.8889	.3185	.7481	.1778	.6074	.0370	.4666
632	.3112	.7408	.1704	.6001	.0297	.4593	.8890	.3186	.7482	.1779	.6075	.0371	.4668
429635	10.3112	10.7409	11.1705	11.6001	12.0298	12.4594	12.8891	13.3187	13.7483	14.1780	14.6076	15.0372	15.4669
638	.3113	.7410	.1706	.6002	.0299	.4595	.8891	.3188	.7484	.1781	.6077	.0373	.4670
641	.3114	.7410	.1707	.6003	.0299	.4596	.8892	.3189	.7485	.1782	.6078	.0374	.4671
644	.3115	.7411	.1707	.6004	.0300	.4597	.8893	.3190	.7486	.1783	.6079	.0375	.4672
647	.3115	.7412	.1708	.6005	.0301	.4598	.8894	.3191	.7487	.1784	.6080	.0376	.4673
429650	10.3116	10.7413	11.1709	11.6006	12.0302	12.4599	12.8895	13.3192	13.7488	14.1785	14.6081	15.0378	15.4674
653	.3117	.7413	.1710	.6006	.0303	.4599	.8896	.3192	.7489	.1785	.6082	.0379	.4675
656	.3117	.7414	.1711	.6007	.0304	.4600	.8897	.3193	.7490	.1786	.6083	.0380	.4676
659	.3118	.7415	.1711	.6008	.0305	.4601	.8898	.3194	.7491	.1787	.6084	.0381	.4677
662	.3119	.7416	.1712	.6009	.0305	.4602	.8899	.3195	.7492	.1788	.6085	.0382	.4678
429665	10.3120	10.7416	11.1713	11.6010	12.0306	12.4603	12.8900	13.3196	13.7493	14.1789	14.6086	15.0383	15.4679
668	.3120	.7417	.1714	.6010	.0307	.4604	.8900	.3197	.7494	.1790	.6087	.0384	.4680
671	.3121	.7418	.1714	.6011	.0308	.4605	.8901	.3198	.7495	.1791	.6088	.0385	.4682
674	.3122	.7419	.1715	.6012	.0309	.4605	.8902	.3199	.7496	.1792	.6089	.0386	.4683
677	.3122	.7419	.1716	.6013	.0310	.4606	.8903	.3200	.7497	.1793	.6090	.0387	.4684
429680	10.3123	10.7420	11.1717	11.6014	12.0310	12.4607	12.8904	13.3201	13.7498	14.1794	14.6091	15.0388	15.4685
683	.3124	.7421	.1718	.6014	.0311	.4608	.8905	.3202	.7499	.1795	.6092	.0389	.4686
686	.3125	.7422	.1718	.6015	.0312	.4609	.8906	.3203	.7500	.1796	.6093	.0390	.4687
689	.3125	.7422	.1719	.6016	.0313	.4610	.8907	.3204	.7500	.1797	.6094	.0391	.4688
692	.3126	.7423	.1720	.6017	.0314	.4611	.8908	.3205	.7501	.1798	.6095	.0392	.4689
429695	10.3127	10.7424	11.1721	11.6018	12.0315	12.4612	12.8909	13.3205	13.7502	14.1799	14.6096	15.0393	15.4690
698	.3128	.7425	.1721	.6018	.0315	.4612	.8909	.3206	.7503	.1800	.6097	.0394	.4691
701	.3128	.7425	.1722	.6019	.0316	.4613	.8910	.3207	.7504	.1801	.6098	.0395	.4692
704	.3129	.7426	.1723	.6020	.0317	.4614	.8911	.3208	.7505	.1802	.6099	.0396	.4693
707	.3130	.7427	.1724	.6021	.0318	.4615	.8912	.3209	.7506	.1803	.6100	.0397	.4695
429710	10.3130	10.7428	11.1725	11.6022	12.0319	12.4616	12.8913	13.3210	13.7507	14.1804	14.6101	15.0399	15.4696
713	.3131	.7428	.1725	.6023	.0320	.4617	.8914	.3211	.7508	.1805	.6102	.0400	.4697
716	.3132	.7429	.1726	.6023	.0320	.4618	.8915	.3212	.7509	.1806	.6103	.0401	.4698
719	.3133	.7430	.1727	.6024	.0321	.4619	.8916	.3213	.7510	.1807	.6104	.0402	.4699
722	.3133	.7431	.1728	.6025	.0322	.4619	.8917	.3214	.7511	.1808	.6105	.0403	.4700
429725	10.3134	10.7431	11.1729	11.6026	12.0323	12.4620	12.8918	13.3215	13.7512	14.1809	14.6107	15.0404	15.4701
728	.3135	.7432	.1729	.6027	.0324	.4621	.8918	.3216	.7513	.1810	.6108	.0405	.4702
731	.3135	.7433	.1730	.6027	.0325	.4622	.8919	.3217	.7514	.1811	.6109	.0406	.4703
734	.3136	.7434	.1731	.6028	.0326	.4623	.8920	.3218	.7515	.1812	.6110	.0407	.4704
737	.3137	.7434	.1732	.6029	.0326	.4624	.8921	.3218	.7516	.1813	.6111	.0408	.4705
429740	10.3138	10.7435	11.1732	11.6030	12.0327	12.4625	12.8922	13.3219	13.7517	14.1814	14.6112	15.0409	15.4706
743	.3138	.7436	.1733	.6031	.0328	.4625	.8923	.3220	.7518	.1815	.6113	.0410	.4707
746	.3139	.7437	.1734	.6031	.0329	.4626	.8924	.3221	.7519	.1816	.6114	.0411	.4709
749	.3140	.7437	.1735	.6032	.0330	.4627	.8925	.3222	.7520	.1817	.6115	.0412	.4710
752	.3140	.7438	.1736	.6033	.0331	.4628	.8926	.3223	.7521	.1818	.6116	.0413	.4711
429755	10.3141	10.7439	11.1736	11.6034	12.0331	12.4629	12.8927	13.3224	13.7522	14.1819	14.6117	15.0414	15.4712
758	.3142	.7440	.1737	.6035	.0332	.4630	.8927	.3225	.7523	.1820	.6118	.0415	.4713
761	.3143	.7440	.1738	.6035	.0333	.4631	.8928	.3226	.7524	.1821	.6119	.0416	.4714
764	.3143	.7441	.1739	.6036	.0334	.4632	.8929	.3227	.7524	.1822	.6120	.0417	.4715
767	.3144	.7442	.1739	.6037	.0335	.4632	.8930	.3228	.7525	.1823	.6121	.0418	.4716
429770	10.3145	10.7443	11.1740	11.6038	12.0336	12.4633	12.8931	13.3229	13.7526	14.1824	14.6122	15.0420	15.4717
773	.3146	.7443	.1741	.6039	.0336	.4634	.8932	.3230	.7527	.1825	.6123	.0421	.4718
776	.3146	.7444	.1742	.6040	.0337	.4635	.8933	.3231	.7528	.1826	.6124	.0422	.4719
779	.3147	.7445	.1743	.6040	.0338	.4636	.8934	.3231	.7529	.1827	.6125	.0423	.4720
782	.3148	.7446	.1743	.6041	.0339	.4637	.8935	.3232	.7530	.1828	.6126	.0424	.4722
429785	10.3148	10.7446	11.1744	11.6042	12.0340	12.4638	12.8936	13.3233	13.7531	14.1829	14.6127	15.0425	15.4723
788	.3149	.7447	.1745	.6043	.0341	.4639	.8936	.3234	.7532	.1830	.6128	.0426	.4724
791	.3150	.7448	.1746	.6044	.0341	.4639	.8937	.3235	.7533	.1831	.6129	.0427	.4725
794	.3151	.7449	.1746	.6044	.0342	.4640	.8938	.3236	.7534	.1832	.6130	.0428	.4726
797	.3151	.7449	.1747	.6045	.0343	.4641	.8939	.3237	.7535	.1833	.6131	.0429	.4727
429800	10.3152	10.7450	11.1748	11.6046	12.0344	12.4642	12.8940	13.3238	13.7536	14.1834	14.6132	15.0430	15.4728

MEGACYCLES PER SECOND

HARMONICS

BASIC FREQ.	37	38	39	40	41	42	43	44	45	46	47	48	50
429500	15.8915	16.3210	16.7505	17.1800	17.6095	18.0390	18.4685	18.8980	19.3275	19.7570	20.1865	20.6160	21.4750
503	.8916	.3211	.7506	.1801	.6096	.0391	.4686	.8981	.3276	.7571	.1866	.6161	.4752
506	.8917	.3212	.7507	.1802	.6097	.0393	.4688	.8983	.3278	.7573	.1868	.6163	.4753
509	.8918	.3213	.7509	.1804	.6099	.0394	.4689	.8984	.3279	.7574	.1869	.6164	.4755
512	.8919	.3215	.7510	.1805	.6100	.0395	.4690	.8985	.3280	.7576	.1871	.6166	.4756
429515	15.8921	16.3216	16.7511	17.1806	17.6101	18.0396	18.4691	18.8987	19.3282	19.7577	20.1872	20.6167	21.4758
518	.8922	.3217	.7512	.1807	.6102	.0398	.4693	.8988	.3283	.7578	.1873	.6169	.4759
521	.8923	.3218	.7513	.1808	.6104	.0399	.4694	.8989	.3284	.7580	.1875	.6170	.4761
524	.8924	.3219	.7514	.1810	.6105	.0400	.4695	.8991	.3286	.7581	.1876	.6172	.4762
527	.8925	.3220	.7516	.1811	.6106	.0401	.4697	.8992	.3287	.7582	.1878	.6173	.4764
429530	15.8926	16.3221	16.7517	17.1812	17.6107	18.0403	18.4698	18.8993	19.3289	19.7584	20.1879	20.6174	21.4765
533	.8927	.3223	.7518	.1813	.6109	.0404	.4699	.8995	.3290	.7585	.1881	.6176	.4767
536	.8928	.3224	.7519	.1814	.6110	.0405	.4700	.8996	.3291	.7587	.1882	.6177	.4768
539	.8929	.3225	.7520	.1816	.6111	.0406	.4702	.8997	.3293	.7588	.1883	.6179	.4770
542	.8931	.3226	.7521	.1817	.6112	.0408	.4703	.8998	.3294	.7589	.1885	.6180	.4771
429545	15.8932	16.3227	16.7523	17.1818	17.6113	18.0409	18.4704	18.9000	19.3295	19.7591	20.1886	20.6182	21.4773
548	.8933	.3228	.7524	.1819	.6115	.0410	.4706	.9001	.3297	.7592	.1888	.6183	.4774
551	.8934	.3229	.7525	.1820	.6116	.0411	.4707	.9002	.3298	.7593	.1889	.6184	.4776
554	.8935	.3231	.7526	.1822	.6117	.0413	.4708	.9004	.3299	.7595	.1890	.6186	.4777
557	.8936	.3232	.7527	.1823	.6118	.0414	.4710	.9005	.3301	.7596	.1892	.6187	.4779
429560	15.8937	16.3233	16.7528	17.1824	17.6120	18.0415	18.4711	18.9006	19.3302	19.7598	20.1893	20.6189	21.4780
563	.8938	.3234	.7530	.1825	.6121	.0416	.4712	.9008	.3303	.7599	.1895	.6190	.4782
566	.8939	.3235	.7531	.1826	.6122	.0418	.4713	.9009	.3305	.7600	.1896	.6192	.4783
569	.8941	.3236	.7532	.1828	.6123	.0419	.4715	.9010	.3306	.7602	.1897	.6193	.4785
572	.8942	.3237	.7533	.1829	.6125	.0420	.4716	.9012	.3307	.7603	.1899	.6195	.4786
429575	15.8943	16.3239	16.7534	17.1830	17.6126	18.0422	18.4717	18.9013	19.3309	19.7605	20.1900	20.6196	21.4788
578	.8944	.3240	.7535	.1831	.6127	.0423	.4719	.9014	.3310	.7606	.1902	.6197	.4789
581	.8945	.3341	.7537	.1832	.6128	.0424	.4720	.9016	.3311	.7607	.1903	.6199	.4791
584	.8946	.3242	.7538	.1834	.6129	.0425	.4721	.9017	.3313	.7609	.1904	.6200	.4792
587	.8947	.3243	.7539	.1835	.6131	.0427	.4722	.9018	.3314	.7610	.1906	.6202	.4794
429590	15.8948	16.3244	16.7540	17.1836	17.6132	18.0428	18.4724	18.9020	19.3316	19.7611	20.1907	20.6203	21.4795
593	.8949	.3245	.7541	.1837	.6133	.0429	.4725	.9021	.3317	.7613	.1909	.6205	.4797
596	.8951	.3246	.7542	.1838	.6134	.0430	.4726	.9022	.3318	.7614	.1910	.6206	.4798
599	.8952	.3248	.7544	.1840	.6136	.0432	.4728	.9024	.3320	.7616	.1912	.6208	.4800
602	.8953	.3249	.7545	.1841	.6137	.0433	.4729	.9025	.3321	.7617	.1913	.6209	.4801
429605	15.8954	16.3250	16.7546	17.1842	17.6138	18.0434	18.4730	18.9026	19.3322	19.7618	20.1914	20.6210	21.4803
608	.8955	.3251	.7547	.1843	.6139	.0435	.4731	.9028	.3324	.7620	.1916	.6212	.4804
611	.8956	.3252	.7548	.1844	.6141	.0437	.4733	.9029	.3325	.7621	.1917	.6213	.4806
614	.8957	.3253	.7549	.1846	.6142	.0438	.4734	.9030	.3326	.7622	.1919	.6215	.4807
617	.8958	.3254	.7551	.1847	.6143	.0439	.4735	.9031	.3328	.7624	.1920	.6216	.4809
429620	15.8959	16.3256	16.7552	17.1848	17.6144	18.0440	18.4737	18.9033	19.3329	19.7625	20.1921	20.6218	21.4810
623	.8961	.3257	.7553	.1849	.6145	.0442	.4738	.9034	.3330	.7627	.1923	.6219	.4812
626	.8962	.3258	.7554	.1850	.6147	.0443	.4739	.9035	.3332	.7628	.1924	.6220	.4813
629	.8963	.3259	.7555	.1852	.6148	.0444	.4740	.9037	.3333	.7629	.1926	.6222	.4815
632	.8964	.3260	.7556	.1853	.6149	.0445	.4742	.9038	.3334	.7631	.1927	.6223	.4816
429635	15.8965	16.3261	16.7558	17.1854	17.6150	18.0447	18.4743	18.9039	19.3336	19.7632	20.1928	20.6225	21.4818
638	.8966	.3262	.7559	.1855	.6152	.0448	.4744	.9041	.3337	.7633	.1930	.6226	.4819
641	.8967	.3264	.7560	.1856	.6153	.0449	.4746	.9042	.3338	.7635	.1931	.6228	4821
644	.8968	.3265	.7561	.1858	.6154	.0450	.4747	.9043	.3340	.7636	.1933	.6229	.4822
647	.8969	.3266	.7562	.1859	.6155	.0452	.4748	.9045	.3341	.7638	.1934	.6231	.4824
429650	15.8971	16.3267	16.7564	17.1860	17.6157	18.0453	18.4750	18.9046	19.3343	19.7639	20.1936	20.6232	21.4825
653	.8972	.3268	.7565	.1861	.6158	.0454	.4751	.9047	.3344	.7640	.1937	.6233	.4827
656	.8973	.3269	.7566	.1862	.6159	.0456	.4752	.9049	.3345	.7642	.1938	.6235	.4828
659	.8974	.3270	.7567	.1864	.6160	.0457	.4753	.9050	.3347	.7643	.1940	.6236	.4830
662	.8975	.3272	.7568	.1865	.6161	.0458	.4755	.9051	.3348	.7645	.1941	.6238	.4831
429665	15.8976	16.3273	16.7569	17.1866	17.6163	18.0459	18.4756	18.9053	19.3349	19.7646	20.1943	20.6239	21.4833
668	.8977	.3274	.7571	.1867	.6164	.0461	.4757	.9054	.3351	.7647	.1944	.6241	.4834
671	.8978	.3275	.7572	.1868	.6165	.0462	.4759	.9055	.3352	.7649	.1945	.6242	.4836
674	.8979	.3276	.7573	.1870	.6166	.0463	.4760	.9057	.3353	.7650	.1947	.6244	.4837
677	.8980	.3277	.7574	.1871	.6168	.0464	.4761	.9058	.3355	.7651	.1948	.6245	.4839
429680	15.8982	16.3278	16.7575	17.1872	17.6169	18.0466	18.4762	18.9059	19.3356	19.7653	20.1950	20.6246	21.4840
683	.8983	.3280	.7576	.1873	.6170	.0467	.4764	.9061	.3357	.7654	.1951	.6248	.4842
686	.8984	.3281	.7578	.1874	.6171	.0468	.4765	.9062	.3359	.7656	.1952	.6249	.4843
689	.8985	.3282	.7579	.1876	.6172	.0469	.4766	.9063	.3360	.7657	.1954	.6251	.4845
692	.8986	.3283	.7580	.1877	.6174	.0471	.4768	.9064	.3361	.7658	.1955	.6252	.4846
429695	15.8987	16.3284	16.7581	17.1878	17.6175	18.0472	18.4769	18.9066	19.3363	19.7660	20.1957	20.6254	21.4848
698	.8988	.3285	.7582	.1879	.6176	.0473	.4770	.9067	.3364	.7661	.1958	.6255	.4849
701	.8989	.3286	.7583	.1880	.6177	.0474	.4771	.9068	.3365	.7662	.1959	.6256	.4851
704	.8990	.3288	.7585	.1882	.6179	.0476	.4773	.9070	.3367	.7664	.1961	.6258	.4852
707	.8992	.3289	.7586	.1883	.6180	.0477	.4774	.9071	.3368	.7665	.1962	.6259	.4854
429710	15.8993	16.3290	16.7587	17.1884	17.6181	18.0478	18.4775	18.9072	19.3370	19.7667	20.1964	20.6261	21.4855
713	.8994	.3291	.7588	.1885	.6182	.0479	.4777	.9074	.3371	.7668	.1965	.6262	.4857
716	.8995	.3292	.7589	.1886	.6184	.0481	.4778	.9075	.3372	.7669	.1967	.6264	.4858
719	.8996	.3293	.7590	.1888	.6185	.0482	.4779	.9076	.3374	.7671	.1968	.6265	.4860
722	.8997	.3294	.7592	.1889	.6186	.0483	.4780	.9078	.3375	.7672	.1969	.6267	.4861
429725	15.8998	16.3296	16.7593	17.1890	17.6187	18.0485	18.4782	18.9079	19.3376	19.7674	20.1971	20.6268	21.4863
728	.8999	.3297	.7594	.1891	.6188	.0486	.4783	.9080	.3378	.7675	.1972	.6269	.4864
731	.9000	.3298	.7595	.1892	.6190	.0487	.4784	.9082	.3379	.7676	.1974	.6271	.4866
734	.9002	.3299	.7596	.1894	.6191	.0488	.4786	.9083	.3380	.7678	.1975	.6272	.4867
737	.9003	.3300	.7597	.1895	.6192	.0490	.4787	.9084	.3382	.7679	.1976	.6274	.4869
429740	15.9004	16.3301	16.7599	17.1896	17.6193	18.0491	18.4788	18.9086	19.3383	19.7680	20.1978	20.6275	21.4870
743	.9005	.3302	.7600	.1897	.6195	.0492	.4789	.9087	.3384	.7682	.1979	.6277	.4872
746	.9006	.3303	.7601	.1898	.6196	.0493	.4791	.9088	.3386	.7683	.1981	.6278	.4873
749	.9007	.3305	.7602	.1900	.6197	.0495	.4792	.9090	.3387	.7685	.1982	.6280	.4875
752	.9008	.3306	.7603	.1901	.6198	.0496	.4793	.9091	.3388	.7686	.1983	.6281	.4876
429755	15.9009	16.3307	16.7604	17.1902	17.6200	18.0497	18.4795	18.9092	19.3390	19.7687	20.1985	20.6282	21.4878
758	.9010	.3308	.7606	.1903	.6201	.0498	.4796	.9094	.3391	.7689	.1986	.6284	.4879
761	.9012	.3309	.7607	.1904	.6202	.0500	.4797	.9095	.3392	.7690	.1988	.6285	.4881
764	.9013	.3310	.7608	.1906	.6203	.0501	.4799	.9096	.3394	.7691	.1989	.6287	.4882
767	.9014	.3311	.7609	.1907	.6204	.0502	.4800	.9097	.3395	.7693	.1990	.6288	.4884
429770	15.9015	16.3313	16.7610	17.1908	17.6206	18.0503	18.4801	18.9099	19.3397	19.7694	20.1992	20.6290	21.4885
773	.9016	.3314	.7611	.1909	.6207	.0505	.4802	.9100	.3398	.7696	.1993	.6291	.4887
776	.9017	.3315	.7613	.1910	.6208	.0506	.4804	.9101	.3399	.7697	.1995	.6292	.4888
779	.9018	.3316	.7614	.1912	.6209	.0507	.4805	.9103	.3401	.7698	.1996	.6294	.4890
782	.9019	.3317	.7615	.1913	.6211	.0508	.4806	.9104	.3402	.7700	.1998	.6295	.4891
429785	15.9020	16.3318	16.7616	17.1914	17.6212	18.0510	18.4808	18.9105	19.3403	19.7701	20.1999	20.6297	21.4893
788	.9022	.3319	.7617	.1915	.6213	.0511	.4809	.9107	.3405	.7702	.2000	.6298	.4894
791	.9023	.3321	.7618	.1916	.6214	.0512	.4810	.9108	.3406	.7704	.2002	.6300	.4896
794	.9024	.3322	.7620	.1918	.6216	.0513	.4811	.9109	.3407	.7705	.2003	.6301	.4897
797	.9025	.3323	.7621	.1919	.6217	.0515	.4813	.9111	.3409	.7707	.2005	.6303	.4899
429800	15.9026	16.3324	16.7622	17.1920	17.6218	18.0516	18.4814	18.9112	19.3410	19.7708	20.2006	20.6304	21.4900

H A R M O N I C S

BASIC FREQ.	24	25	26	27	28	29	30	31	32	33	34	35	36
429800	10.3152	10.7450	11.1748	11.6046	12.0344	12.4642	12.8940	13.3238	13.7536	14.1834	14.6132	15.0430	15.4728
803	.3153	.7451	.1749	.6047	.0345	.4643	.8941	.3239	.7537	.1835	.6133	.0431	.4729
806	.3153	.7452	.1750	.6048	.0346	.4644	.8942	.3240	.7538	.1836	.6134	.0432	.4730
809	.3154	.7452	.1750	.6048	.0347	.4645	.8943	.3241	.7539	.1837	.6135	.0433	.4731
812	.3155	.7453	.1751	.6049	.0347	.4645	.8944	.3242	.7540	.1838	.6136	.0434	.4732
429815	10.3156	10.7454	11.1752	11.6050	12.0348	12.4646	12.8945	13.3243	13.7541	14.1839	14.6137	15.0435	15.4733
818	.3156	.7455	.1753	.6051	.0349	.4647	.8945	.3244	.7542	.1840	.6138	.0436	.4734
821	.3157	.7455	.1753	.6052	.0350	.4648	.8946	.3245	.7543	.1841	.6139	.0437	.4736
824	.3158	.7456	.1754	.6052	.0351	.4649	.8947	.3245	.7544	.1842	.6140	.0438	.4737
827	.3158	.7457	.1755	.6053	.0352	.4650	.8948	.3246	.7545	.1843	.6141	.0439	.4738
429830	10.3159	10.7458	11.1756	11.6054	12.0352	12.4651	12.8949	13.3247	13.7546	14.1844	14.6142	15.0441	15.4739
833	.3160	.7458	.1757	.6055	.0353	.4652	.8950	.3248	.7547	.1845	.6143	.0442	.4740
836	.3161	.7459	.1757	.6056	.0354	.4652	.8951	.3249	.7548	.1846	.6144	.0443	.4741
839	.3161	.7460	.1758	.6057	.0355	.4653	.8952	.3250	.7548	.1847	.6145	.0444	.4742
842	.3162	.7461	.1759	.6057	.0356	.4654	.8953	.3251	.7549	.1848	.6146	.0445	.4743
429845	10.3163	10.7461	11.1760	11.6058	12.0357	12.4655	12.8954	13.3252	13.7550	14.1849	14.6147	15.0446	15.4744
848	.3164	.7462	.1760	.6059	.0357	.4656	.8954	.3253	.7551	.1850	.6148	.0447	.4745
851	.3164	.7463	.1761	.6060	.0358	.4657	.8955	.3254	.7552	.1851	.6149	.0448	.4746
854	.3165	.7464	.1762	.6061	.0359	.4658	.8956	.3255	.7553	.1852	.6150	.0449	.4747
857	.3166	.7464	.1763	.6061	.0360	.4659	.8957	.3256	.7554	.1854	.6151	.0450	.4749
429860	10.3166	10.7465	11.1764	11.6062	12.0361	12.4659	12.8958	13.3257	13.7555	14.1854	14.6152	15.0451	15.4750
863	.3167	.7466	.1764	.6063	.0362	.4660	.8959	.3258	.7556	.1855	.6153	.0452	.4751
866	.3168	.7467	.1765	.6064	.0362	.4661	.8960	.3258	.7557	.1856	.6154	.0453	.4752
869	.3169	.7467	.1766	.6065	.0363	.4662	.8961	.3259	.7558	.1857	.6155	.0454	.4753
872	.3169	.7468	.1767	.6065	.0364	.4663	.8962	.3260	.7559	.1858	.6156	.0455	.4754
429875	10.3170	10.7469	11.1768	11.6066	12.0365	12.4664	12.8963	13.3261	13.7560	14.1859	14.6158	15.0456	15.4755
878	.3171	.7470	.1768	.6067	.0366	.4665	.8963	.3262	.7561	.1860	.6159	.0457	.4756
881	.3171	.7470	.1769	.6068	.0367	.4665	.8964	.3263	.7562	.1861	.6160	.0458	.4757
884	.3172	.7471	.1770	.6069	.0368	.4666	.8965	.3264	.7563	.1862	.6161	.0459	.4758
887	.3173	.7472	.1771	.6069	.0368	.4667	.8966	.3265	.7564	.1863	.6162	.0460	.4759
429890	10.3174	10.7473	11.1771	11.6070	12.0369	12.4668	12.8967	13.3266	13.7565	14.1864	14.6163	15.0462	15.4760
893	.3174	.7473	.1772	.6071	.0370	.4669	.8968	.3267	.7566	.1865	.6164	.0463	.4761
896	.3175	.7474	.1773	.6072	.0371	.4670	.8969	.3268	.7567	.1866	.6165	.0464	.4763
899	.3176	.7475	.1774	.6073	.0372	.4671	.8970	.3269	.7568	.1867	.6166	.0465	.4764
902	.3176	.7476	.1775	.6074	.0373	.4672	.8971	.3270	.7569	.1868	.6167	.0466	.4765
429905	10.3177	10.7476	11.1775	11.6074	12.0373	12.4672	12.8972	13.3271	13.7570	14.1869	14.6168	15.0467	15.4766
908	.3178	.7477	.1776	.6075	.0374	.4673	.8972	.3271	.7571	.1870	.6169	.0468	.4767
911	.3179	.7478	.1777	.6076	.0375	.4674	.8973	.3272	.7572	.1871	.6170	.0469	.4768
914	.3179	.7479	.1778	.6077	.0376	.4675	.8974	.3273	.7572	.1872	.6171	.0470	.4769
917	.3180	.7479	.1778	.6078	.0377	.4676	.8975	.3274	.7573	.1873	.6172	.0471	.4770
429920	10.3181	10.7480	11.1779	11.6078	12.0378	12.4677	12.8976	13.3275	13.7574	14.1874	14.6173	15.0472	15.4771
923	.3182	.7481	.1780	.6079	.0378	.4678	.8977	.3276	.7575	.1875	.6174	.0473	.4772
926	.3182	.7482	.1781	.6080	.0379	.4679	.8978	.3277	.7576	.1876	.6175	.0474	.4773
929	.3183	.7482	.1782	.6081	.0380	.4679	.8979	.3278	.7577	.1877	.6176	.0475	.4774
932	.3184	.7483	.1782	.6082	.0381	.4680	.8980	.3279	.7578	.1878	.6177	.0476	.4776
429935	10.3184	10.7484	11.1783	11.6082	12.0382	12.4681	12.8981	13.3280	13.7579	14.1879	14.6178	15.0477	15.4777
938	.3185	.7485	.1784	.6083	.0383	.4682	.8981	.3281	.7580	.1880	.6179	.0478	.4778
941	.3186	.7485	.1785	.6084	.0383	.4683	.8982	.3282	.7581	.1881	.6180	.0479	.4779
944	.3187	.7486	.1785	.6085	.0384	.4684	.8983	.3283	.7582	.1882	.6181	.0480	.4780
947	.3187	.7487	.1786	.6086	.0385	.4685	.8984	.3284	.7583	.1883	.6182	.0481	.4781
429950	10.3188	10.7488	11.1787	11.6087	12.0386	12.4686	12.8985	13.3285	13.7584	14.1884	14.6183	15.0483	15.4782
953	.3189	.7488	.1788	.6087	.0387	.4686	.8986	.3285	.7585	.1884	.6184	.0484	.4783
956	.3189	.7489	.1789	.6088	.0388	.4687	.8987	.3286	.7586	.1885	.6185	.0485	.4784
959	.3190	.7490	.1789	.6089	.0389	.4688	.8988	.3287	.7587	.1886	.6186	.0486	.4785
962	.3191	.7491	.1790	.6090	.0389	.4689	.8989	.3288	.7588	.1887	.6187	.0487	.4786
429965	10.3192	10.7491	11.1791	11.6091	12.0390	12.4690	12.8990	13.3289	13.7589	14.1888	14.6188	15.0488	15.4787
968	.3192	.7492	.1792	.6091	.0391	.4691	.8990	.3290	.7590	.1889	.6189	.0489	.4788
971	.3193	.7493	.1792	.6092	.0392	.4692	.8991	.3291	.7591	.1890	.6190	.0490	.4790
972	.3194	.7494	.1793	.6093	.0393	.4692	.8992	.3292	.7592	.1891	.6191	.0491	.4791
977	.3194	.7494	.1794	.6094	.0394	.4693	.8993	.3293	.7593	.1892	.6192	.0492	.4792
429980	10.3195	10.7495	11.1795	11.6095	12.0394	12.4694	12.8994	13.3294	13.7594	14.1893	14.6193	15.0493	15.4793
983	.3196	.7496	.1796	.6095	.0395	.4695	.8995	.3295	.7595	.1894	.6194	.0494	.4794
986	.3197	.7497	.1796	.6096	.0396	.4696	.8996	.3296	.7596	.1895	.6195	.0495	.4795
989	.3197	.7497	.1797	.6097	.0397	.4697	.8997	.3297	.7596	.1896	.6196	.0496	.4796
992	.3198	.7498	.1798	.6098	.0398	.4698	.8998	.3298	.7597	.1897	.6197	.0497	.4797
429995	10.3199	10.7499	11.1799	11.6099	12.0399	12.4699	12.8999	13.3298	13.7598	14.1898	14.6198	15.0498	15.4798
998	.3200	.7500	.1799	.6099	.0399	.4699	.8999	.3299	.7599	.1899	.6199	.0499	.4799
430001	.3200	.7500	.1800	.6100	.0400	.4700	.9000	.3300	.7600	.1900	.6200	.0500	.4800
004	.3201	.7501	.1801	.6101	.0401	.4701	.9001	.3301	.7601	.1901	.6201	.0501	.4801
007	.3202	.7502	.1802	.6102	.0402	.4702	.9002	.3302	.7602	.1902	.6202	.0502	.4803
430010	10.3202	10.7503	11.1803	11.6103	12.0403	12.4703	12.9003	13.3303	13.7603	14.1903	14.6203	15.0504	15.4804
013	.3203	.7503	.1803	.6104	.0404	.4704	.9004	.3304	.7604	.1904	.6204	.0505	.4805
016	.3204	.7504	.1804	.6104	.0404	.4705	.9005	.3305	.7605	.1905	.6205	.0506	.4806
019	.3205	.7505	.1805	.6105	.0405	.4706	.9006	.3306	.7606	.1906	.6206	.0507	.4807
022	.3205	.7506	.1806	.6106	.0406	.4706	.9007	.3307	.7607	.1907	.6207	.0508	.4808
430025	10.3206	10.7506	11.1807	11.6107	12.0407	12.4707	12.9008	13.3308	13.7608	14.1908	14.6209	15.0509	15.4809
028	.3207	.7507	.1807	.6108	.0408	.4708	.9008	.3309	.7609	.1909	.6210	.0510	.4810
031	.3207	.7508	.1808	.6108	.0409	.4709	.9009	.3310	.7610	.1910	.6211	.0511	.4811
034	.3208	.7509	.1809	.6109	.0410	.4710	.9010	.3311	.7611	.1911	.6212	.0512	.4812
037	.3209	.7509	.1810	.6110	.0410	.4711	.9011	.3311	.7612	.1912	.6213	.0513	.4813
430040	10.3210	10.7510	11.1810	11.6111	12.0411	12.4712	12.9012	13.3312	13.7613	14.1913	14.6214	15.0514	15.4814
043	.3210	.7511	.1811	.6112	.0412	.4712	.9013	.3313	.7614	.1914	.6215	.0515	.4815
046	.3211	.7512	.1812	.6112	.0413	.4713	.9014	.3314	.7615	.1915	.6216	.0516	.4817
049	.3212	.7512	.1813	.6113	.0414	.4714	.9015	.3315	.7616	.1916	.6217	.0517	.4818
052	.3212	.7513	.1814	.6114	.0415	.4715	.9016	.3316	.7617	.1917	.6218	.0518	.4819
430055	10.3213	10.7514	11.1814	11.6115	12.0415	12.4716	12.9017	13.3317	13.7618	14.1918	14.6219	15.0519	15.4820
058	.3214	.7515	.1815	.6116	.0416	.4717	.9017	.3318	.7619	.1919	.6220	.0520	.4821
061	.3215	.7515	.1816	.6116	.0417	.4718	.9018	.3319	.7620	.1920	.6221	.0521	.4822
064	.3215	.7516	.1817	.6117	.0418	.4719	.9019	.3320	.7620	.1921	.6222	.0522	.4823
067	.3216	.7517	.1817	.6118	.0419	.4719	.9020	.3321	.7621	.1922	.6223	.0523	.4824
430070	10.3217	10.7518	11.1818	11.6119	12.0420	12.4720	12.9021	13.3322	13.7622	14.1923	14.6224	15.0525	15.4825
073	.3218	.7518	.1819	.6120	.0420	.4721	.9022	.3323	.7623	.1924	.6225	.0526	.4826
076	.3218	.7519	.1820	.6121	.0421	.4722	.9023	.3324	.7624	.1925	.6226	.0527	.4827
079	.3219	.7520	.1821	.6121	.0422	.4723	.9024	.3324	.7625	.1926	.6227	.0528	.4828
082	.3220	.7521	.1821	.6122	.0423	.4724	.9025	.3325	.7626	.1927	.6228	.0529	.4830
430085	10.3220	10.7521	11.1822	11.6123	12.0424	12.4725	12.9026	13.3326	13.7627	14.1928	14.6229	15.0530	15.4831
088	.3221	.7522	.1823	.6124	.0425	.4726	.9026	.3327	.7628	.1929	.6230	.0531	.4832
091	.3222	.7523	.1824	.6125	.0425	.4726	.9027	.3328	.7629	.1930	.6231	.0532	.4833
094	.3223	.7524	.1824	.6125	.0426	.4727	.9028	.3329	.7630	.1931	.6232	.0533	.4834
097	.3223	.7524	.1825	.6126	.0427	.4728	.9029	.3330	.7631	.1932	.6233	.0534	.4835
430100	10.3224	10.7525	11.1826	11.6127	12.0428	12.4729	12.9030	13.3331	13.7632	14.1933	14.6234	15.0535	15.4836

MEGACYCLES PER SECOND

BASIC FREQ.	37	38	39	40	41	42	43	44	45	46	47	48	50
	HARMONICS												
429800	15.9026	16.3324	16.7622	17.1920	17.6218	18.0516	18.4814	18.9112	19.3410	19.7708	20.2006	20.6304	21.4900
803	.9027	.3325	.7623	.1921	.6219	.0517	.4815	.9113	.3411	.7709	.2007	.6305	.4902
806	.9028	.3326	.7624	.1922	.6220	.0519	.4817	.9115	.3413	.7711	.2009	.6307	.4903
809	.9029	.3327	.7626	.1924	.6222	.0520	.4818	.9116	.3414	.7712	.2010	.6308	.4905
812	.9030	.3329	.7627	.1925	.6223	.0521	.4819	.9117	.3415	.7714	.2012	.6310	.4906
429815	15.9032	16.3330	16.7628	17.1926	17.6224	18.0522	18.4820	18.9119	19.3417	19.7715	20.2013	20.6311	21.4908
818	.9033	.3331	.7629	.1927	.6225	.0524	.4822	.9120	.3418	.7716	.2014	.6313	.4909
821	.9034	.3332	.7630	.1928	.6227	.0525	.4823	.9121	.3419	.7718	.2016	.6314	.4911
824	.9035	.3333	.7631	.1930	.6228	.0526	.4824	.9123	.3421	.7719	.2017	.6316	.4912
827	.9036	.3334	.7633	.1931	.6229	.0527	.4826	.9124	.3422	.7720	.2019	.6317	.4914
429830	15.9037	16.3335	16.7634	17.1932	17.6230	18.0529	18.4827	18.9125	19.3424	19.7722	20.2020	20.6318	21.4915
833	.9038	.3337	.7635	.1933	.6232	.0530	.4828	.9127	.3425	.7723	.2022	.6320	.4917
836	.9039	.3338	.7636	.1934	.6233	.0531	.4829	.9128	.3426	.7725	.2023	.6321	.4918
839	.9040	.3339	.7637	.1936	.6234	.0532	.4831	.9129	.3428	.7726	.2024	.6323	.4920
842	.9042	.3340	.7638	.1937	.6235	.0534	.4832	.9130	.3429	.7727	.2026	.6324	.4921
429845	15.9043	16.3341	16.7640	17.1938	17.6236	18.0535	18.4833	18.9132	19.3430	19.7729	20.2027	20.6326	21.4923
848	.9044	.3342	.7641	.1939	.6238	.0536	.4835	.9133	.3432	.7730	.2029	.6327	.4924
851	.9045	.3343	.7642	.1940	.6239	.0537	.4836	.9134	.3433	.7731	.2030	.6328	.4926
854	.9046	.3345	.7643	.1942	.6240	.0539	.4837	.9136	.3434	.7733	.2031	.6330	.4927
857	.9047	.3346	.7644	.1943	.6241	.0540	.4839	.9137	.3436	.7734	.2033	.6331	.4929
429860	15.9048	16:3347	16.7645	17.1944	17.6243	18.0541	18.4840	18.9138	19.3437	19.7736	20.2034	20.6333	21.4930
863	.9049	.3348	.7647	.1945	.6244	.0542	.4841	.9140	.3438	.7737	.2036	.6334	.4932
866	.9050	.3349	.7648	.1946	.6245	.0544	.4842	.9141	.3440	.7738	.2037	.6336	.4933
869	.9052	.3350	.7649	.1948	.6246	.0545	.4844	.9142	.3441	.7740	.2038	.6337	.4935
872	.9053	.3351	.7650	.1949	.6248	.0546	.4845	.9144	.3442	.7741	.2040	.6339	.4936
429875	15.9054	16.3353	16.7651	17.1950	17.6249	18.0548	18.4846	18.9145	19.3444	19.7743	20.2041	20.6340	21.4938
878	.9055	.3354	.7652	.1951	.6250	.0549	.4848	.9146	.3445	.7744	.2043	.6341	.4939
881	.9056	.3355	.7654	.1952	.6251	.0550	.4849	.9148	.3446	.7745	.2044	.6343	.4941
884	.9057	.3356	.7655	.1954	.6252	.0551	.4850	.9149	.3448	.7747	.2045	.6344	.4942
887	.9058	.3357	.7656	.1955	.6254	.0553	.4851	.9150	.3449	.7748	.2047	.6346	.4944
429890	15.9059	16.3358	16.7657	17.1956	17.6255	18.0554	18.4853	18.9152	19.3451	19.7749	20.2048	20.6347	21.4945
893	.9060	.3359	.7658	.1957	.6256	.0555	.4854	.9153	.3452	.7751	.2050	.6349	.4947
896	.9062	.3360	.7659	.1958	.6257	.0556	.4855	.9154	.3453	.7752	.2051	.6350	.4948
899	.9063	.3362	.7661	.1960	.6259	.0558	.4857	.9156	.3455	.7754	.2053	.6352	.4950
902	.9064	.3363	.7662	.1961	.6260	.0559	.4858	.9157	.3456	.7755	.2054	.6353	.4951
429905	15.9065	16.3364	16.7663	17.1962	17.6261	18.0560	18.4859	18.9158	19.3457	19.7756	20.2055	20.6354	21.4953
908	.9066	.3365	.7664	.1963	.6262	.0561	.4860	.9160	.3459	.7758	.2057	.6356	.4954
911	.9067	.3366	.7665	.1964	.6264	.0563	.4862	.9161	.3460	.7759	.2058	.6357	.4956
914	.9068	.3367	.7666	.1966	.6265	.0564	.4863	.9162	.3461	.7760	.2060	.6359	.4957
917	.9069	.3368	.7668	.1967	.6266	.0565	.4864	.9163	.3463	.7762	.2061	.6360	.4959
429920	15.9070	16.3370	16.7669	17.1968	17.6267	18.0566	18.4866	18.9165	19.3464	19.7763	20.2062	20.6362	21.4960
923	.9072	.3371	.7670	.1969	.6268	.0568	.4867	.9166	.3465	.7765	.2064	.6363	.4962
926	.9073	.3372	.7671	.1970	.6270	.0569	.4868	.9167	.3467	.7766	.2065	.6364	.4963
929	.9074	.3373	.7672	.1972	.6271	.0570	.4869	.9169	.3468	.7767	.2067	.6366	.4965
932	.9075	.3374	.7673	.1973	.6272	.0571	.4871	.9170	.3469	.7769	.2068	.6367	.4966
429935	15.9076	16.3375	16.7675	17.1974	17.6273	18.0573	18.4872	18.9171	19.3471	19.7770	20.2069	20.6369	21.4968
938	.9077	.3376	.7676	.1975	.6275	.0574	.4873	.9173	.3472	.7771	.2071	.6370	.4969
941	.9078	.3378	.7677	.1976	.6276	.0575	.4875	.9174	.3473	.7773	.2072	.6372	.4971
944	.9079	.3379	.7678	.1978	.6277	.0576	.4876	.9175	.3475	.7774	.2074	.6373	.4972
947	.9080	.3380	.7679	.1979	.6278	.0578	.4877	.9177	.3476	.7776	.2075	.6375	.4974
429950	15.9082	16.3381	16.7681	17.1980	17.6280	18.0579	18.4879	18.9178	19.3478	19.7777	20.2077	20.6376	21.4975
953	.9083	.3382	.7682	.1981	.6281	.0580	.4880	.9179	.3479	.7778	.2078	.6377	.4977
956	.9084	.3383	.7683	.1982	.6282	.0582	.4881	.9181	.3480	.7780	.2079	.6379	.4978
959	.9085	.3384	.7684	.1984	.6283	.0583	.4882	.9182	.3482	.7781	.2081	.6380	.4980
962	.9086	.3386	.7685	.1985	.6284	.0584	.4884	.9183	.3483	.7783	.2082	.6382	.4981
429965	15.9087	16.3387	16.7686	17.1986	17.6286	18.0585	18.4885	18.9185	19.3484	19.7784	20.2084	20.6383	21.4983
968	.9088	.3388	.7688	.1987	.6287	.0587	.4886	.9186	.3486	.7785	.2085	.6385	.4984
971	.9089	.3389	.7689	.1988	.6288	.0588	.4888	.9187	.3487	.7787	.2086	.6386	.4986
974	.9090	.3390	.7690	.1990	.6289	.0589	.4889	.9189	.3488	.7788	.2088	.6388	.4987
977	.9091	.3391	.7691	.1991	.6291	.0590	.4890	.9190	.3490	.7789	.2089	.6389	.4989
429980	15.9093	16.3392	16.7692	17.1992	17.6292	18.0592	18.4891	18.9191	19.3491	19.7791	20.2091	20.6390	21.4990
983	.9094	.3394	.7693	.1993	.6293	.0593	.4893	.9193	.3492	.7792	.2092	.6392	.4992
986	.9095	.3395	.7695	.1994	.6294	.0594	.4894	.9194	.3494	.7794	.2093	.6393	.4993
989	.9096	.3396	.7696	.1996	.6295	.0595	.4895	.9195	.3495	.7795	.2095	.6395	.4995
992	.9097	.3397	.7697	.1997	.6297	.0597	.4897	.9196	.3496	.7796	.2096	.6396	.4996
429995	15.9098	16.3398	16.7698	17.1998	17.6298	18.0598	18.4898	18.9198	19.3498	19.7798	20.2098	20.6398	21.4998
998	.9099	.3399	.7699	.1999	.6299	.0599	.4899	.9199	.3499	.7799	.2099	.6399	.4999
430001	.9100	.3400	.7700	.2000	.6300	.0600	.4900	.9200	.3500	.7800	.2100	.6400	.5001
004	.9101	.3402	.7702	.2002	.6302	.0602	.4902	.9202	.3502	.7802	.2102	.6402	.5002
007	.9103	.3403	.7703	.2003	.6303	.0603	.4903	.9203	.3503	.7803	.2103	.6403	.5004
430010	15.9104	16.3404	16.7704	17.2004	17.6304	18.0604	18.4904	18.9204	19.3505	19.7805	20.2105	20.6405	21.5005
013	.9105	.3405	.7705	.2005	.6305	.0605	.4906	.9206	.3506	.7806	.2106	.6406	.5007
016	.9106	.3406	.7706	.2006	.6307	.0607	.4907	.9207	.3507	.7807	.2108	.6408	.5008
019	.9107	.3407	.7707	.2008	.6308	.0608	.4908	.9208	.3509	.7809	.2109	.6409	.5010
022	.9108	.3408	.7709	.2009	.6309	.0609	.4909	.9210	.3510	.7810	.2110	.6411	.5011
430025	15.9109	16.3410	16.7710	17.2010	17.6310	18.0611	18.4911	18.9211	19.3511	19.7812	20.2112	20.6412	21.5013
028	.9110	.3411	.7711	.2011	.6311	.0612	.4912	.9212	.3513	.7813	.2113	.6413	.5014
031	.9111	.3412	.7712	.2012	.6313	.0613	.4913	.9214	.3514	.7814	.2115	.6415	.5016
034	.9113	.3413	.7713	.2014	.6314	.0614	.4915	.9215	.3515	.7816	.2116	.6416	.5017
037	.9114	.3414	.7714	.2015	.6315	.0616	.4916	.9216	.3517	.7817	.2117	.6418	.5019
430040	15.9115	16.3415	16.7716	17.2016	17.6316	18.0617	18.4917	18.9218	19.3518	19.7818	20.2119	20.6419	21.5020
043	.9116	.3416	.7717	.2017	.6318	.0618	.4918	.9219	.3519	.7820	.2120	.6421	.5022
046	.9117	.3417	.7718	.2018	.6319	.0619	.4920	.9220	.3521	.7821	.2122	.6422	.5023
049	.9118	.3419	.7719	.2020	.6320	.0621	.4921	.9222	.3522	.7823	.2123	.6424	.5025
052	.9119	.3420	.7720	.2021	.6321	.0622	.4922	.9223	.3523	.7824	.2124	.6425	.5026
430055	15.9120	16.3421	16.7721	17.2022	17.6323	18.0623	18.4924	18.9224	19.3525	19.7825	20.2126	20.6426	21.5028
058	.9121	.3422	.7723	.2023	.6324	.0624	.4925	.9226	.3526	.7827	.2127	.6428	.5029
061	.9123	.3423	.7724	.2024	.6325	.0626	.4926	.9227	.3527	.7828	.2129	.6429	.5031
064	.9124	.3424	.7725	.2026	.6326	.0627	.4928	.9228	.3529	.7829	.2130	.6431	.5032
067	.9125	.3425	.7726	.2027	.6327	.0628	.4929	.9229	.3530	.7831	.2131	.6432	.5034
430070	15.9126	16.3427	16.7727	17.2028	17.6329	18.0629	18.4930	18.9231	19.3532	19.7832	20.2133	20.6434	21.5035
073	.9127	.3428	.7728	.2029	.6330	.0631	.4931	.9232	.3533	.7834	.2134	.6435	.5037
076	.9128	.3429	.7730	.2030	.6331	.0632	.4933	.9233	.3534	.7835	.2136	.6436	.5038
079	.9129	.3430	.7731	.2032	.6332	.0633	.4934	.9235	.3536	.7836	.2137	.6438	.5040
082	.9130	.3431	.7732	.2033	.6334	.0634	.4935	.9236	.3537	.7838	.2139	.6439	.5041
430085	15.9131	16.3432	16.7733	17.2034	17.6335	18.0636	18.4937	18.9237	19.3538	19.7839	20.2140	20.6441	21.5043
088	.9133	.3433	.7734	.2035	.6336	.0637	.4938	.9239	.3540	.7840	.2141	.6442	.5044
091	.9134	.3435	.7735	.2036	.6337	.0638	.4939	.9240	.3541	.7842	.2143	.6444	.5046
094	.9135	.3436	.7737	.2038	.6339	.0639	.4940	.9241	.3542	.7843	.2144	.6445	.5047
097	.9136	.3437	.7738	.2039	.6340	.0641	.4942	.9243	.3544	.7845	.2146	.6447	.5049
430100	15.9137	16.3438	16.7739	17.2040	17.6341	18.0642	18.4943	18.9244	19.3545	19.7846	20.2147	20.6448	21.5050

MEGACYCLES PER SECOND

HARMONICS

BASIC FREQ.	24	25	26	27	28	29	30	31	32	33	34	35	36
430100	10.3224	10.7525	11.1826	11.6127	12.0428	12.4729	12.9030	13.3331	13.7632	14.1933	14.6234	15.0535	15.4836
103	.3225	.7526	.1827	.6128	.0429	.4730	.9031	.3332	.7633	.1934	.6235	.0536	.4837
106	.3225	.7527	.1828	.6129	.0430	.4731	.9032	.3333	.7634	.1935	.6236	.0537	.4838
109	.3226	.7527	.1828	.6129	.0431	.4732	.9033	.3334	.7635	.1936	.6237	.0538	.4839
112	.3227	.7528	.1829	.6130	.0431	.4732	.9034	.3335	.7636	.1937	.6238	.0539	.4840
430115	10.3228	10.7529	11.1830	11.6131	12.0432	12.4733	12.9035	13.3336	13.7637	14.1938	14.6239	15.0540	15.4841
118	.3228	.7530	.1831	.6132	.0433	.4734	.9035	.3337	.7638	.1939	.6240	.0541	.4842
121	.3229	.7530	.1831	.6133	.0434	.4735	.9036	.3338	.7639	.1940	.6241	.0542	.4844
124	.3230	.7531	.1832	.6133	.0435	.4736	.9037	.3338	.7640	.1941	.6242	.0543	.4845
127	.3230	.7532	.1833	.6134	.0436	.4737	.9038	.3339	.7641	.1942	.6243	.0544	.4846
430130	10.3231	10.7533	11.1834	11.6135	12.0436	12.4738	12.9039	13.3340	13.7642	14.1943	14.6244	15.0546	15.4847
133	.3232	.7533	.1835	.6136	.0437	.4739	.9040	.3341	.7643	.1944	.6245	.0547	.4848
136	.3233	.7534	.1835	.6137	.0438	.4739	.9041	.3342	.7644	.1945	.6246	.0548	.4849
139	.3233	.7535	.1836	.6138	.0439	.4740	.9042	.3343	.7644	.1946	.6247	.0549	.4850
142	.3234	.7536	.1837	.6138	.0440	.4741	.9043	.3344	.7645	.1947	.6248	.0550	.4851
430145	10.3235	10.7536	11.1838	11.6139	12.0441	12.4742	12.9044	13.3345	13.7646	14.1948	14.6249	15.0551	15.4852
158	.3236	.7537	.1838	.6140	.0441	.4743	.9044	.3346	.7647	.1949	.6250	.0552	.4853
151	.3236	.7538	.1839	.6141	.0442	.4744	.9045	.3347	.7648	.1950	.6251	.0553	.4854
154	.3237	.7539	.1840	.6142	.0443	.4745	.9046	.3348	.7649	.1951	.6252	.0554	.4855
157	.3238	.7539	.1841	.6142	.0444	.4746	.9047	.3349	.7650	.1952	.6253	.0555	.4857
430160	10.3238	10.7540	11.1842	11.6143	12.0445	12.4746	12.9048	13.3350	13.7651	14.1953	14.6254	15.0556	15.4858
163	.3239	.7541	.1842	.6144	.0446	.4747	.9049	.3351	.7652	.1954	.6255	.0557	.4859
166	.3240	.7542	.1843	.6145	.0446	.4748	.9050	.3351	.7653	.1955	.6256	.0558	.4860
169	.3241	.7542	.1844	.6146	.0447	.4749	.9051	.3352	.7654	.1956	.6257	.0559	.4861
172	.3241	.7543	.1845	.6146	.0448	.4750	.9052	.3353	.7655	.1957	.6258	.0560	.4862
430175	10.3242	10.7544	11.1846	11.6147	12.0449	12.4751	12.9053	13.3354	13.7656	14.1958	14.6260	15.0561	15.4863
178	.3243	.7545	.1846	.6148	.0450	.4752	.9053	.3355	.7657	.1959	.6261	.0562	.4864
181	.3243	.7545	.1847	.6149	.0451	.4752	.9054	.3356	.7658	.1960	.6262	.0563	.4865
184	.3244	.7546	.1848	.6150	.0452	.4753	.9055	.3357	.7659	.1961	.6263	.0564	.4866
187	.3245	.7547	.1849	.6150	.0452	.4754	.9056	.3358	.7660	.1962	.6264	.0565	.4867
430190	10.3246	10.7548	11.1849	11.6151	12.0453	12.4755	12.9057	13.3359	13.7661	14.1963	14.6265	15.0567	15.4868
193	.3246	.7548	.1850	.6152	.0454	.4756	.9058	.3360	.7662	.1964	.6266	.0568	.4869
196	.3247	.7549	.1851	.6153	.0455	.4757	.9059	.3361	.7663	.1965	.6267	.0569	.4871
199	.3248	.7550	.1852	.6154	.0456	.4758	.9060	.3362	.7664	.1966	.6268	.0570	.4872
202	.3248	.7551	.1853	.6155	.0457	.4759	.9061	.3363	.7665	.1967	.6269	.0571	.4873
430205	10.3249	10.7551	11.1853	11.6155	12.0457	12.4759	12.9062	13.3364	13.7666	14.1968	14.6270	15.0572	15.4874
208	.3250	.7552	.1854	.6156	.0458	.4760	.9062	.3364	.7667	.1969	.6271	.0573	.4875
211	.3251	.7553	.1855	.6157	.0459	.4761	.9063	.3365	.7668	.1970	.6272	.0574	.4876
214	.3251	.7554	.1856	.6158	.0460	.4762	.9064	.3366	.7668	.1971	.6273	.0575	.4877
217	.3252	.7554	.1856	.6159	.0461	.4763	.9065	.3367	.7669	.1972	.6274	.0576	.4878
430220	10.3253	10.7555	11.1857	11.6159	12.0462	12.4764	12.9066	13.3368	13.7670	14.1973	14.6275	.0577	.4879
223	.3254	.7556	.1858	.6160	.0462	.4765	.9067	.3369	.7671	.1974	.6276	.0578	.4880
226	.3254	.7557	.1859	.6161	.0463	.4766	.9068	.3370	.7672	.1975	.6277	.0579	.4881
229	.3255	.7557	.1860	.6162	.0464	.4766	.9069	.3371	.7673	.1976	.6278	.0580	.4882
232	.3256	.7558	.1860	.6163	.0465	.4767	.9070	.3372	.7674	.1977	.6279	.0581	.4884
430235	10.3256	10.7559	11.1861	11.6163	12.0466	12.4768	12.9071	13.3373	13.7675	14.1978	14.6280	15.0582	15.4885
238	.3257	.7560	.1862	.6164	.0467	.4769	.9071	.3374	.7676	.1979	.6281	.0583	.4886
241	.3258	.7560	.1863	.6165	.0467	.4770	.9072	.3375	.7677	.1980	.6282	.0584	.4887
244	.3259	.7561	.1863	.6166	.0468	.4771	.9073	.3376	.7678	.1981	.6283	.0585	.4888
247	.3259	.7562	.1864	.6167	.0469	.4772	.9074	.3377	.7679	.1982	.6284	.0586	.4889
430250	10.3260	10.7563	11.1865	11.6168	12.0470	12.4773	12.9075	13.3378	13.7680	14.1983	14.6285	15.0588	15.4890
253	.3261	.7563	.1866	.6168	.0471	.4773	.9076	.3378	.7681	.1983	.6286	.0589	.4891
256	.3261	.7564	.1867	.6169	.0472	.4774	.9077	.3379	.7682	.1984	.6287	.0590	.4892
259	.3262	.7565	.1867	.6170	.0473	.4775	.9078	.3380	.7683	.1985	.6288	.0591	.4893
262	.3263	.7566	.1868	.6171	.0473	.4776	.9079	.3381	.7684	.1986	.6289	.0592	.4894
430265	10.3264	10.7566	11.1869	11.6172	12.0474	12.4777	12.9080	13.3382	13.7685	14.1987	14.6290	15.0593	15.4895
268	.3264	.7567	.1870	.6172	.0475	.4778	.9080	.3383	.7686	.1988	.6291	.0594	.4896
271	.3265	.7568	.1870	.6173	.0476	.4779	.9081	.3384	.7687	.1989	.6292	.0595	.4898
274	.3266	.7569	.1871	.6174	.0477	.4779	.9082	.3385	.7688	.1990	.6293	.0596	.4899
277	.3266	.7569	.1872	.6175	.0478	.4780	.9083	.3386	.7689	.1991	.6294	.0597	.4900
430280	10.3267	10.7570	11.1873	11.6176	12.0478	12.4781	12.9084	13.3387	13.7690	14.1992	14.6295	15.0598	15.4901
283	.3268	.7571	.1874	.6176	.0479	.4782	.9085	.3388	.7691	.1993	.6296	.0599	.4902
286	.3269	.7572	.1874	.6177	.0480	.4783	.9086	.3389	.7692	.1994	.6297	.0600	.4903
289	.3269	.7572	.1875	.6178	.0481	.4784	.9087	.3390	.7692	.1995	.6298	.0601	.4904
292	.3270	.7573	.1876	.6179	.0482	.4785	.9088	.3391	.7693	.1996	.6299	.0602	.4905
430295	10.3271	10.7574	11.1877	11.6180	12.0483	12.4786	12.9089	13.3391	13.7694	14.1997	14.6300	15.0603	15.4906
298	.3272	.7575	.1877	.6180	.0483	.4786	.9089	.3392	.7695	.1998	.6301	.0604	.4907
301	.3272	.7575	.1878	.6181	.0484	.4787	.9090	.3393	.7696	.1999	.6302	.0605	.4908
304	.3273	.7576	.1879	.6182	.0485	.4788	.9091	.3394	.7697	.2000	.6303	.0606	.4909
307	.3274	.7577	.1880	.6183	.0486	.4789	.9092	.3395	.7698	.2001	.6304	.0607	.4911
430310	10.3274	10.7578	11.1881	11.6184	12.0487	12.4790	12.9093	13.3396	13.7699	14.2002	14.6305	15.0609	15.4912
313	.3275	.7578	.1881	.6185	.0488	.4791	.9094	.3397	.7700	.2003	.6306	.0610	.4913
316	.3276	.7579	.1882	.6185	.0488	.4792	.9095	.3398	.7701	.2004	.6307	.0611	.4914
319	.3277	.7580	.1883	.6186	.0489	.4793	.9096	.3399	.7702	.2005	.6308	.0612	.4915
322	.3277	.7581	.1884	.6187	.0490	.4793	.9097	.3400	.7703	.2006	.6309	.0613	.4916
430325	10.3278	10.7581	11.1885	11.6188	12.0491	12.4794	12.9098	13.3401	13.7704	14.2007	14.6311	15.0614	15.4917
328	.3279	.7582	.1885	.6189	.0492	.4795	.9098	.3402	.7705	.2008	.6312	.0615	.4918
331	.3279	.7583	.1886	.6189	.0493	.4796	.9099	.3403	.7706	.2009	.6313	.0616	.4919
334	.3280	.7584	.1887	.6190	.0494	.4797	.9100	.3404	.7707	.2010	.6314	.0617	.4920
337	.3281	.7584	.1888	.6191	.0494	.4798	.9101	.3404	.7708	.2011	.6315	.0618	.4921
430340	10.3282	10.7585	11.1888	11.6192	12.0495	12.4799	12.9102	13.3405	13.7709	14.2012	14.6316	15.0619	15.4922
343	.3282	.7586	.1889	.6193	.0496	.4799	.9103	.3406	.7710	.2013	.6317	.0620	.4923
346	.3283	.7587	.1890	.6193	.0497	.4800	.9104	.3407	.7711	.2014	.6318	.0621	.4925
349	.3284	.7587	.1891	.6194	.0498	.4801	.9105	.3408	.7712	.2015	.6319	.0622	.4926
352	.3284	.7588	.1892	.6195	.0499	.4802	.9106	.3409	.7713	.2016	.6320	.0623	.4927
430355	10.3285	10.7589	11.1892	11.6196	12.0499	12.4803	12.9107	13.3410	13.7714	14.2017	14.6321	15.0624	15.4928
358	.3286	.7590	.1893	.6197	.0500	.4804	.9107	.3411	.7715	.2018	.6322	.0625	.4929
361	.3287	.7590	.1894	.6197	.0501	.4805	.9108	.3412	.7716	.2019	.6323	.0626	.4930
364	.3287	.7591	.1895	.6198	.0502	.4806	.9109	.3413	.7716	.2020	.6324	.0627	.4931
367	.3288	.7592	.1895	.6199	.0503	.4806	.9110	.3414	.7717	.2021	.6325	.0628	.4932
430370	10.3289	10.7593	11.1896	11.6200	12.0504	12.4807	12.9111	13.3415	13.7718	14.2022	14.6326	15.0630	15.4933
373	.3290	.7593	.1897	.6201	.0504	.4808	.9112	.3416	.7719	.2023	.6327	.0631	.4934
376	.3290	.7594	.1898	.6202	.0505	.4809	.9113	.3417	.7720	.2024	.6328	.0632	.4935
379	.3291	.7595	.1899	.6202	.0506	.4810	.9114	.3417	.7721	.2025	.6329	.0633	.4936
382	.3292	.7596	.1899	.6203	.0507	.4811	.9115	.3418	.7722	.2026	.6330	.0634	.4938
430385	10.3292	10.7596	11.1900	11.6204	12.0508	12.4812	12.9116	13.3419	13.7723	14.2027	14.6331	15.0635	15.4939
388	.3293	.7597	.1901	.6205	.0509	.4813	.9116	.3420	.7724	.2028	.6332	.0636	.4940
391	.3294	.7598	.1902	.6206	.0509	.4813	.9117	.3421	.7725	.2029	.6333	.0637	.4941
394	.3295	.7599	.1902	.6206	.0510	.4814	.9118	.3422	.7726	.2030	.6334	.0638	.4942
397	.3295	.7599	.1903	.6207	.0511	.4815	.9119	.3423	.7727	.2031	.6335	.0639	.4943
430400	10.3296	10.7600	11.1904	11.6208	12.0512	12.4816	12.9120	13.3424	13.7728	14.2032	14.6336	15.0640	15.4944

MEGACYCLES PER SECOND

HARMONICS

BASIC FREQ.	37	38	39	40	41	42	43	44	45	46	47	48	50
430100	15.9137	16.3438	16.7739	17.2040	17.6341	18.0642	18.4943	18.9244	19.3545	19.7846	20.2147	20.6448	21.5050
103	.9138	.3439	.7740	.2041	.6342	.0643	.4944	.9245	.3546	.7847	.2148	.6449	.5052
106	.9139	.3440	.7741	.2042	.6343	.0645	.4946	.9247	.3548	.7849	.2150	.6451	.5053
109	.9140	.3441	.7743	.2044	.6345	.0646	.4947	.9248	.3549	.7850	.2151	.6452	.5055
112	.9141	.3443	.7744	.2045	.6346	.0647	.4948	.9249	.3550	.7852	.2153	.6454	.5056
430115	15.9143	16.3444	16.7745	17.2046	17.6347	18.0648	18.4949	18.9251	19.3552	19.7853	20.2154	20.6455	21.5058
118	.9144	.3445	.7746	.2047	.6348	.0650	.4951	.9252	.3553	.7854	.2155	.6457	.5059
121	.9145	.3446	.7747	.2048	.6350	.0651	.4952	.9253	.3554	.7856	.2157	.6458	.5061
124	.9146	.3447	.7748	.2050	.6351	.0652	.4953	.9255	.3556	.7857	.2158	.6460	.5062
127	.9147	.3448	.7750	.2051	.6352	.0653	.4955	.9256	.3557	.7858	.2160	.6461	.5064
430130	15.9148	16.3449	16.7751	17.2052	17.6353	18.0655	18.4956	18.9257	19.3559	19.7860	20.2161	20.6462	21.5065
133	.9149	.3451	.7752	.2053	.6355	.0656	.4957	.9259	.3560	.7861	.2163	.6464	.5067
136	.9150	.3452	.7753	.2054	.6356	.0657	.4958	.9260	.3561	.7863	.2164	.6465	.5068
139	.9151	.3453	.7754	.2056	.6357	.0658	.4960	.9261	.3563	.7864	.2165	.6467	.5070
142	.9153	.3454	.7755	.2057	.6358	.0660	.4961	.9262	.3564	.7865	.2167	.6468	.5071
430145	15.9154	16:3455	16.7757	17.2058	17.6359	18.0661	18.4962	18.9264	19.3565	19.7867	20.2168	20.6470	21.5073
148	.9155	.3456	.7758	.2059	.6361	.0662	.4964	.9265	.3567	.7868	.2170	.6471	.5074
151	.9156	.3457	.7759	.2060	.6362	.0663	.4965	.9266	.3568	.7869	.2171	.6472	.5076
154	.9157	.3459	.7760	.2062	.6363	.0665	.4966	.9268	.3569	.7871	.2172	.6474	.5077
157	.9158	.3460	.7761	.2063	.6364	.0666	.4968	.9269	.3571	.7872	.2174	.6475	.5079
430160	15.9159	16.3461	16.7762	17.2064	17.6366	18.0667	18.4969	18.9270	19.3572	19.7874	20.2175	20.6477	21.5080
163	.9160	.3462	.7764	.2065	.6367	.0668	.4970	.9272	.3573	.7875	.2177	.6478	.5082
166	.9161	.3463	.7765	.2066	.6368	.0670	.4971	.9273	.3575	.7876	.2178	.6480	.5083
169	.9163	.3464	.7766	.2068	.6369	.0671	.4973	.9274	.3576	.7878	.2179	.6481	.5085
172	.9164	.3465	.7767	.2069	.6371	.0672	.4974	.9276	.3577	.7879	.2181	.6483	.5086
430175	15.9165	16.3467	16.7768	17.2070	17.6372	18.0674	18.4975	18.9277	19.3579	19.7881	20.2182	20.6484	21.5088
178	.9166	.3468	.7769	.2071	.6373	.0675	.4977	.9278	.3580	.7882	.2184	.6485	.5089
181	.9167	.3469	.7771	.2072	.6374	.0676	.4978	.9280	.3581	.7883	.2185	.6487	.5091
184	.9168	.3470	.7772	.2074	.6375	.0677	.4979	.9281	.3583	.7885	.2186	.6488	.5092
187	.9169	.3471	.7773	.2075	.6377	.0679	.4980	.9282	.3584	.7886	.2188	.6490	.5094
430190	15.9170	16.3472	16.7774	17.2076	17.6378	18.0680	18.4982	18.9284	19.3586	19.7887	20.2189	20.6491	21.5095
193	.9171	.3473	.7775	.2077	.6379	.0681	.4983	.9285	.3587	.7889	.2191	.6493	.5097
196	.9173	.3474	.7776	.2078	.6380	.0682	.4984	.9286	.3588	.7890	.2192	.6494	.5098
199	.9174	.3476	.7778	.2080	.6382	.0684	.4986	.9288	.3590	.7892	.2194	.6496	.5100
202	.9175	.3477	.7779	.2081	.6383	.0685	.4987	.9289	.3591	.7893	.2195	.6497	.5101
430205	15.9176	16.3478	16.7780	17.2082	17.6384	18.0686	18.4988	18.9290	19.3592	19.7894	20.2196	20.6498	21.5103
208	.9177	.3479	.7781	.2083	.6385	.0687	.4989	.9292	.3594	.7896	.2198	.6500	.5104
211	.9178	.3480	.7782	.2084	.6387	.0689	.4991	.9293	.3595	.7897	.2199	.6501	.5106
214	.9179	.3481	.7783	.2086	.6388	.0690	.4992	.9294	.3596	.7898	.2201	.6503	.5107
217	.9180	.3482	.7785	.2087	.6389	.0691	.4993	.9295	.3598	.7900	.2202	.6504	.5109
430220	15.9181	16.3484	16.7786	17.2088	17.6390	18.0692	18.4995	18.9297	19.3599	19.7901	20.2203	20.6506	21.5110
223	.9183	.3485	.7787	.2089	.6391	.0694	.4996	.9298	.3600	.7903	.2205	.6507	.5112
226	.9184	.3486	.7788	.2090	.6393	.0695	.4997	.9299	.3602	.7904	.2206	.6508	.5113
229	.9185	.3487	.7789	.2092	.6394	.0696	.4998	.9301	.3603	.7905	.2208	.6510	.5115
232	.9186	.3488	.7790	.2093	.6395	.0697	.5000	.9302	.3604	.7907	.2209	.6511	.5116
430235	15.9187	16.3489	16.7792	17.2094	17.6396	18.0699	18.5001	18.9303	19.3606	19.7908	20.2210	20.6513	21.5118
238	.9188	.3490	.7793	.2095	.6398	.0700	.5002	.9305	.3607	.7909	.2212	.6514	.5119
241	.9189	.3492	.7794	.2096	.6399	.0701	.5004	.9306	.3608	.7911	.2213	.6516	.5121
244	.9190	.3493	.7795	.2098	.6400	.0702	.5005	.9307	.3610	.7912	.2215	.6517	.5122
247	.9191	.3494	.7796	.2099	.6401	.0704	.5006	.9309	.3611	.7914	.2216	.6519	.5124
430250	15.9193	16.3495	16.7798	17.2100	17.6403	18.0705	18.5008	18.9310	19.3613	19.7915	20.2218	20.6520	21.5125
253	.9194	.3496	.7799	.2101	.6404	.0706	.5009	.9311	.3614	.7916	.2219	.6521	.5127
256	.9195	.3497	.7800	.2102	.6405	.0708	.5010	.9313	.3615	.7918	.2220	.6523	.5128
259	.9196	.3498	.7801	.2104	.6406	.0709	.5011	.9314	.3617	.7919	.2222	.6524	.5130
262	.9197	.3500	.7802	.2105	.6407	.0710	.5013	.9315	.3618	.7921	.2223	.6526	.5131
430265	15.9198	16.3501	16.7803	17.2106	17.6409	18.0711	18.5014	18.9317	19.3619	19.7922	20.2225	20.6527	21.5133
268	.9199	.3502	.7805	.2107	.6410	.0713	.5015	.9318	.3621	.7923	.2226	.6529	.5134
271	.9200	.3503	.7806	.2108	.6411	.0714	.5017	.9319	.3622	.7925	.2227	.6530	.5136
274	.9201	.3504	.7807	.2110	.6412	.0715	.5018	.9321	.3623	.7926	.2229	.6532	.5137
277	.9202	.3505	.7808	.2111	.6414	.0716	.5019	.9322	.3625	.7927	.2230	.6533	.5139
430280	15.9204	16.3506	16.7809	17.2112	17.6415	18.0718	18.5020	18.9323	19.3626	19.7929	20.2232	20.6534	21.5140
283	.9205	.3508	.7810	.2113	.6416	.0719	.5022	.9325	.3627	.7930	.2233	.6536	.5142
286	.9206	.3509	.7812	.2114	.6417	.0720	.5023	.9326	.3629	.7932	.2234	.6537	.5143
289	.9207	.3510	.7813	.2116	.6418	.0721	.5024	.9327	.3630	.7933	.2236	.6539	.5145
292	.9208	.3511	.7814	.2117	.6420	.0723	.5026	.9328	.3631	.7934	.2237	.6540	.5146
430295	15.9209	16.3512	16.7815	17.2118	17.6421	18.0724	18.5027	18.9330	19.3633	19.7936	20.2239	20.6542	21.5148
298	.9210	.3513	.7816	.2119	.6422	.0725	.5028	.9331	.3634	.7937	.2240	.6543	.5149
301	.9211	.3514	.7817	.2120	.6423	.0726	.5029	.9332	.3635	.7938	.2241	.6544	.5151
304	.9212	.3516	.7819	.2122	.6425	.0728	.5031	.9334	.3637	.7940	.2243	.6546	.5152
307	.9214	.3517	.7820	.2123	.6426	.0729	.5032	.9335	.3638	.7941	.2244	.6547	.5154
430310	15.9215	16.3518	16.7821	17.2124	17.6427	18.0730	18.5033	18.9336	19.3640	19.7943	20.2246	20.6549	21.5155
313	.9216	.3519	.7822	.2125	.6428	.0731	.5035	.9338	.3641	.7944	.2247	.6550	.5157
316	.9217	.3520	.7823	.2126	.6430	.0733	.5036	.9339	.3642	.7945	.2249	.6552	.5158
319	.9218	.3521	.7824	.2128	.6431	.0734	.5037	.9340	.3644	.7947	.2250	.6553	.5160
322	.9219	.3522	.7826	.2129	.6432	.0735	.5038	.9342	.3645	.7948	.2251	.6555	.5161
430325	15.9220	16.3524	16.7827	17.2130	17.6433	18.0737	18.5040	18.9343	19.3646	19.7950	20.2253	20.6556	21.5163
328	.9221	.3525	.7828	.2131	.6434	.0738	.5041	.9344	.3648	.7951	.2254	.6557	.5164
331	.9222	.3526	.7829	.2132	.6436	.0739	.5042	.9346	.3649	.7952	.2256	.6559	.5166
334	.9224	.3527	.7830	.2134	.6437	.0740	.5044	.9347	.3650	.7954	.2257	.6560	.5167
337	.9225	.3528	.7831	.2135	.6438	.0742	.5045	.9348	.3652	.7955	.2258	.6562	.5169
430340	15.9226	16.3529	16.7833	17.2136	17.6439	18.0743	18.5046	18.9350	19.3653	19.7956	20.2260	20.6563	21.5170
343	.9227	.3530	.7834	.2137	.6441	.0744	.5047	.9351	.3654	.7958	.2261	.6565	.5172
346	.9228	.3531	.7835	.2138	.6442	.0745	.5049	.9352	.3656	.7959	.2263	.6566	.5173
349	.9229	.3533	.7836	.2140	.6443	.0747	.5050	.9354	.3657	.7961	.2264	.6568	.5175
352	.9230	.3534	.7837	.2141	.6444	.0748	.5051	.9355	.3658	.7962	.2265	.6569	.5176
430355	15:9231	16.3535	16.7838	17.2142	17.4646	18.0749	18.5053	18.9356	19.3660	19.7963	20.2267	20.6570	21.5178
358	.9232	.3536	.7840	.2143	.6447	.0750	.5054	.9358	.3661	.7965	.2268	.6572	.5179
361	.9234	.3537	.7841	.2144	.6448	.0752	.5055	.9359	.3662	.7966	.2270	.6573	.5181
364	.9235	.3538	.7842	.2146	.6449	.0753	.5057	.9360	.3664	.7967	.2271	.6575	.5182
367	.9236	.3539	.7843	.2147	.6450	.0754	.5058	.9361	.3665	.7969	.2272	.6576	.5184
430370	15.9237	16.3541	16.7844	17.2148	17.6452	18.0755	18.5059	18.9363	19.3667	19.7970	20.2274	20.6578	21.5185
373	.9238	.3542	.7845	.2149	.6453	.0757	.5060	.9364	.3668	.7972	.2275	.6579	.5187
376	.9239	.3543	.7847	.2150	.6454	.0758	.5062	.9365	.3669	.7973	.2277	.6580	.5188
379	.9240	.3544	.7848	.2152	.6455	.0759	.5063	.9367	.3671	.7974	.2278	.6582	.5190
382	.9241	.3545	.7849	.2153	.6457	.0760	.5064	.9368	.3672	.7976	.2280	.6583	.5191
430385	15.9242	16.3546	16.7850	17.2154	17.6458	18.0762	18.5066	18.9369	19.3673	19.7977	20.2281	20.6585	21.5193
388	.9244	.3547	.7851	.2155	.6459	.0763	.5067	.9371	.3675	.7978	.2282	.6586	.5194
391	.9245	.3549	.7852	.2156	.6460	.0764	.5068	.9372	.3676	.7980	.2284	.6588	.5196
394	.9246	.3550	.7854	.2158	.6462	.0765	.5069	.9373	.3677	.7981	.2285	.6589	.5197
397	.9247	.3551	.7855	.2159	.6463	.0767	.5071	.9375	.3679	.7983	.2287	.6591	.5199
430400	15.9248	16.3552	16.7856	17.2160	17.6464	18.0768	18.5072	18.9376	19.3680	19.7984	20.2288	20.6592	21.5200

HARMONICS

BASIC FREQ.	24	25	26	27	28	29	30	31	32	33	34	35	36
430400	10.3296	10.7600	11.1904	11.6208	12.0512	12.4816	12.9120	13.3424	13.7728	14.2032	14.6336	15.0640	15.4944
403	.3297	.7601	.1905	.6209	.0513	.4817	.9121	.3425	.7729	.2033	.6337	.0641	.4945
406	.3297	.7602	.1906	.6210	.0514	.4818	.9122	.3426	.7730	.2034	.6338	.0642	.4946
409	.3298	.7602	.1906	.6210	.0515	.4819	.9123	.3427	.7731	.2035	.6339	.0643	.4947
412	.3299	.7603	.1907	.6211	.0515	.4819	.9124	.3428	.7732	.2036	.6340	.0644	.4948
430415	11.3300	10.7604	11.1908	11.6212	12.0516	12.4820	12.9125	13.3429	13.7733	14.2037	14.6341	15.0645	15.4949
418	.3300	.7605	.1909	.6213	.0517	.4821	.9125	.3430	.7734	.2038	.6342	.0646	.4950
421	.3301	.7605	.1909	.6214	.0518	.4822	.9126	.3431	.7735	.2039	.6343	.0647	.4952
424	.3302	.7606	.1910	.6214	.0519	.4823	.9127	.3431	.7736	.2040	.6344	.0648	.4953
427	.3302	.7607	.1911	.6215	.0520	.4824	.9128	.3432	.7737	.2041	.6345	.0649	.4954
430430	10.3303	10.7608	11.1912	11.6216	12.0520	12.4825	12.9129	13.3433	13.7738	14.2042	14.6346	15.0651	15.4955
433	.3304	.7608	.1913	.6217	.0521	.4826	.9130	.3434	.7739	.2043	.6347	.0652	.4956
436	.3305	.7609	.1913	.6218	.0522	.4826	.9131	.3435	.7740	.2044	.6348	.0653	.4957
439	.3305	.7610	.1914	.6219	.0523	.4827	.9132	.3436	.7740	.2045	.6349	.0654	.4958
442	.3306	.7611	.1915	.6219	.0524	.4828	.9133	.3437	.7741	.2046	.6350	.0655	.4959
430445	10.3307	10.7611	11.1916	11.6220	12.0525	12.4829	12.9134	13.3438	13.7742	14.2047	14.6351	15.0656	15.4960
448	.3308	.7612	.1916	.6221	.0525	.4830	.9134	.3439	.7743	.2048	.6352	.0657	.4961
451	.3308	.7613	.1917	.6222	.0526	.4831	.9135	.3440	.7744	.2049	.6353	.0658	.4962
454	.3309	.7614	.1918	.6223	.0527	.4832	.9136	.3441	.7745	.2050	.6354	.0659	.4963
457	.3310	.7614	.1919	.6223	.0528	.4833	.9137	.3442	.7746	.2051	.6355	.0660	.4965
430460	10.3310	10.7615	11.1920	11.6224	12.0529	12.4833	12.9138	13.3443	13.7747	14.2052	14.6356	15.0661	15.4966
463	.3311	.7616	.1920	.6225	.0530	.4834	.9139	.3444	.7748	.2053	.6357	.0662	.4967
466	.3312	.7617	.1921	.6226	.0530	.4835	.9140	.3444	.7749	.2054	.6358	.0663	.4968
469	.3313	.7617	.1922	.6227	.0531	.4836	.9141	.3445	.7750	.2055	.6359	.0664	.4969
472	.3313	.7618	.1923	.6227	.0532	.4837	.9142	.3446	.7751	.2056	.6360	.0665	.4970
430475	10.3314	10.7619	11.1924	11.6228	12.0533	12.4838	12.9143	13.3447	13.7752	14.2057	14.6362	15.0666	15.4971
478	.3315	.7620	.1924	.6229	.0534	.4839	.9143	.3448	.7753	.2058	.6363	.0667	.4972
481	.3315	.7620	.1925	.6230	.0535	.4839	.9144	.3449	.7754	.2059	.6364	.0668	.4973
484	.3316	.7621	.1926	.6231	.0536	.4840	.9145	.3450	.7755	.2060	.6365	.0669	.4974
487	.3317	.7622	.1927	.6231	.0536	.4841	.9146	.3451	.7756	.2061	.6366	.0670	.4975
430490	10.3318	10.7623	11.1927	11.6232	12.0537	12.4842	12.9147	13.3452	13.7757	14.2062	14.6367	15.0672	15.4976
493	.3318	.7623	.1928	.6233	.0538	.4843	.9148	.3453	.7758	.2063	.6368	.0673	.4977
496	.3319	.7624	.1929	.6234	.0539	.4844	.9149	.3454	.7759	.2064	.6369	.0674	.4979
499	.3320	.7625	.1930	.6235	.0540	.4845	.9150	.3455	.7760	.2065	.6370	.0675	.4980
502	.3320	.7626	.1931	.6236	.0541	.4846	.9151	.3456	.7761	.2066	.6371	.0676	.4981
430505	10.3321	10.7626	11.1931	11.6236	12.0541	12.4846	12.9152	13.3457	13.7762	14.2067	14.6372	15.0677	15.4982
508	.3322	.7627	.1932	.6237	.0542	.4847	.9152	.3457	.7763	.2068	.6373	.0678	.4983
511	.3323	.7628	.1933	.6238	.0543	.4848	.9153	.3458	.7764	.2069	.6374	.0679	.4984
514	.3323	.7629	.1934	.6239	.0544	.4849	.9154	.3459	.7764	.2070	.6375	.0680	.4985
517	.3324	.7629	.1934	.6240	.0545	.4850	.9155	.3460	.7765	.2071	.6376	.0681	.4986
430520	10.3325	10.7630	11.1935	11.6240	12.0546	12.4851	12.9156	13.3461	13.7766	14.2072	14.6377	15.0682	15.4987
523	.3326	.7631	.1936	.6241	.0546	.4852	.9157	.3462	.7767	.2073	.6378	.0683	.4988
526	.3326	.7632	.1937	.6242	.0547	.4853	.9158	.3463	.7768	.2074	.6379	.0684	.4989
529	.3327	.7632	.1938	.6243	.0548	.4853	.9159	.3464	.7769	.2075	.6380	.0685	.4990
532	.3328	.7633	.1938	.6244	.0549	.4854	.9160	.3465	.7770	.2076	.6381	.0686	.4992
430535	10.3328	10.7634	11.1939	11.6244	12.0550	12.4855	12.9161	13.3466	13.7771	14.2077	14.6382	15.0687	15.4993
538	.3329	.7635	.1940	.6245	.0551	.4856	.9161	.3467	.7772	.2078	.6383	.0688	.4994
541	.3330	.7635	.1941	.6246	.0551	.4857	.9162	.3468	.7773	.2079	.6384	.0689	.4995
544	.3331	.7636	.1941	.6247	.0552	.4858	.9163	.3469	.7774	.2080	.6385	.0690	.4996
547	.3331	.7637	.1942	.6248	.0553	.4859	.9164	.3470	.7775	.2081	.6386	.0691	.4997
430550	10.3332	10.7638	11.1943	11.6249	12.0554	12.4860	12.9165	13.3471	13.7776	14.2082	14.6387	15.0693	15.4998
553	.3333	.7638	.1944	.6249	.0555	.4860	.9166	.3471	.7777	.2082	.6388	.0694	.4999
556	.3333	.7639	.1945	.6250	.0556	.4861	.9167	.3472	.7778	.2083	.6389	.0695	.5000
559	.3334	.7640	.1945	.6251	.0557	.4862	.9168	.3473	.7779	.2084	.6390	.0696	.5001
562	.3335	.7641	.1946	.6252	.0557	.4863	.9169	.3474	.7780	.2085	.6391	.0697	.5002
430565	10.3336	10.7641	11.1947	11.6253	12.0558	12.4864	12.9170	13.3475	13.7781	14.2086	14.6392	15.0698	15.5003
568	.3336	.7642	.1948	.6253	.0559	.4865	.9170	.3476	.7782	.2087	.6393	.0699	.5004
571	.3337	.7643	.1948	.6254	.0560	.4866	.9171	.3477	.7783	.2088	.6394	.0700	.5006
574	.3338	.7644	.1949	.6255	.0561	.4866	.9172	.3478	.7784	.2089	.6395	.0701	.5007
577	.3338	.7644	.1950	.6256	.0562	.4867	.9173	.3479	.7785	.2090	.6396	.0702	.5008
430580	10.3339	10.7645	11.1951	11.6257	12.0562	12.4868	12.9174	13.3480	13.7786	14.2091	14.6397	15.0703	15.5009
583	.3340	.7646	.1952	.6257	.0563	.4869	.9175	.3481	.7787	.2092	.6398	.0704	.5010
586	.3341	.7647	.1952	.6258	.0564	.4870	.9176	.3482	.7788	.2093	.6399	.0705	.5011
589	.3341	.7647	.1953	.6259	.0565	.4871	.9177	.3483	.7788	.2094	.6400	.0706	.5012
592	.3342	.7648	.1954	.6260	.0566	.4872	.9178	.3484	.7789	.2095	.6401	.0707	.5013
430595	10.3343	10.7649	11.1955	11.6261	12.0567	12.4873	12.9179	13.3484	13.7790	14.2096	14.6402	15.0708	15.5014
598	.3344	.7650	.1955	.6261	.0567	.4873	.9179	.3485	.7791	.2097	.6403	.0709	.5015
601	.3344	.7650	.1956	.6262	.0568	.4874	.9180	.3486	.7792	.2098	.6404	.0710	.5016
604	.3345	.7651	.1957	.6263	.0569	.4875	.9181	.3487	.7793	.2099	.6405	.0711	.5017
607	.3346	.7652	.1958	.6264	.0570	.4876	.9182	.3488	.7794	.2100	.6406	.0712	.5019
430610	10.3346	10.7653	11.1959	11.6265	12.0571	12.4877	12.9183	13.3489	13.7795	14.2101	14.6407	15.0714	15.5020
613	.3347	.7653	.1959	.6266	.0572	.4878	.9184	.3490	.7796	.2102	.6408	.0715	.5021
616	.3348	.7654	.1960	.6266	.0572	.4879	.9185	.3491	.7797	.2103	.6409	.0716	.5022
619	.3349	.7655	.1961	.6267	.0573	.4880	.9186	.3492	.7798	.2104	.6410	.0717	.5023
622	.3349	.7656	.1962	.6268	.0574	.4880	.9187	.3493	.7799	.2105	.6411	.0718	.5024
430625	10.3350	10.7656	11.1963	11.6269	12.0575	12.4881	12.9188	13.3494	13.7800	14.2106	14.6413	15.0719	15.5025
628	.3351	.7657	.1963	.6270	.0576	.4882	.9188	.3495	.7801	.2107	.6414	.0720	.5026
631	.3351	.7658	.1964	.6270	.0577	.4883	.9189	.3496	.7802	.2108	.6415	.0721	.5027
634	.3352	.7659	.1965	.6271	.0578	.4884	.9190	.3497	.7803	.2109	.6416	.0722	.5028
637	.3353	.7659	.1966	.6272	.0578	.4885	.9191	.3497	.7804	.2110	.6417	.0723	.5029
430640	10.3354	10.7660	11.1966	11.6273	12.0579	12.4886	12.9192	13.3498	13.7805	14.2111	14.6418	15.0724	15.5030
643	.3354	.7661	.1967	.6274	.0580	.4886	.9193	.3499	.7806	.2112	.6419	.0725	.5031
646	.3355	.7662	.1968	.6274	.0581	.4887	.9194	.3500	.7807	.2113	.6420	.0726	.5033
649	.3356	.7662	.1969	.6275	.0582	.4888	.9195	.3501	.7808	.2114	.6421	.0727	.5034
652	.3356	.7663	.1970	.6276	.0583	.4889	.9196	.3502	.7809	.2115	.6422	.0728	.5035
430655	10.3357	10.7664	11.1970	11.6277	12.0583	12.4890	12.9197	13.3503	13.7810	14.2116	14.6423	15.0729	15.5036
658	.3358	.7665	.1971	.6278	.0584	.4891	.9197	.3504	.7811	.2117	.6424	.0730	.5037
661	.3359	.7665	.1972	.6278	.0585	.4892	.9198	.3505	.7812	.2118	.6425	.0731	.5038
664	.3359	.7666	.1973	.6279	.0586	.4893	.9199	.3506	.7812	.2119	.6426	.0732	.5039
667	.3360	.7667	.1973	.6280	.0587	.4893	.9200	.3507	.7813	.2120	.6427	.0733	.5040
430670	10.3361	10.7668	11.1974	11.6281	12.0588	12.4894	12.9201	13.3508	13.7814	14.2121	14.6428	15.0735	15.5041
673	.3362	.7668	.1975	.6282	.0588	.4895	.9202	.3509	.7815	.2122	.6429	.0736	.5042
676	.3362	.7669	.1976	.6283	.0589	.4896	.9203	.3510	.7816	.2123	.6430	.0737	.5043
679	.3363	.7670	.1977	.6283	.0590	.4897	.9204	.3510	.7817	.2124	.6431	.0738	.5044
682	.3364	.7671	.1977	.6284	.0591	.4898	.9205	.3511	.7818	.2125	.6432	.0739	.5046
430685	10.3364	10.7671	11.1978	11.6285	12.0592	12.4899	12.9206	13.3512	13.7819	14.3126	14.6433	15.0740	15.5047
688	.3365	.7672	.1979	.6286	.0593	.4900	.9206	.3513	.7820	.2127	.6434	.0741	.5048
691	.3366	.7673	.1980	.6287	.0593	.4900	.9207	.3514	.7821	.2128	.6435	.0742	.5049
694	.3367	.7674	.1980	.6287	.0594	.4901	.9208	.3515	.7822	.2129	.6436	.0743	.5050
697	.3367	.7674	.1981	.6288	.0595	.4902	.9209	.3516	.7823	.2130	.6437	.0744	.5051
430700	10.3368	10.7675	11.1982	11.6289	12.0596	12.4903	12.9210	13.3517	13.7824	14.2131	14.6438	15.0745	15.5052

MEGACYCLES PER SECOND

BASIC FREQ.	HARMONICS												
	37	38	39	40	41	42	43	44	45	46	47	48	50
430400	15.9248	16.3552	16.7856	17.2160	17.6464	18.0768	18.5072	18.9376	19.3680	19.7984	20.2288	20.6592	21.5200
403	.9249	.3553	.7857	.2161	.6465	.0769	.5073	.9377	.3681	.7985	.2289	.6593	.5202
406	.9250	.3554	.7858	.2162	.6466	.0771	.5075	.9379	.3683	.7987	.2291	.6595	.5203
409	.9251	.3555	.7860	.2164	.6468	.0772	.5076	.9380	.3684	.7988	.2292	.6596	.5205
412	.9252	.3557	.7861	.2165	.6469	.0773	.5077	.9381	.3685	.7990	.2294	.6598	.5206
430415	15.9254	16.3558	16.7862	17.2166	17.6470	18.0774	18.5078	18.9383	19.3687	19.7991	20.2295	20.6599	21.5208
418	.9255	.3559	.7863	.2167	.6471	.0776	.5080	.9384	.3688	.7992	.2296	.6601	.5209
421	.9256	.3560	.7864	.2168	.6473	.0777	.5081	.9385	.3689	.7994	.2298	.6602	.5211
424	.9257	.3561	.7865	.2170	.6474	.0778	.5082	.9387	.3691	.7995	.2299	.6604	.5212
427	.9258	.3562	.7867	.2171	.6475	.0779	.5084	.9388	.3692	.7996	.2301	.6605	.5214
430430	15.9259	16.3563	16.7868	17.2172	17.6476	18.0781	18.5085	18.9389	19.3694	19.7998	20.2302	20.6606	21.5215
433	.9260	.3565	.7869	.2173	.6478	.0782	.5086	.9391	.3695	.7999	.2304	.6608	.5217
436	.9261	.3566	.7870	.2174	.6479	.0783	.5087	.9392	.3696	.8001	.2305	.6609	.5218
439	.9262	.3567	.7871	.2176	.6480	.0784	.5089	.9393	.3698	.8002	.2306	.6611	.5220
442	.9264	.3568	.7872	.2177	.6481	.0786	.5090	.9394	.3699	.8003	.2308	.6612	.5221
430445	15.9265	16.3569	16.7874	17.2178	17.6482	18.0787	18.5091	18.9396	19.3700	19.8005	20.2309	20.6614	21.5223
448	.9266	.3570	.7875	.2179	.6484	.0788	.5093	.9397	.3702	.8006	.2311	.6615	.5224
451	.9267	.3571	.7876	.2180	.6485	.0789	.5094	.9398	.3703	.8007	.2312	.6616	.5226
454	.9268	.3573	.7877	.2182	.6486	.0791	.5095	.9400	.3704	.8009	.2313	.6618	.5227
457	.9269	.3574	.7878	.2183	.6487	.0792	.5097	.9401	.3706	.8010	.2315	.6619	.5229
430460	15.9270	16.3575	16.7879	17.2184	17.6489	18.0793	18.5098	18.9402	19.3707	19.8012	20.2316	20.6621	21.5230
463	.9271	.3576	.7881	.2185	.6490	.0794	.5099	.9404	.3708	.8013	.2318	.6622	.5232
466	.9272	.3577	.7882	.2186	.6491	.0796	.5100	.9405	.3710	.8014	.2319	.6624	.5233
469	.9274	.3578	.7883	.2188	.6492	.0797	.5102	.9406	.3711	.8016	.2320	.6625	.5235
472	.9275	.3579	.7884	.2189	.6494	.0798	.5103	.9408	.3712	.8017	.2322	.6627	.5236
430475	15.9276	16.3581	16.7885	17.2190	17.6495	18.0800	18.5104	18.9409	19.3714	19.8019	20.2323	20.6628	21.5238
478	.9277	.3582	.7886	.2191	.6496	.0801	.5106	.9410	.3715	.8020	.2325	.6629	.5239
481	.9278	.3583	.7888	.2192	.6497	.0802	.5107	.9412	.3716	.8021	.2326	.6631	.5241
484	.9279	.3584	.7889	.2194	.6498	.0803	.5108	.9413	.3718	.8023	.2327	.6632	.5242
487	.9280	.3585	.7890	.2195	.6500	.0805	.5109	.9414	.3719	.8024	.2329	.6634	.5244
430490	15.9281	16.3586	16.7891	17.2196	17.6501	18.0806	18.5111	18.9416	19.3721	19.8025	20.2330	20.6635	21.5245
493	.9282	.3587	.7892	.2197	.6502	.0807	.5112	.9417	.3722	.8027	.2332	.6637	.5247
496	.9284	.3588	.7893	.2198	.6503	.0808	.5113	.9418	.3723	.8028	.2333	.6638	.5248
499	.9285	.3590	.7895	.2200	.6505	.0810	.5115	.9420	.3725	.8030	.2335	.6640	.5250
502	.9286	.3591	.7896	.2201	.6506	.0811	.5116	.9421	.3726	.8031	.2336	.6641	.5251
430505	15.9287	16.3592	16.7897	17.2202	17.6507	18.0812	18.5117	18.9422	19.3727	19.8032	20.2337	20.6642	21.5253
508	.9288	.3593	.7898	.2203	.6508	.0813	.5118	.9424	.3729	.8034	.2339	.6644	.5254
511	.9289	.3594	.7899	.2204	.6510	.0815	.5120	.9425	.3730	.8035	.2340	.6645	.5256
514	.9290	.3595	.7900	.2206	.6511	.0816	.5121	.9426	.3731	.8036	.2342	.6647	.5257
517	.9291	.3596	.7902	.2207	.6512	.0817	.5122	.9427	.3733	.8038	.2343	.6648	.5259
430520	15.9292	16.3598	16.7903	17.2208	17.6513	18.0818	18.5124	18.9429	19.3734	19.8039	20.2344	20.6650	21.5260
523	.9294	.3599	.7904	.2209	.6514	.0820	.5125	.9430	.3735	.8041	.2346	.6651	.5262
526	.9295	.3600	.7905	.2210	.6516	.0821	.5126	.9431	.3737	.8042	.2347	.6652	.5263
529	.9296	.3601	.7906	.2212	.6517	.0822	.5127	.9433	.3738	.8043	.2349	.6654	.5265
532	.9297	.3602	.7907	.2213	.6518	.0823	.5129	.9434	.3739	.8045	.2350	.6655	.5266
430535	15.9298	16.3603	16.7909	17.2214	17.6519	18.0825	18.5130	18.9435	19.3741	19.8046	20.2351	20.6657	21.5268
538	.9299	.3604	.7910	.2215	.6521	.0826	.5131	.9437	.3742	.8047	.2353	.6658	.5269
541	.9300	.3606	.7911	.2216	.6522	.0827	.5133	.9438	.3743	.8049	.2354	.6660	.5271
544	.9301	.3607	.7912	.2218	.6523	.0828	.5134	.9439	.3745	.8050	.2356	.6661	.5272
547	.9302	.3608	.7913	.2219	.6524	.0830	.5135	.9441	.3746	.8052	.2357	.6663	.5274
430550	15:9304	16.3609	16.7915	17.2220	17.6526	18.0831	18.5137	18.9442	19.3748	19.8053	20.2359	20.6664	21.5275
553	.9305	.3610	.7916	.2221	.6527	.0832	.5138	.9443	.3749	.8054	.2360	.6665	.5277
556	.9306	.3611	.7917	.2222	.6528	.0834	.5139	.9445	.3750	.8056	.2361	.6667	.5278
559	.9307	.3612	.7918	.2224	.6529	.0835	.5140	.9446	.3752	.8057	.2363	.6668	.5280
562	.9308	.3614	.7919	.2225	.6530	.0836	.5142	.9447	.3753	.8059	.2364	.6670	.5281
430565	15.9309	16.3615	16.7920	17.2226	17.6532	18.0837	18.5143	18.9449	19.3754	19.8060	20.2366	20.6671	21.5283
568	.9310	.3616	.7922	.2227	.6533	.0839	.5144	.9450	.3756	.8061	.2367	.6673	.5284
571	.9311	.3617	.7923	.2228	.6534	.0840	.5146	.9451	.3757	.8063	.2368	.6674	.5286
574	.9312	.3618	.7924	.2230	.6535	.0841	.5147	.9453	.3758	.8064	.2370	.6676	.5287
577	.9313	.3619	.7925	.2231	.6537	.0842	.5148	.9454	.3760	.8065	.2371	.6677	.5289
430580	15.9315	16.3620	16.7926	17.2232	17.6538	18.0844	18.5149	18.9455	19.3761	19.8067	20.2373	20.6678	21.5290
583	.9316	.3622	.7927	.2233	.6539	.0845	.5151	.9457	.3762	.8068	.2374	.6680	.5292
586	.9317	.3623	.7929	.2234	.6540	.0846	.5152	.9458	.3764	.8070	.2375	.6681	.5293
589	.9318	.3624	.7930	.2236	.6541	.0847	.5153	.9459	.3765	.8071	.2377	.6683	.5295
592	.9319	.3625	.7931	.2237	.6543	.0849	.5155	.9460	.3766	.8072	.2378	.6684	.5296
430595	15.9320	16.3626	16.7932	17.2238	17.6544	18.0850	18.5156	18.9462	19.3768	19.8074	20.2380	20.6686	21.5298
598	.9321	.3627	.7933	.2239	.6545	.0851	.5157	.9463	.3769	.8075	.2381	.6687	.5299
601	.9322	.3628	.7934	.2240	.6546	.0852	.5158	.9464	.3770	.8076	.2382	.6688	.5301
604	.9323	.3630	.7936	.2242	.6548	.0854	.5160	.9466	.3772	.8078	.2384	.6690	.5302
607	.9325	.3631	.7937	.2243	.6549	.0855	.5161	.9467	.3773	.8079	.2385	.6691	.5304
430610	15.9326	16.3632	16.7938	17.2244	17.6550	18.0856	18.5162	18.9468	19.3775	19.8081	20.2387	20.6693	21.5305
613	.9327	.3633	.7939	.2245	.6551	.0857	.5164	.9470	.3776	.8082	.2388	.6694	.5307
616	.9328	.3634	.7940	.2246	.6553	.0859	.5165	.9471	.3777	.8083	.2390	.6696	.5308
619	.9329	.3635	.7941	.2248	.6554	.0860	.5166	.9472	.3779	.8085	.2391	.6697	.5310
622	.9330	.3636	.7943	.2249	.6555	.0861	.5167	.9474	.3780	.8086	.2392	.6699	.5311
430625	15.9331	16.3638	16.7944	17.2250	17.6556	18.0863	18.5169	18.9475	19.3781	19.8088	20.2394	20.6700	21.5313
628	.9332	.3639	.7945	.2251	.6557	.0864	.5170	.9476	.3783	.8089	.2395	.6701	.5314
631	.9333	.3640	.7946	.2252	.6559	.0865	.5171	.9478	.3784	.8090	.2397	.6703	.5316
634	.9335	.3641	.7947	.2254	.6560	.0866	.5173	.9479	.3785	.8092	.2398	.6704	.5317
637	.9336	.3642	.7948	.2255	.6561	.0868	.5174	.9480	.3787	.8093	.2399	.6706	.5319
430640	15.9337	16.3643	16.7950	17.2256	17.6562	18.0869	18.5175	18.9482	19.3788	19.8094	20.2401	20.6707	21.5320
643	.9338	.3644	.7951	.2257	.6564	.0870	.5176	.9483	.3789	.8096	.2402	.6709	.5322
646	.9339	.3645	.7952	.2258	.6565	.0871	.5178	.9484	.3791	.8097	.2404	.6710	.5323
649	.9340	.3647	.7953	.2260	.6566	.0873	.5179	.9486	.3792	.8099	.2405	.6712	.5325
652	.9341	.3648	.7954	.2261	.6567	.0874	.5180	.9487	.3793	.8100	.2406	.6713	.5326
430655	15.9342	16.3649	16.7955	17.2262	17.6569	18.0875	18.5182	18.9488	19.3795	19.8101	20.2408	20.6714	21.5328
658	.9343	.3650	.7957	.2263	.6570	.0876	.5183	.9490	.3796	.8103	.2409	.6716	.5329
661	.9345	.3651	.7958	.2264	.6571	.0878	.5184	.9491	.3797	.8104	.2411	.6717	.5331
664	.9346	.3652	.7959	.2266	.6572	.0879	.5186	.9492	.3799	.8105	.2412	.6719	.5332
667	.9347	.3653	.7960	.2267	.6573	.0880	.5187	.9493	.3800	.8107	.2413	.6720	.5334
430670	15.9348	16.3655	16.7961	17.2268	17.6575	18.0881	18.5188	18.9495	19.3802	19.8108	20.2415	20.6722	21.5335
673	.9349	.3656	.7962	.2269	.6576	.0883	.5189	.9496	.3803	.8110	.2416	.6723	.5337
676	.9350	.3657	.7964	.2270	.6577	.0884	.5191	.9497	.3804	.8111	.2418	.6724	.5338
679	.9351	.3658	.7965	.2272	.6578	.0885	.5192	.9499	.3806	.8112	.2419	.6726	.5340
682	.9352	.3659	.7966	.2273	.6580	.0886	.5193	.9500	.3807	.8114	.2421	.6727	.5341
430685	15.9353	16.3660	16.7967	17.2274	17.6581	18.0888	18.5195	18.9501	19.3808	19.8115	20.2422	20.6729	21.5343
688	.9355	.3661	.7968	.2275	.6582	.0889	.5196	.9503	.3810	.8116	.2423	.6730	.5344
691	.9356	.3663	.7969	.2276	.6583	.0890	.5197	.9504	.3811	.8118	.2425	.6732	.5346
694	.9357	.3664	.7971	.2278	.6585	.0891	.5198	.9505	.3812	.8119	.2426	.6733	.5347
697	.9358	.3665	.7972	.2279	.6586	.0893	.5200	.9507	.3814	.8121	.2428	.6735	.5349
430700	15.9359	16.3666	16.7973	17.2280	17.6587	18.0894	18.5201	18.9508	19.3815	19.8122	20.2429	20.6736	21.5350

MEGACYCLES PER SECOND

HARMONICS

BASIC FREQ.	24	25	26	27	28	29	30	31	32	33	34	35	36
430700	10.3368	10.7675	11.1982	11.6289	12.0596	12.4903	12.9210	13.3517	13.7824	14.2131	14.6438	15.0745	15.5052
703	.3369	.7676	.1983	.6290	.0597	.4904	.9211	.3518	.7825	.2132	.6439	.0746	.5053
706	.3369	.7677	.1984	.6291	.0598	.4905	.9212	.3519	.7826	.2133	.6440	.0747	.5054
709	.3370	.7677	.1984	.6291	.0599	.4906	.9213	.3520	.7827	.2134	.6441	.0748	.5055
712	.3371	.7678	.1985	.6292	.0599	.4906	.9214	.3521	.7828	.2135	.6442	.0749	.5056
430715	10.3372	10.7679	11.1986	11.6293	12.0600	12.4907	12.9215	13.3522	13.7829	14.2136	14.6443	15.0750	15.5057
718	.3372	.7680	.1987	.6294	.0601	.4908	.9215	.3523	.7830	.2137	.6444	.0751	.5058
721	.3373	.7680	.1987	.6295	.0602	.4909	.9216	.3524	.7831	.2138	.6445	.0752	.5060
724	.3374	.7681	.1988	.6295	.0603	.4910	.9217	.3524	.7832	.2139	.6446	.0753	.5061
727	.3374	.7682	.1989	.6296	.0604	.4911	.9218	.3525	.7833	.2140	.6447	.0754	.5062
430730	10.3375	10.7683	11.1990	11.6297	12.0604	12.4912	12.9219	13.3526	13.7834	14.2141	14.6448	15.0756	15.5063
733	.3376	.7683	.1991	.6298	.0605	.4913	.9220	.3527	.7835	.2142	.6449	.0757	.5064
736	.3377	.7684	.1991	.6299	.0606	.4913	.9221	.3528	.7836	.2143	.6450	.0758	.5065
739	.3377	.7685	.1992	.6300	.0607	.4914	.9222	.3529	.7836	.2144	.6451	.0759	.5066
742	.3378	.7686	.1993	.6300	.0608	.4915	.9223	.3530	.7837	.2145	.6452	.0760	.5067
430745	10.3379	10.7686	11.1994	11.6301	12.0609	12.4916	12.9224	13.3531	13.7838	14.2146	14.6453	15.0761	15.5068
748	.3380	.7687	.1994	.6302	.0609	.4917	.9224	.3532	.7839	.2147	.6454	.0762	.5069
751	.3380	.7688	.1995	.6303	.0610	.4918	.9225	.3533	.7840	.2148	.6455	.0763	.5070
754	.3381	.7689	.1996	.6304	.0611	.4919	.9226	.3534	.7841	.2149	.6456	.0764	.5071
757	.3382	.7689	.1997	.6304	.0612	.4920	.9227	.3535	.7842	.2150	.6457	.0765	.5073
430760	10.3382	10.7690	11.1998	11.6305	12.0613	12.4920	12.9228	13.3536	13.7843	14.2151	14.6458	15.0766	15.5074
763	.3383	.7691	.1998	.6306	.0614	.4921	.9229	.3537	.7844	.2152	.6459	.0767	.5075
766	.3384	.7692	.1999	.6307	.0614	.4922	.9230	.3537	.7845	.2153	.6460	.0768	.5076
769	.3385	.7692	.2000	.6308	.0615	.4923	.9231	.3538	.7846	.2154	.6461	.0769	.5077
772	.3385	.7693	.2001	.6308	.0616	.4924	.9232	.3539	.7847	.2155	.6462	.0770	.5078
430775	10.3386	10.7694	11.2002	11.6309	12.0617	12.4925	12.9233	13.3540	13.7848	14.2156	14.6464	15.0771	15.5079
778	.3387	.7695	.2002	.6310	.0618	.4926	.9233	.3541	.7849	.2157	.6465	.0772	.5080
781	.3387	.7695	.2003	.6311	.0619	.4926	.9234	.3542	.7850	.2158	.6466	.0773	.5081
784	.3388	.7696	.2004	.6312	.0620	.4927	.9235	.3543	.7851	.2159	.6467	.0774	.5082
787	.3389	.7697	.2005	.6312	.0620	.4928	.9236	.3544	.7852	.2160	.6468	.0775	.5083
430790	10.3390	10.7698	11.2005	11.6313	12.0621	12.4929	12.9237	13.3545	13.7853	14.2161	14.6469	15.0777	15.5084
793	.3390	.7698	.2006	.6314	.0622	.4930	.9238	.3546	.7854	.2162	.6470	.0778	.5085
796	.3391	.7699	.2007	.6315	.0623	.4931	.9239	.3547	.7855	.2163	.6471	.0779	.5087
799	.3392	.7700	.2008	.6316	.0624	.4932	.9240	.3548	.7856	.2164	.6472	.0780	.5088
802	.3392	.7701	.2009	.6317	.0625	.4933	.9241	.3549	.7857	.2165	.6473	.0781	.5089
430805	10.3393	10.7701	11.2009	11.6317	12.0625	12.4933	12.9242	13.3550	13.7858	14.2166	14.6474	15.0782	15.5090
808	.3394	.7702	.2010	.6318	.0626	.4934	.9242	.3550	.7859	.2167	.6475	.0783	.5091
811	.3395	.7703	.2011	.6319	.0627	.4935	.9243	.3551	.7860	.2168	.6476	.0784	.5092
814	.3395	.7704	.2012	.6320	.0628	.4936	.9244	.3552	.7860	.2169	.6477	.0785	.5093
817	.3396	.7704	.2012	.6321	.0629	.4937	.9245	.3553	.7861	.2170	.6478	.0786	.5094
430820	10.3397	10.7705	11.2013	11.6321	12.0630	12.4938	12.9246	13.3554	13.7862	14.2171	14.6479	15.0787	15.5095
823	.3398	.7706	.2014	.6322	.0630	.4939	.9247	.3555	.7863	.2172	.6480	.0788	.5096
826	.3398	.7707	.2015	.6323	.0631	.4940	.9248	.3556	.7864	.2173	.6481	.0789	.5097
829	.3399	.7707	.2016	.6324	.0632	.4940	.9249	.3557	.7865	.2174	.6482	.0790	.5098
832	.3400	.7708	.2016	.6325	.0633	.4941	.9250	.3558	.7866	.2175	.6483	.0791	.5100
430835	10.3400	10.7709	11.2017	11.6325	12.0634	12.4942	12.9251	13.3559	13.7867	14.2176	14.6484	15.0792	15.5101
838	.3401	.7710	.2018	.6326	.0635	.4943	.9251	.3560	.7868	.2177	.6485	.0793	.5102
841	.3402	.7710	.2019	.6327	.0635	.4944	.9252	.3561	.7869	.2178	.6486	.0794	.5103
844	.3403	.7711	.2019	.6328	.0636	.4945	.9253	.3562	.7870	.2179	.6487	.0795	.5104
847	.3403	.7712	.2020	.6329	.0637	.4946	.9254	.3563	.7871	.2180	.6488	.0796	.5105
430850	10.3404	10.7713	11.2021	11.6330	12.0638	12.4947	12.9255	13.3564	13.7872	14.2181	14.6489	15.0798	15.5106
853	.3405	.7713	.2022	.6330	.0639	.4947	.9256	.3564	.7873	.2181	.6490	.0799	.5107
856	.3405	.7714	.2023	.6331	.0640	.4948	.9257	.3565	.7874	.2182	.6491	.0800	.5108
859	.3406	.7715	.2023	.6332	.0641	.4949	.9258	.3566	.7875	.2183	.6492	.0801	.5109
862	.3407	.7716	.2024	.6333	.0641	.4950	.9259	.3567	.7876	.2184	.6493	.0802	.5110
430865	10.3408	10.7716	11.2025	11.6334	12.0642	12.4951	12.9260	13.3568	13.7877	14.2185	14.6494	15.0803	15.5111
868	.3408	.7717	.2026	.6334	.0643	.4952	.9260	.3569	.7878	.2186	.6495	.0804	.5112
871	.3409	.7718	.2026	.6335	.0644	.4953	.9261	.3570	.7879	.2187	.6496	.0805	.5114
874	.3410	.7719	.2027	.6336	.0645	.4953	.9262	.3571	.7880	.2188	.6497	.0806	.5115
877	.3410	.7719	.2028	.6337	.0646	.4954	.9263	.3572	.7881	.2189	.6498	.0807	.5116
430880	10.3411	10.7720	11.2029	11.6338	12.0646	12.4955	12.9264	13.3573	13.7882	14.2190	14.6499	15.0808	15.5117
883	.3412	.7721	.2030	.6338	.0647	.4956	.9265	.3574	.7883	.2191	.6500	.0809	.5118
886	.3413	.7722	.2030	.6339	.0648	.4957	.9266	.3575	.7884	.2192	.6501	.0810	.5119
889	.3413	.7722	.2031	.6340	.0649	.4958	.9267	.3576	.7884	.2193	.6502	.0811	.5120
892	.3414	.7723	.2032	.6341	.0650	.4959	.9268	.3577	.7885	.2194	.6503	.0812	.5121
430895	10.3415	10.7724	11.2033	11.6342	12.0651	12.4960	12.9269	13.3577	13.7886	14.2195	14.6504	15.0813	15.5122
898	.3416	.7725	.2033	.6342	.0651	.4960	.9269	.3578	.7887	.2196	.6505	.0814	.5123
901	.3416	.7725	.2034	.6343	.0652	.4961	.9270	.3579	.7888	.2197	.6506	.0815	.5124
904	.3417	.7726	.2035	.6344	.0653	.4962	.9271	.3580	.7889	.2198	.6507	.0816	.5125
907	.3418	.7727	.2036	.6345	.0654	.4963	.9272	.3581	.7890	.2199	.6508	.0817	.5127
430910	10.3418	10.7728	11.2037	11.6346	12.0655	12.4964	12.9273	13.3582	13.7891	14.2200	14.6509	15.0819	15.5128
913	.3419	.7728	.2037	.6347	.0656	.4965	.9274	.3583	.7892	.2201	.6510	.0820	.5129
916	.3420	.7729	.2038	.6347	.0656	.4966	.9275	.3584	.7893	.2202	.6511	.0821	.5130
919	.3421	.7730	.2039	.6348	.0657	.4967	.9276	.3585	.7894	.2203	.6512	.0822	.5131
922	.3421	.7731	.2040	.6349	.0658	.4967	.9277	.3586	.7895	.2244	.6513	.0823	.5132
430925	10.3422	10.7731	11.2041	11.6350	12.0659	12.4968	12.9278	13.3587	13.7896	14.2205	14.6515	15.0824	15.5133
928	.3423	.7732	.2041	.6351	.0660	.4969	.9278	.3588	.7897	.2206	.6516	.0825	.5134
931	.3423	.7733	.2042	.6351	.0661	.4970	.9279	.3589	.7898	.2207	.6517	.0826	.5135
934	.3424	.7734	.2043	.6352	.0662	.4971	.9280	.3590	.7899	.2208	.6518	.0827	.5136
937	.3425	.7734	.2044	.6353	.0662	.4972	.9281	.3590	.7900	.2209	.6519	.0828	.5137
430940	10.3426	10.7735	11.2044	11.6354	12.0663	12.4973	12.9282	13.3591	13.7901	14.2210	14.6520	15.0829	15.5138
943	.3426	.7736	.2045	.6355	.0664	.4973	.9283	.3592	.7902	.2211	.6521	.0830	.5139
946	.3427	.7737	.2046	.6355	.0665	.4974	.9284	.3593	.7903	.2212	.6522	.0831	.5141
949	.3428	.7737	.2047	.6356	.0666	.4975	.9285	.3594	.7904	.2213	.6523	.0832	.5142
952	.3428	.7738	.2048	.6357	.0667	.4976	.9286	.3595	.7905	.2214	.6524	.0833	.5143
430955	10.3429	10.7739	11.2048	11.6358	12.0667	12.4977	12.9287	13.3596	13.7906	14.2215	14.6525	15.0834	15.5144
958	.3430	.7740	.2049	.6359	.0668	.4978	.9287	.3597	.7907	.2216	.6526	.0835	.5145
961	.3431	.7740	.2050	.6359	.0669	.4979	.9288	.3598	.7908	.2217	.6527	.0836	.5146
964	.3431	.7741	.2051	.6360	.0670	.4980	.9289	.3599	.7908	.2218	.6528	.0837	.5147
967	.3432	.7742	.2051	.6361	.0671	.4980	.9290	.3600	.7909	.2219	.6529	.0838	.5148
430970	10.3433	10.7743	11.2052	11.6362	12.0672	12.4981	12.9291	13.3601	13.7910	14.2220	14.6530	15.0840	15.5149
973	.3434	.7743	.2053	.6363	.0672	.4982	.9292	.3602	.7911	.2221	.6531	.0841	.5150
976	.3434	.7744	.2054	.6364	.0673	.4983	.9293	.3603	.7912	.2222	.6532	.0842	.5151
979	.3435	.7745	.2055	.6364	.0674	.4984	.9294	.3603	.7913	.2223	.6533	.0843	.5152
982	.3436	.7746	.2055	.6365	.0675	.4985	.9295	.3604	.7914	.2224	.6534	.0844	.5154
430985	10.3436	10.7746	11.2056	11.6366	12.0676	12.4986	12.9296	13.3605	13.7915	14.2225	14.6535	15.0845	15.5155
988	.3437	.7747	.2057	.6367	.0677	.4987	.9296	.3606	.7916	.2226	.6536	.0846	.5156
991	.3438	.7748	.2058	.6368	.0677	.4987	.9297	.3607	.7917	.2227	.6537	.0847	.5157
994	.3439	.7749	.2058	.6368	.0678	.4988	.9298	.3608	.7918	.2228	.6538	.0848	.5158
997	.3439	.7749	.2059	.6369	.0679	.4989	.9299	.3609	.7919	.2229	.6539	.0849	.5159
431000	10.3440	10.7750	11.2060	11.6370	12.0680	12.4990	12.9300	13.3610	13.7920	14.2230	14.6540	15.0850	15.5160

MEGACYCLES PER SECOND

H A R M O N I C S

BASIC FREQ.	37	38	39	40	41	42	43	44	45	46	47	48	50
430700	15.9359	16.3666	16.7973	17.2280	17.6587	18.0894	18.5201	18.9508	19.3815	19.8122	20.2429	20.6736	21.5350
703	.9360	.3667	.7974	.2281	.6588	.0895	.5202	.9509	.3816	.8123	.2430	.6737	.5352
706	.9361	.3668	.7975	.2282	.6589	.0897	.5204	.9511	.3818	.8125	.2432	.6739	.5353
709	.9362	.3669	.7977	.2284	.6591	.0898	.5205	.9512	.3819	.8126	.2433	.6740	.5355
712	.9363	.3671	.7978	.2285	.6592	.0899	.5206	.9513	.3820	.8128	.2435	.6742	.5356
430715	15.9365	16.3672	16.7979	17.2286	17.6593	18.0900	18.5207	18.9515	19.3822	19.8129	20.2536	20.6743	21.5358
718	.9366	.3673	.7980	.2287	.6594	.0902	.5209	.9516	.3823	.8130	.2437	.6745	.5359
721	.9367	.3674	.7981	.2288	.6596	.0903	.5210	.9517	.3824	.8132	.2439	.6746	.5361
724	.9368	.3675	.7982	.2290	.6597	.0904	.5211	.9519	.3826	.8133	.2440	.6748	.5362
727	.9369	.3676	.7984	.2291	.6598	.0905	.5213	.9520	.3827	.8134	.2442	.6749	.5364
430730	15.9370	16.3677	16.7985	17.2292	17.6599	18.0907	18.5214	18.9521	19.3829	19.8136	20.2443	20.6750	21.5365
733	.9371	.3679	.7986	.2293	.6601	.0908	.5215	.9523	.3830	.8137	.2445	.6752	.5367
736	.9372	.3680	.7987	.2294	.6602	.0909	.5216	.9524	.3831	.8139	.2446	.6753	.5368
739	.9373	.3681	.7988	.2296	.6603	.0910	.5218	.9525	.3833	.8140	.2447	.6755	.5370
742	.9375	.3682	.7989	.2297	.6604	.0912	.5219	.9526	.3834	.8141	.2449	.6756	.5371
430745	15.9376	16.3683	16.7991	17.2298	17.6605	18.0913	18.5220	18.9528	19.3835	19.8143	20.2450	20.6758	21.5373
748	.9377	.3684	.7992	.2299	.6607	.0914	.5222	.9529	.3837	.8144	.2452	.6759	.5374
751	.9378	.3685	.7993	.2300	.6608	.0915	.5223	.9530	.3838	.8145	.2453	.6760	.5376
754	.9379	.3687	.7994	.2302	.6609	.0917	.5224	.9532	.3839	.8147	.2454	.6762	.5377
757	.9380	.3688	.7995	.2303	.6610	.0918	.5226	.9533	.3841	.8148	.2456	.6763	.5379
430760	15.9381	16.3689	16.7996	17.2304	17.6612	18.0919	18.5227	18.9534	19.3842	19.8150	20.2457	20.6765	21.5380
763	.9382	.3690	.7998	.2305	.6613	.0920	.5228	.9536	.3843	.8151	.2459	.6766	.5382
766	.9383	.3691	.7999	.2306	.6614	.0922	.5229	.9537	.3845	.8152	.2460	.6768	.5383
769	.9385	.3692	.8000	.2308	.6615	.0923	.5231	.9538	.3846	.8154	.2461	.6769	.5385
772	.9386	.3693	.8001	.2309	.6617	.0924	.5232	.9540	.3847	.8155	.2463	.6771	.5386
430775	15.9387	16.3695	16.8002	17.2310	17.6618	18.0926	18.5233	18.9541	19.3849	19.8157	20.2464	20.6772	21.5388
778	.9388	.3696	.8003	.2311	.6619	.0927	.5235	.9542	.3850	.8158	.2466	.6773	.5389
781	.9389	.3697	.8005	.2312	.6620	.0928	.5236	.9544	.3851	.8159	.2467	.6775	.5391
784	.9390	.3698	.8006	.2314	.6621	.0929	.5237	.9545	.3853	.8161	.2468	.6776	.5392
787	.9391	.3699	.8007	.2315	.6623	.0931	.5238	.9546	.3854	.8162	.2470	.6778	.5394
430790	15.9392	16.3700	16.8008	17.2316	17.6624	18.0932	18.5240	18.9548	19.3856	19.8163	20.2471	20.6779	21.5395
793	.9393	.3701	.8009	.2317	.6625	.0933	.5241	.9549	.3857	.8165	.2473	.6781	.5397
796	.9395	.3702	.8010	.2318	.6626	.0934	.5242	.9550	.3858	.8166	.2474	.6782	.5398
799	.9396	.3704	.8012	.2320	.6628	.0936	.5244	.9552	.3860	.8168	.2476	.6784	.5400
802	.9397	.3705	.8013	.2321	.6629	.0937	.5245	.9553	.3861	.8169	.2477	.6785	.5401
430805	15.9398	16.3706	16.8014	17.2322	17.6630	18.0938	18.5246	18.9554	19.3862	19.8170	20.2478	20.6786	21.5403
808	.9399	.3707	.8015	.2323	.6631	.0939	.5247	.9556	.3864	.8172	.2480	.6788	.5404
811	.9400	.3708	.8016	.2324	.6633	.0941	.5249	.9557	.3865	.8173	.2481	.6789	.5406
814	.9401	.3709	.8017	.2326	.6634	.0942	.5250	.9558	.3866	.8174	.2483	.6791	.5407
817	.9402	.3710	.8019	.2327	.6635	.0943	.5251	.9559	.3868	.8176	.2484	.6792	.5409
430820	15.9403	16.3712	16.8020	17.2328	17.6636	18.0944	18.5253	18.9561	19.3869	19.8177	20.2485	20.6794	21.5410
823	.9405	.3713	.8021	.2329	.6637	.0946	.5254	.9562	.3870	.8179	.2487	.6795	.5412
826	.9406	.3714	.8022	.2330	.6639	.0947	.5255	.9563	.3872	.8180	.2488	.6796	.5413
829	.9407	.3715	.8023	.2332	.6640	.0948	.5256	.9565	.3873	.8181	.2490	.6798	.5415
832	.9408	.3716	.8024	.2333	.6641	.0949	.5258	.9566	.3874	.8183	.2491	.6799	.5416
430835	15.9409	16.3717	16.8026	17.2334	17.6642	18.0951	18.5259	18.9567	19.3876	19.8184	20.2492	20.6801	21.5418
838	.9410	.3718	.8027	.2335	.6644	.0952	.5260	.9569	.3877	.8185	.2494	.6802	.5419
741	.9411	.3720	.8028	.2336	.6645	.0953	.5262	.9570	.3878	.8187	.2495	.6804	.5421
844	.9412	.3721	.8029	.2338	.6646	.0954	.5263	.9571	.3880	.8188	.2497	.6805	.5422
847	.9413	.3722	.8030	.2339	.6647	.0956	.5264	.9573	.3881	.8190	.2498	.6807	.5424
430850	15.9415	16.3723	16.8032	17.2340	17.6649	18.0957	18.5266	18.9574	19.3883	19.8191	20.2500	20.6808	21.5425
853	.9416	.3724	.8033	.2341	.6650	.0958	.5267	.9575	.3884	.8192	.2501	.6809	.5427
856	.9417	.3725	.8034	.2342	.6651	.0960	.5268	.9577	.3885	.8194	.2502	.6811	.5428
859	.9418	.3726	.8035	.2344	.6652	.0961	.5269	.9578	.3887	.8195	.2504	.6812	.5430
862	.9419	.3728	.8036	.2345	.6653	.0962	.5271	.9579	.3888	.8197	.2505	.6814	.5431
430865	15.9420	16.3729	16.8037	17.2346	17.6655	18.0963	18.5272	18.9581	19.3889	19.8198	20.2507	20.6815	21.5433
868	.9421	.3730	.8039	.2347	.6656	.0965	.5273	.9582	.3891	.8199	.2508	.6817	.5434
871	.9422	.3731	.8040	.2348	.6657	.0966	.5275	.9583	.3892	.8201	.2509	.6818	.5436
874	.9423	.3732	.8041	.2350	.6658	.0967	.5276	.9585	.3893	.8202	.2511	.6820	.5437
877	.9424	.3733	.8042	.2351	.6660	.0968	.5277	.9586	.3895	.8203	.2512	.6821	.5439
430880	15.9426	16.3734	16.8043	17.2352	17.6661	18.0970	18.5278	18.9587	19.3896	19.8205	20.2514	20.6822	21.5440
883	.9427	.3736	.8044	.2353	.6662	.0971	.5280	.9589	.3897	.8206	.2515	.6824	.5442
886	.9428	.3737	.8046	.2354	.6663	.0972	.5281	.9590	.3899	.8208	.2516	.6825	.5443
889	.9429	.3738	.8047	.2356	.6664	.0973	.5282	.9591	.3900	.8209	.2518	.6827	.5445
892	.9430	.3739	.8048	.2357	.6666	.0975	.5284	.9592	.3901	.8210	.2519	.6828	.5446
430895	15.9431	16.3740	16.8049	17.2358	17.6667	18.0976	18.5285	18.9594	19.3903	19.8212	20.2521	20.6830	21.5448
898	.9432	.3741	.8050	.2359	.6668	.0977	.5286	.9595	.3904	.8213	.2522	.6831	.5449
901	.9433	.3742	.8051	.2360	.6669	.0978	.5287	.9596	.3905	.8214	.2523	.6832	.5451
904	.9434	.3744	.8053	.2362	.6671	.0980	.5289	.9598	.3907	.8216	.2525	.6834	.5452
907	.9436	.3745	.8054	.2363	.6672	.0981	.5290	.9599	.3908	.8217	.2526	.6835	.5454
430910	15.9437	16.3746	16.8055	17.2364	17.6673	18.0982	18.5291	18.9600	19.3910	19.8219	20.2528	20.6837	21.5455
913	.9438	.3747	.8056	.2365	.6674	.0983	.5293	.9602	.3911	.8220	.2529	.6838	.5457
916	.9439	.3748	.8057	.2366	.6676	.0985	.5294	.9603	.3912	.8221	.2531	.6840	.5458
919	.9440	.3749	.8058	.2368	.6677	.0986	.5295	.9604	.3914	.8223	.2532	.6841	.5460
922	.9441	.3750	.8060	.2369	.6678	.0987	.5296	.9606	.3915	.8224	.2533	.6843	.5461
430925	15.9442	16.3752	16.8061	17.2370	17.6679	18.0989	18.5298	18.9607	19.3916	19.8226	20.2535	20.6844	21.5463
928	.9443	.3753	.8062	.2371	.6680	.0990	.5299	.9608	.3918	.8227	.2536	.6845	.5464
931	.9444	.3754	.8063	.2372	.6682	.0991	.5300	.9610	.3919	.8228	.2538	.6847	.5466
934	.9446	.3755	.8064	.2374	.6683	.0992	.5302	.9611	.3920	.8230	.2539	.6848	.5467
937	.9447	.3756	.8065	.2375	.6684	.0994	.5303	.9612	.3922	.8231	.2540	.6850	.5469
430940	15.9448	16:3757	16.8067	17.2376	17.6685	18.0995	18.5304	18.9614	19.3923	19.8232	20.2542	20.6851	21.5470
943	.9449	.3758	.8068	.2377	.6687	.0996	.5305	.9615	.3924	.8234	.2543	.6853	.5472
946	.9450	.3759	.8069	.2378	.6688	.0997	.5307	.9616	.3926	.8235	.2545	.6854	.5473
949	.9451	.3761	.8070	.2380	.6689	.0999	.5308	.9618	.3927	.8237	.2546	.6856	.5475
952	.9452	.3762	.8071	.2381	.6690	.1000	.5309	.9619	.3928	.8238	.2547	.6857	.5476
430955	15.9453	16:3763	16.8072	17.2382	17.6692	18.1001	18.5311	18.9620	19.3930	19.8239	20.2549	20.6858	21.5478
958	.9454	.3764	.8074	.2383	.6693	.1002	.5312	.9622	.3931	.8241	.2550	.6860	.5479
961	.9456	.3765	.8075	.2384	.6694	.1004	.5313	.9623	.3932	.8242	.2552	.6861	.5481
964	.9457	.3766	.8076	.2386	.6695	.1005	.5315	.9624	.3934	.8243	.2553	.6863	.5482
967	.9458	.3767	.8077	.2387	.6696	.1006	.5316	.9625	.3935	.8245	.2554	.6864	.5484
430970	15.9459	16.3769	16.8078	17.2388	17.6698	18.1007	18.5317	18.9627	19.3937	19.8246	20.2556	20.6866	21.5485
973	.9460	.3770	.8079	.2389	.6699	.1009	.5318	.9628	.3938	.8248	.2557	.6867	.5487
976	.9461	.3771	.8081	.2390	.6700	.1010	.5320	.9629	.3939	.8249	.2559	.6868	.5488
979	.9462	.3772	.8082	.2392	.6701	.1011	.5321	.9631	.3941	.8250	.2560	.6870	.5490
982	.9463	.3773	.8083	.2393	.6703	.1012	.5322	.9632	.3942	.8252	.2562	.6871	.5491
430985	15.9464	16.3774	16.8084	17.2394	17.6704	18.1014	18.5324	18.9633	19.3943	19.8253	20.2563	20.6873	21.5493
988	.9466	.3775	.8085	.2395	.6705	.1015	.5325	.9635	.3945	.8254	.2564	.6874	.5494
991	.9467	.3777	.8086	.2396	.6706	.1016	.5326	.9636	.3946	.8256	.2566	.6876	.5496
994	.9468	.3778	.8088	.2398	.6708	.1017	.5327	.9637	.3947	.8257	.2567	.6877	.5497
997	.9469	.3779	.8089	.2399	.6709	.1019	.5329	.9639	.3949	.8259	.2569	.6879	.5499
431000	15.9470	16.3780	16.8090	17.2400	17.6710	18.1020	18.5330	18.9640	19.3950	19.8260	20.2570	20.6880	21.5500

MEGACYCLES PER SECOND

H A R M O N I C S

BASIC FREQ.	24	25	26	27	28	29	30	31	32	33	34	35	36
431000	10.3440	10.7750	11.2060	11.6370	12.0680	12.4990	12.9300	13.3610	13.7920	14.2230	14.6540	15.0850	15.5160
003	.3441	.7751	.2061	.6371	.0681	.4991	.9301	.3611	.7921	.2231	.6541	.0851	.5161
006	.3441	.7752	.2062	.6372	.0682	.4992	.9302	.3612	.7922	.2232	.6542	.0852	.5162
009	.3442	.7752	.2062	.6372	.0683	.4993	.9303	.3613	.7923	.2233	.6543	.0853	.5163
012	.3443	.7753	.2063	.6373	.0683	.4993	.9304	.3614	.7924	.2234	.6544	.0854	.5164
431015	10.3444	10.7754	11.2064	11.6374	12.0684	12.4994	12.9305	13.3615	13.7925	14.2235	14.6545	15.0855	15.5165
018	.3444	.7755	.2065	.6375	.0685	.4995	.9305	.3616	.7926	.2236	.6546	.0856	.5166
021	.3445	.7755	.2065	.6376	.0686	.4996	.9306	.3617	.7927	.2237	.6547	.0857	.5168
024	.3446	.7756	.2066	.6376	.0687	.4997	.9307	.3617	.7928	.2238	.6548	.0858	.5169
027	.3446	.7757	.2067	.6377	.0688	.4998	.9308	.3618	.7929	.2239	.6549	.0859	.5170
431030	10.3447	10.7758	11.2068	11.6378	12.0688	12.4999	12.9309	13.3619	13.7930	14.2240	14.6550	15.0861	15.5171
033	.3448	.7758	.2069	.6379	.0689	.5000	.9310	.3620	.7931	.2241	.6551	.0862	.5172
036	.3449	.7759	.2069	.6380	.0690	.5000	.9311	.3621	.7932	.2242	.6552	.0863	.5173
039	.3449	.7760	.2070	.6381	.0691	.5001	.9312	.3622	.7932	.2243	.6553	.0864	.5174
042	.3450	.7761	.2071	.6281	.0692	.5002	.9313	.3623	.7933	.2244	.6554	.0865	.5175
431045	10.3451	10.7761	11.2072	11.6382	12.0693	12.5003	12.9314	13.3624	13.7934	14.2245	14.6555	15.0866	15.5176
048	.3452	.7762	.2072	.6383	.0693	.5004	.9314	.3625	.7935	.2246	.6556	.0867	.5177
051	.3452	.7763	.2073	.6384	.0694	.5005	.9315	.3626	.7936	.2247	.6557	.0868	.5178
054	.3453	.7764	.2074	.6385	.0695	.5006	.9316	.3627	.7937	.2248	.6558	.0869	.5179
057	.3454	.7764	.2075	.6385	.0696	.5007	.9317	.3628	.7938	.2249	.6559	.0870	.5181
431060	10.3454	10.7765	11.2076	11.6386	12.0697	12.5007	12.9318	13.3629	13.7939	14.2250	14.6560	15.0871	15.5182
063	.3455	.7766	.2076	.6387	.0698	.5008	.9319	.3630	.7940	.2251	.6561	.0872	.5183
066	.3456	.7767	.2077	.6388	.0698	.5009	.9320	.3630	.7941	.2252	.6562	.0873	.5184
069	.3457	.7767	.2078	.6389	.0699	.5010	.9321	.3631	.7942	.2253	.6563	.0874	.5185
072	.3457	.7768	.2079	.6389	.0700	.5011	.9322	.3632	.7943	.2254	.6564	.0875	.5186
431075	10.3458	10.7769	11.2080	11.6390	12.0701	12.5012	12.9323	13.3633	13.7944	14.2255	14.6566	15.0876	15.5187
078	.3459	.7770	.2080	.6391	.0702	.5013	.9323	.3634	.7945	.2256	.6567	.0877	.5188
081	.3459	.7770	.2081	.6392	.0703	.5013	.9324	.3635	.7946	.2257	.6568	.0878	.5189
084	.3460	.7771	.2082	.6393	.0704	.5014	.9325	.3636	.7947	.2258	.6569	.0879	.5190
087	.3461	.7772	.2083	.6393	.0704	.5015	.9326	.3637	.7948	.2259	.6570	.0880	.5191
431090	10.3462	10.7773	11.2083	11.6394	12.0705	12.5016	12.9327	13.3638	13.7949	14.2260	14.6571	15.0882	15.5192
093	.3462	.7773	.2084	.6395	.0706	.5017	.9328	.3639	.7950	.2261	.6572	.0883	.5193
096	.3463	.7774	.2085	.6396	.0707	.5018	.9329	.3640	.7951	.2262	.6573	.0884	.5195
099	.3464	.7775	.2086	.6397	.0708	.5019	.9330	.3641	.7952	.2263	.6574	.0885	.5196
102	.3464	.7776	.2087	.6398	.0709	.5020	.9331	.3642	.7953	.2264	.6575	.0886	.5197
431105	10.3465	10.7776	11.2087	11.6398	12.0709	12.5020	12.9332	13.3643	13.7954	14.2265	14.6576	15.0887	15.5198
108	.3466	.7777	.2088	.6399	.0710	.5021	.9332	.3643	.7955	.2266	.6577	.0888	.5199
111	.3467	.7778	.2089	.6400	.0711	.5022	.9333	.3644	.7956	.2267	.6578	.0889	.5200
114	.3467	.7779	.2090	.6401	.0712	.5023	.9334	.3645	.7956	.2268	.6579	.0890	.5201
117	.3468	.7779	.2090	.6402	.0713	.5024	.9335	.3646	.7957	.2269	.6580	.0891	.5202
431120	10.3469	10.7780	11.2091	11.6402	12.0714	12.5025	12.9336	13.3647	13.7958	14.2270	14.6581	15.0892	15.5203
123	.3470	.7781	.2092	.6403	.0714	.5026	.9337	.3648	.7959	.2271	.6582	.0893	.5204
126	.3470	.7782	.2093	.6404	.0715	.5027	.9338	.3649	.7960	.2272	.6583	.0894	.5205
129	.3471	.7782	.2094	.6405	.0716	.5027	.9339	.3650	.7961	.2273	.6584	.0895	.5206
132	.3472	.7783	.2094	.6406	.0717	.5028	.9340	.3651	.7962	.2274	.6585	.0896	.5208
431135	10.3472	10.7784	11.2095	11.6406	12.0718	12.5029	12.9341	13.3652	13.7963	14.2275	14.6586	15.0897	15.5209
138	.3473	.7785	.2096	.6407	.0719	.5030	.9341	.3653	.7964	.2276	.6587	.0898	.5210
141	.3474	.7785	.2097	.6408	.0719	.5031	.9342	.3654	.7965	.2277	.6588	.0899	.5211
144	.3475	.7786	.2097	.6409	.0720	.5032	.9343	.3655	.7966	.2278	.6589	.0900	.5212
147	.3475	.7787	.2098	.6410	.0721	.5033	.9344	.3656	.7967	.2279	.6590	.0901	.5213
431150	10.3476	10.7788	11.2099	11.6411	12.0722	12.5034	12.9345	13.3657	13.7968	14.2280	14.6591	15.0903	15.5214
153	.3477	.7788	.2100	.6411	.0723	.5034	.9346	.3657	.7969	.2280	.6592	.0904	.5215
156	.3477	.7789	.2101	.6412	.0724	.5035	.9347	.3658	.7970	.2281	.6593	.0905	.5216
159	.3478	.7790	.2101	.6413	.0725	.5036	.9348	.3659	.7971	.2282	.6594	.0906	.5217
162	.3479	.7791	.2102	.6414	.0725	.5037	.9349	.3660	.7972	.2283	.6595	.0907	.5218
431165	10.3480	10.7791	11.2103	11.6415	12.0726	12.5038	12.9350	13.3661	13.7973	14.2284	14.6596	15.0908	15.5219
168	.3480	.7792	.2104	.6415	.0727	.5039	.9350	.3662	.7974	.2285	.6597	.0909	.5220
171	.3481	.7793	.2104	.6416	.0728	.5040	.9351	.3663	.7975	.2286	.6598	.0910	.5222
174	.3482	.7794	.2105	.6417	.0729	.5040	.9352	.3664	.7976	.2287	.6599	.0911	.5223
177	.3482	.7794	.2106	.6418	.0730	.5041	.9353	.3665	.7977	.2288	.6600	.0912	.5224
431180	10.3483	10.7795	11.2107	11.6419	12.0730	12.5042	12.9354	13.3666	13.7978	14.2289	14.6601	15.0913	15.5225
183	.3484	.7796	.2108	.6419	.0731	.5043	.9355	.3667	.7979	.2290	.6602	.0914	.5226
186	.3485	.7797	.2108	.6420	.0732	.5044	.9356	.3668	.7980	.2291	.6603	.0915	.5227
189	.3485	.7797	.2109	.6421	.0733	.5045	.9357	.3669	.7980	.2292	.6604	.0916	.5228
192	.3486	.7798	.2110	.6422	.0734	.5046	.9358	.3670	.7981	.2293	.6605	.0917	.5229
431195	10.3487	10.7799	11.2111	11.6423	12.0735	12.5047	12.9359	13.3670	13.7982	14.2294	14.6606	15.0918	15.5230
198	.3488	.7800	.2111	.6423	.0735	.5047	.9359	.3671	.7983	.2295	.6607	.0919	.5231
201	.3488	.7800	.2112	.6424	.0736	.5048	.9360	.3672	.7984	.2296	.6608	.0920	.5232
204	.3489	.7801	.2113	.6425	.0737	.5049	.9361	.3673	.7985	.2297	.6609	.0921	.5233
207	.3490	.7802	.2114	.6426	.0738	.5050	.9362	.3674	.7986	.2298	.6610	.0922	.5235
431210	10.3490	10.7803	11.2115	11.6427	12.0739	12.5051	12.9363	13.3675	13.7987	14.2299	14.6611	15.0924	15.5236
213	.3491	.7803	.2115	.6428	.0740	.5052	.9364	.3676	.7988	.2300	.6612	.0925	.5237
216	.3492	.7804	.2116	.6428	.0740	.5053	.9365	.3677	.7989	.2301	.6613	.0926	.5238
219	.3493	.7805	.2117	.6429	.0741	.5054	.9366	.3678	.7990	.2302	.6614	.0927	.5239
222	.3493	.7806	.2118	.6430	.0742	.5054	.9367	.3679	.7991	.2303	.6615	.0928	.5240
431225	10.3494	10.7806	11.2119	11.6431	12.0743	12.5055	12.9368	13.3680	13.7992	14.2304	14.6617	15.0929	15.5241
228	.3495	.7807	.2119	.6432	.0744	.5056	.9368	.3681	.7993	.2305	.6618	.0930	.5242
231	.3495	.7808	.2120	.6432	.0745	.5057	.9369	.3682	.7994	.2306	.6619	.0931	.5243
234	.3496	.7809	.2121	.6433	.0746	.5058	.9370	.3683	.7995	.2307	.6620	.0932	.5244
237	.3497	.7809	.2122	.6434	.0746	.5059	.9371	.3683	.7996	.2308	.6621	.0933	.5245
431240	10.3498	10.7810	11.2122	11.6435	12.0747	12.5060	12.9372	13.3684	13.7997	14.2309	14.6622	15.0934	15.5246
243	.3498	.7811	.2123	.6436	.0748	.5060	.9373	.3685	.7998	.2310	.6623	.0935	.5247
246	.3499	.7812	.2124	.6436	.0749	.5061	.9374	.3686	.7999	.2311	.6624	.0936	.5249
249	.3500	.7812	.2125	.6437	.0750	.5062	.9375	.3687	.8000	.2312	.6625	.0937	.5250
252	.3500	.7813	.2126	.6438	.0751	.5063	.9376	.3688	.8001	.2313	.6626	.0938	.5251
431255	10.3501	10.7814	11.2126	11.6439	12.0751	12.5064	12.9377	13.3689	13.8002	14.2314	14.6627	15.0939	15.5252
258	.3502	.7815	.2127	.6440	.0752	.5065	.9377	.3690	.8003	.2315	.6628	.0940	.5253
261	.3503	.7815	.2128	.6440	.0753	.5066	.9378	.3691	.8004	.2316	.6629	.0941	.5254
264	.3503	.7816	.2129	.6441	.0754	.5067	.9379	.3692	.8004	.2317	.6630	.0942	.5255
267	.3504	.7817	.2129	.6442	.0755	.5067	.9380	.3693	.8005	.2318	.6631	.0943	.5256
431270	10.3505	10.7818	11.2130	11.6443	12.0756	12.5068	12.9381	13.3694	13.8006	14.2319	14.6632	15.0945	15.5257
273	.3506	.7818	.2131	.6444	.0756	.5069	.9382	.3695	.8007	.2320	.6633	.0946	.5258
276	.3506	.7819	.2132	.6445	.0757	.5070	.9383	.3696	.8008	.2321	.6634	.0947	.5259
279	.3507	.7820	.2133	.6445	.0758	.5071	.9384	.3696	.8009	.2322	.6635	.0948	.5260
282	.3508	.7821	.2133	.6446	.0759	.5072	.9385	.3697	.8010	.2323	.6636	.0949	.5262
431285	10.3508	10.7821	11.2134	11.6447	12.0760	12.5073	12.9386	13.3698	13.8011	14.2324	14.6637	15.0950	15.5263
288	.3509	.7822	.2135	.6448	.0761	.5074	.9386	.3699	.8012	.2325	.6638	.0951	.5264
291	.3510	.7823	.2136	.6449	.0761	.5074	.9387	.3700	.8013	.2326	.6639	.0952	.5265
294	.3511	.7824	.2136	.6449	.0762	.5075	.9388	.3701	.8014	.2327	.6640	.0953	.5266
297	.3511	.7824	.2137	.6450	.0763	.5076	.9389	.3702	.8015	.2328	.6641	.0954	.5267
431300	10.3512	10.7825	11.2138	11.6451	12.0764	12.5077	12.9390	13.3703	13.8016	14.2329	14.6642	15.0955	15.5268

MEGACYCLES PER SECOND

H A R M O N I C S

BASIC FREQ.	37	38	39	40	41	42	43	44	45	46	47	48	50
431000	15.9470	16.3780	16.8090	17.2400	17.6710	18.1020	18.5330	18.9640	19.3950	19.8260	20.2570	20.6880	21.5500
003	.9471	.3781	.8091	.2401	.6711	.1021	.5331	.9641	.3951	.8261	.2571	.6881	.5502
006	.9472	.3782	.8092	.2402	.6712	.1023	.5333	.9643	.3953	.8263	.2573	.6883	.5503
009	.9473	.3783	.8094	.2404	.6714	.1024	.5334	.9644	.3954	.8264	.2574	.6884	.5505
012	.9474	.3785	.8095	.2405	.6715	.1025	.5335	.9645	.3955	.8266	.2576	.6886	.5506
431015	15.9476	16.3786	16.8096	17.2406	17.6716	18.1026	18.5336	18.9647	19.3957	19.8267	20.2577	20.6887	21.5508
018	.9477	.3787	.8097	.2407	.6717	.1028	.5338	.9648	.3958	.8268	.2578	.6889	.5509
021	.9478	.3788	.8098	.2408	.6719	.1029	.5339	.9649	.3959	.8270	.2580	.6890	.5511
024	.9479	.3789	.8099	.2410	.6720	.1030	.5340	.9651	.3961	.8271	.2581	.6892	.5512
027	.9480	.3790	.8101	.2411	.6721	.1031	.5342	.9652	.3962	.8272	.2583	.6893	.5514
431030	15.9481	16.3791	16.8102	17.2412	17.6722	18.1033	18.5343	18.9653	19.3964	19.8274	20.2584	20.6894	21.5515
033	.9482	.3793	.8103	.2413	.6724	.1034	.5344	.9655	.3965	.8275	.2586	.6896	.5517
036	.9483	.3794	.8104	.2414	.6725	.1035	.5345	.9656	.3966	.8277	.2587	.6897	.5518
039	.9484	.3795	.8105	.2416	.6726	.1036	.5347	.9657	.3968	.8278	.2588	.6899	.5520
042	.9486	.3796	.8106	.2417	.6727	.1038	.5348	.9658	.3969	.8279	.2590	.6900	.5521
431045	15.9487	16.3797	16.8108	17.2418	17.6728	18.1039	18.5349	18.9660	19.3970	19.8281	20.2591	20.6902	21.5523
048	.9488	.3798	.8109	.2419	.6730	.1040	.5351	.9661	.3972	.8282	.2593	.6903	.5524
051	.9489	.3799	.8110	.2420	.6731	.1041	.5352	.9662	.3973	.8283	.2594	.6904	.5526
054	.9490	.3801	.8111	.2422	.6732	.1043	.5353	.9664	.3974	.8285	.2595	.6906	.5527
057	.9491	.3802	.8112	.2423	.6733	.1044	.5355	.9665	.3976	.8286	.2597	.6907	.5529
431060	15.9492	16.3803	16.8113	17.2424	17.6735	18.1045	18.5356	18.9666	19.3977	19.8288	20.2598	20.6909	21.5530
063	.9493	.3804	.8115	.2425	.6736	.1046	.5357	.9668	.3978	.8289	.2600	.6910	.5532
066	.9494	.3805	.8116	.2426	.6737	.1048	.5358	.9669	.3980	.8290	.2601	.6912	.5533
069	.9496	.3806	.8117	.2428	.6738	.1049	.5360	.9670	.3981	.8292	.2602	.6913	.5535
072	.9497	.3807	.8118	.2429	.6740	.1050	.5361	.9672	.3982	.8293	.2604	.6915	.5536
431075	15.9498	16.3809	16.8119	17.2430	17.6741	18.1052	18.5362	18.9673	19.3984	19.8295	20.2605	20.6916	21.5538
078	.9499	.3810	.8120	.2431	.6742	.1053	.5364	.9674	.3985	.8296	.2607	.6917	.5539
081	.9500	.3811	.8122	.2432	.6743	.1054	.5365	.9676	.3986	.8297	.2608	.6919	.5541
084	.9501	.3812	.8123	.2434	.6744	.1055	.5366	.9677	.3988	.8299	.2609	.6920	.5542
087	.9502	.3813	.8124	.2435	.6746	.1057	.5367	.9678	.3989	.8300	.2611	.6922	.5544
431090	15.9503	16.3814	16.8125	17.2436	17.6747	18.1058	18.5369	18.9680	19.3991	19.8301	20.2612	20.6923	21.5545
093	.9504	.3815	.8126	.2437	.6748	.1059	.5370	.9681	.3992	.8303	.2614	.6925	.5547
096	.9506	.3816	.8127	.2438	.6749	.1060	.5371	.9682	.3993	.8304	.2615	.6926	.5548
099	.9507	.3818	.8129	.2440	.6751	.1062	.5373	.9684	.3995	.8306	.2617	.6928	.5550
102	.9508	.3819	.8130	.2441	.6752	.1063	.5374	.9685	.3996	.8307	.2618	.6929	.5551
431105	15.9509	16.3820	16.8131	17.2442	17.6753	18.1064	18.5375	18.9686	19.3997	19.8308	20.2619	20.6930	21.5553
108	.9510	.3821	.8132	.2443	.6754	.1065	.5376	.9688	.3999	.8310	.2621	.6932	.5554
111	.9511	.3822	.8133	.2444	.6756	.1067	.5378	.9689	.4000	.8311	.2622	.6933	.5556
114	.9512	.3823	.8134	.2446	.6757	.1068	.5379	.9690	.4001	.8312	.2624	.6935	.5557
117	.9513	.3824	.8136	.2447	.6758	.1069	.5380	.9691	.4003	.8314	.2625	.6936	.5559
431120	15.9514	16.3826	16.8137	17.2448	17.6759	18.1070	18.5382	18.9693	19.4004	19.8315	20.2626	20.6938	21.5560
123	.9516	.3827	.8138	.2449	.6760	.1072	.5383	.9694	.4005	.8317	.2628	.6939	.5562
126	.9517	.3828	.8139	.2450	.6762	.1073	.5384	.9695	.4007	.8318	.2629	.6940	.5563
129	.9518	.3829	.8140	.2452	.6763	.1074	.5385	.9697	.4008	.8319	.2631	.6942	.5565
132	.9519	.3830	.8141	.2453	.6764	.1075	.5387	.9698	.4009	.8321	.2632	.6943	.5566
431135	15.9520	16.3831	16.8143	17.2454	17.6765	18.1077	18.5388	18.9699	19.4011	19.8322	20.2633	20.6945	21.5568
138	.9521	.3832	.8144	.2455	.6767	.1078	.5389	.9701	.4012	.8323	.2635	.6946	.5569
141	.9522	.3834	.8145	.2456	.6768	.1079	.5391	.9702	.4013	.8325	.2636	.6948	.5571
144	.9523	.3835	.8146	.2458	.6769	.1080	.5392	.9703	.4015	.8326	.2638	.6949	.5572
147	.9524	.3836	.8147	.2459	.6770	.1082	.5393	.9705	.4016	.8328	.2639	.6951	.5574
431150	15.9526	16.3837	16.8149	17.2460	17.6772	18.1083	18.5395	18.9706	19.4018	19.8329	20.2641	20.6952	21.5575
153	.9527	.3838	.8150	.2461	.6773	.1084	.5396	.9707	.4019	.8330	.2642	.6953	.5577
156	.9528	.3839	.8151	.2462	.6774	.1086	.5397	.9709	.4020	.8332	.2643	.6955	.5578
159	.9529	.3840	.8152	.2464	.6775	.1087	.5398	.9710	.4022	.8333	.2645	.6956	.5580
162	.9530	.3842	.8153	.2465	.6776	.1088	.5400	.9711	.4023	.8335	.2646	.6958	.5581
431165	15.9531	16.3843	16.8154	17.2466	17.6778	18.1089	18.5401	18.9713	19.4024	19.8336	20.2648	20.6959	21.5583
168	.9532	.3844	.8156	.2467	.6779	.1091	.5402	.9714	.4026	.8337	.2649	.6961	.5584
171	.9533	.3845	.8157	.2468	.6780	.1092	.5404	.9715	.4027	.8339	.2650	.6962	.5586
174	.9534	.3846	.8158	.2470	.6781	.1093	.5405	.9717	.4028	.8340	.2652	.6964	.5587
177	.9535	.3847	.8159	.2471	.6783	.1094	.5406	.9718	.4030	.8341	.2653	.6965	.5589
431180	15.9537	16.3848	16.8160	17.2472	17.6784	18.1096	18.5407	18.9719	19.4031	19.8343	20.2655	20.6966	21.5590
183	.9538	.3850	.8161	.2473	.6785	.1097	.5409	.9721	.4032	.8344	.2656	.6968	.5592
186	.9539	.3851	.8163	.2474	.6786	.1098	.5410	.9722	.4034	.8346	.2657	.6969	.5593
189	.9540	.3852	.8164	.2476	.6787	.1099	.5411	.9723	.4035	.8347	.2659	.6971	.5595
192	.9541	.3853	.8165	.2477	.6789	.1101	.5413	.9724	.4036	.8348	.2660	.6972	.5596
431195	15.9542	16.3854	16.8166	17.2478	17.6790	18.1102	18.5414	18.9726	19.4038	19.8350	20.2662	20.6974	21.5598
198	.9543	.3855	.8167	.2479	.6791	.1103	.5415	.9727	.4039	.8351	.2663	.6975	.5599
201	.9544	.3856	.8168	.2480	.6792	.1104	.5416	.9728	.4040	.8352	.2664	.6976	.5601
204	.9545	.3858	.8170	.2482	.6794	.1106	.5418	.9730	.4042	.8354	.2666	.6978	.5602
207	.9547	.3859	.8171	.2483	.6795	.1107	.5419	.9731	.4043	.8355	.2667	.6979	.5604
431210	15.9548	16.3860	16.8172	17.2484	17.6796	18.1108	18.5420	18.9732	19.4045	19.8357	20.2669	20.6981	21.5605
213	.9549	.3861	.8173	.2485	.6797	.1109	.5422	.9734	.4046	.8358	.2670	.6982	.5607
216	.9550	.3862	.8174	.2486	.6799	.1111	.5423	.9735	.4047	.8359	.2672	.6984	.5608
219	.9551	.3863	.8175	.2488	.6800	.1112	.5424	.9736	.4049	.8361	.2673	.6985	.5610
222	.9552	.3864	.8177	.2489	.6801	.1113	.5425	.9738	.4050	.8362	.2674	.6987	.5611
431225	15.9553	16.3866	16.8178	17.2490	17.6802	18.1115	18.5427	18.9739	19.4051	19.8364	20.2676	20.6988	21.5613
228	.9554	.3867	.8179	.2491	.6803	.1116	.5428	.9740	.4053	.8365	.2677	.6989	.5614
231	.9555	.3868	.8180	.2492	.6805	.1117	.5429	.9742	.4054	.8366	.2679	.6991	.5616
234	.9557	.3869	.8181	.2494	.6806	.1118	.5431	.9743	.4055	.8368	.2680	.6992	.5617
237	.9558	.3870	.8182	.2495	.6807	.1120	.5432	.9744	.4057	.8369	.2681	.6994	.5619
431240	15.9559	16.3871	16.8184	17.2496	17.6808	18.1121	18.5433	18.9746	19.4058	19.8370	20.2683	20.6995	21.5620
243	.9560	.3872	.8185	.2497	.6810	.1122	.5434	.9747	.4059	.8372	.2684	.6997	.5622
246	.9561	.3873	.8186	.2498	.6811	.1123	.5436	.9748	.4061	.8373	.2686	.6998	.5623
249	.9562	.3875	.8187	.2500	.6812	.1125	.5437	.9750	.4062	.8375	.2687	.7000	.5625
252	.9563	.3876	.8188	.2501	.6813	.1126	.5438	.9751	.4063	.8376	.2688	.7001	.5626
431255	15.9564	16.3877	16.8189	17.2502	17.6815	18.1127	18.5440	18.9752	19.4065	19.8377	20.2690	20.7002	21.5628
258	.9565	.3878	.8191	.2503	.6816	.1128	.5441	.9754	.4066	.8379	.2691	.7004	.5629
261	.9567	.3879	.8192	.2504	.6817	.1130	.5442	.9755	.4067	.8380	.2693	.7005	.5631
264	.9568	.3880	.8193	.2506	.6818	.1131	.5444	.9756	.4069	.8381	.2694	.7007	.5632
267	.9569	.3881	.8194	.2507	.6819	.1132	.5445	.9757	.4070	.8383	.2695	.7008	.5634
431270	15.9570	16.3883	16.8195	17.2508	17.6821	18.1133	18.5446	18.9759	19.4072	19.8384	20.2697	20.7010	21.5635
273	.9571	.3884	.8196	.2509	.6822	.1135	.5447	.9760	.4073	.8386	.2698	.7011	.5637
276	.9572	.3885	.8198	.2510	.6823	.1136	.5449	.9761	.4074	.8387	.2700	.7012	.5638
279	.9573	.3886	.8199	.2512	.6824	.1137	.5450	.9763	.4076	.8388	.2701	.7014	.5640
282	.9574	.3887	.8200	.2513	.6826	.1138	.5451	.9764	.4077	.8390	.2703	.7015	.5641
431285	15.9575	16.3888	16.8201	17.2514	17.6827	18.1140	18.5453	18.9765	19.4078	19.8391	20.2704	20.7017	21.5643
288	.9577	.3889	.8202	.2515	.6828	.1141	.5454	.9767	.4080	.8392	.2705	.7018	.5644
291	.9578	.3891	.8203	.2516	.6829	.1142	.5455	.9768	.4081	.8394	.2707	.7020	.5646
294	.9579	.3892	.8205	.2518	.6831	.1143	.5456	.9769	.4082	.8395	.2708	.7021	.5647
297	.9580	.3893	.8206	.2519	.6832	.1145	.5458	.9771	.4084	.8397	.2710	.7023	.5649
431300	15.9581	16.3894	16.8207	17.2520	17.6833	18.1146	18.5459	18.9772	19.4085	19.8398	20.2711	20.7024	21.5650

R

MEGACYCLES PER SECOND

H A R M O N I C S

BASIC FREQ.	24	25	26	27	28	29	30	31	32	33	34	35	36
431300	10.3512	10.7825	11.2138	11.6451	12.0764	12.5077	12.9390	13.3703	13.8016	14.2329	14.6642	15.0955	15.5268
303	.3513	.7826	.2139	.6452	.0765	.5078	.9391	.3704	.8017	.2330	.6643	.0956	.5269
306	.3513	.7827	.2140	.6453	.0766	.5079	.9392	.3705	.8018	.2331	.6644	.0957	.5270
309	.3514	.7827	.2140	.6453	.0767	.5080	.9393	.3706	.8019	.2332	.6645	.0958	.5271
312	.3515	.7828	.2141	.6454	.0767	.5080	.9394	.3707	.8020	.2333	.6646	.0959	.5272
431315	10.3516	10.7829	11.2142	11.6455	12.0768	12.5081	12.9395	13.3708	13.8021	14.2334	14.6647	15.0960	15.5273
318	.3516	.7830	.2143	.6456	.0769	.5082	.9395	.3709	.8022	.2335	.6648	.0961	.5274
321	.3517	.7830	.2143	.6457	.0770	.5083	.9396	.3710	.8023	.2336	.6649	.0962	.5276
324	.3518	.7831	.2144	.6457	.0771	.5084	.9397	.3710	.8024	.2337	.6650	.0863	.5277
327	.3518	.7832	.2145	.6458	.0772	.5085	.9398	.3711	.8025	.2338	.6651	.0964	.5278
431330	10.3519	10.7833	11.2146	11.6459	12.0772	12.5086	12.9399	13.3712	13.8026	14.2339	14.6652	15.0966	15.5279
333	.3520	.7833	.2147	.6460	.0773	.5087	.9400	.3713	.8027	.2340	.6653	.0967	.5280
336	.3521	.7834	.2147	.6461	.0774	.5087	.9401	.3714	.8028	.2341	.6654	.0968	.5281
339	.3521	.7835	.2148	.6462	.0775	.5088	.9402	.3715	.8028	.2342	.6655	.0969	.5282
342	.3522	.7836	.2149	.6462	.0776	.5089	.9403	.3716	.8029	.2343	.6656	.0970	.5283
431345	10.3523	10.7836	11.2150	11.6463	12.0777	12.5090	12.9404	13.3717	13.8030	14.2344	14.6657	15.0971	15.5284
348	.3524	.7837	.2150	.6464	.0777	.5091	.9404	.3718	.8031	.2345	.6658	.0972	.5285
351	.3524	.7838	.2151	.6465	.0778	.5092	.9405	.3719	.8032	.2346	.6659	.0973	.5286
354	.3525	.7839	.2152	.6466	.0779	.5093	.9406	.3720	.8033	.2347	.6660	.0974	.5287
357	.3526	.7839	.2153	.6466	.0780	.5094	.9407	.3721	.8034	.2348	.6661	.0975	.5289
431360	10.3526	10.7840	11.2154	11.6467	12.0781	12.5094	12.9408	13.3722	13.8035	14.2349	14.6662	15.0976	15.5290
363	.3527	.7841	.2154	.6468	.0782	.5095	.9409	.3723	.8036	.2350	.6663	.0977	.5291
366	.3528	.7842	.2155	.6469	.0782	.5096	.9410	.3723	.8037	.2351	.6664	.0978	.5292
369	.3529	.7842	.2156	.6470	.0783	.5097	.9411	.3724	.8038	.2352	.6665	.0979	.5293
372	.3529	.7843	.2157	.6470	.0784	.5098	.9412	.3725	.8039	.2353	.6666	.0980	.5294
431375	10.3530	10.7844	11.2158	11.6471	12.0785	12.5099	12.9413	13.3726	13.8040	14.2354	14.6668	15.0981	15.5295
378	.3531	.7845	.2158	.6472	.0786	.5100	.9413	.3727	.8041	.2355	.6669	.0982	.5296
381	.3531	.7845	.2159	.6473	.0787	.5100	.9414	.3728	.8042	.2356	.6670	.0983	.5297
384	.3532	.7846	.2160	.6474	.0788	.5101	.9415	.3729	.8043	.2357	.6671	.0984	.5298
387	.3533	.7847	.2161	.6474	.0788	.5102	.9416	.3730	.8044	.2358	.6672	.0985	.5299
431390	10.3534	10.7848	11.2161	11.6475	12.0789	12.5103	12.9417	13.3731	13.8045	14.2359	14.6673	15.0987	15.5300
393	.3534	.7848	.2162	.6476	.0790	.5104	.9418	.3732	.8046	.2360	.6674	.0988	.5301
396	.3535	.7849	.2163	.6477	.0791	.5105	.9419	.3733	.8047	.2361	.6675	.0989	.5303
399	.3536	.7850	.2164	.6478	.0792	.5106	.9420	.3734	.8048	.2362	.6676	.0990	.5304
402	.3536	.7851	.2165	.6479	.0793	.5107	.9421	.3735	.8049	.2363	.6677	.0991	.5305
431405	10.3537	10.7851	11.2165	11.6479	12.0793	12.5107	12.9422	13.3736	13.8050	14.2364	14.6678	15.0992	15.5306
408	.3538	.7852	.2166	.6480	.0794	.5108	.9422	.3736	.8051	.2365	.6679	.0993	.5307
411	.3539	.7853	.2167	.6481	.0795	.5109	.9423	.3737	.8052	.2366	.6680	.0994	.5308
414	.3539	.7854	.2168	.6482	.0796	.5110	.9424	.3738	.8052	.2367	.6681	.0995	.5309
417	.3540	.7854	.2168	.6483	.0797	.5111	.9425	.3739	.8053	.2368	.6682	.0996	.5310
431420	10.3541	10.7855	11.2169	11.6483	12.0798	12.5112	12.9426	13.3740	13.8054	14.2369	14.6683	15.0997	15.5311
423	.3542	.7856	.2170	.6484	.0798	.5113	.9427	.3741	.8055	.2370	.6684	.0998	.5312
426	.3542	.7857	.2171	.6485	.0799	.5114	.9428	.3742	.8056	.2371	.6685	.0999	.5313
429	.3543	.7857	.2172	.6486	.0800	.5114	.9429	.3743	.8057	.2372	.6686	.1000	.5314
432	.3544	.7858	.2172	.6487	.0801	.5115	.9430	.3744	.8058	.2373	.6687	.1001	.5316
431435	10.3544	10.7859	11.2173	11.6487	12.0802	12.5116	12.9431	13.3745	13.8059	14.2374	14.6688	15.1002	15.5317
438	.3545	.7860	.2174	.6488	.0803	.5117	.9431	.3746	.8060	.2375	.6689	.1003	.5318
441	.3546	.7860	.2175	.6489	.0803	.5118	.9432	.3747	.8061	.2376	.6690	.1004	.5319
444	.3547	.7861	.2175	.6490	.0804	.5119	.9433	.3748	.8062	.2377	.6691	.1005	.5320
447	.3547	.7862	.2176	.6491	.0805	.5120	.9434	.3749	.8063	.2378	.6692	.1006	.5321
431450	10.3548	10.7863	11.2177	11.6492	12.0806	12.5121	12.9435	13.3750	13.8064	14.2379	14.6693	15.1008	15.5322
453	.3549	.7863	.2178	.6492	.0807	.5121	.9436	.3750	.8065	.2379	.6694	.1009	.5323
456	.3549	.7864	.2179	.6493	.0808	.5122	.9437	.3751	.8066	.2380	.6695	.1010	.5324
459	.3550	.7865	.2179	.6494	.0809	.5123	.9438	.3752	.8067	.2381	.6696	.1011	.5325
462	.3551	.7866	.2180	.6495	.0809	.5124	.9439	.3753	.8068	.2382	.6697	.1012	.5326
431465	10.3552	10.7866	11.2181	11.6496	12.0810	12.5125	12.9440	13.3754	13.8069	14.2383	14.6698	15.1013	15.5327
468	.3552	.7867	.2182	.6496	.0811	.5126	.9440	.3755	.8070	.2384	.6699	.1014	.5328
471	.3553	.7868	.2182	.6497	.0812	.5127	.9441	.3756	.8071	.2385	.6700	.1015	.5330
474	.3554	.7869	.2183	.6498	.0813	.5127	.9442	.3757	.8072	.2386	.6701	.1016	.5331
477	.3554	.7869	.2184	.6499	.0814	.5128	.9443	.3758	.8073	.2387	.6702	.1017	.5332
431480	10.3555	10.7870	11.2185	11.6500	12.0814	12.5129	12.9444	13.3759	13.8074	14.2388	14.6703	15.1018	15.5333
483	.3556	.7871	.2186	.6500	.0815	.5130	.9445	.3760	.8075	.2389	.6704	.1019	.5334
486	.3557	.7872	.2186	.6501	.0816	.5131	.9446	.3761	.8076	.2390	.6705	.1020	.5335
489	.3557	.7872	.2187	.6502	.0817	.5132	.9447	.3762	.8076	.2391	.6706	.1021	.5336
492	.3558	.7873	.2188	.6503	.0818	.5133	.9448	.3763	.8077	.2392	.6707	.1022	.5337
431495	10.3559	10.7874	11.2189	11.6504	12.0819	12.5134	12.9449	13.3763	13.8078	14.2393	14.6708	15.1023	15.5338
498	.3560	.7875	.2189	.6504	.0819	.5134	.9449	.3764	.8079	.2394	.6709	.1024	.5339
501	.3560	.7875	.2190	.6505	.0820	.5135	.9450	.3765	.8080	.2395	.6710	.1025	.5340
504	.3561	.7876	.2191	.6506	.0821	.5136	.9451	.3766	.8081	.2396	.6711	.1026	.5341
507	.3562	.7877	.2192	.6507	.0822	.5137	.9452	.3767	.8082	.2397	.0712	.1027	.5343
431510	10.3562	10.7878	11.2193	11.6508	12.0823	12.5138	12.9453	13.3768	13.8083	14.2398	14.6713	15.1029	15.5344
513	.3563	.7878	.2193	.6509	.0824	.5139	.9454	.3769	.8084	.2399	.6714	.1030	.5345
516	.3564	.7879	.2194	.6509	.0824	.5140	.9455	.3770	.8085	.2400	.6715	.1031	.5346
519	.3565	.7880	.2195	.6510	.0825	.5141	.9456	.3771	.8086	.2401	.6716	.1032	.5347
522	.3565	.7881	.2196	.6511	.0826	.5141	.9457	.3772	.8087	.2402	.6717	.1033	.5348
431525	10.3566	10.7881	11.2197	11.6512	12.0827	12.5142	12.9458	13.3773	13.8088	14.2403	14.6719	15.1034	15.5349
528	.3567	.7882	.2197	.6513	.0828	.5143	.9458	.3774	.8089	.2404	.6720	.1035	.5350
531	.3567	.7883	.2198	.6513	.0829	.5144	.9459	.3775	.8090	.2405	.6721	.1036	.5351
534	.3568	.7884	.2199	.6514	.0830	.5145	.9460	.3776	.8091	.2406	.6722	.1037	.5352
537	.3569	.7884	.2200	.6515	.0830	.5146	.9461	.3776	.8092	.2407	.6723	.1038	.5353
431540	10.3570	10.7885	11.2200	11.6516	12.0831	12.5147	12.9462	13.3777	13.8093	14.2408	14.6724	15.1039	15.5354
543	.3570	.7886	.2201	.6517	.0832	.5147	.9463	.3778	.9094	.2409	.6725	.1040	.5355
546	.3571	.7887	.2202	.6517	.0833	.5148	.9464	.3779	.8095	.2410	.6726	.1041	.5357
549	.3572	.7887	.2203	.6518	.0834	.5149	.9465	.3780	.8096	.2411	.6727	.1042	.5358
552	.3572	.7888	.2204	.6519	.0835	.5150	.9466	.3781	.8097	.2412	.6728	.1043	.5359
431555	10.3573	10.7889	11.2204	11.6520	12.0835	12.5151	12.9467	13.3782	13.8098	14.2413	14.6729	15.1044	15.5360
558	.3574	.7890	.2205	.6521	.0836	.5152	.9467	.3783	.8099	.2414	.6730	.1045	.5361
561	.3575	.7890	.2206	.6521	.0837	.5153	.9468	.3784	.8100	.2415	.6731	.1046	.5362
564	.3575	.7891	.2207	.6522	.0838	.5154	.9469	.3785	.8100	.2416	.6732	.1047	.5363
567	.3576	.7892	.2207	.6523	.0839	.5154	.9470	.3786	.8101	.2417	.6733	.1048	.5364
431570	10.3577	10.7893	11.2208	11.6524	12.0840	12.5155	12.9471	13.3787	13.8102	14.2418	14.6734	15.1050	15.5365
573	.3578	.7893	.2209	.6525	.0840	.5156	.9472	.3788	.8103	.2419	.6735	.1051	.5366
576	.3578	.7894	.2210	.6526	.0841	.5157	.9473	.3789	.8104	.2420	.6736	.1052	.5367
579	.3579	.7895	.2211	.6526	.0842	.5158	.9474	.3789	.8105	.2521	.6737	.1053	.5368
582	.3580	.7896	.2211	.6527	.0843	.5159	.9475	.3790	.8106	.2422	.6738	.1054	.5370
431585	10.3580	10.7896	11.2212	11.6528	12.0844	12.5160	12.9476	13.3791	13.8107	14.2423	14.6739	15.1055	15.5371
588	.3581	.7897	.2213	.6529	.0845	.5161	.9476	.3792	.8108	.2424	.6740	.1056	.5372
591	.3582	.7898	.2214	.6530	.0845	.5161	.9477	.3793	.8109	.2425	.6741	.1057	.5373
594	.3583	.7899	.2214	.6530	.0846	.5162	.9478	.3794	.8110	.2426	.6742	.1058	.5374
597	.3583	.7899	.2215	.6531	.0847	.5163	.9479	.3795	.8111	.2427	.6743	.1059	.5375
431600	10.3584	10.7900	11.2216	11.6532	12.0848	12.5164	12.9480	13.3796	13.8112	14.2428	14.6744	15.1060	15.5376

MEGACYCLES PER SECOND

BASIC FREQ.	HARMONICS 37	38	39	40	41	42	43	44	45	46	47	48	50
431300	15.9581	16.3894	16.8207	17.2520	17.6833	18.1146	18.5459	18.9772	19.4085	19.8398	20.2711	20.7024	21.5650
303	.9582	.3895	.8208	.2521	.6834	.1147	.5460	.9773	.4086	.8399	.2712	.7025	.5652
306	.9583	.3896	.8209	.2522	.6835	.1149	.5462	.9775	.4088	.8401	.2714	.7027	.5653
309	.9584	.3897	.8211	.2524	.6837	.1150	.5463	.9776	.4089	.8402	.2715	.7028	.5655
312	.9585	.3899	.8212	.2525	.6838	.1151	.5464	.9777	.4090	.8404	.2717	.7030	.5656
431315	15.9587	16.3900	16.8213	17.2526	17.6839	18.1152	18.5465	18.9779	19.4092	19.8405	20.2718	20.7031	21.5658
318	.9588	.3901	.8214	.2527	.6840	.1154	.5467	.9780	.4093	.8406	.2719	.7033	.5659
321	.9589	.3902	.8215	.2528	.6842	.1155	.5468	.9781	.4094	.8408	.2721	.7034	.5661
324	.9590	.3903	.8216	.2530	.6843	.1156	.5469	.9783	.4096	.8409	.2722	.7037	.5662
327	.9591	.3904	.8218	.2531	.6844	.1157	.5471	.9784	.4097	.8410	.2724	.7036	.5664
431330	15.9592	16.3905	16.8219	17.2532	17.6845	18.1159	18.5472	18.9785	19.4099	19.8412	20.2725	20.7038	21.5665
333	.9593	.3907	.8220	.2533	.6847	.1160	.5473	.9787	.4100	.8413	.2727	.7040	.5667
336	.9594	.3908	.8221	.2534	.6848	.1161	.5474	.9788	.4101	.8415	.2728	.7041	.5668
339	.9595	.3909	.8222	.2536	.6849	.1162	.5476	.9789	.4103	.8416	.2729	.7043	.5670
342	.9597	.3910	.8223	.2537	.6850	.1164	.5477	.9790	.4104	.8417	.2731	.7044	.5671
431345	15.9598	16.3911	16.8225	17.2538	17.6851	18.1165	18.5478	18.9792	19.4105	19.8419	20.2732	20.7046	21.5673
348	.9599	.3912	.8226	.2539	.6853	.1166	.5480	.9793	.4107	.8420	.2734	.7047	.5674
351	.9600	.3913	.8227	.2540	.6854	.1167	.5481	.9794	.4108	.8421	.2735	.7048	.5676
354	.9601	.3915	.8228	.2542	.6855	.1169	.5482	.9796	.4109	.8423	.2736	.7050	.5677
357	.9602	.3916	.8229	.2543	.6856	.1170	.5484	.9797	.4111	.8424	.2738	.7051	.5679
431360	15.9603	16.3917	16.8230	17.2544	17.6858	18.1171	18.5485	18.9798	19.4112	19.8426	20.2739	20.7053	21.5680
363	.9604	.3918	.8232	.2545	.6859	.1172	.5486	.9800	.4113	.8427	.2741	.7054	.5682
366	.9605	.3919	.8233	.2546	.6860	.1174	.5487	.9801	.4115	.8428	.2742	.7056	.5683
369	.9607	.3920	.8234	.2548	.6861	.1175	.5489	.9802	.4116	.8430	.2743	.7057	.5685
372	.9608	.3921	.8235	.2549	.6863	.1176	.5490	.9804	.4117	.8431	.2745	.7059	.5686
431375	15.9609	16.3923	16.8236	17.2550	17.6864	18.1178	18.5491	18.9805	19.4119	19.8433	20.2746	20.7060	21.5688
378	.9610	.3924	.8237	.2551	.6865	.1179	.5493	.9806	.4120	.8434	.2748	.7061	.5689
381	.9611	.3925	.8239	.2552	.6866	.1180	.5494	.9808	.4121	.8435	.2749	.7063	.5691
384	.9612	.3926	.8240	.2554	.6867	.1181	.5495	.9809	.4123	.8437	.2750	.7064	.5692
387	.9613	.3927	.8241	.2555	.6869	.1183	.5496	.9810	.4124	.8438	.2752	.7066	.5694
431390	15.9614	16.3928	16.8242	17.2556	17.6870	18.1184	18.5498	18.9812	19.4126	19.8439	20.2753	20.7067	21.5695
393	.9615	.3929	.8243	.2557	.6871	.1185	.5499	.9813	.4127	.8441	.2755	.7069	.5697
396	.9617	.3930	.8244	.2558	.6872	.1186	.5500	.9814	.4128	.8442	.2756	.7070	.5698
399	.9618	.3932	.8246	.2560	.6874	.1188	.5502	.9816	.4130	.8444	.2758	.7072	.5700
402	.9619	.3933	.8247	.2561	.6875	.1189	.5503	.9817	.4131	.8445	.2759	.7073	.5701
431405	15.9620	16.3934	16.8248	17.2562	17.6876	18.1190	18.5504	18.9818	19.4132	19.8446	20.2760	20.7074	21.5703
408	.9621	.3935	.8249	.3563	.6877	.1191	.5505	.9820	.4134	.8448	.2762	.7076	.5704
411	.9622	.3936	.8250	.2564	.6879	.1193	.5507	.9821	.4135	.8449	.2763	.7077	.5706
414	.9623	.3937	.8251	.2566	.6880	.1194	.5508	.9822	.4136	.8450	.2765	.7079	.5707
417	.9624	.3938	.8253	.2567	.6881	.1195	.5509	.9823	.4138	.8452	.2766	.7080	.5709
431420	15.9625	16.3940	16.8254	17.2568	17.6882	18.1196	18.5511	18.9825	19.4139	19.8453	20.2767	20.7082	21.5710
423	9627	.3941	.8255	.2569	.6883	.1198	.5512	.9826	.4140	.8455	.2769	.7083	.5712
426	.9628	.3942	.8256	.2570	.6885	.1199	.5513	.9827	.4142	.8456	.2770	.7084	.5713
429	.9629	.3943	.8257	.2572	.6886	.1200	.5514	.9829	.4143	.8457	.2772	.7086	.5715
432	9630	.3944	.8258	.2573	.6887	.1201	.5516	.9830	.4144	.8459	.2773	.7087	.5716
431435	15.9631	16.3945	16.8260	17.2574	17.6888	18.1203	18.5517	18.9831	19.4146	19.8460	20.2774	20.7089	21.5718
438	.9632	.3946	.8261	.2575	.6890	.1204	.5518	.9833	.4147	.8461	.2776	.7090	.5719
441	.9633	.3948	.8262	.2576	.6891	.1205	.5520	.9834	.4148	.8463	.2777	.7092	.5721
444	.9634	.3949	.8263	.2578	.6892	.1206	.5521	.9835	.4150	.8464	.2779	.7093	.5722
447	.9635	.3950	.8264	.2579	.6893	.1208	.5522	.9837	.4151	.8466	.2780	.7095	.5724
431450	15.9637	16.3951	16.8266	17.2580	17.6895	18.1209	18.5524	18.9838	19.4153	19.8467	20.2782	20.7096	21.5725
453	.9638	.3952	.8267	.2581	.6896	.1210	.5525	.9839	.4154	.8468	.2783	.7097	.5727
456	.9639	.3953	.8268	.2582	.6897	.1212	.5526	.9841	.4155	.8470	.2784	.7099	.5728
459	.9640	.3954	.8269	.2584	.6898	.1213	.5527	.9842	.4157	.8471	.2786	.7100	.5730
462	.9641	.3956	.8270	.2585	.6899	.1214	.5529	.9843	.4158	.8473	.2787	.7102	.5731
431465	15.9642	16.3957	16.8271	17.2586	17.6901	18.1215	18.5530	18.9845	19.4159	19.8474	20.2789	20.7103	21.5733
468	.9643	.3958	.8273	.2587	.6902	.1217	.5531	.9846	.4161	.8475	.2790	.7105	.5734
471	.9644	.3959	.8274	.2588	.6903	.1218	.5533	.9847	.4162	.8477	.2791	.7106	.5736
474	.9645	.3960	.8275	.2590	.6904	.1219	.5534	.9849	.4163	.8478	.2793	.7108	.5737
477	.9646	.3961	.8276	.2591	.6906	.1220	.5535	.9850	.4165	.8479	.2794	.7109	.5739
431480	15.9648	16.3962	16.8277	17.2592	17.6907	18.1222	18.5536	18.9851	19.4166	19.8481	20.2796	20.7110	21.5740
483	.9649	.3964	.8278	.2593	.6908	.1223	.5538	.9853	.4167	.8482	.2797	.7112	.5742
486	.9650	.3965	.8280	.2594	.6909	.1224	.5539	.9854	.4169	.8484	.2798	.7113	.5743
489	.9651	.3966	.8281	.2596	.6910	.1225	.5540	.9855	.4170	.8485	.2800	.7115	.5745
492	.9652	.3967	.8282	.2597	.6912	.1227	.5542	.9856	.4171	.8486	.2801	.7116	.5746
431495	15.9653	16.3968	16.8283	17.2598	17.6913	18.1228	18.5543	18.9858	19.4173	19.8488	20.2803	20.7118	21.5748
498	.9654	.3969	.8284	.2599	.6914	.1229	.5544	.9859	.4174	.8489	.2804	.7119	.5749
501	.9655	.3970	.8285	.2600	.6915	.1230	.5545	.9860	.4175	.8490	.2805	.7120	.5751
504	.9656	.3972	.8287	.2602	.6917	.1232	.5547	.9862	.4177	.8492	.2807	.7122	.5752
507	.9658	.3973	.8288	.2603	.6918	.1233	.5548	.9863	.4178	.8493	.2808	.7123	.5754
431510	15.9659	16.3974	16.8289	17.2604	17.6919	18.1234	18.5549	18.9864	19.4180	19.8495	20.2810	20.7125	21.5755
513	.9660	.3975	.8290	.2605	.6920	.1235	.5551	.9866	.4181	.8496	.2811	.7126	.5757
516	.9661	.3976	.8291	.2606	.6922	.1237	.5552	.9867	.4182	.8497	.2813	.7128	.5758
519	.9662	.3977	.8292	.2608	.6923	.1238	.5553	.9868	.4184	.8499	.2814	.7129	.5760
522	.9663	.3978	.8294	.2609	.6924	.1239	.5554	.9870	.4185	.8500	.2815	.7131	.5761
431525	15.9664	16.3980	16.8295	17.2610	17.6925	18.1241	18.5556	18.9871	19.4186	19.8502	20.2817	20.7132	21.5763
528	.9665	.3981	.8296	.2611	.6926	.1242	.5557	.9872	.4188	.8503	.2818	.7133	.5764
531	.9666	.3982	.8297	.2612	.6928	.1243	.5558	.9874	.4189	.8504	.2820	.7135	.5766
534	.9668	.3983	.8298	.2614	.6929	.1244	.5560	.9875	.4190	.8506	.2821	.7136	.5767
537	.9669	.3984	.8299	.2615	.6930	.1246	.5561	.9876	.4192	.8507	.2822	.7138	.5769
431540	15.9670	16.3985	16.8301	17.2616	17.6931	18.1247	18.5562	18.9878	19.4193	19.8508	20.2824	20.7139	21.5770
543	.9671	.3986	.8302	.2617	.6933	.1248	.5563	.9879	.4194	.8510	.2825	.7141	.5772
546	.9672	.3987	.8303	.2618	.6934	.1249	.5565	.9880	.4196	.8511	.2827	.7142	.5773
549	.9673	.3989	.8304	.2620	.6935	.1251	.5566	.9882	.4197	.8513	.2828	.7144	.5775
552	.9674	.3990	.8305	.2621	.6936	.1252	.5567	.9883	.4198	.8514	.2829	.7145	.5776
431555	15.9675	16.3991	16.8306	17.2622	17.6938	18.1253	18.5569	18.9884	19.4200	19.8515	20.2831	20.7146	21.5778
558	.9676	.3992	.8308	.2623	.6939	.1254	.5570	.9886	.4201	.8517	.2832	.7148	.5779
561	.9678	.3993	.8309	.2624	.6940	.1256	.5571	.9887	.4202	.8518	.2834	.7149	.5781
564	.9679	.3994	.8310	.2626	.6941	.1257	.5573	.9888	.4204	.8519	.2835	.7151	.5782
567	.9680	.3995	.8311	.2627	.6942	.1258	.5574	.9889	.4205	.8521	.2836	.7152	.5784
431570	15.9681	16.3997	16.8312	17.2628	17.6944	18.1259	18.5575	18.9891	19.4207	19.8522	20.2838	20.7154	21.5785
573	.9682	.3998	.8313	.2629	.6945	.1261	.5576	.9892	.4208	.8524	.2839	.7155	.5787
576	.9683	.3999	.8315	.2630	.6946	.1262	.5578	.9893	.4209	.8525	.2841	.7156	.5788
579	.9684	.4000	.8316	.2632	.6947	.1263	.5579	.9895	.4211	.8526	.2842	.7158	.5790
582	.9685	.4001	.8317	.2633	.6949	.1264	.5580	.9896	.4212	.8528	.2844	.7159	.5791
431585	15.9686	16.4002	16.8318	17.2634	17.6950	18.1266	18.5582	18.9897	19.4213	19.8529	20.2845	20.7161	21.5793
588	.9688	.4003	.8319	.2635	.6951	.1267	.5583	.9899	.4215	.8530	.2846	.7162	.5794
591	.9689	.4005	.8320	.2636	.6952	.1268	.5584	.9900	.4216	.8532	.2848	.7164	.5796
594	.9690	.4006	.8322	.2638	.6954	.1269	.5585	.9901	.4217	.8533	.2849	.7165	.5797
597	.9691	.4007	.8323	.2639	.6955	.1271	.5587	.9903	.4219	.8535	.2851	.7167	.5799
431600	15.9692	16.4008	16.8324	17.2640	17.6956	18.1272	18.5588	18.9904	19.4220	19.8536	20.2852	20.7168	21.5800

HARMONICS

BASIC FREQ.	24	25	26	27	28	29	30	31	32	33	34	35	36
431600	10.3584	10.7900	11.2216	11.6532	12.0848	12.5164	12.9480	13.3796	13.8112	14.2428	14.6744	15.1060	15.5376
603	.3585	.7901	.2217	.6533	.0849	.5165	.9481	.3797	.8113	.2429	.6745	.1061	.5377
606	.3585	.7902	.2218	.6534	.0850	.5166	.9482	.3798	.8114	.2430	.6746	.1062	.5378
609	.3586	.7902	.2218	.6534	.0851	.5167	.9483	.3799	.8115	.2431	.6747	.1063	.5379
612	.3587	.7903	.2219	.6535	.0851	.5167	.9484	.3800	.8116	.2432	.6748	.1064	.5380
431615	10.3588	10.7904	11.2220	11.6536	12.0852	12.5168	12.9485	13.3801	13.8117	14.2433	14.6749	15.1065	15.5381
618	.3588	.7905	.2221	.6537	.0853	.5169	.9485	.3802	.8118	.2434	.6750	.1066	.5382
621	.3589	.7905	.2221	.6538	.0854	.5170	.9486	.3803	.8119	.2435	.6751	.1067	.5384
624	.3590	.7906	.2222	.6538	.0855	.5171	.9487	.3803	.8120	.2436	.6752	.1068	.5385
627	.3590	.7907	.2223	.6539	.0856	.5172	.9488	.3804	.8121	.2437	.6753	.1069	.5386
431630	10.3591	10.7908	11.2224	11.6540	12.0856	12.5173	12.9489	13.3805	13.8122	14.2438	14.6754	15.1071	15.5387
633	.3592	.7908	.2225	.6541	.0857	.5174	.9490	.3806	.8123	.2439	.6755	.1072	.5388
636	.3593	.7909	.2225	.6542	.0858	.5174	.9491	.3807	.8124	.2440	.6756	.1073	.5389
639	.3593	.7910	.2226	.6543	.0859	.5175	.9492	.3808	.8124	.2441	.6757	.1074	.5390
642	.3594	.7911	.2227	.6543	.0860	.5176	.9493	.3809	.8125	.2442	.6758	.1075	.5391
431645	10.3595	10.7911	11.2228	11.6544	12.0861	12.5177	12.9494	13.3810	13.8126	14.2443	14.6759	15.1076	15.5392
648	.3596	.7912	.2228	.6545	.0861	.5178	.9494	.3811	.8127	.2444	.6760	.1077	.5393
651	.3596	.7913	.2229	.6546	.0862	.5179	.9495	.3812	.8128	.2445	.6761	.1078	.5394
654	.3597	.7914	.2230	.6547	.0863	.5180	.9496	.3813	.8129	.2446	.6762	.1079	.5395
657	.3598	.7914	.2231	.6547	.0864	.5181	.9497	.3814	.8130	.2447	.6763	.1080	.5397
431660	10.3598	10.7915	11.2232	11.6548	12.0865	12.5181	12.9498	13.3815	13.8131	14.2448	14.6764	15.1081	15.5398
663	.3599	.7916	.2232	.6549	.0866	.5182	.9499	.3816	.8132	.2449	.6765	.1082	.5399
666	.3600	.7917	.2233	.6550	.0866	.5183	.9500	.3816	.8133	.2450	.6766	.1083	.5400
669	.3601	.7917	.2234	.6551	.0867	.5184	.9501	.3817	.8134	.2451	.6767	.1084	.5401
672	.3601	.7918	.2235	.6551	.0868	.5185	.9502	.3818	.8135	.2452	.6768	.1085	.5402
431675	10.3602	10.7919	11.2236	11.6552	12.0869	12.5186	12.9503	13.3819	13.8136	14.2453	14.6770	15.1086	15.5403
678	.3603	.7920	.2236	.6553	.0870	.5187	.9503	.3820	.8137	.2454	.6771	.1087	.5404
681	.3603	.7920	.2237	.6554	.0871	.5187	.9504	.3821	.8138	.2455	.6772	.1088	.5405
684	.3604	.7921	.2238	.6555	.0872	.5188	.9505	.3822	.8139	.2456	.6773	.1089	.5406
687	.3605	.7922	.2239	.6555	.0872	.5189	.9506	.3823	.8140	.2457	.6774	.1090	.5407
431690	10.3606	10.7923	11.2239	11.6556	12.0873	12.5190	12.9507	13.3824	13.8141	14.2458	14.6775	15.1092	15.5408
693	.3606	.7923	.2240	.6557	.0874	.5191	.9508	.3825	.8142	.2459	.6776	.1093	.5409
696	.3607	.7924	.2241	.6558	.0875	.5192	.9509	.3826	.8143	.2460	.6777	.1094	.5411
699	.3608	.7925	.2242	.6559	.0876	.5193	.9510	.3827	.8144	.2461	.6778	.1095	.5412
702	.3608	.7926	.2243	.6560	.0877	.5194	.9511	.3828	.8145	.2462	.6779	.1096	.5413
431705	10.3609	10.7926	11.2243	11.6560	12.0877	12.5194	12.9512	13.3829	13.8146	14.2463	14.6780	15.1097	15.5414
708	.3610	.7927	.2244	.6561	.0878	.5195	.9512	.3829	.8147	.2464	.6781	.1098	.5415
711	.3611	.7928	.2245	.6562	.0879	.5196	.9513	.3830	.8148	.2465	.6782	.1099	.5416
714	.3611	.7929	.2246	.6563	.0880	.5197	.9514	.3831	.8148	.2466	.6783	.1100	.5417
717	.3612	.7929	.2246	.6564	.0881	.5198	.9515	.3832	.8149	.2467	.6784	.1101	.5418
431720	10.3613	10.7930	11.2247	11.6564	12.0882	12.5199	12.9516	13.3833	13.8150	14.2468	14.6785	15.1102	15.5419
723	.3614	.7931	.2248	.6565	.0882	.5200	.9517	.3834	.8151	.2469	.6786	.1103	.5420
726	.3614	.7932	.2249	.6566	.0883	.5201	.9518	.3835	.8152	.2470	.6787	.1104	.5421
729	.3615	.7932	.2250	.6567	.0884	.5201	.9519	.3836	.8153	.2471	.6788	.1105	.5422
732	.3616	.7933	.2250	.6568	.0885	.5202	.9520	.3837	.8154	.2472	.6789	.1106	.5424
431735	10.3616	10.7934	11.2251	11.6568	12.0886	12.5203	12.9521	13.3838	13.8155	14.2473	14.6790	15.1107	15.5425
738	.3617	.7935	.2252	.6569	.0887	.5204	.9521	.3839	.8156	.2474	.6791	.1108	.5426
741	.3618	.7935	.2253	.6570	.0887	.5205	.9522	.3840	.8157	.2475	.6792	.1109	.5327
744	.3619	.7936	.2253	.6571	.0888	.5206	.9523	.3841	.8158	.2476	.6793	.1110	.5428
747	.3619	.7937	.2254	.6572	.0889	.5207	.9524	.3842	.8159	.2477	.6794	.1111	.5429
431750	10.3620	10.7938	11.2255	11.6573	12.0890	12.5208	12.9525	13.3843	13.8160	14.2478	14.6795	15.1113	15.5430
753	.3621	.7938	.2256	.6573	.0891	.5208	.9526	.3843	.8161	.2478	.6796	.1114	.5431
756	.3621	.7939	.2257	.6574	.0892	.5209	.9527	.3844	.8162	.2479	.6797	.1115	.5432
759	.3622	.7940	.2257	.6575	.0893	.5210	.9528	.3845	.8163	.2480	.6798	.1116	.5433
762	.3623	.7941	.2258	.6576	.0893	.5211	.9529	.3846	.8164	.2481	.6799	.1117	.5434
431765	10.3624	10.7941	11.2259	11.6577	12.0894	12.5212	12.9530	13.3847	13.8165	14.2482	14.6800	15.1118	15.5435
768	.3624	.7942	.2260	.6577	.0895	.5213	.9530	.3848	.8166	.2483	.6801	.1119	.5436
771	.3625	.7943	.2260	.6578	.0896	.5214	.9531	.3849	.8167	.2484	.6802	.1120	.5438
774	.3626	.7944	.2261	.6579	.0897	.5214	.9532	.3850	.8168	.2485	.6803	.1121	.5439
777	.3626	.7944	.2262	.6580	.0898	.5215	.9533	.3851	.8169	.2486	.6804	.1122	.5440
431780	10.3627	10.7945	11.2263	11.6581	12.0898	12.5216	12.9534	13.4852	13.8170	14.2487	14.6805	15.1123	15.5441
783	.3628	.7946	.2264	.6581	.0899	.5217	.9535	.3853	.8171	.2488	.6806	.1124	.5442
786	.3629	.7947	.2264	.6582	.0900	.5218	.9536	.3854	.8172	.2489	.6807	.1125	.5443
789	.3629	.7947	.2265	.6583	.0901	.5219	.9537	.3855	.8172	.2490	.6808	.1126	.5444
792	.3630	.7948	.2266	.6584	.0902	.5220	.9538	.3856	.8173	.2491	.6809	.1127	.5445
431795	10.3631	10.7949	11.2267	11.6585	12.0903	12.5221	12.9539	13.3856	13.8174	14.2492	14.6810	15.1128	15.5446
798	.3632	.7950	.2267	.6585	.0903	.5221	.9539	.3857	.8175	.2493	.6811	.1129	.5447
801	.3632	.7950	.2268	.6586	.0904	.5222	.9540	.3858	.8176	.2494	.6812	.1130	.5448
804	.3633	.7951	.2269	.6587	.0905	.5223	.9541	.3859	.8177	.2495	.6813	.1131	.5449
807	.3624	.7952	.2270	.6588	.0906	.5224	.9542	.3860	.8178	.2496	.6814	.1132	.5451
431810	10.3634	10.7953	11.2271	11.6589	12.0907	12.5225	12.9543	12.3861	13.8179	14.2497	14.6815	15.1134	15.5452
813	.3635	.7953	.2271	.6590	.0908	.5226	.9544	.3862	.8180	.2498	.6816	.1135	.5453
816	.3636	.7954	.2272	.6590	.0908	.5227	.9545	.3863	.8181	.2499	.6817	.1136	.5454
819	.3637	.7955	.2273	.6591	.0909	.5228	.9546	.3864	.8182	.2500	.6818	.1137	.5455
822	.3637	.7956	.2274	.6592	.0910	.5228	.9547	.3865	.8183	.2501	.6819	.1138	.5456
431825	10.3638	10.7956	11.2275	11.6593	12.0911	12.5229	12.9548	13.3866	13.8184	14.2502	14.6821	15.1139	15.5457
828	.3629	.7957	.2275	.6594	.0912	.5230	.9548	.3867	.8185	.2503	.6822	.1140	.5458
831	.3639	.7958	.2276	.6594	.0913	.5231	.9549	.3868	.8186	.2504	.6823	.1141	.5459
834	.3640	.7959	.2277	.6595	.0914	.5232	.9550	.3869	.8187	.2505	.6824	.1142	.5460
837	.3641	.7959	.2278	.6596	.0914	.5233	.9551	.3869	.8188	.2506	.6825	.1143	.5461
431840	10.3642	10.7960	11.2278	11.6597	12.0915	12.5234	12.9552	13.3870	13.8189	14.2507	14.6826	15.1144	15.5462
843	.3642	.7961	.2279	.6598	.0916	.5234	.9553	.3871	.8190	.2508	.6827	.1145	.5463
846	.3643	.7962	.2280	.6598	.0917	.5235	.9554	.3872	.8191	.2509	.6828	.1146	.5465
849	.3644	.7962	.2281	.6599	.0918	.5236	.9555	.3873	.8192	.2510	.6829	.1147	.5466
852	.3644	.7963	.2282	.6600	.0919	.5237	.9556	.3874	.8193	.2511	.6830	.1148	.5467
431855	10.3645	10.7964	11.2282	11.6601	12.0919	12.5238	12.9557	13.3875	13.8194	14.2512	14.6831	15.1149	15.5468
858	.3646	.7965	.2283	.6602	.0920	.5239	.9557	.3876	.8195	.2513	.6832	.1150	.5469
861	.3647	.7965	.2284	.6602	.0921	.5240	.9558	.3877	.8196	.2514	.6833	.1151	.5470
864	.3647	.7966	.2285	.6603	.0922	.5241	.9559	.3878	.8196	.2515	.6834	.1152	.5471
867	.3648	.7967	.2285	.6604	.0923	.5241	.9560	.3879	.8197	.2516	.6835	.1153	.5472
431870	10.3649	10.7968	11.2286	11.6605	12.0924	12.5242	12.9561	13.3880	13.8198	14.2517	14.6836	15.1155	15.5473
873	.3650	.7968	.2287	.6606	.0924	.5243	.9562	.3881	.8199	.2518	.6837	.1156	.5474
876	.3650	.7969	.2288	.6607	.0925	.5244	.9563	.3882	.8200	.2519	.6838	.1157	.5475
879	.3651	.7970	.2289	.6607	.0926	.5245	.9564	.3882	.8201	.2520	.6839	.1158	.5476
882	.3652	.7971	.2289	.6608	.0927	.5246	.9565	.3883	.8202	.2521	.6840	.1159	.5478
431885	10.3652	10.7971	11.2290	11.6609	12.0928	12.5247	12.9566	13.3884	13.8203	14.2522	14.6841	15.1160	15.5479
888	.3653	.7972	.2291	.6610	.0929	.5248	.9566	.3885	.8204	.2523	.6842	.1161	.5480
891	.3654	.7973	.2292	.6611	.0929	.5248	.9567	.3886	.8205	.2524	.6843	.1162	.5481
894	.3655	.7974	.2292	.6611	.0930	.5249	.9568	.3887	.8206	.2525	.6844	.1163	.5482
897	.3655	.7974	.2293	.6612	.0931	.5250	.9569	.3888	.8207	.2526	.6845	.1164	.5483
431900	10.3656	10.7975	11.2294	11.6613	12.0932	12.5251	12.9570	13.3889	13.8208	14.2527	14.6846	15.1165	15.5484

MEGACYCLES PER SECOND

HARMONICS

BASIC FREQ.	37	38	39	40	41	42	43	44	45	46	47	48	50
431600	15.9692	16.4008	16.8324	17.2640	17.6956	18.1272	18.5588	18.9904	19.4220	19.8536	20.2852	20.7168	21.5800
603	.9693	.4009	.8325	.2641	.6957	.1273	.5589	.9905	.4221	.8537	.2853	.7169	.5802
606	.9694	.4010	.8326	.2642	.6958	.1275	.5591	.9907	.4223	.8539	.2855	.7171	.5803
609	.9695	.4011	.8328	.2644	.6960	.1276	.5592	.9908	.4224	.8540	.2856	.7172	.5805
612	.9696	.4013	.8329	.2645	.6961	.1277	.5593	.9909	.4225	.8542	.2858	.7174	.5806
431615	15.9698	16.4014	16.8330	17.2646	17.6962	18.1278	18.5594	18.9911	19.4227	19.8543	20.2859	20.7175	21.5808
618	.9699	.4015	.8331	.2647	.6963	.1280	.5596	.9912	.4228	.8544	.2860	.7177	.5809
621	.9700	.4016	.8332	.2648	.6965	.1281	.5597	.9913	.4229	.8546	.2862	.7178	.5811
624	.9701	.4017	.8333	.2650	.6966	.1282	.5598	.9915	.4231	.8547	.2863	.7180	.5812
627	.9702	.4018	.8335	.2651	.6967	.1283	.5600	.9916	.4232	.8548	.2865	.7181	.5814
431630	15.9703	16.4019	16.8336	17.2652	17.6968	18.1285	18.5601	18.9917	19.4234	19.8550	20.2866	20.7182	21.5815
633	.9704	.4021	.8337	.2653	.6970	.1286	.5602	.9919	.4235	.8551	.2868	.7184	.5817
636	.9705	.4022	.8338	.2654	.6971	.1287	.5603	.9920	.4236	.8553	.2869	.7185	.5818
639	.9706	.4023	.8339	.2656	.6972	.1288	.5605	.9921	.4238	.8554	.2870	.7187	.5820
642	.9708	.4024	.8340	.2657	.6973	.1290	.5606	.9922	.4239	.8555	.2872	.7188	.5821
431645	15.9709	16.4025	16.8342	17.2658	17.6974	18.1291	18.5607	18.9924	19.4240	19.8557	20.2873	20.7190	21.5823
648	.9710	.4026	.8343	.2659	.6976	.1292	.5609	.9925	.4242	.8558	.2875	.7191	.5824
651	.9711	.4027	.8344	.2660	.6977	.1293	.5610	.9926	.4243	.8559	.2876	.7192	.5826
654	.9712	.4029	.8345	.2662	.6978	.1295	.5611	.9928	.4244	.8561	.2877	.7194	.5827
657	.9713	.4030	.8346	.2663	.6979	.1296	.5613	.9929	.4246	.8562	.2879	.7195	.5829
431660	15.9714	16.4031	16.8347	17.2664	17.6981	18.1297	18.5614	18.9930	19.4247	19.8564	20.2880	20.7197	21.5830
663	.9715	.4032	.8349	.2665	.6982	.1298	.5615	.9932	.4248	.8565	.2882	.7198	.5832
666	.9716	.4033	.8350	.2666	.6983	.1300	.5616	.9933	.4250	.8566	.2883	.7200	.5833
669	.9718	.4034	.8351	.2668	.6984	.1301	.5618	.9934	.4251	.8568	.2884	.7201	.5835
672	.9719	.4035	.8352	.2669	.6986	.1302	.5619	.9936	.4252	.8569	.2886	.7203	.5836
431675	15.9720	16.4037	16.8353	17.2670	17.6987	18.1304	18.5620	18.9937	19.4254	19.8571	20.2887	20.7204	21.5838
678	.9721	.4038	.8354	.2671	.6988	.1305	.5622	.9938	.4255	.8572	.2889	.7205	.5839
681	.9722	.4039	.8356	.2672	.6989	.1306	.5623	.9940	.4256	.8573	.2890	.7207	.5841
684	.9723	.4040	.8357	.2674	.6990	.1307	.5624	.9941	.4258	.8575	.2891	.7208	.5842
687	.9724	.4041	.8358	.2675	.6992	.1309	.5625	.9942	.4259	.8576	.2893	.7210	.5844
431690	15.9725	16.4042	16.8359	17.2676	17.6993	18.1310	18.5627	18.9944	19.4261	19.8577	20.2894	20.7211	21.5845
693	.9726	.4043	.8360	.2677	.6994	.1311	.5628	.9945	.4262	.8579	.2896	.7213	.5847
696	.9728	.4044	.8361	.2678	.6995	.1312	.5629	.9946	.4263	.8580	.2897	.7214	.5848
699	.9729	.4046	.8363	.2680	.6997	.1314	.5631	.9948	.4265	.8582	.2899	.7216	.5850
702	.9730	.4047	.8364	.2681	.6998	.1315	.5632	.9949	.4266	.8583	.2900	.7217	.5851
431705	15.9731	16.4048	16.8365	17.2682	17.6999	18.1316	18.5633	18.9950	19.4267	19.8584	20.2901	20.7218	21.5853
708	.9732	.4049	.8366	.2683	.7000	.1317	.5634	.9952	.4269	.8586	.2903	.7220	.5854
711	.9733	.4050	.8367	.2684	.7002	.1319	.5636	.9953	.4270	.8587	.2904	.7221	.5856
714	.9734	.4051	.8368	.2686	.7003	.1320	.5637	.9954	.4271	.8588	.2906	.7223	.5857
717	.9735	.4052	.8370	.2687	.7004	.1321	.5638	.9955	.4273	.8590	.2907	.7224	.5859
431720	15.9736	16.4054	16.8371	17.2688	17.7005	18.1322	18.5640	18.9957	19.4274	19.8591	20.2908	20.7226	21.5860
723	.9738	.4055	.8372	.2689	.7006	.1324	.5641	.9958	.4275	.8593	.2910	.7227	.5862
726	.9739	.4056	.8373	.2690	.7008	.1325	.5642	.9959	.4277	.8594	.2911	.7228	.5863
729	.9740	.4057	.8374	.2692	.7009	.1326	.5643	.9961	.4278	.8595	.2913	.7230	.5865
732	.9741	.4058	.8375	.2693	.7010	.1327	.5645	.9962	.4279	.8597	.2914	.7231	.5866
431735	15.9742	16.4059	16.8377	17.2694	17.7011	18.1329	18.5646	18.9963	19.4281	19.8598	20.2915	20.7233	21.5868
738	.9743	.4060	.8378	.2695	.7013	.1330	.5647	.9965	.4282	.8599	.2917	.7234	.5869
741	.9744	.4062	.8379	.2696	.7014	.1331	.5649	.9966	.4283	.8601	.2918	.7236	.5871
744	.9745	.4063	.8380	.2698	.7015	.1332	.5650	.9967	.4285	.8602	.2920	.7237	.5872
747	.9746	.4064	.8381	.2699	.7016	.1334	.5651	.9969	.4286	.8604	.2921	.7239	.5874
431750	15.9748	16.4065	16.8383	17.2700	17.7018	18.1335	18.5653	18.9970	19.4288	19.8605	20.2923	20.7240	21.5875
753	.9749	.4066	.8384	.2701	.7019	.1336	.5654	.9971	.4289	.8606	.2924	.7241	.5877
756	.9750	.4067	.8385	.2702	.7020	.1338	.5655	.9973	.4290	.8608	.2925	.7243	.5878
759	.9751	.4068	.8386	.2704	.7021	.1339	.5656	.9974	.4292	.8609	.2927	.7244	.5880
762	.9752	.4070	.8387	.2705	.7022	.1340	.5658	.9975	.4293	.8611	.2928	.7246	.5881
431765	15.9753	16.4071	16.8388	17.2706	17.7024	18.1341	18.5659	18.9977	19.4294	19.8612	20.2930	20.7247	21.5883
768	.9754	.4072	.8390	.2707	.7025	.1343	.5660	.9978	.4296	.8613	.2931	.7249	.5884
771	.9755	.4073	.8391	.2708	.7026	.1344	.5662	.9979	.4297	.8615	.2932	.7250	.5886
774	.9756	.4074	.8392	.2710	.7027	.1345	.5663	.9981	.4298	.8616	.2934	.7252	.5887
777	.9757	.4075	.8393	.2711	.7029	.1346	.5664	.9982	.4300	.8617	.2935	.7253	.5889
431780	15.9759	16.4076	16.8394	17.2712	17.7030	18.1348	18.5665	18.9983	19.4301	19.8619	20.2937	20.7254	21.5890
783	.9760	.4078	.8395	.2713	.7031	.1349	.5667	.9985	.4302	.8620	.2938	.7256	.5892
786	.9761	.4079	.8397	.2714	.7032	.1350	.5668	.9986	.4304	.8622	.2939	.7257	.5893
789	.9762	.4080	.8398	.2716	.7033	.1351	.5669	.9987	.4305	.8623	.2941	.7259	.5895
792	.9763	.4081	.8399	.2717	.7035	.1353	.5671	.9988	.4306	.8624	.2942	.7260	.5896
431795	15.9764	16.4082	16.8400	17.2718	17.7036	18.1354	18.5672	18.9990	19.4308	19.8626	20.2944	20.7262	21.5898
798	.9765	.4083	.8401	.2719	.7037	.1355	.5673	.9991	.4309	.8627	.2945	.7263	.5899
801	.9766	.4084	.8402	.2720	.7038	.1356	.5674	.9992	.4310	.8628	.2946	.7264	.5901
804	.9767	.4086	.8404	.2722	.7040	.1358	.5676	.9994	.4312	.8630	.2948	.7266	.5902
807	.9769	.4087	.8405	.2723	.7041	.1359	.5677	.9995	.4313	.8631	.2949	.7267	.5904
431810	15.9770	16.4088	16.8406	17.2724	17.7042	18.1360	18.5678	18.9996	19.4315	19.8633	20.2951	20.7269	21.5905
813	.9771	.4089	.8407	.2725	.7043	.1361	.5680	.9998	.4316	.8634	.2952	.7270	.5907
816	.9772	.4090	.8408	.2726	.7045	.1363	.5681	.9999	.4317	.8635	.2954	.7272	.5908
819	.9773	.4091	.8409	.2728	.7046	.1364	.5682	19.0000	.4319	.8637	.2955	.7273	.5910
822	.9774	.4092	.8411	.2729	.7047	.1365	.5683	.0002	.4320	.8638	.2956	.7275	.5911
431825	15.9775	16.4094	16.8412	17.2730	17.7048	18.1367	18.5685	19.0003	19.4321	19.8640	20.2958	20.7276	21.5913
828	.9776	.4095	.8413	.2731	.7049	.1368	.5686	.0004	.4323	.8641	.2959	.7277	.5914
831	.9777	.4096	.8414	.2732	.7051	.1369	.5687	.0006	.4324	.8642	.2961	.7279	.5916
834	.9779	.4097	.8415	.2734	.7052	.1370	.5689	.0007	.4325	.8644	.2962	.7280	.5917
837	.9780	.4098	.8416	.2735	.7053	.1372	.5690	.0008	.4327	.8645	.2963	.7282	.5919
431840	15.9781	16.4099	16.8418	17.2736	17.7054	18.1373	18.5691	19.0010	19.4328	19.8646	20.2965	20.7283	21.5920
843	.9782	.4100	.8419	.2737	.7056	.1374	.5692	.0011	.4329	.8648	.2966	.7285	.5922
846	.9783	.4101	.8420	.2738	.7057	.1375	.5694	.0012	.4331	.8649	.2968	.7286	.5923
849	.9784	.4103	.8421	.2740	.7058	.1377	.5695	.0014	.4332	.8651	.2969	.7288	.5925
852	.9785	.4104	.8422	.2741	.7059	.1378	.5696	.0015	.4333	.8652	.2970	.7289	.5926
431855	15.9786	16.4105	16.8423	17.2742	17.7061	18.1379	18.5698	19.0016	19.4335	19.8653	20.2972	20.7290	21.5928
858	.9787	.4106	.8425	.2743	.7062	.1380	.5699	.0018	.4336	.8655	.2973	.7292	.5929
861	.9789	.4107	.8426	.2744	.7063	.1382	.5700	.0019	.4337	.8656	.2975	.7293	.5931
864	.9790	.4108	.8427	.2746	.7064	.1383	.5702	.0020	.4339	.8657	.2976	.7295	.5932
867	.9791	.4109	.8428	.2747	.7065	.1384	.5703	.0021	.4340	.8659	.2977	.7296	.5934
431870	15.9792	16.4111	16.8429	17.2748	17.7067	18.1385	18.5704	19.0023	19.4342	19.8660	20.2979	20.7298	21.5935
873	.9793	.4112	.8430	.2749	.7068	.1387	.5705	.0024	.4343	.8662	.2980	.7299	.5937
876	.9794	.4113	.8432	.2750	.7069	.1388	.5707	.0025	.4344	.8663	.2982	.7300	.5938
879	.9795	.4114	.8433	.2752	.7070	.1389	.5708	.0027	.4346	.8664	.2983	.7302	.5940
882	.9796	.4115	.8434	.2753	.7072	.1390	.5709	.0028	.4347	.8666	.2985	.7303	.5941
431885	15.9797	16.4116	16.8435	17.2754	17.7073	18.1392	18.5711	19.0029	19.4348	19.8667	20.2986	20.7305	21.5943
888	.9799	.4117	.8436	.2755	.7074	.1393	.5712	.0031	.4350	.8668	.2987	.7306	.5944
891	.9800	.4119	.8437	.2756	.7075	.1394	.5713	.0032	.4351	.8670	.2989	.7308	.5946
894	.9801	.4120	.8439	.2758	.7077	.1395	.5714	.0033	.4352	.8671	.2990	.7309	.5947
897	.9802	.4121	.8440	.2759	.7078	.1397	.5716	.0035	.4354	.8673	.2992	.7311	.5949
431900	15.9803	16.4122	16.8441	17.2760	17.7079	18.1398	18.5717	19.0036	19.4355	19.8674	20.2993	20.7312	21.5950

MEGACYCLES PER SECOND

HARMONICS

BASIC FREQ.	24	25	26	27	28	29	30	31	32	33	34	35	36
431900	10.3656	10.7975	11.2294	11.6613	12.0932	12.5251	12.9570	13.3889	13.8208	14.2527	14.6846	15.1165	15.5484
903	.3657	.7976	.2295	.6614	.0933	.5252	.9571	.3890	.8209	.2528	.6847	.1166	.5485
906	.3657	.7977	.2296	.6615	.0934	.5253	.9572	.3891	.8210	.2529	.6848	.1167	.5486
909	.3658	.7977	.2296	.6615	.0935	.5254	.9573	.3892	.8211	.2530	.6849	.1168	.5487
912	.3659	.7978	.2297	.6616	.0935	.5254	.9574	.3893	.8212	.2531	.6850	.1169	.5488
431915	10.3660	10.7979	11.2298	11.6617	12.0936	12.5255	12.9575	13.3894	13.8213	14.2532	14.6851	15.1170	15.5489
918	.3660	.7980	.2299	.6618	.0937	.5256	.9575	.3895	.8214	.2533	.6852	.1171	.5490
921	.3661	.7980	.2299	.6619	.0938	.5257	.9576	.3896	.8215	.2534	.6853	.1172	.5492
924	.3662	.7981	.2300	.6619	.0939	.5258	.9577	.3896	.8216	.2535	.6854	.1173	.5493
927	.3662	.7982	.2301	.6620	.0940	.5259	.9578	.3897	.8217	.2536	.6855	.1174	.5494
431930	10.3663	10.7983	11.2302	11.6621	12.0940	12.5260	12.9579	13.3898	13.8218	14.2537	14.6856	15.1176	15.5495
933	.3664	.7983	.2303	.6622	.0941	.5261	.9580	.3899	.8219	.2538	.6857	.1177	.5496
936	.3665	.7984	.2303	.6623	.0942	.5261	.9581	.3900	.8220	.2539	.6858	.1178	.5497
939	.3665	.7985	.2304	.6624	.0943	.5262	.9582	.3901	.8220	.2540	.6859	.1179	.5498
942	.3666	.7986	.2305	.6624	.0944	.5263	.9583	.3902	.8221	.2541	.6860	.1180	.5499
431945	10.3667	10.7986	11.2306	11.6625	12.0945	12.5264	12.9584	13.3903	13.8222	14.2542	14.6861	15.1181	15.5500
948	.3668	.7987	.2306	.6626	.0945	.5265	.9584	.3904	.8223	.2543	.6862	.1182	.5501
951	.3668	.7988	.2307	.6627	.0946	.5266	.9585	.3905	.8224	.2544	.6863	.1183	.5502
954	.3669	.7989	.2308	.6628	.0947	.5267	.9586	.3906	.8225	.2545	.6864	.1184	.5503
957	.3670	.7989	.2309	.6628	.0948	.5268	.9587	.3907	.8226	.2546	.6865	.1185	.5505
431960	10.3670	10.7990	11.2310	11.6629	12.0949	12.5268	12.9588	13.3908	13.8227	14.2547	14.6866	15.1186	15.5506
963	.3671	.7991	.2310	.6630	.0950	.5269	.9589	.3909	.8228	.2548	.6867	.1187	.5507
966	.3672	.7992	.2311	.6631	.0950	.5270	.9590	.3909	.8229	.2549	.6868	.1188	.5508
969	.3673	.7992	.2312	.6632	.0951	.5271	.9591	.3910	.8230	.2550	.6869	.1189	.5509
972	.3673	.7993	.2313	.6632	.0952	.5272	.9592	.3911	.8231	.2551	.6870	.1190	.5510
431975	10.3674	10.7994	11.2314	11.6633	12.0953	12.5273	12.9593	13.3912	13.8232	14.2552	14.6872	15.1191	15.5511
978	.3675	.7995	.2314	.6634	.0954	.5274	.9593	.3913	.8233	.2553	.6873	.1192	.5512
981	.3675	.7995	.2315	.6635	.0955	.5274	.9594	.3914	.8234	.2554	.6874	.1193	.5513
984	.3676	.7996	.2316	.6636	.0956	.5275	.9595	.3915	.8235	.2555	.6875	.1194	.5514
987	.3677	.7997	.2317	.6636	.0956	.5276	.9596	.3916	.8236	.2556	.6876	.1195	.5515
431990	10.3678	10.7998	11.2317	11.6637	12.0957	12.5277	12.9597	13.3917	13.8237	14.2557	14.6877	15.1197	15.5516
993	.3678	.7998	.2318	.6638	.0958	.5278	.9598	.3918	.8238	.2558	.6878	.1198	.5517
996	.3679	.7999	.2319	.6639	.0959	.5279	.9599	.3919	.8239	.2559	.6879	.1199	.5519
999	.3680	.8000	.2320	.6640	.0960	.5280	.9600	.3920	.8240	.2560	.6880	.1200	.5520
432002	.3680	.8001	.2321	.6641	.0961	.5281	.9601	.3921	.8241	.2561	.6881	.1201	.5521
432005	10.3681	10.8001	11.2321	11.6641	12.0961	12.5281	12.9602	13.3922	13.8242	14.2562	14.6882	15.1202	15.5522
008	.3682	.8002	.2322	.6642	.0962	.5282	.9602	.3922	.8243	.2563	.6883	.1203	.5523
011	.3683	.8003	.2323	.6643	.0963	.5283	.9603	.3923	.8244	.2564	.6884	.1204	.5524
014	.3683	.8004	.2324	.6644	.0964	.5284	.9604	.3924	.8224	.2565	.6885	.1205	.5525
017	.3684	.8004	.2324	.6645	.0965	.5285	.9605	.3925	.8245	.2566	.6886	.1206	.5526
432020	10.3685	10.8005	11.2325	11.6645	12.0966	12.5286	12.9606	13.3926	13.8246	14.2567	14.6887	15.1207	15.5527
023	.3686	.8006	.2326	.6646	.0966	.5287	.9607	.3927	.8247	.2568	.6888	.1208	.5528
026	.3686	.8007	.2327	.6647	.0967	.5288	.9608	.3928	.8248	.2569	.6889	.1209	.5529
029	.3687	.8007	.2328	.6648	.0968	.5288	.9609	.3929	.8249	.2570	.6890	.1210	.5530
032	.3688	.8008	.2328	.6649	.0969	.5289	.9610	.3930	.8250	.2571	.6891	.1211	.5532
432035	10.3688	10.8009	11.2329	11.6649	12.0970	12.5290	12.9611	13.3931	13.8251	14.2572	14.6892	15.1212	15.5533
038	.3689	.8010	.2330	.6650	.0971	.5291	.9611	.3932	.8252	.2573	.6893	.1213	.5534
041	.3690	.8010	.2331	.6651	.0971	.5292	.9612	.2933	.8253	.2574	.6894	.1214	.5535
044	.3691	.8011	.2331	.6652	.0972	.5293	.9613	.3934	.8254	.2575	.6895	.1215	.5536
047	.3691	.8012	.2332	.6653	.0973	.5294	.9614	.3935	.8255	.2576	.6896	.1216	.5537
432050	10.3692	10.8013	11.2333	11.6654	12.0974	12.5295	12.9615	13.3936	13.8256	14.2577	14.6897	15.1218	15.5538
053	.3693	.8013	.2334	.6654	.0975	.5295	.9616	.3936	.8257	.2577	.6898	.1219	.5539
056	.3693	.8014	.2335	.6655	.0976	.5296	.9617	.3937	.8258	.2578	.6899	.1220	.5540
059	.3694	.8015	.2335	.6656	.0977	.5297	.9618	.3938	.8259	.2579	.6900	.1221	.5541
062	.3695	.8016	.2336	.6657	.0977	.5298	.9619	.3939	.8260	.2580	.6901	.1222	.5542
432065	10.3696	10.8016	11.2337	11.6658	12.0978	12.5299	12.9620	13.3940	13.8261	14.2581	14.6902	15.1223	15.5543
068	.3696	.8017	.2338	.6658	.0979	.5300	.9620	.3941	.8262	.2582	.6903	.1224	.5544
071	.3697	.8018	.2338	.6659	.0980	.5301	.9621	.3942	.8263	.2583	.6904	.1225	.5546
074	.3698	.8019	.2339	.6660	.0981	.5301	.9622	.3943	.8264	.2584	.6905	.1226	.5547
077	.3698	.8019	.2340	.6661	.0982	.5302	.9623	.3944	.8265	.2585	.6906	.1227	.5548
432080	10.3699	10.8020	11.2341	11.6662	12.0982	12.5303	12.9624	13.3945	13.8266	14.2586	14.6907	15.1228	15.5549
083	.3700	.8021	.2342	.6662	.0983	.5304	.9625	.3946	.8267	.2587	.6908	.1229	.5550
086	.3701	.8022	.2342	.6663	.0984	.5305	.9626	.3947	.8268	.2588	.6909	.1230	.5551
089	.3701	.8022	.2343	.6664	.0985	.5306	.9627	.3948	.8268	.2589	.6910	.1231	.5552
092	.3702	.8023	.2344	.6665	.0986	.5307	.9628	.3949	.8269	.2590	.6911	.1232	.5553
432095	10.3703	10.8024	11.2345	11.6666	12.0987	12.5308	12.9629	13.3949	13.8270	14.2591	14.6912	15.1233	15.5554
098	.3704	.8025	.2345	.6666	.0987	.5308	.9629	.3950	.8271	.2592	.6913	.1234	.5555
101	.3704	.8025	.2346	.6667	.0988	.5309	.9630	.3951	.8272	.2593	.6914	.1235	.5556
104	.3705	.8026	.2347	.6668	.0989	.5310	.9631	.3952	.8273	.2594	.6915	.1236	.5557
107	.3706	.8027	.2348	.6669	.0990	.5311	.9632	.3953	.8274	.2595	.6916	.1237	.5559
432110	10.3706	10.8028	11.2349	11.6670	12.0991	12.5312	12.9633	13.3954	13.8275	14.2596	14.6917	15.1239	15.5560
113	.3707	.8028	.2349	.6671	.0992	.5313	.9634	.3955	.8276	.2597	.6918	.1240	.5561
116	.3708	.8029	.2350	.6671	.0992	.5314	.9635	.3956	.8277	.2598	.6919	.1241	.5562
119	.3709	.8030	.2351	.6672	.0993	.5315	.9636	.3957	.8278	.2599	.6920	.1242	.5563
122	.3709	.8031	.2352	.6673	.0994	.5315	.9637	.3958	.8279	.2600	.6921	.1243	.5564
432125	10.3710	10.8031	11.2353	11.6674	12.0995	12.5316	12.9638	13.3959	13.8280	14.2601	14.6923	15.1244	15.5565
128	.3711	.8032	.2353	.6675	.0996	.5317	.9638	.3960	.8281	.2602	.6924	.1245	.5566
131	.3711	.8033	.2354	.6675	.0997	.5318	.9639	.3961	.8282	.2603	.6925	.1246	.5567
134	.3712	.8034	.2355	.6676	.0998	.5319	.9640	.3962	.8283	.2604	.6926	.1247	.5568
137	.3713	.8034	.2356	.6677	.0998	.5320	.9641	.3962	.8284	.2605	.6927	.1248	.5569
432140	10.3714	10.8035	11.2356	11.6678	12.0999	12.5321	12.9642	13.3963	13.8285	14.2606	14.6928	15.1249	15.5570
143	.3714	.8036	.2357	.6679	.1000	.5321	.9643	.3964	.8286	.2607	.6929	.1250	.5571
146	.3715	.8037	.2358	.6679	.1001	.5322	.9644	.3965	.8287	.2608	.6930	.1251	.5573
149	.3716	.8037	.2359	.6680	.1002	.5323	.9645	.3966	.8288	.2609	.6931	.1252	.5574
152	.3716	.8038	.2360	.6681	.1003	.5324	.9646	.3967	.8289	.2610	.6932	.1253	.5575
432155	10.3717	10.8039	11.2360	11.6682	12.1003	12.5325	12.9647	13.3968	13.8290	14.2611	14.6933	15.1254	15.5576
158	.3718	.8040	.2361	.6683	.1004	.5326	.9647	.3969	.8291	.2612	.6934	.1255	.5577
161	.3719	.8040	.2362	.6683	.1005	.5327	.9648	.3970	.8292	.2613	.6935	.1256	.5578
164	.3719	.8041	.2363	.6684	.1006	.5328	.9649	.3971	.8292	.2614	.6936	.1257	.5579
167	.3720	.8042	.2363	.6685	.1007	.5328	.9650	.3972	.8293	.2615	.6937	.1258	.5580
432170	10.3721	10.8043	11.2364	11.6686	12.1008	12.5329	12.9651	13.3973	13.8294	14.2616	14.6938	15.1260	15.5581
173	.3722	.8043	.2365	.6687	.1008	.5330	.9652	.3974	.8295	.2617	.6939	.1261	.5582
176	.3722	.8044	.2366	.6688	.1009	.5331	.9653	.3975	.8296	.2618	.6940	.1262	.5583
179	.3723	.8045	.2367	.6688	.1010	.5332	.9654	.3975	.8297	.2619	.6941	.1263	.5584
182	.3724	.8046	.2367	.6689	.1011	.5333	.9655	.3976	.8298	.2620	.6942	.1264	.5586
432185	10.3724	10.8046	11.2368	11.6690	12.1012	12.5334	12.9656	13.3977	13.8299	14.2621	14.6943	15.1265	15.5587
188	.3725	.8047	.2369	.6691	.1013	.5335	.9656	.3978	.8300	.2622	.6944	.1266	.5588
191	.3726	.8048	.2370	.6692	.1013	.5335	.9657	.3979	.8301	.2623	.6945	.1267	.5589
194	.3727	.8049	.2370	.6692	.1014	.5336	.9658	.3980	.8302	.2624	.6946	.1268	.5590
197	.3727	.8049	.2371	.6693	.1015	.5337	.9659	.3981	.8303	.2625	.6947	.1269	.5591
432200	10.3728	10.8050	11.2372	11.6694	12.1016	12.5338	12.9660	13.3982	13.8304	14.2626	14.6948	15.1270	15.5592

MEGACYCLES PER SECOND

HARMONICS

BASIC FREQ.	37	38	39	40	41	42	43	44	45	46	47	48	50
431900	15.9803	16.4122	16.8441	17.2760	17.7079	18.1398	18.5717	19.0036	19.4355	19.8674	20.2993	20.7312	21.5950
903	.9804	.4123	.8442	.2761	.7080	.1399	.5718	.0037	.4356	.8675	.2994	.7313	.5952
906	.9805	.4124	.8443	.2762	.7081	.1401	.5720	.0039	.4358	.8677	.2996	.7315	.5953
909	.9806	.4125	.8445	.2764	.7083	.1402	.5721	.0040	.4359	.8678	.2997	.7316	.5955
912	.9807	.4127	.8446	.2765	.7084	.1403	.5722	.0041	.4360	.8680	.2999	.7318	.5956
431915	15.9809	16.4128	16.8447	17.2766	17.7085	18.1404	18.5723	19.0043	19.4362	19.8681	20.3000	20.7319	21.5958
918	.9810	.4129	.8448	.2767	.7086	.1406	.5725	.0044	.4363	.8682	.3001	.7321	.5959
921	.9811	.4130	.8449	.2768	.7088	.1407	.5726	.0045	.5364	.8684	.3003	.7322	.5961
924	.9812	.4131	.8450	.2770	.7089	.1408	.5727	.0047	.4366	.8685	.3004	.7324	.5962
927	.9813	.4132	.8452	.2771	.7090	.1409	.5729	.0048	.4367	.8686	.3006	.7325	.5964
431930	15.9814	16.4133	16.8453	17.2772	17.7091	18.1411	18.5730	19.0049	19.4369	19.8688	20.3007	20.7326	21.5965
933	.9815	.4135	.8454	.2773	.7093	.1412	.5731	.0051	.4370	.8689	.3009	.7328	.5967
936	.9816	.4136	.8455	.2774	.7094	.1413	.5732	.0052	.4371	.8691	.3010	.7329	.5968
939	.9817	.4137	.8456	.2776	.7095	.1414	.5734	.0053	.4373	.8692	.3011	.7331	.5970
942	.9819	.4138	.8457	.2777	.7096	.1416	.5735	.0054	.4374	.8693	.3013	.7332	.5971
431945	15.9820	16.4139	16.8459	17.2778	17.7097	18.1417	18.5736	19.0056	19.4375	19.8695	20.3014	20.7334	21.5973
948	.9821	.4140	.8460	.2779	.7099	.1418	.5738	.0057	.4377	.8696	.3016	.7335	.5974
951	.9822	.4141	.8461	.2780	.7100	.1419	.5739	.0058	.4378	.8697	.3017	.7336	.5976
954	.9823	.4143	.8462	.2782	.7101	.1421	.5740	.0060	.4379	.8699	.3018	.7338	.5977
957	.9824	.4144	.8463	.2783	.7102	.1422	.5742	.0061	.4381	.8700	.3020	.7339	.5979
431960	15.9825	16.4145	16.8464	17.2784	17.7104	18.1423	18.5743	19.0062	19.4382	19.8702	20.3021	20.7341	21.5980
963	.9826	.4146	.8466	.2785	.7105	.1424	.5744	.0064	.4383	.8703	.3023	.7342	.5982
966	.9827	.4147	.8467	.2786	.7106	.1426	.5745	.0065	.4385	.8704	.3024	.7344	.5983
969	.9829	.4148	.8468	.2788	.7107	.1427	.5747	.0066	.4386	.8706	.3025	.7345	.5985
972	.9830	.4149	.8469	.2789	.7109	.1428	.5748	.0068	.4387	.8707	.3027	.7347	.5986
431975	15.9831	16.4151	16.8470	17.2790	17.7110	18.1430	18.5749	19.0069	19.4389	19.8709	20.3028	20.7348	21.5988
978	.9832	.4152	.8471	.2791	.7111	.1431	.5751	.0070	.4390	.8710	.3030	.7349	.5989
981	.9833	.4153	.8473	.2792	.7112	.1432	.5752	.0072	.4391	.8711	.3031	.7351	.5991
984	.9834	.4154	.8474	.2794	.7113	.1433	.5753	.0073	.4393	.8713	.3032	.7352	.5992
987	.9835	.4155	.8475	.2795	.7115	.1435	.5754	.0074	.4394	.8714	.3034	.7354	.5994
431990	15.9836	16.4156	16.8476	17.2796	17.7116	18.1436	18.5756	19.0076	19.4396	19.8715	20.3035	20.7355	21.5995
993	.9837	.4157	.8477	.2797	.7117	.1437	.5757	.0077	.4397	.8717	.3037	.7357	.5997
996	.9839	.4158	.8478	.2798	.7118	.1438	.5758	.0078	.4398	.8718	.3038	.7358	.5998
999	.9840	.4160	.8480	.2800	.7120	.1440	.5760	.0080	.4400	.8720	.3040	.7360	.6000
432002	.9841	.4161	.8481	.2801	.7121	.1441	.5761	.0081	.4401	.8721	.3041	.7361	.6001
432005	15.9842	16.4162	16.8482	17.2802	17.7122	18.1442	18.5762	19.0082	19.4402	19.8722	20.3042	20.7362	21.6003
008	.9843	.4163	.8483	.2803	.7123	.1443	.5763	.0084	.4404	.8724	.3044	.7364	.6004
011	.9844	.4164	.8484	.2804	.7125	.1445	.5765	.0085	.4405	.8725	.3045	.7365	.6006
014	.9845	.4165	.8485	.2806	.7126	.1446	.5766	.0086	.4406	.8726	.3047	.7367	.6007
017	.9846	.4166	.8487	.2807	.7127	.1447	.5767	.0087	.4408	.8728	.3048	.7368	.6009
432020	15.9847	16.4168	16.8488	17.2808	17.7128	18.1448	18.5769	19.0089	19.4409	19.8729	20.3049	20.7370	21.6010
023	.9849	.4169	.8489	.2809	.7129	.1450	.5770	.0090	.4410	.8731	.3051	.7371	.6012
026	.9850	.4170	.8490	.2810	.7131	.1451	.5771	.0091	.4412	.8732	.3052	.7372	.6013
029	.9851	.4171	.8491	.2812	.7132	.1452	.5772	.0093	.4413	.8733	.3054	.7374	.6015
032	.9852	.4172	.8492	.2813	.7133	.1453	.5774	.0094	.4414	.8735	.3055	.7375	.6016
432035	15.9853	16.4173	16.8494	17.2814	17.7134	18.1455	18.5775	19.0095	19.4416	19.8736	20.3056	20.7377	21.6018
038	.9854	.4174	.8495	.2815	.7136	.1456	.5776	.0097	.4417	.8737	.3058	.7378	.6019
041	.9855	.4176	.8496	.2816	.7137	.1457	.5778	.0098	.4418	.8739	.3059	.7380	.6021
044	.9856	.4177	.8497	.2818	.7138	.1458	.5779	.0099	.4420	.8740	.3061	.7381	.6022
047	.9857	.4178	.8498	.2819	.7139	.1460	.5780	.0101	.4421	.8742	.3062	.7383	.6024
432050	15.9859	16.4179	16.8500	17.2820	17.7141	18.1461	18.5782	19.0102	19.4423	19.8743	20.3064	20.7384	21.6025
053	.9860	.4180	.8501	.2821	.7142	.1462	.5783	.0103	.4424	.8744	.3065	.7385	.6027
056	.9861	.4181	.8502	.2822	.7143	.1464	.5784	.0105	.4425	.8746	.3066	.7387	.6028
059	.9862	.4182	.8503	.2824	.7144	.1465	.5785	.0106	.4427	.8747	.3068	.7388	.6030
062	.9863	.4184	.8504	.2825	.7145	.1466	.5787	.0107	.4428	.8749	.3069	.7390	.6031
432065	15.9864	16.4185	16.8505	17.2826	17.7147	18.1467	18.5788	19.0109	19.4429	19.8750	20.3071	20.7391	21.6033
068	.9865	.4186	.8507	.2827	.7148	.1469	.5789	.0110	.4431	.8751	.3072	.7393	.6034
071	.9866	.4187	.8508	.2828	.7149	.1470	.5791	.0111	.4432	.8753	.3073	.7394	.6036
074	.9867	.4188	.8509	.2830	.7150	.1471	.5792	.0113	.4433	.8754	.3075	.7396	.6037
077	.9868	.4189	.8510	.2831	.7152	.1472	.5793	.0114	.4435	.8755	.3076	.7397	.6039
432080	15.9870	16.4190	16.8511	17.2832	17.7153	18.1474	18.5794	19.0115	19.4436	19.8757	20.3078	20.7398	21.6040
083	.9871	.4192	.8512	.2833	.7154	.1475	.5796	.0117	.4437	.8758	.3079	.7400	.6042
086	.9872	.4193	.8514	.2834	.7155	.1476	.5797	.0118	.4439	.8760	.3080	.7401	.6043
089	.9873	.4194	.8515	.2836	.7156	.1477	.5798	.0119	.4440	.8761	.3082	.7403	.6045
092	.9874	.4195	.8516	.2837	.7158	.1479	.5800	.0120	.4441	.8762	.3083	.7404	.6046
432095	15.9875	16.4196	16.8517	17.2838	17.7159	18.1480	18.5801	19.0122	19.4443	19.8764	20.3085	20.7406	21.6048
098	.9876	.4197	.8518	.2839	.7160	.1481	.5802	.0123	.4444	.8765	.3086	.7407	.6049
101	.9877	.4198	.8519	.2840	.7161	.1482	.5803	.0124	.4445	.8766	.3087	.7408	.6051
104	.9878	.4200	.8521	.2842	.7163	.1484	.5805	.0126	.4447	.8768	.3089	.7410	.6052
107	.9880	.4201	.8522	.2843	.7164	.1485	.5806	.0127	.4448	.8769	.3090	.7411	.6054
432110	15.9881	16.4202	16.8523	17.2844	17.7165	18.1486	18.5807	19.0128	19.4450	19.8771	20.3092	20.7413	21.6055
113	.9882	.4203	.8524	.2845	.7166	.1487	.5809	.0130	.4451	.8772	.3093	.7414	.6057
116	.9883	.4204	.8525	.2846	.7168	.1489	.5810	.0131	.4452	.8773	.3095	.7416	.6058
119	.9884	.4205	.8526	.2848	.7169	.1490	.5811	.0132	.4454	.8775	.3096	.7417	.6060
122	.9885	.4206	.8528	.2849	.7170	.1491	.5812	.0134	.4455	.8776	.3097	.7419	.6061
432125	15.9886	16.4208	16.8529	17.2850	17.7171	18.1493	18.5814	19.0135	19.4456	19.8778	20.3099	20.7420	21.6063
128	.9887	.4209	.8530	.2851	.7172	.1494	.5815	.0136	.4458	.8779	.3100	.7421	.6064
131	.9888	.4210	.8531	.2852	.7174	.1495	.5816	.0138	.4459	.8780	.3102	.7423	.6066
134	.9890	.4211	.8532	.2854	.7175	.1496	.5818	.0139	.4460	.8782	.3103	.7424	.6067
137	.9891	.4212	.8533	.2855	.7176	.1498	.5819	.0140	.4462	.8783	.3104	.7426	.6069
432140	15.9892	16.4213	16.8535	17.2856	17.7177	18.1499	18.5820	19.0142	19.4463	19.8784	20.3106	20.7427	21.6070
143	.9893	.4214	.8536	.2857	.7179	.1500	.5821	.0143	.4464	.8786	.3107	.7429	.6072
146	.9894	.4215	.8537	.2858	.7180	.1501	.5823	.0144	.4466	.8787	.3109	.7430	.6073
149	.9895	.4217	.8538	.2860	.7181	.1503	.5824	.0146	.4467	.8789	.3110	.7432	.6075
152	.9896	.4218	.8539	.2861	.7182	.1504	.5825	.0147	.4468	.8790	.3111	.7433	.6076
432155	15.9897	16.4219	16.8540	17.2862	17.7184	18.1505	18.5827	19.0148	19.4470	19.8791	20.3113	20.7434	21.6078
158	.9898	.4220	.8542	.2863	.7185	.1506	.5828	.0150	.4471	.8793	.3114	.7436	.6079
161	.9900	.4221	.8543	.2864	.7186	.1508	.5829	.0151	.4472	.8794	.3116	.7437	.6081
164	.9901	.4222	.8544	.2866	.7187	.1509	.5831	.0152	.4474	.8795	.3117	.7439	.6082
167	.9902	.4223	.8545	.2867	.7188	.1510	.5832	.0153	.4475	.8797	.3118	.7440	.6084
432170	15.9903	16.4225	16.8546	17.2868	17.7190	18.1511	18.5833	19.0155	19.4477	19.8798	20.3120	20.7442	21.6085
173	.9904	.4226	.8547	.2869	.7191	.1513	.5834	.0156	.4478	.8800	.3121	.7443	.6087
176	.9905	.4227	.8549	.2870	.7192	.1514	.5836	.0157	.4479	.8801	.3123	.7444	.6088
179	.9906	.4228	.8550	.2872	.7193	.1515	.5837	.0159	.4481	.8802	.3124	.7446	.6090
182	.9907	.4229	.8551	.2873	.7195	.1516	.5838	.0160	.4482	.8804	.3126	.7447	.6091
432185	15.9908	16.4230	16.8552	17.2874	17.7196	18.1518	18.5840	19.0161	19.4483	19.8805	20.3127	20.7449	21.6093
188	.9910	.4231	.8553	.2875	.7197	.1519	.5841	.0163	.4485	.8806	.3128	.7450	.6094
191	.9911	.4233	.8554	.2876	.7198	.1520	.5842	.0164	.4486	.8808	.3130	.7452	.6096
194	.9912	.4234	.8556	.2878	.7200	.1521	.5843	.0165	.4487	.8809	.3131	.7453	.6097
197	.9913	.4235	.8557	.2879	.7201	.1523	.5845	.0167	.4489	.8811	.3133	.7455	.6099
432200	15.9914	16.4236	16.8558	17.2880	17.7202	18.1524	18.5846	19.0168	19.4490	19.8812	20.3134	20.7456	21.6100

MEGACYCLES PER SECOND

H A R M O N I C S

BASIC FREQ.	24	25	26	27	28	29	30	31	32	33	34	35	36
432200	10.3728	10.8050	11.2372	11.6694	12.1016	12.5338	12.9660	13.3982	13.8304	14.2626	14.6948	15.1270	15.5592
203	.3729	.8051	.2373	.6695	.1017	.5339	.9661	.3983	.8305	.2627	.6949	.1271	.5593
206	.3729	.8052	.2374	.6696	.1018	.5340	.9662	.3984	.8306	.2628	.6950	.1272	.5594
209	.3730	.8052	.2374	.6696	.1019	.5341	.9663	.3985	.8307	.2629	.6951	.1273	.5595
212	.3731	.8053	.2375	.6697	.1019	.5341	.9664	.3986	.8308	.2630	.6952	.1274	.5596
432215	10.3732	10.8054	11.2376	11.6698	12.1020	12.5342	12.9665	13.3987	13.8309	14.2631	14.6953	15.1275	15.5597
218	.3732	.8055	.2377	.6699	.1021	.5343	.9665	.3988	.8310	.2632	.6954	.1276	.5598
221	.3733	.8055	.2377	.6700	.1022	.5344	.9666	.3989	.8311	.2633	.6955	.1277	.5600
224	.3734	.8056	.2378	.6700	.1023	.5345	.9667	.3989	.8312	.2634	.6956	.1278	.5601
227	.3734	.8057	.2379	.6701	.1024	.5346	.9668	.3990	.8313	.2635	.6957	.1279	.5602
432230	10.3735	10.8058	11.2380	11.6702	12.1024	12.5347	12.9669	13.3991	13.8314	14.2636	14.6958	15.1281	15.5603
233	.3736	.8058	.2381	.6703	.1025	.5348	.9670	.3992	.8315	.2637	.6959	.1282	.5604
236	.3737	.8059	.2381	.6704	.1026	.5348	.9671	.3993	.8316	.2638	.6960	.1283	.5605
239	.3737	.8060	.2382	.6705	.1027	.5349	.9672	.3994	.8316	.2639	.6961	.1284	.5606
242	.3738	.8061	.2383	.6705	.1028	.5350	.9673	.3995	.8317	.2640	.6962	.1285	.5607
432245	10.3739	10.8061	11.2384	11.6706	12.1029	12.5351	12.9674	13.3996	13.8318	14.2641	14.6963	15.1286	15.5608
248	.3740	.8062	.2384	.6707	.1029	.5352	.9674	.3997	.8319	.2642	.6964	.1287	.5609
251	.3740	.8063	.2385	.6708	.1030	.5353	.9675	.3998	.8320	.3643	.6965	.1288	.5610
254	.3741	.8064	.2386	.6709	.1031	.5354	.9676	.3999	.8321	.2644	.6966	.1289	.5611
257	.3742	.8064	.2387	.6709	.1032	.5355	.9677	.4000	.8322	.2645	.6967	.1290	.5613
432260	10.3742	10.8065	11.2388	11.6710	12.1033	12.5355	12.9678	13.4001	13.8323	14.2646	14.6968	15.1291	15.5614
263	.3743	.8066	.2388	.6711	.1034	.5356	.9679	.4002	.8324	.2647	.6969	.1292	.5615
266	.3744	.8067	.2389	.6712	.1034	.5357	.9680	.4002	.8325	.2648	.6970	.1293	.5616
269	.3745	.8067	.2390	.6713	.1035	.5358	.9681	.4003	.8326	.2649	.6971	.1294	.5617
272	.3745	.8068	.2391	.6713	.1036	.5359	.9682	.4004	.8327	.2650	.6972	.1295	.5618
432275	10.3746	10.8069	11.2392	11.6714	12.1037	12.5360	12.9683	13.4005	13.8328	14.2651	14.6974	15.1296	15.5619
278	.3747	.8070	.2392	.6715	.1038	.5361	.9683	.4006	.8329	.2652	.6975	.1297	.5620
281	.3747	.8070	.2393	.6716	.1039	.5361	.9684	.4007	.8330	.2653	.6976	.1298	.5621
284	.3748	.8071	.2394	.6717	.1040	.5362	.9685	.4008	.8331	.2654	.6977	.1299	.5622
287	.3749	.8072	.2395	.6717	.1040	.5363	.9686	.4009	.8332	.2655	.6978	.1300	.5623
432290	10.3750	10.8073	11.2395	11.6718	12.1041	12.5364	12.9687	13.4010	13.8333	14.2656	14.6979	15.1302	15.5624
293	.3750	.8073	.2396	.6719	.1042	.5365	.9688	.4011	.8334	.2657	.6980	.1303	.5625
296	.3751	.8074	.2397	.6720	.1043	.5366	.9689	.4012	.8335	.2658	.6981	.1304	.5627
299	.3752	.8075	.2398	.6721	.1044	.5367	.9690	.4013	.8336	.2659	.6982	.1305	.5628
302	.3752	.8076	.2399	.6722	.1045	.5368	.9691	.4014	.8337	.2660	.6983	.1306	.5629
432305	10.3753	10.8076	11.2399	11.6722	12.1045	12.5368	12.9692	13.4015	13.8338	14.2661	14.6984	15.1307	15.5630
308	.3754	.8077	.2400	.6723	.1046	.5369	.9692	.4015	.8339	.2662	.6985	.1308	.5631
311	.3755	.8078	.2401	.6724	.1047	.5370	.9693	.4016	.8340	.2663	.6986	.1309	.5632
314	.3755	.8079	.2402	.6725	.1048	.5371	.9694	.4017	.8340	.2664	.6987	.1310	.5633
317	.3756	.8079	.2402	.6726	.1049	.5372	.9695	.4018	.8341	.2665	.6988	.1311	.5634
432320	10.3757	10.8080	11.2403	11.6726	12.1050	12.5373	12.9696	13.4019	13.8342	14.2666	14.6989	15.1312	15.5635
323	.3758	.8081	.2404	.6727	.1050	.5374	.9697	.4020	.8343	.2667	.6990	.1313	.5636
326	.3758	.8082	.2405	.6728	.1051	.5375	.9698	.4021	.8344	.2668	.6991	.1314	.5637
329	.3759	.8082	.2406	.6729	.1052	.5375	.9699	.4022	.8345	.2669	.6992	.1315	.5638
332	.3760	.8083	.2406	.6730	.1053	.5376	.9700	.4023	.8346	.2670	.6993	.1316	.5640
432335	10.3760	10.8084	11.2407	11.6730	12.1054	12.5377	12.9701	13.4024	13.8347	14.2671	14.6994	15.1317	15.5641
338	.3761	.8085	.2408	.6731	.1055	.5378	.9701	.4025	.8348	.2672	.6995	.1318	.5642
341	.3762	.8085	.2409	.6732	.1055	.5379	.9702	.4026	.8349	.2673	.6996	.1319	.5643
344	.3763	.8086	.2409	.6733	.1056	.5380	.9703	.4027	.8350	.2674	.6997	.1320	.5644
347	.3763	.8087	.2410	.6734	.1057	.5381	.9704	.4028	.8351	.2675	.6998	.1321	.5645
432350	10.3764	10.8088	11.2411	11.6735	12.1058	12.5382	12.9705	13.4029	13.8352	14.2676	14.6999	15.1323	15.5646
353	.3765	.8088	.2412	.6735	.1059	.5382	.9706	.4029	.8353	.2676	.7000	.1324	.5647
356	.3765	.8089	.2413	.6736	.1060	.5383	.9707	.4030	.8354	.2677	.7001	.1325	.5648
359	.3766	.8090	.2413	.6737	.1061	.5384	.9708	.4031	.8355	.2678	.7002	.1326	.5649
362	.3767	.8091	.2414	.6738	.1061	.5385	.9709	.4032	.8356	.2679	.7003	.1327	.5650
432365	10.3768	10.8091	11.2415	11.6739	12.1062	12.5386	12.9710	13.4033	13.8357	14.2680	14.7004	15.1328	15.5651
368	.3768	.8092	.2416	.6739	.1063	.5387	.9710	.4034	.8358	.2681	.7005	.1329	.5652
371	.3769	.8093	.2416	.6740	.1064	.5388	.9711	.4035	.8359	.2682	.7006	.1330	.5654
374	.3770	.8094	.2417	.6741	.1065	.5388	.9712	.4036	.8360	.2683	.7007	.1331	.5655
377	.3770	.8094	.2418	.6742	.1066	.5389	.9713	.4037	.8361	.2684	.7008	.1332	.5656
432380	10.3771	10.8095	11.2419	11.6743	12.1066	12.5390	12.9714	13.4038	13.8362	14.2685	14.7009	15.1333	15.5657
383	.3772	.8096	.2420	.6743	.1067	.5391	.9715	.4039	.8363	.2686	.7010	.1334	.5658
386	.3773	.8097	.2420	.6744	.1068	.5392	.9716	.4040	.8364	.2687	.7011	.1335	.5659
389	.3773	.8097	.2421	.6745	.1069	.5393	.9717	.4041	.8364	.2688	.7012	.1336	.5660
392	.3774	.8098	.2422	.6746	.1070	.5394	.9718	.4042	.8365	.2689	.7013	.1337	.5661
432395	10.3775	10.8099	11.2423	11.6747	12.1071	12.5395	12.9719	13.4042	13.8366	14.2690	14.7014	15.1338	15.5662
398	.3776	.8100	.2423	.6747	.1071	.5395	.9719	.4043	.8367	.2691	.7015	.1339	.5663
401	.3776	.8100	.2424	.6748	.1072	.5396	.9720	.4044	.8368	.2692	.7016	.1340	.5664
404	.3777	.8101	.2425	.6749	.1073	.5397	.9721	.4045	.8369	.2693	.7017	.1341	.5665
407	.3778	.8102	.2426	.6750	.1074	.5398	.9722	.4046	.8370	.2694	.7018	.1342	.5667
432410	10.3778	10.8103	11.2427	11.6751	12.1075	12.5399	12.9723	13.4047	13.8371	14.2695	14.7019	15.1344	15.5668
413	.3779	.8103	.2427	.6752	.1076	.5400	.9724	.4048	.8372	.2696	.7020	.1345	.5669
416	.3780	.8104	.2428	.6752	.1076	.5401	.9725	.4049	.8373	.2697	.7021	.1346	.5670
419	.3781	.8105	.2429	.6753	.1077	.5402	.9726	.4050	.8374	.2698	.7022	.1347	.5671
422	.3781	.8106	.2430	.6754	.1078	.5402	.9727	.4051	.8375	.2699	.7023	.1348	.5672
432425	10.3782	10.8106	11.2431	11.6755	12.1079	12.5403	12.9728	13.4052	13.8376	14.2700	14.7025	15.1349	15.5673
428	.3783	.8107	.2431	.6756	.1080	.5404	.9728	.4053	.8377	.2701	.7026	.1350	.5674
431	.3783	.8108	.2432	.6756	.1081	.5405	.9729	.4054	.8378	.2702	.7027	.1351	.5675
434	.3784	.8109	.2433	.6757	.1082	.5406	.9730	.4055	.8379	.2703	.7028	.1352	.5676
437	.3785	.8109	.2434	.6758	.1082	.5407	.9731	.4055	.8380	.2704	.7029	.1353	.5677
432440	10.3786	10.8110	11.2434	11.6759	12.1083	12.5408	12.9732	13.4056	13.8381	14.2705	14.7030	15.1354	15.5678
443	.3786	.8111	.2435	.6760	.1084	.5408	.9733	.4057	.8382	.2706	.7031	.1355	.5679
446	.3787	.8112	.2436	.6760	.1085	.5409	.9734	.4058	.8383	.2707	.7032	.1356	.5681
449	.3788	.8112	.2437	.6761	.1086	.5410	.9735	.4059	.8384	.2708	.7033	.1357	.5682
452	.3788	.8113	.2438	.6762	.1087	.5411	.9736	.4060	.8385	.2709	.7034	.1358	.5683
432455	10.3789	10.8114	11.2438	11.6763	12.1087	12.5412	12.9737	13.4061	13.8386	14.2710	14.7035	15.1359	15.5684
458	.3790	.8115	.2439	.6764	.1088	.5413	.9737	.4062	.8387	.2711	.7036	.1360	.5685
461	.3791	.8115	.2440	.6764	.1089	.5414	.9738	.4063	.8388	.2712	.7037	.1361	.5686
464	.3791	.8116	.2441	.6765	.1090	.5415	.9739	.4064	.8388	.2713	.7038	.1362	.5687
467	.3792	.8117	.2441	.6766	.1091	.5415	.9740	.4065	.8389	.2714	.7039	.1363	.5688
432470	10.3793	10.8118	11.2442	11.6767	12.1092	12.5416	12.9741	13.4066	13.8390	14.2715	14.7040	15.1365	15.5689
473	.3794	.8118	.2443	.6768	.1092	.5417	.9742	.4067	.8391	.2716	.7041	.1366	.5690
476	.3794	.8119	.2444	.6769	.1093	.5418	.9743	.4068	.8392	.2717	.7042	.1367	.5691
479	.3795	.8120	.2445	.6769	.1094	.5419	.9744	.4068	.8393	.2718	.7043	.1368	.5692
482	.3796	.8121	.2445	.6770	.1095	.5420	.9745	.4069	.8394	.2719	.7044	.1369	.5694
432485	10.3796	10.8121	11.2446	11.6771	12.1096	12.5421	12.9746	13.4070	13.8395	14.2720	14.7045	15.1370	15.5695
488	.3797	.8122	.2447	.6772	.1097	.5422	.9746	.4071	.8396	.2721	.7046	.1371	.5696
491	.3798	.8123	.2448	.6773	.1097	.5422	.9747	.4072	.8397	.2722	.7047	.1372	.5697
494	.3799	.8124	.2448	.6773	.1098	.5423	.9748	.4073	.8398	.2723	.7048	.1373	.5698
497	.3799	.8124	.2449	.6774	.1099	.5424	.9749	.4074	.8399	.2724	.7049	.1374	.5699
432500	10.3800	10.8125	11.2450	11.6775	12.1100	12.5425	12.9750	13.4075	13.8400	14.2725	14.7050	15.1375	15.5700

MEGACYCLES PER SECOND

H A R M O N I C S

BASIC FREQ.	37	38	39	40	41	42	43	44	45	46	47	48	50
432200	15.9914	16.4236	16.8558	17.2880	17.7202	18.1524	18.5846	19.0168	19.4490	19.8812	20.3134	20.7456	21.6100
203	.9915	.4237	.8559	.2881	.7203	.1525	.5847	.0169	.4491	.8813	.3135	.7457	.6102
206	.9916	.4238	.8560	.2882	.7204	.1527	.5849	.0171	.4493	.8815	.3137	.7459	.6103
209	.9917	.4239	.8562	.2884	.7206	.1528	.5850	.0172	.4494	.8816	.3138	.7460	.6105
212	.9918	.4241	.8563	.2885	.7207	.1529	.5851	.0173	.4495	.8818	.3140	.7462	.6106
432215	15.9920	16.4242	16.8564	17.2886	17.7208	18.1530	18.5852	19.0175	19.4497	19.8819	20.3141	20.7463	21.6108
218	.9921	.4243	.8565	.2887	.7209	.1532	.5854	.0176	.4498	.8820	.3142	.7465	.6109
221	.9922	.4244	.8566	.2888	.7211	.1533	.5855	.0177	.4499	.8822	.3144	.7466	.6111
224	.9923	.4245	.8567	.2890	.7212	.1534	.5856	.0179	.4501	.8823	.3145	.7468	.6112
227	.9924	.4246	.8569	.2891	.7213	.1535	.5858	.0180	.4502	.8824	.3147	.7469	.6114
432230	15.9925	16.4247	16.8570	17.2892	17.7214	18.1537	18.5859	19.0181	19.4504	19.8826	20.3148	20.7470	21.6115
233	.9926	.4249	.8571	.2893	.7216	.1538	.5860	.0183	.4505	.8827	.3150	.7472	.6117
236	.9927	.4250	.8572	.2894	.7217	.1539	.5861	.0184	.4506	.8829	.3151	.7473	.6118
239	.9928	.4251	.8573	.2896	.7218	.1540	.5863	.0185	.4508	.8830	.3152	.7475	.6120
242	.9930	.4252	.8574	.2897	.7219	.1542	.5864	.0186	.4509	.8831	.3154	.7476	.6121
432245	15.9931	16.4253	16.8576	17.2898	17.7220	18.1543	18.5865	19.0188	19.4510	19.8833	20.3155	20.7478	21.6123
248	.9932	.4254	.8577	.2899	.7222	.1544	.5867	.0189	.4512	.8834	.3157	.7479	.6124
251	.9933	.4255	.8578	.2900	.7223	.1545	.5868	.0190	.4513	.8835	.3158	.7480	.6126
254	.9934	.4257	.8579	.2902	.7224	.1547	.5869	.0192	.4514	.8837	.3159	.7482	.6127
257	.9935	.4258	.8580	.2903	.7225	.1548	.5871	.0193	.4516	.8838	.3161	.7483	.6129
432260	15.9936	16.4259	16.8581	17.2904	17.7227	18.1549	18.5872	19.0194	19.4517	19.8840	20.3162	20.7485	21.6130
263	.9937	.4260	.8583	.2905	.7228	.1550	.5873	.0196	.4518	.8841	.3164	.7486	.6132
266	.9938	.4261	.8584	.2906	.7229	.1552	.5874	.0197	.4520	.8842	.3165	.7488	.6133
269	.9940	.4262	.8585	.2908	.7230	.1553	.5876	.0198	.4521	.8844	.3166	.7489	.6135
272	.9941	.4263	.8586	.2909	.7232	.1554	.5877	.0200	.4522	.8845	.3168	.7491	.6136
432275	15.9942	16.4265	16.8587	17.2910	17.7233	18.1556	18.5878	19.0201	19.4524	19.8847	20.3169	20.7492	21.6138
278	.9943	.4266	.8588	.2911	.7234	.1557	.5880	.0202	.4525	.8848	.3171	.7493	.6139
281	.9944	.4267	.8590	.2912	.7235	.1558	.5881	.0204	.4526	.8849	.3172	.7495	.6141
284	.9945	.4268	.8591	.2914	.7236	.1559	.5882	.0205	.4528	.8851	.3173	.7496	.6142
287	.9946	.4269	.8592	.2915	.7238	.1561	.5883	.0206	.4529	.8852	.3175	.7498	.6144
432290	15.9947	16.4270	16.8593	17.2916	17.7239	18.1562	18.5885	19.0208	19.4531	19.8853	20.3176	20.7499	21.6145
293	.9948	.4271	.8594	.2917	.7240	.1563	.5886	.0209	.4532	.8855	.3178	.7501	.6147
296	.9950	.4272	.8595	.2918	.7241	.1564	.5887	.0210	.4533	.8856	.3179	.7502	.6148
299	.9951	.4274	.8597	.2920	.7243	.1566	.5889	.0212	.4535	.8858	.3181	.7504	.6150
302	.9952	.4275	.8598	.2921	.7244	.1567	.5890	.0213	.4536	.8859	.3182	.7505	.6151
432305	15.9953	16.4276	16.8599	17.2922	17.7245	18.1568	18.5891	19.0214	19.4537	19.8860	20.3183	20.7506	21.6153
308	.9954	.4277	.8600	.2923	.7246	.1569	.5892	.0216	.4539	.8862	.3185	.7508	.6154
311	.9955	.4278	.8601	.2924	.7248	.1571	.5894	.0217	.4540	.8863	.3186	.7509	.6156
314	.9956	.4279	.8602	.2926	.7249	.1572	.5895	.0218	.4541	.8864	.3188	.7511	.6157
377	.9957	.4280	.8604	.2927	.7250	.1573	.5896	.0219	.4543	.8866	.3189	.7512	.6159
432320	15.9958	16.4282	16.8605	17.2928	17.7251	18.1574	18.5898	19.0221	19.4544	19.8867	20.3190	20.7514	21.6160
323	.9960	.4283	.8606	.2929	.7252	.1576	.5899	.0222	.4545	.8869	.3192	.7515	.6162
326	.9961	.4284	.8607	.2930	.7254	.1577	.5900	.0223	.4547	.8870	.3193	.7516	.6163
329	.9962	.5285	.8608	.2932	.7255	.1578	.5901	.0225	.4548	.8871	.3195	.7518	.6165
332	.9963	.4286	.8609	.2933	.7256	.1579	.5903	.0226	.4549	.8873	.3196	.7519	.6166
432335	15.9964	16.4287	16.8611	17.2934	17.7257	18.1581	18.5904	19.0227	19.4551	19.8874	20.3197	20.7521	21.6168
338	.9965	.4288	.8612	.2935	.7259	.1582	.5905	.0229	.4552	.8875	.3199	.7522	.6169
341	.9966	.4290	.8613	.2936	.7260	.1583	.5907	.0230	.4553	.8877	.3200	.7524	.6171
344	.9967	.4291	.8614	.2938	.7261	.1584	.5908	.0231	.4555	.8878	.3202	.7525	.6172
347	.9968	.4292	.8615	.2939	.7262	.1586	.5909	.0233	.4556	.8880	.3203	.7527	.6174
432350	15.9970	16.4293	16.8617	17.2940	17.7264	18.1587	18.5911	19.0234	19.4558	19.8881	20.3205	20.7528	21.6175
353	.9971	.4294	.8618	.2941	.7265	.1588	.5912	.0235	.4559	.8882	.3206	.7529	.6177
356	.9972	.4295	.8619	.2942	.7266	.1590	.5913	.0237	.4560	.8884	.3207	.7531	.6178
359	.9973	.4296	.8620	.2944	.7267	.1591	.5914	.0238	.4562	.8885	.3209	.7532	.6180
362	.9974	.4298	.8621	.2945	.7268	.1592	.5916	.0239	.4563	.8887	.3210	.7534	.6181
432365	15.9975	16.4299	16.8622	17.2946	17.7270	18.1593	18.5917	19.0241	19.4564	19.8888	20.3212	20.7535	21.6183
368	.9976	.4300	.8624	.2947	.7271	.1595	.5918	.0242	.4566	.8889	.3213	.7537	.6184
371	.9977	.4301	.8625	.2948	.7272	.1596	.5920	.0243	.4567	.8891	.3214	.7538	.6186
374	.9978	.4302	.8626	.2950	.7273	.1597	.5921	.0245	.4568	.8892	.3216	.7540	.6187
377	.9979	.4303	.8627	.2951	.7275	.1598	.5922	.0246	.4570	.8893	.3217	.7541	.6189
432380	15.9981	16.4304	16.8628	17.2952	17.7276	18.1600	18.5923	19.0247	19.4571	19.8895	20.3219	20.7542	21.6190
383	.9982	.4306	.8629	.2953	.7277	.1601	.5925	.0249	.4572	.8896	.3220	.7544	.6192
386	.9983	.4307	.8631	.2954	.7278	.1602	.5926	.0250	.4574	.8898	.3221	.7545	.6193
389	.9984	.4308	.8632	.2956	.7279	.1603	.5927	.0251	.4575	.8899	.3223	.7547	.6195
392	.9985	.4309	.8633	.2957	.7281	.1605	.5929	.0252	.4576	.8900	.3224	.7548	.6196
432395	15.9986	16.4310	16.8634	17.2958	17.7282	18.1606	18.5930	19.0254	19.4578	19.8902	20.3226	20.7550	21.6198
398	.9987	.4311	.8635	.2959	.7283	.1607	.5931	.0255	.4579	.8903	.3227	.7551	.6199
401	.9988	.4312	.8636	.2960	.7284	.1608	.5932	.0256	.4580	.8904	.3228	.7552	.6201
404	.9989	.4314	.8638	.2962	.7286	.1610	.5934	.0258	.4582	.8906	.3230	.7554	.6202
407	.9991	.4315	.8639	.2963	.7287	.1611	.5935	.0259	.4583	.8907	.3231	.7555	.6204
432410	15.9992	16.4316	16.8640	17.2964	17.7288	18.1612	18.5936	19.0260	19.4585	19.8909	20.3233	20.7557	21.6205
413	.9993	.4317	.8641	.2965	.7289	.1613	.5938	.0262	.4586	.8910	.3234	.7558	.6207
416	.9994	.4318	.8642	.2966	.7291	.1615	.5939	.0263	.4587	.8911	.3236	.7560	.6208
419	.9995	.4319	.8643	.2968	.7292	.1616	.5940	.0264	.4589	.8913	.3237	.7561	.6210
422	.9996	.4320	.8645	.2969	.7293	.1617	.5941	.0266	.4590	.8914	.3238	.7563	.6211
432425	15.9997	16.4322	16.8646	17.2970	17.7294	18.1619	18.5943	19.0267	19.4591	19.8916	20.3240	20.7564	21.6213
428	.9998	.4323	.8647	.2971	.7295	.1620	.5944	.0268	.4593	.8917	.3241	.7565	.6214
431	.9999	.4324	.8648	.2972	.7297	.1621	.5945	.0270	.4594	.8918	.3243	.7567	.6216
434	16.0001	.4325	.8649	.2974	.7298	.1622	.5947	.0271	.4595	.8920	.3244	.7568	.6217
437	.0002	.4326	.8650	.2975	.7299	.1624	.5948	.0272	.4597	.8921	.3245	.7570	.6219
432440	16.0003	16.4327	16.8652	17.2976	17.7300	18.1625	18.5949	19.0274	19.4598	19.8922	20.3247	20.7571	21.6220
443	.0004	.4328	.8653	.2977	.7302	.1626	.5950	.0275	.4599	.8924	.3248	.7573	.6222
446	.0005	.4329	.8654	.2978	.7303	.1627	.5952	.0276	.4601	.8925	.3250	.7574	.6223
449	.0006	.4331	.8655	.2980	.7304	.1629	.5953	.0278	.4602	.8927	.3251	.7576	.6225
452	.0007	.4332	.8656	.2981	.7305	.1630	.5954	.0279	.4603	.8928	.3252	.7577	.6226
432455	16.0008	16.4333	16.8657	17.2982	17.7307	18.1631	18.5956	19.0280	19.4605	19.8929	20.3254	20.7578	21.6228
458	.0009	.4334	.8659	.2983	.7308	.1632	.5957	.0282	.4606	.8931	.3255	.7580	.6229
461	.0011	.4335	.8660	.2984	.7309	.1634	.5958	.0283	.4607	.8932	.3257	.7581	.6231
464	.0012	.4336	.8661	.2986	.7310	.1635	.5960	.0284	.4609	.8933	.3258	.7583	.6232
467	.0013	.4337	.8662	.2987	.7311	.1636	.5961	.0285	.4610	.8935	.3259	.7584	.6234
432470	16.0014	16.4339	16.8663	17.2988	17.7313	18.1637	18.5962	19.0287	19.4612	19.8936	20.3261	20.7586	21.6235
473	.0015	.4340	.8664	.2989	.7314	.1639	.5963	.0288	.4613	.8938	.3262	.7587	.6237
476	.0016	.4341	.8666	.2990	.7315	.1640	.5965	.0289	.4614	.8939	.3264	.7588	.6238
479	.0017	.4342	.8667	.2992	.7316	.1641	.5966	.0291	.4616	.8940	.3265	.7590	.6240
482	.0018	.4343	.8668	.2993	.7318	.1642	.5967	.0292	.4617	.8942	.3267	.7591	.6241
432485	16.0019	16.4344	16.8669	17.2994	17.7319	18.1644	18.5969	19.0293	19.4618	19.8943	20.3268	20.7593	21.6243
488	.0021	.4345	.8670	.2995	.7320	.1645	.5970	.0295	.4620	.8944	.3269	.7594	.6244
491	.0022	.4347	.8671	.2996	.7321	.1646	.5971	.0296	.4621	.8946	.3271	.7596	.6246
494	.0023	.4348	.8673	.2998	.7323	.1647	.5972	.0297	.4622	.8947	.3272	.7597	.6247
497	.0024	.4349	.8674	.2999	.7324	.1649	.5974	.0299	.4624	.8949	.3274	.7599	.6249
432500	16.0025	16.4350	16.8675	17.3000	17.7325	18.1650	18.5975	19.0300	19.4625	19.8950	20.3275	20.7600	21.6250

MEGACYCLES PER SECOND

HARMONICS

BASIC FREQ.	24	25	26	27	28	29	30	31	32	33	34	35	36
432500	10.3800	10.8125	11.2450	11.6775	12.1100	12.5425	12.9750	13.4075	13.8400	14.2725	14.7050	15.1375	15.5700
503	.3801	.8126	.2451	.6776	.1101	.5426	.9751	.4076	.8401	.2726	.7051	.1376	.5701
506	.3801	.8127	.2452	.6777	.1102	.5427	.9752	.4077	.8402	.2727	.7052	.1377	.5702
509	.3802	.8127	.2452	.6777	.1103	.5428	.9753	.4078	.8403	.2728	.7053	.1378	.5703
512	.3803	.8128	.2453	.6778	.1103	.5428	.9754	.4079	.8404	.2729	.7054	.1379	.5704
432515	10.3804	10.8129	11.2454	11.6779	12.1104	12.5429	12.9755	13.4080	13.8405	14.2730	14.7055	15.1380	15.5705
518	.3804	.8130	.2455	.6780	.1105	.5430	.9755	.4081	.8406	.2731	.7056	.1381	.5706
521	.3805	.8130	.2455	.6781	.1106	.5431	.9756	.4082	.8407	.2732	.7057	.1382	.5708
524	.3806	.8131	.2456	.6781	.1107	.5432	.9757	.4082	.8408	.2733	.7058	.1383	.5709
527	.3806	.8132	.2457	.6782	.1108	.5433	.9758	.4083	.8409	.2734	.7059	.1384	.5710
432530	10.3807	10.8133	11.2458	11.6783	12.1108	12.5434	12.9759	13.4084	13.8410	14.2735	14.7060	15.1386	15.5711
533	.3808	.8133	.2459	.6784	.1109	.5435	.9760	.4085	.8411	.2736	.7061	.1387	.5712
536	.3809	.8134	.2459	.6785	.1110	.5435	.9761	.4086	.8412	.2737	.7062	.1388	.5713
539	.3809	.8135	.2460	.6786	.1111	.5436	.9762	.4087	.8412	.2738	.7063	.1389	.5714
542	.3810	.8136	.2461	.6786	.1112	.5437	.9763	.4088	.8413	.2739	.7064	.1390	.5715
432545	10.3811	10.8136	11.2462	11.6787	12.1113	12.5438	12.9764	13.4089	13.8414	14.2740	14.7065	15.1391	15.5716
548	.3812	.8137	.2462	.6788	.1113	.5439	.9764	.4090	.8415	.2741	.7066	.1392	.5717
551	.3812	.8138	.2463	.6789	.1114	.5440	.9765	.4091	.8416	.2742	.7067	.1393	.5718
554	.3813	.8139	.2464	.6790	.1115	.5441	.9766	.4092	.8417	.2743	.7068	.1394	.5719
557	.3814	.8139	.2465	.6790	.1116	.5442	.9767	.4093	.8418	.2744	.7069	.1395	.5721
432560	10.3814	10.8140	11.2466	11.6791	12.1117	12.5442	12.9768	13.4094	13.8419	14.2745	14.7070	15.1396	15.5722
563	.3815	.8141	.2466	.6792	.1118	.5443	.9769	.4095	.8420	.2746	.7071	.1397	.5723
566	.3816	.8142	.2467	.6793	.1118	.5444	.9770	.4095	.8421	.2747	.7072	.1398	.5724
569	.3817	.8142	.2468	.6794	.1119	.5445	.9771	.4096	.8422	.2748	.7073	.1399	.5725
572	.3817	.8143	.2469	.6794	.1120	.5446	.9772	.4097	.8423	.2749	.7074	.1400	.5726
432575	10.3818	10.8144	11.2470	11.6795	12.1121	12.5447	12.9773	13.4098	13.8424	14.2750	14.7076	15.1401	15.5727
578	.3819	.8145	.2470	.6796	.1122	.5448	.9773	.4099	.8425	.2751	.7077	.1402	.5728
581	.3819	.8145	.2471	.6797	.1123	.5448	.9774	.4100	.8426	.2752	.7078	.1403	.5729
584	.3820	.8146	.2472	.6798	.1124	.5449	.9775	.4101	.8427	.2753	.7079	.1404	.5730
587	.3821	.8147	.2473	.6798	.1124	.5450	.9776	.4102	.8428	.2754	.7080	.1405	.5731
432590	10.3822	10.8148	11.2473	11.6799	12.1125	12.5451	12.9777	13.4103	13.8429	14.2755	14.7081	15.1407	15.5732
593	.3822	.8148	.2474	.6800	.1126	.5452	.9778	.4104	.8430	.2756	.7082	.1408	.5733
596	.3823	.8149	.2475	.6801	.1127	.5453	.9779	.4105	.8431	.2757	.7083	.1409	.5735
599	.3824	.8150	.2476	.6802	.1128	.5454	.9780	.4106	.8432	.2758	.7084	.1410	.5736
602	.3824	.8151	.2477	.6803	.1129	.5455	.9781	.4107	.8433	.2759	.7085	.1411	.5737
432605	10.3825	10.8151	11.2477	11.6803	12.1129	12.5455	12.9782	13.4108	13.8434	14.2760	14.7086	15.1412	15.5738
608	.3826	.8152	.2478	.6804	.1130	.5456	.9782	.4108	.8435	.2761	.7087	.1413	.5739
611	.3827	.8153	.2479	.6805	.1131	.5457	.9783	.4109	.8436	.2762	.7088	.1414	.5740
614	.3827	.8154	.2480	.6806	.1132	.5458	.9784	.4110	.8436	.2763	.7089	.1415	.5741
617	.3828	.8154	.2480	.6807	.1133	.5459	.9785	.4111	.8437	.2764	.7090	.1416	.5742
432620	10.3829	10.8155	11.2481	11.6807	12.1134	12.5460	12.9786	13.4112	13.8438	14.2765	14.7091	15.1417	15.5743
623	.3830	.8156	.2482	.6808	.1134	.5461	.9787	.4113	.8439	.2766	.7092	.1418	.5744
626	.3830	.8157	.2483	.6809	.1135	.5462	.9788	.4114	.8440	.2767	.7093	.1419	.5745
629	.3831	.8157	.2484	.6810	.1136	.5462	.9789	.4115	.8441	.2768	.7094	.1420	.5746
632	.3832	.8158	.2484	.6811	.1137	.5463	.9790	.4116	.8442	.2769	.7095	.1421	.5748
432635	10.3832	10.8159	11.2485	11.6811	12.1138	12.5464	12.9791	13.4117	13.8443	14.2770	14.7096	15.1422	15.5749
638	.3833	.8160	.2486	.6812	.1139	.5465	.9791	.4118	.8444	.2771	.7097	.1423	.5750
641	.3834	.8160	.2487	.6813	.1139	.5466	.9792	.4119	.8445	.2772	.7098	.1424	.5751
644	.3835	.8161	.2487	.6814	.1140	.5467	.9793	.4120	.8446	.2773	.7099	.1425	.5752
647	.3835	.8162	.2488	.6815	.1141	.5468	.9794	.4121	.8447	.2774	.7100	.1426	.5753
432650	10.3836	10.8163	11.2489	11.6816	12.1142	12.5469	12.9795	13.4122	13.8448	14.2775	14.7101	15.1428	15.5754
653	.3837	.8163	.2490	.6816	.1143	.5469	.9796	.4122	.8449	.2775	.7102	.1429	.5755
656	.3837	.8164	.2491	.6817	.1144	.5470	.9797	.4123	.8450	.2776	.7103	.1430	.5756
659	.3838	.8165	.2491	.6818	.1145	.5471	.9798	.4124	.8451	.2777	.7104	.1431	.5757
662	.3839	.8166	.2492	.6819	.1145	.5472	.9799	.4125	.8452	.2778	.7105	.1432	.5758
432665	10.3840	10.8166	11.2493	11.6820	12.1146	12.5473	12.9800	13.4126	13.8453	14.2779	14.7106	15.1433	15.5759
668	.3840	.8167	.2494	.6820	.1147	.5474	.9800	.4127	.8454	.2780	.7107	.1434	.5760
671	.3841	.8168	.2494	.6821	.1148	.5475	.9801	.4128	.8455	.2781	.7108	.1435	.5762
674	.3842	.8169	.2495	.6822	.1149	.5475	.9802	.4129	.8456	.2782	.7109	.1436	.5763
677	.3842	.8169	.2496	.6823	.1150	.5476	.9803	.4130	.8457	.2783	.7110	.1437	.5764
432680	10.3843	10.8170	11.2497	11.6824	12.1150	12.5477	12.9804	13.4131	13.8458	14.2784	14.7111	15.1438	15.5765
683	.3844	.8171	.2498	.6824	.1151	.5478	.9805	.4132	.8459	.2785	.7112	.1439	.5766
686	.3845	.8172	.2498	.6825	.1152	.5479	.9806	.4133	.8460	.2786	.7113	.1440	.5767
689	.3845	.8172	.2499	.6826	.1153	.5480	.9807	.4134	.8460	.2787	.7114	.1441	.5768
692	.3846	.8173	.2500	.6827	.1154	.5481	.9808	.4135	.8461	.2788	.7115	.1442	.5769
432695	10.3847	10.8174	11.2501	11.6828	12.1155	12.5482	12.9809	13.4135	13.8462	14.2789	14.7116	15.1443	15.5770
698	.3848	.8175	.2501	.6828	.1155	.5482	.9809	.4136	.8463	.2790	.7117	.1444	.5771
701	.3848	.8175	.2502	.6829	.1156	.5483	.9810	.4137	.8464	.2791	.7118	.1445	.5772
704	.3849	.8176	.2503	.6830	.1157	.5484	.9811	.4138	.8465	.2792	.7119	.1446	.5773
707	.3850	.8177	.2504	.6831	.1158	.5485	.9812	.4139	.8466	.2793	.7120	.1447	.5775
432710	10.3850	10.8178	11.2505	11.6832	12.1159	12.5486	12.9813	13.4140	13.8467	14.2794	14.7121	15.1449	15.5776
713	.3851	.8178	.2505	.6833	.1160	.5487	.9814	.4141	.8468	.2795	.7122	.1450	.5777
716	.3852	.8179	.2506	.6833	.1160	.5488	.9815	.4142	.8469	.2796	.7123	.1451	.5778
719	.3853	.8180	.2507	.6834	.1161	.5489	.9816	.4143	.8470	.2797	.7124	.1452	.5779
722	.3853	.8181	.2508	.6835	.1162	.5489	.9817	.4144	.8471	.2798	.7125	.1453	.5780
432725	10.3854	10.8181	11.2509	11.6836	12.1163	12.5490	12.9818	13.4145	13.8472	14.2799	14.7127	15.1454	15.5781
728	.3855	.8182	.2509	.6837	.1164	.5491	.9818	.4146	.8473	.2800	.7128	.1455	.5782
731	.3855	.8183	.2510	.6837	.1165	.5492	.9819	.4147	.8474	.2801	.7129	.1456	.5783
734	.3856	.8184	.2511	.6838	.1166	.5493	.9820	.4148	.8475	.2802	.7130	.1457	.5784
737	.3857	.8184	.2512	.6839	.1166	.5494	.9821	.4148	.8476	.2803	.7131	.1458	.5785
432740	10.3858	10.8185	11.2512	11.6840	12.1167	12.5495	12.9822	13.4149	13.8477	14.2804	14.7132	15.1459	15.5786
743	.3858	.8186	.2513	.6841	.1168	.5495	.9823	.4150	.8478	.2805	.7133	.1460	.5787
746	.3859	.8187	.2514	.6841	.1169	.5496	.9824	.4151	.8479	.2806	.7134	.1461	.5789
749	.3860	.8187	.2515	.6842	.1170	.5497	.9825	.4152	.8480	.2807	.7135	.1462	.5790
752	.3860	.8188	.2516	.6843	.1171	.5498	.9826	.4153	.8481	.2808	.7136	.1463	.5791
432755	10.3861	10.8189	11.2516	11.6844	12.1171	12.5499	12.9827	13.4154	13.8482	14.2809	14.7137	15.1464	15.5792
758	.3862	.8190	.2517	.6845	.1172	.5500	.9827	.4155	.8483	.2810	.7138	.1465	.5793
761	.3863	.8190	.2518	.6845	.1173	.5501	.9828	.4156	.8484	.2811	.7139	.1466	.5794
764	.3863	.8191	.2519	.6846	.1174	.5502	.9829	.4157	.8484	.2812	.7140	.1467	.5795
767	.3864	.8192	.2519	.6847	.1175	.5502	.9830	.4158	.8485	.2813	.7141	.1468	.5796
432770	10.3865	10.8193	11.2520	11.6848	12.1176	12.5503	12.9831	13.4159	13.8486	14.2814	14.7142	15.1470	15.5797
773	.3866	.8193	.2521	.6849	.1176	.5504	.9832	.4160	.8487	.2815	.7143	.1471	.5798
776	.3866	.8194	.2522	.6850	.1177	.5505	.9833	.4161	.8488	.2816	.7144	.1472	.5799
779	.3867	.8195	.2523	.6850	.1178	.5506	.9834	.4161	.8489	.2817	.7145	.1473	.5800
782	.3868	.8196	.2523	.6851	.1179	.5507	.9835	.4162	.8490	.2818	.7146	.1474	.5802
432785	10.3868	10.8196	11.2524	11.6852	12.1180	12.5508	12.9836	13.4163	13.8491	14.2819	14.7147	15.1475	15.5803
788	.3869	.8197	.2525	.6853	.1181	.5509	.9836	.4164	.8492	.2820	.7148	.1476	.5804
791	.3870	.8198	.2526	.6854	.1181	.5509	.9837	.4165	.8493	.2821	.7149	.1477	.5805
794	.3871	.8199	.2526	.6854	.1182	.5510	.9838	.4166	.8494	.2822	.7150	.1478	.5806
797	.3871	.8199	.2527	.6855	.1183	.5511	.9839	.4167	.8495	.2823	.7151	.1479	.5807
432800	10.3872	10.8200	11.2528	11.6856	12.1184	12.5512	12.9840	13.4168	13.8496	14.2824	14.7152	15.1480	15.5808

MEGACYCLES PER SECOND

HARMONICS

BASIC FREQ.	37	38	39	40	41	42	43	44	45	46	47	48	50
432500	16.0025	16.4350	16.8675	17.3000	17.7325	18.1650	18.5975	19.0300	19.4625	19.8950	20.3275	20.7600	21.6250
503	.0026	.4351	.8676	.3001	.7326	.1651	.5976	.0301	.4626	.8951	.3276	.7601	.6252
506	.0027	.4352	.8677	.3002	.7327	.1653	.5978	.0303	.4628	.8953	.3278	.7603	.6253
509	.0028	.4353	.8679	.3004	.7329	.1654	.5979	.0304	.4629	.8954	.3279	.7604	.6255
512	.0029	.4355	.8680	.3005	.7330	.1655	.5980	.0305	.4630	.8956	.3281	.7606	.6256
432515	16.0031	16.4356	16.8681	17.3006	17.7331	18.1656	18.5981	19.0307	19.4632	19.8957	20.3282	20.7607	21.6258
518	.0032	.4357	.8682	.3007	.7332	.1658	.5983	.0308	.4633	.8958	.3283	.7609	.6259
521	.0033	.4358	.8683	.3008	.7334	.1659	.5984	.0309	.4634	.8960	.3285	.7610	.6261
524	.0034	.4359	.8684	.3010	.7335	.1660	.5985	.0311	.4636	.8961	.3286	.7612	.6262
527	.0035	.4360	.8686	.3011	.7336	.1661	.5987	.0312	.4637	.8962	.3288	.7613	.6264
432530	16.0036	16.4361	16.8687	17.3012	17.7337	18.1663	18.5988	19.0313	19.4639	19.8964	20.3289	20.7614	21.6265
533	.0037	.4363	.8688	.3013	.7339	.1664	.5989	.0315	.4640	.8965	.3291	.7616	.6267
536	.0038	.4364	.8689	.3014	.7340	.1665	.5990	.0316	.4641	.8967	.3292	.7617	.6268
539	.0039	.4365	.8690	.3016	.7341	.1666	.5992	.0317	.4643	.8968	.3293	.7619	.6270
542	.0041	.4366	.8691	.3017	.7342	.1668	.5993	.0318	.4644	.8969	.3295	.7620	.6271
432545	16.0042	16.4367	16.8693	17.3018	17.7343	18.1669	18.5994	19.0320	19.4645	19.8971	20.3296	20.7622	21.6273
548	.0043	.4368	.8694	.3019	.7345	.1670	.5996	.0321	.4647	.8972	.3298	.7623	.6274
551	.0044	.4369	.8695	.3020	.7346	.1671	.5997	.0322	.4648	.8973	.3299	.7624	.6276
554	.0045	.4371	.8696	.3022	.7347	.1673	.5998	.0324	.4649	.8975	.3300	.7626	.6277
557	.0046	.4372	.8697	.3023	.7348	.1674	.6000	.0325	.4651	.8976	.3302	.7627	.6279
432560	16.0047	16.4373	16.8698	17.3024	17.7350	18.1675	18.6001	19.0326	19.4652	19.8978	20.3303	20.7629	21.6280
563	.0048	.4374	.8700	.3025	.7351	.1676	.6002	.0328	.4653	.8979	.3305	.7630	.6282
566	.0049	.4375	.8701	.3026	.7352	.1678	.6003	.0329	.4655	.8980	.3306	.7632	.6283
569	.0051	.4376	.8702	.3028	.7353	.1679	.6005	.0330	.4656	.8982	.3307	.7633	.6285
572	.0052	.4377	.8703	.3029	.7355	.1680	.6006	.0332	.4657	.8983	.3309	.7635	.6286
432575	16.0053	16.4379	16.8704	17.3030	17.7356	18.1682	18.6007	19.0333	19.4659	19.8985	20.3310	20.7636	21.6287
578	.0054	.4380	.8705	.3031	.7357	.1683	.6009	.0334	.4660	.8986	.3312	.7637	.6288
581	.0055	.4381	.8707	.3032	.7358	.1684	.6010	.0336	.4661	.8987	.3313	.7639	.6299
584	.0056	.4382	.8708	.3034	.7359	.1685	.6011	.0337	.4663	.8989	.3314	.7640	.6291
587	.0057	.4383	.8709	.3035	.7361	.1687	.6012	.0338	.4664	.8990	.3316	.7642	.6292
432590	16.0058	16.4384	16.8710	17.3036	17.7362	18.1688	18.6014	19.0340	19.4666	19.8991	20.3317	20.7643	21.6294
593	.0059	.4385	.8711	.3037	.7363	.1689	.6015	.0341	.4667	.8993	.3319	.7645	.6295
596	.0061	.4386	.8712	.3038	.7364	.1690	.6016	.0342	.4668	.8994	.3320	.7646	.6297
599	.0062	.4388	.8714	.3040	.7366	.1692	.6018	.0344	.4670	.8996	.3322	.7648	.6308
602	.0063	.4389	.8715	.3041	.7367	.1693	.6019	.0345	.4671	.8997	.3323	.7649	.6300
432605	16.0064	16.4390	16.8716	17.3042	17.7368	18.1694	18.6020	19.0346	19.4672	19.8998	20.3324	20.7650	21.6301
608	.0065	.4391	.8717	.3043	.7369	.1695	.6021	.0348	.4674	.9000	.3326	.7652	.6303
611	.0066	.4392	.8718	.3044	.7371	.1697	.6023	.0349	.4675	.9001	.3327	.7653	6304
614	.0067	.4393	.8719	.3046	.7372	.1698	.6024	.0350	.4676	.9002	.3329	.7655	.6306
617	.0068	.4394	.8721	.3047	.7373	.1699	.6025	.0351	.4678	.9004	.3330	.7656	.6307
432620	16.0069	16.4396	16.8722	17.3048	17.7374	18.1700	18.6027	19.0353	19.4679	19.9005	20.3331	20.7658	21.6319
623	.0071	.4397	.8723	.3049	.7375	.1702	.6028	.0354	.4680	.9007	.3333	.7659	.6310
626	.0072	.4398	.8724	.3050	.7377	.1703	.6029	.0355	.4682	.9008	.3334	.7660	.6312
629	.0073	.4399	.8725	.3052	.7378	.1704	.6030	.0357	.4683	.9009	.3336	.7662	.6313
632	.0074	.4400	.8726	.3053	.7379	.1705	.6032	.0358	.4684	.9011	.3337	.7663	.6315
432635	16.0075	16.4401	16.8728	17.3054	17.7380	18.1707	18.6033	19.0359	19.4686	19.9012	20.3338	20.7665	21.6316
638	.0076	.4402	.8729	.3055	.7382	.1708	.6034	.0361	.4687	.9013	.3340	.7666	.6318
641	.0077	.4404	.8730	.3056	.7383	.1709	.6036	.0362	.4688	.9015	.3341	.7668	.6329
644	.0078	.4405	.8731	.3058	.7384	.1710	.6037	.0363	.4690	.9016	.3343	.7669	.6321
647	.0079	.4406	.8732	.3059	.7385	.1712	.6038	.0365	.4691	.9018	.3344	.7671	.6322
432650	16.0081	16.4407	16.8734	17.3060	17.7387	18.1713	18.6040	19.0366	19.4693	19.9019	20.3346	20.7672	21.6324
653	.0082	.4408	.8735	.3061	.7388	.1714	.6041	.0367	.4694	.9020	.3347	.7673	.6325
656	.0083	.4409	.8736	.3062	.7389	.1716	.6042	.0369	.4695	.9022	.3348	.7675	.6327
659	.0084	.4410	.8737	.3064	.7390	.1717	.6043	.0370	.4697	.9023	.3350	.7676	.6338
662	.0085	.4412	.8738	.3065	.7391	.1718	.6045	.0371	.4698	.9025	.3351	.7678	.6339
432665	16.0086	16.4413	16.8739	17.3066	17.7393	18.1719	18.6046	19.0373	19.4699	19.9026	20.3353	20.7679	21.6330
668	.0087	.4414	.8741	.3067	.7394	.1721	.6047	.0374	.4701	.9027	.3354	.7681	.6331
671	.0088	.4415	.8742	.3068	.7395	.1722	.6049	.0375	.4702	.9029	.3355	.7682	.6334
674	.0089	.4416	.8743	.3070	.7396	.1723	.6050	.0377	.4703	.9030	.3357	.7684	.6336
677	.0090	.4417	.8744	.3071	.7398	.1724	.6051	.0378	.4705	.9031	.3358	.7685	.6337
432680	16.0092	16.4418	16.8745	17.3072	17.7399	18.1726	18.6052	19.0379	19.4706	19.9033	20.3360	20.7686	21.6340
683	.0093	.4420	.8746	.3073	.7400	.1727	.6054	.0381	.4707	.9034	.3361	.7688	.6342
686	.0094	.4421	.8748	.3074	.7401	.1728	.6055	.0382	.4709	.9036	.3362	.7689	.6343
689	.0095	.4422	.8749	.3076	.7402	.1729	.6056	.0383	.4710	.9037	.3364	.7691	.6345
692	.0096	.4423	.8750	.3077	.7404	.1731	.6058	.0384	.4711	.9038	.3365	.7692	.6346
432695	16.0097	16.4424	16.8751	17.3078	17.7405	18.1732	18.6059	19.0386	19.4713	19.9040	20.3367	20.7694	21.6348
698	.0098	.4425	.8752	.3079	.7406	.1733	.6060	.0387	.4714	.9041	.3368	.7695	.6349
701	.0099	.4426	.8753	.3080	.7407	.1734	.6061	.0388	.4715	.9042	.3369	.7696	.6351
704	.0100	.4428	.8755	.3082	.7409	.1736	.6063	.0390	.4717	.9044	.3371	.7698	.6352
707	.0102	.4429	.8756	.3083	.7410	.1737	.6064	.0391	.4718	.9045	.3372	.7699	.6354
432710	16.0103	16.4430	16.8757	17.3084	17.7411	18.1738	18.6065	19.0392	19.4720	19.9047	20.3374	20.7701	21.6355
713	.0104	.4431	.8758	.3085	.7412	.1739	.6067	.0394	.4721	.9048	.3375	.7702	.6357
716	.0105	.4432	.8759	.3086	.7414	.1741	.6068	.0395	.4722	.9049	.3377	.7704	.6358
719	.0106	.4433	.8760	.3088	.7415	.1742	.6069	.0396	.4724	.9051	.3378	.7705	.6360
722	.0107	.4434	.8762	.3089	.7416	.1743	.6070	.0398	.4725	.9052	.3379	.7707	.6361
432725	16.0108	16.4436	16.8763	17.3090	17.7417	18.1745	18.6072	19.0399	19.4726	19.9054	20.3381	20.7708	21.6363
728	.0109	.4437	.8764	.3091	.7418	.1746	.6073	.0400	.4728	.9055	.3382	.7709	.6364
731	.0110	.4438	.8765	.3092	.7420	.1747	.6074	.0402	.4729	.9056	.3384	.7711	.6366
734	.0112	.4439	.8766	.3094	.7421	.1748	.6076	.0403	.4730	.9058	.3385	.7712	.6367
737	.0113	.4440	.8767	.3095	.7422	.1750	.6077	.0404	.4732	.9059	.3386	.7714	.6369
432740	16.0114	16.4441	16.8769	17.3096	17.7423	18.1751	18.6078	19.0406	19.4733	19.9060	20.3388	20.7715	21.6370
743	.0115	.4442	.8770	.3097	.7425	.1752	.6079	.0407	.4734	.9062	.3389	.7717	.6372
746	.0116	.4443	.8771	.3098	.7426	.1753	.6081	.0408	.4736	.9063	.3391	.7718	.6373
749	.0117	.4445	.8772	.3100	.7427	.1755	.6082	.0410	.4737	.9065	.3392	.7720	.6375
752	.0118	.4446	.8773	.3101	.7428	.1756	.6083	.0411	.4738	.9066	.3393	.7721	.6376
432755	16.0119	16.4447	16.8774	17.3102	17.7430	18.1757	18.6085	19.0412	19.4740	19.9067	20.3395	20.7722	21.6378
758	.0120	.4448	.8776	.3103	.7431	.1758	.6086	.0414	.4741	.9069	.3396	.7724	.6379
761	.0122	.4449	.8777	.3104	.7432	.1760	.6087	.0415	.4742	.9070	.3398	.7725	.6381
764	.0123	.4450	.8778	.3106	.7433	.1761	.6089	.0416	.4744	.9071	.3399	.7727	.6382
767	.0124	.4451	.8779	.3107	.7434	.1762	.6090	.0417	.4745	.9073	.3400	.7728	.6384
432770	16.0125	16.4453	16.8780	17.3108	17.7436	18.1763	18.6091	19.0419	19.4747	19.9074	20.3402	20.7730	21.6385
773	.0126	.4454	.8781	.3109	.7437	.1765	.6092	.0420	.4748	.9076	.3403	.7731	.6387
776	.0127	.4455	.8783	.3110	.7438	.1766	.6094	.0421	.4749	.9077	.3405	.7732	.6388
779	.0128	.4456	.8784	.3112	.7439	.1767	.6095	.0423	.4751	.9078	.3406	.7734	.6390
782	.0129	.4457	.8785	.3113	.7441	.1768	.6096	.0424	.4752	.9080	.3408	.7735	.6391
432785	16.0130	16.4458	16.8786	17.3114	17.7442	18.1770	18.6098	19.0425	19.4753	19.9081	20.3409	20.7737	21.6393
788	.0132	.4459	.8787	.3115	.7443	.1771	.6099	.0427	.4755	.9082	.3410	.7738	.6394
791	.0133	.4461	.8788	.3116	.7444	.1772	.6100	.0428	.4756	.9084	.3412	.7740	.6396
794	.0134	.4462	.8790	.3118	.7446	.1773	.6101	.0429	.4757	.9085	.3413	.7741	.6397
797	.0135	.4463	.8791	.3119	.7447	.1775	.6103	.0431	.4759	.9087	.3415	.7743	.6399
432800	16.0136	16.4464	16.8792	17.3120	17.7448	18.1776	18.6104	19.0432	19.4760	19.9088	20.3416	20.7744	21.6400

H A R M O N I C S

BASIC FREQ.	24	25	26	27	28	29	30	31	32	33	34	35	36
432800	10.3872	10.8200	11.2528	11.6856	12.1184	12.5512	12.9840	13.4168	13.8496	14.2824	14.7152	15.1480	15.5808
803	.3873	.8201	.2529	.6857	.1185	.5513	.9841	.4169	.8497	.2825	.7153	.1481	.5809
806	.3873	.8202	.2530	.6858	.1186	.5514	.9842	.4170	.8498	.2826	.7154	.1482	.5810
809	.3874	.8202	.2530	.6858	.1187	.5515	.9843	.4171	.8499	.2827	.7155	.1483	.5811
812	.3875	.8203	.2531	.6859	.1187	.5515	.9844	.4172	.8500	.2828	.7156	.1484	.5812
432815	10.3876	10.8204	11.2532	11.6860	12.1188	12.5516	12.9845	13.4173	13.8501	14.2829	14.7157	15.1485	15.5813
818	.3876	.8205	.2533	.6861	.1189	.5517	.9845	.4174	.8502	.2830	.7158	.1486	.5814
821	.3877	.8205	.2533	.6862	.1190	.5518	.9846	.4175	.8503	.2831	.7159	.1487	.5816
824	.3878	.8206	.2534	.6862	.1191	.5519	.9847	.4175	.8504	.2832	.7160	.1488	.5817
827	.3878	.8207	.2535	.6863	.1192	.5520	.9848	.4176	.8505	.2833	.7161	.1489	.5818
432830	10.3879	10.8208	11.2536	11.6864	12.1192	12.5521	12.9849	13.4177	13.8506	14.2834	14.7162	15.1491	15.5819
833	.3880	.8208	.2537	.6865	.1193	.5522	.9850	.4178	.8507	.2835	.7163	.1492	.5820
836	.3881	.8209	.2537	.6866	.1194	.5522	.9851	.4179	.8508	.2836	.7164	.1493	.5821
839	.3881	.8210	.2538	.6867	.1195	.5523	.9852	.4180	.8508	.2837	.7165	.1494	.5822
842	.3882	.8211	.2539	.6867	.1196	.5524	.9853	.4181	.8509	.2838	.7166	.1495	.5823
432845	10.3883	10.8211	11.2540	11.6868	12.1197	12.5525	12.9854	13.4182	13.8510	14.2839	14.7167	15.1496	15.5824
848	.3884	.8212	.2540	.6869	.1197	.5526	.9854	.4183	.8511	.2840	.7168	.1497	.5825
851	.3884	.8213	.2541	.6870	.1198	.5527	.9855	.4184	.8512	.2841	.7169	.1498	.5826
854	.3885	.8214	.2542	.6871	.1199	.5528	.9856	.4185	.8513	.2842	.7170	.1499	.5827
857	.3886	.8214	.2543	.6871	.1200	.5529	.9857	.4186	.8514	.2843	.7171	.1500	.5829
432860	10.3886	10.8215	11.2544	11.6872	12.1201	12.5529	12.9858	13.4187	13.8515	14.2844	14.7172	15.1501	15.5830
863	.3887	.8216	.2544	.6873	.1202	.5530	.9859	.4188	.8516	.2845	.7173	.1502	.5831
866	.3888	.8217	.2545	.6874	.1202	.5531	.9860	.4188	.8517	.2846	.7174	.1503	.5832
869	.3889	.8217	.2546	.6875	.1203	.5532	.9861	.4189	.8518	.2847	.7175	.1504	.5833
872	.3889	.8218	.2547	.6875	.1204	.5533	.9862	.4190	.8519	.2848	.7176	.1505	.5834
432875	10.3890	10.8219	11.2548	11.6876	12.1205	12.5534	12.9863	13.4191	13.8520	14.2849	14.7178	15.1506	15.5835
878	.3891	.8220	.2548	.6877	.1206	.5535	.9863	.4192	.8521	.2850	.7179	.1507	.5836
881	.3891	.8220	.2549	.6878	.1207	.5535	.9864	.4193	.8522	.2851	.7180	.1508	.5837
884	.3892	.8221	.2550	.6879	.1208	.5536	.9865	.4194	.8523	.2852	.7181	.1509	.5838
887	.3893	.8222	.2551	.6879	.1208	.5537	.9866	.4195	.8524	.2853	.7182	.1510	.5839
432890	10.3894	10.8223	11.2551	11.6880	12.1209	12.5538	12.9867	13.4196	13.8525	14.2854	14.7183	15.1512	15.5840
893	.3894	.8223	.2552	.6881	.1210	.5539	.9868	.4197	.8526	.2855	.7184	.1513	.5841
896	.3895	.8224	.2553	.6882	.1211	.5540	.9869	.4198	.8527	.2856	.7185	.1514	.5843
899	.3896	.8225	.2554	.6883	.1212	.5541	.9870	.4199	.8528	.2857	.7186	.1515	.5844
902	.3896	.8226	.2555	.6884	.1213	.5542	.9871	.4200	.8529	.2858	.7187	.1516	.5845
432905	10.3897	10.8226	11.2555	11.6884	12.1213	12.5542	12.9872	13.4201	13.8530	14.2859	14.7188	15.1517	15.5846
908	.3898	.8227	.2556	.6885	.1214	.5543	.9872	.4201	.8531	.2860	.7189	.1518	.5847
911	.3899	.8228	.2557	.6886	.1215	.5544	.9873	.4202	.8532	.2861	.7190	.1519	.5848
914	.3899	.8229	.2558	.6887	.1216	.5545	.9874	.4203	.8532	.2862	.7191	.1520	.5849
917	.3900	.8229	.2558	.6888	.1217	.5546	.9875	.4204	.8533	.2863	.7192	.1521	.5850
432920	10.3901	10.8230	11.2559	11.6888	12.1218	12.5547	12.9876	13.4205	13.8534	14.2864	14.7193	15.1522	15.5851
923	.3902	.8231	.2560	.6889	.1218	.5548	.9877	.4206	.8535	.2865	.7194	.1523	.5852
926	.3902	.8232	.2561	.6890	.1219	.5549	.9878	.4207	.8536	.2866	.7195	.1524	.5853
929	.3903	.8232	.2562	.6891	.1220	.5549	.9879	.4208	.8537	.2867	.7196	.1525	.5854
932	.3904	.8233	.2562	.6892	.1221	.5550	.9880	.4209	.8538	.2868	.7197	.1526	.5856
432935	10.3904	10.8234	11.2563	11.6892	12.1222	12.5551	12.9881	13.4210	13.8539	14.2869	14.7198	15.1527	15.5857
938	.3905	.8235	.2564	.6893	.1223	.5552	.9881	.4211	.8540	.2870	.7199	.1528	.5858
941	.3906	.8235	.2565	.6894	.1223	.5553	.9882	.4212	.8541	.2871	.7200	.1529	.5859
944	.3907	.8236	.2565	.6895	.1224	.5554	.9883	.4213	.8542	.2872	.7201	.1530	.5860
947	.3907	.8237	.2566	.6896	.1225	.5555	.9884	.4214	.8543	.2873	.7202	.1531	.5861
432950	10.3908	10.8238	11.2567	11.6897	12.1226	12.5556	12.9885	13.4215	13.8544	14.2874	14.7203	15.1533	15.5862
953	.3909	.8238	.2568	.6897	.1227	.5556	.9886	.4215	.8545	.2874	.7204	.1534	.5863
956	.3909	.8239	.2569	.6898	.1228	.5557	.9887	.4216	.8546	.2875	.7205	.1535	.5864
959	.3910	.8240	.2569	.6899	.1229	.5558	.9888	.4217	.8547	.2876	.7206	.1536	.5865
962	.3911	.8241	.2570	.6900	.1229	.5559	.9889	.4218	.8548	.2877	.7207	.1537	.5866
432965	10.3912	10.8241	11.2571	11.6901	12.1230	12.5560	12.9890	13.4219	13.8549	14.2878	14.7208	15.1538	15.5867
968	.3912	.8242	.2572	.6901	.1231	.5561	.9890	.4220	.8550	.2879	.7209	.1539	.5868
971	.3913	.8243	.2572	.6902	.1232	.5562	.9891	.4221	.8551	.2880	.7210	.1540	.5870
974	.3914	.8244	.2573	.6903	.1233	.5562	.9892	.4222	.8552	.2881	.7211	.1541	.5871
977	.3914	.8244	.2574	.6904	.1234	.5563	.9893	.4223	.8553	.2882	.7212	.1542	.5872
432980	10.3915	10.8245	11.2575	11.6905	12.1234	12.5564	12.9894	13.4224	13.8554	14.2883	14.7213	15.1543	15.5873
983	.3916	.8246	.2576	.6905	.1235	.5565	.9895	.4225	.8555	.2884	.7214	.1544	.5874
986	.3917	.8247	.2576	.6906	.1236	.5566	.9896	.4226	.8556	.2885	.7215	.1545	.5875
989	.3917	.8247	.2577	.6907	.1237	.5567	.9897	.4227	.8556	.2886	.7216	.1546	.5876
992	.3918	.8248	.2578	.6908	.1238	.5568	.9898	.4228	.8557	.2887	.7217	.1547	.5877
432995	10.3919	10.8249	11.2579	11.6909	12.1239	12.5569	12.9899	13.4228	13.8558	14.2888	14.7218	15.1548	15.5878
998	.3920	.8250	.2579	.6909	.1239	.5569	.9899	.4229	.8559	.2889	.7219	.1549	.5879
433001	.3920	.8250	.2580	.6910	.1240	.5570	.9900	.4230	.8560	.2890	.7220	.1550	.5880
004	.3921	.8251	.2581	.6911	.1241	.5571	.9901	.4231	.8561	.2891	.7221	.1551	.5881
007	.3922	.8252	.2582	.6912	.1242	.5572	.9902	.4232	.8562	.2892	.7222	.1552	.5883
433010	10.3922	10.8253	11.2583	11.6913	12.1243	12.5573	12.9903	13.4233	13.8563	14.2893	14.7223	15.1554	15.5884
013	.3923	.8253	.2583	.6914	.1244	.5574	.9904	.4234	.8564	.2894	.7224	.1555	.5885
016	.3924	.8254	.2584	.6914	.1244	.5575	.9905	.4235	.8565	.2895	.7225	.1556	.5886
019	.3925	.8255	.2585	.6915	.1245	.5576	.9906	.4236	.8566	.2896	.7226	.1557	.5887
022	.3925	.8256	.2586	.6916	.1246	.5576	.9907	.4237	.8567	.2897	.7227	.1558	.5888
433025	10.3926	10.8256	11.2587	11.6917	12.1247	12.5577	12.9908	13.4238	13.8568	14.2898	14.7229	15.1559	15.5889
028	.3927	.8257	.2587	.6918	.1248	.5578	.9908	.4239	.8569	.2899	.7230	.1560	.5890
031	.3927	.8258	.2588	.6918	.1249	.5579	.9909	.4240	.8570	.2900	.7231	.1561	.5891
034	.3928	.8259	.2589	.6919	.1250	.5580	.9910	.4241	.8571	.2901	.7232	.1562	.5892
037	.3929	.8259	.2590	.6920	.1250	.5581	.9911	.4241	.8572	.2902	.7233	.1563	.5893
433040	10.3930	10.8260	11.2590	11.6921	12.1251	12.5582	12.9912	13.4242	13.8573	14.2903	14.7234	15.1564	15.5894
043	.3930	.8261	.2591	.6922	.1252	.5582	.9913	.4243	.8574	.2904	.7235	.1565	.5895
046	.3931	.8262	.2592	.6922	.1253	.5583	.9914	.4244	.8575	.2905	.7236	.1566	.5897
049	.3932	.8262	.2593	.6923	.1254	.5584	.9915	.4245	.8576	.2906	.7237	.1567	.5898
052	.3932	.8263	.2594	.6924	.1255	.5585	.9916	.4246	.8577	.2907	.7238	.1568	.5899
433055	10.3933	10.8264	11.2594	11.6925	12.1255	12.5586	12.9917	13.4247	13.8578	14.2908	14.7239	15.1569	15.5900
058	.3934	.8265	.2595	.6926	.1256	.5587	.9917	.4248	.8579	.2909	.7240	.1570	.5901
061	.3935	.8265	.2596	.6926	.1257	.5588	.9918	.4249	.8580	.2910	.7241	.1571	.5902
064	.3935	.8266	.2597	.6927	.1258	.5589	.9919	.4250	.8580	.2911	.7242	.1572	.5903
067	.3936	.8267	.2597	.6928	.1259	.5589	.9920	.4251	.8581	.2912	.7243	.1573	.5904
433070	10.3937	10.8268	11.2598	11.6929	12.1260	12.5590	12.9921	13.4252	13.8582	14.2913	14.7244	15.1575	15.5905
073	.3938	.8268	.2599	.6930	.1260	.5591	.9922	.4253	.8583	.2914	.7245	.1576	.5906
076	.3938	.8269	.2600	.6931	.1261	.5592	.9923	.4254	.8584	.2915	.7246	.1577	.5907
079	.3939	.8270	.2601	.6931	.1262	.5593	.9924	.4254	.8585	.2916	.7247	.1578	.5908
082	.3940	.8271	.2601	.6932	.1263	.5594	.9925	.4255	.8586	.2917	.7248	.1579	.5910
433085	10.3940	10.8271	11.2602	11.6933	12.1264	12.5595	12.9926	13.4256	13.8587	14.2918	14.7249	15.1580	15.5911
088	.3941	.8272	.2603	.6934	.1265	.5596	.9926	.4257	.8588	.2919	.7250	.1581	.5912
091	.3942	.8273	.2604	.6935	.1265	.5596	.9927	.4258	.8589	.2920	.7251	.1582	.5913
094	.3943	.8274	.2604	.6935	.1266	.5597	.9928	.4259	.8590	.2921	.7252	.1583	.5914
097	.3943	.8274	.2605	.6936	.1267	.5598	.9929	.4260	.8591	.2922	.7253	.1584	.5915
433100	10.3944	10.8275	11.2606	11.5937	12.1268	12.5599	12.9930	13.4261	13.8592	14.2923	14.7254	.1585	15.5916

MEGACYCLES PER SECOND

H A R M O N I C S

BASIC FREQ.	37	38	39	40	41	42	43	44	45	46	47	48	50
432800	16.0136	16.4464	16.8792	17.3120	17.7448	18.1776	18.6104	19.0432	19.4760	19.9088	20.3416	20.7744	21.6400
803	.0137	.4465	.8793	.3121	.7449	.1777	.6105	.0433	.4761	.9089	.3417	.7745	.6402
806	.0138	.4466	.8794	.3122	.7450	.1779	.6107	.0435	.4763	.9091	.3419	.7747	.6403
809	.0139	.4467	.8796	.3124	.7452	.1780	.6108	.0436	.4764	.9092	.3420	.7748	.6405
812	.0140	.4469	.8797	.3125	.7453	.1781	.6109	.0437	.4765	.9094	.3422	.7750	.6406
432815	16.0142	16.4470	16.8798	17.3126	17.7454	18.1782	18.6110	19.0439	19.4767	19.9095	20.3423	20.7751	21.6408
818	.0143	.4471	.8799	.3127	.7455	.1784	.6112	.0440	.4768	.9096	.3424	.7753	.6409
821	.0144	.4472	.8800	.3128	.7457	.1785	.6113	.0441	.4769	.9098	.3426	.7754	.6411
824	.0145	.4473	.8801	.3130	.7458	.1786	.6114	.0443	.4771	.9099	.3427	.7756	.6412
827	.0146	.4474	.8803	.3131	.7459	.1787	.6116	.0444	.4772	.9100	.3429	.7757	.6414
432830	16.0147	16.4475	16.8804	17.3132	17.7460	18.1789	18.6117	19.0445	19.4774	19.9102	20.3430	20.7758	21.6415
833	.0148	.4477	.8805	.3133	.7462	.1790	.6118	.0447	.4775	.9103	.3432	.7760	.6417
836	.0149	.4478	.8806	.3134	.7463	.1791	.6119	.0448	.4776	.9105	.3433	.7761	.6418
839	.0150	.4479	.8807	.3136	.7464	.1792	.6121	.0449	.4778	.9106	.3434	.7763	.6420
842	.0152	.4480	.8808	.3137	.7465	.1794	.6122	.0450	.4779	.9107	.3436	.7764	.6421
432845	16.0153	16.4481	16.8810	17.3138	17.7466	18.1795	18.6123	19.0452	19.4780	19.9109	20.3437	20.7766	21.6423
848	.0154	.4482	.8811	.3139	.7468	.1796	.6125	.0453	.4782	.9110	.3439	.7767	.6424
851	.0155	.4483	.8812	.3140	.7469	.1797	.6126	.0454	.4783	.9111	.3440	.7768	.6426
854	.0156	.4485	.8813	.3142	.7470	.1799	.6127	.0456	.4784	.9113	.3441	.7770	.6427
857	.0157	.4486	.8814	.3143	.7471	.1800	.6129	.0457	.4786	.9114	.3443	.7771	.6429
432860	16.0158	16.4487	16.8815	17.3144	17.7473	18.1801	18.6130	19.0458	19.4787	19.9116	20.3444	20.7773	21.6430
863	.0159	.4488	.8817	.3145	.7474	.1802	.6131	.0460	.4788	.9117	.3446	.7774	.6432
866	.0160	.4489	.8818	.3146	.7475	.1804	.6132	.0461	.4790	.9118	.3447	.7776	.6433
869	.0162	.4490	.8819	.3148	.7476	.1805	.6134	.0462	.4791	.9120	.3448	.7777	.6435
872	.0163	.4491	.8820	.3149	.7478	.1806	.6135	.0464	.4792	.9121	.3450	.7779	.6436
432875	16.0164	16.4493	16.8821	17.3150	17.7479	18.1808	18.6136	19.0465	19.4794	19.9123	20.3451	20.7780	21.6438
878	.0165	.4494	.8822	.3151	.7480	.1809	.6138	.0466	.4795	.9124	.3453	.7781	.6439
881	.0166	.4495	.8824	.3152	.7481	.1810	.6139	.0468	.4796	.9125	.3454	.7783	.6441
884	.0167	.4496	.8825	.3154	.7482	.1811	.6140	.0469	.4798	.9127	.3455	.7784	.6442
887	.0168	.4497	.8826	.3155	.7484	.1813	.6141	.0470	.4799	.9128	.3457	.7786	.6444
432890	16.0169	16.4498	16.8827	17.3156	17.7485	18.1814	18.6143	19.0472	19.4801	19.9129	20.3458	20.7787	21.6445
893	.0170	.4499	.8828	.3157	.7486	.1815	.6144	.0473	.4802	.9131	.3460	.7789	.6447
896	.0172	.4500	.8829	.3158	.7487	.1816	.6145	.0474	.4803	.9132	.3461	.7790	.6448
899	.0173	.4502	.8831	.3160	.7489	.1818	.6147	.0476	.4805	.9134	.3463	.7792	.6450
902	.0174	.4503	.8832	.3161	.7490	.1819	.6148	.0477	.4806	.9135	.3464	.7793	.6451
432905	16.0175	16.4504	16.8833	17.3162	17.7491	18.1820	18.6149	19.0478	19.4807	19.9136	20.3465	20.7794	21.6453
908	.0176	.4505	.8834	.3163	.7492	.1821	.6150	.0480	.4809	.9138	.3467	.7796	.6454
911	.0177	.4506	.8835	.3164	.7494	.1823	.6152	.0481	.4810	.9139	.3468	.7797	.6456
914	.0178	.4507	.8836	.3166	.7495	.1824	.6153	.0482	.4811	.9140	.3470	.7799	.6457
917	.0179	.4508	.8838	.3167	.7496	.1825	.6154	.0483	.4813	.9142	.3471	.7800	.6459
432920	16.0180	16.4510	16.8839	17.3168	17.7497	18.1826	18.6156	19.0485	19.4814	19.9143	20.3472	20.7802	21.6460
923	.0182	.4511	.8840	.3169	.7498	.1828	.6157	.0486	.4815	.9145	.3474	.7803	.6462
926	.0183	.4512	.8841	.3170	.7500	.1829	.6158	.0487	.4817	.9146	.3475	.7804	.6463
929	.0184	.4513	.8842	.3172	.7501	.1830	.6159	.0489	.4818	.9147	.3477	.7806	.6465
932	.0185	.4514	.8843	.3173	.7502	.1831	.6161	.0490	.4819	.9149	.3478	.7807	.6466
432935	16.0186	16.4515	16.8845	17.3174	17.7503	18.1833	18.6162	19.0491	19.4821	19.9150	20.3479	20.7809	21.6468
938	.0187	.4516	.8846	.3175	.7505	.1834	.6163	.0493	.4822	.9151	.3481	.7810	.6469
941	.0188	.4518	.8847	.3176	.7506	.1835	.6165	.0494	.4823	.9153	.3482	.7812	.6471
944	.0189	.4519	.8848	.3178	.7507	.1836	.6166	.0495	.4825	.9154	.3484	.7813	.6472
947	.0190	.4520	.8849	.3179	.7508	.1838	.6167	.0497	.4826	.9156	.3485	.7815	.6474
432950	16.0192	16.4521	16.8851	17.3180	17.7510	18.1839	18.6169	19.0498	19.4828	19.9157	20.3487	20.7816	21.6475
953	.0193	.4522	.8852	.3181	.7511	.1840	.6170	.0499	.4829	.9158	.3488	.7817	.6477
956	.0194	.4523	.8853	.3182	.7512	.1842	.6171	.0501	.4830	.9160	.3489	.7819	.6478
959	.0195	.4524	.8854	.3184	.7513	.1843	.6172	.0502	.4832	.9161	.3491	.7820	.6480
962	.0196	.4526	.8855	.3185	.7514	.1844	.6174	.0503	.4833	.9163	.3492	.7822	.6481
432965	16.0197	16.4527	16.8856	17.3186	17.7516	18.1845	18.6175	19.0505	19.4834	19.9164	20.3494	20.7823	21.6483
968	.0198	.4528	.8858	.3187	.7517	.1847	.6176	.0506	.4836	.9165	.3495	.7825	.6484
971	.0199	.4529	.8859	.3188	.7518	.1848	.6178	.0507	.4837	.9167	.3496	.7826	.6486
974	.0200	.4530	.8860	.3190	.7519	.1849	.6179	.0509	.4838	.9168	.3498	.7828	.6487
977	.0201	.4531	.8861	.3191	.7521	.1850	.6180	.0510	.4840	.9169	.3499	.7829	.6489
432980	16.0203	16.4532	16.8862	17.3192	17.7522	18.1852	18.6181	19.0511	19.4841	19.9171	20.3501	20.7830	21.6490
983	.0204	.4534	.8863	.3193	.7523	.1853	.6183	.0513	.4842	.9172	.3502	.7832	.6492
986	.0205	.4535	.8865	.3194	.7524	.1854	.6184	.0514	.4844	.9174	.3503	.7833	.6493
989	.0206	.4536	.8866	.3196	.7525	.1855	.6185	.0515	.4845	.9175	.3505	.7835	.6495
992	.0207	.4537	.8867	.3197	.7527	.1857	.6187	.0516	.4846	.9176	.3506	.7836	.6496
432995	16.0208	16.4538	16.8868	17.3198	17.7528	18.1858	18.6188	19.0518	19.4848	19.9178	20.3508	20.7838	21.6498
998	.0209	.4539	.8869	.3199	.7529	.1859	.6189	.0519	.4849	.9179	.3509	.7839	.6499
433001	.0210	.4540	.8870	.3200	.7530	.1860	.6190	.0520	.4850	.9180	.3510	.7840	.6501
004	.0211	.4542	.8872	.3202	.7532	.1862	.6192	.0522	.4852	.9182	.3512	.7842	.6502
007	.0213	.4543	.8873	.3203	.7533	.1863	.6193	.0523	.4853	.9183	.3513	.7843	.6504
433010	16.0214	16.4544	16.8874	17.3204	17.7534	18.1864	18.6194	19.0524	19.4855	19.9185	20.3515	20.7845	21.6505
013	.0215	.4545	.8875	.3205	.7535	.1865	.6196	.0526	.4856	.9186	.3516	.7846	.6507
016	.0216	.4546	.8876	.3206	.7537	.1867	.6197	.0527	.4857	.9187	.3518	.7848	.6508
019	.0217	.4547	.8877	.3208	.7538	.1868	.6198	.0528	.4859	.9189	.3519	.7849	.6510
022	.0218	.4548	.8879	.3209	.7539	.1869	.6199	.0530	.4860	.9190	.3520	.7851	.6511
433025	16.0219	16.4550	16.8880	17.3210	17.7540	18.1871	18.6201	19.0531	19.4861	19.9192	20.3522	20.7852	21.6513
028	.0220	.4551	.8881	.3211	.7541	.1872	.6202	.0532	.4863	.9193	.3523	.7853	.6514
031	.0221	.4552	.8882	.3212	.7543	.1873	.6203	.0534	.4864	.9194	.3525	.7855	.6516
034	.0223	.4553	.8883	.3214	.7544	.1874	.6205	.0535	.4865	.9196	.3526	.7856	.6517
037	.0224	.4554	.8884	.3215	.7545	.1876	.6206	.0536	.4867	.9197	.3527	.7858	.6519
433040	16.0225	16.4555	16.8886	17.3216	17.7546	18.1877	18.6207	19.0538	19.4868	19.9198	20.3529	20.7859	21.6520
043	.0226	.4556	.8887	.3217	.7548	.1878	.6208	.0539	.4869	.9200	.3530	.7861	.6522
046	.0227	.4557	.8888	.3218	.7549	.1879	.6210	.0540	.4871	.9201	.3532	.7862	.6523
049	.0228	.4559	.8889	.3220	.7550	.1881	.6211	.0542	.4872	.9203	.3533	.7864	.6525
052	.0229	.4560	.8890	.3221	.7551	.1882	.6212	.0543	.4873	.9204	.3534	.7865	.6526
433055	16.0230	16.4561	16.8891	17.3222	17.7553	18.1883	18.6214	19.0544	19.4875	19.9205	20.3536	20.7866	21.6528
058	.0231	.4562	.8893	.3223	.7554	.1884	.6215	.0546	.4876	.9207	.3537	.7868	.6529
061	.0233	.4563	.8894	.3224	.7555	.1886	.6216	.0547	.4877	.9208	.3539	.7869	.6531
064	.0234	.4564	.8895	.3226	.7556	.1887	.6218	.0548	.4879	.9209	.3540	.7871	.6532
067	.0235	.4565	.8896	.3227	.7557	.1888	.6219	.0549	.4880	.9211	.3541	.7872	.6534
433070	16.0236	16.4567	16.8897	17.3228	17.7559	18.1889	18.6220	19.0551	19.4882	19.9212	20.3543	20.7874	21.6535
073	.0237	.4568	.8898	.3229	.7560	.1891	.6221	.0552	.4883	.9214	.3544	.7875	.6537
076	.0238	.4569	.8900	.3230	.7561	.1892	.6223	.0553	.4884	.9215	.3546	.7876	.6538
079	.0239	.4570	.8901	.3232	.7562	.1893	.6224	.0555	.4886	.9216	.3547	.7878	.6540
082	.0240	.4571	.8902	.3233	.7564	.1894	.6225	.0556	.4887	.9218	.3549	.7879	.6541
433085	16.0241	16.4572	16.8903	17.3234	17.7565	18.1896	18.6227	19.0557	19.4888	19.9219	20.3550	20.7881	21.6543
088	.0243	.4573	.8904	.3235	.7566	.1897	.6228	.0559	.4890	.9220	.3551	.7882	.6544
091	.0244	.4575	.8905	.3236	.7567	.1898	.6229	.0560	.4891	.9222	.3553	.7884	.6546
094	.0245	.4576	.8907	.3238	.7569	.1899	.6230	.0561	.4892	.9223	.3554	.7885	.6547
097	.0246	.4577	.8908	.3239	.7570	.1901	.6232	.0563	.4894	.9225	.3556	.7887	.6549
433100	16.0247	16.4578	16.8909	17.3240	17.7571	18.1902	18.6233	19.0564	19.4895	19.9226	20.3557	20.7888	21.6550

MEGACYCLES PER SECOND

HARMONICS

BASIC FREQ.	24	25	26	27	28	29	30	31	32	33	34	35	36
433100	10.3944	10.8275	11.2606	11.6937	12.1268	12.5599	12.9930	13.4261	13.8592	14.2923	14.7254	15.1585	15.5916
103	.3945	.8276	.2607	.6938	.1269	.5600	.9931	.4262	.8593	.2924	.7255	.1586	.5917
106	.3945	.8277	.2608	.6939	.1270	.5601	.9932	.4263	.8594	.2925	.7256	.1587	.5918
109	.3946	.8277	.2608	.6939	.1271	.5602	.9933	.4264	.8595	.2926	.7257	.1588	.5919
112	.3947	.8278	.2609	.6940	.1271	.5602	.9934	.4265	.8596	.2927	.7258	.1589	.5920
433115	10.3948	10.8279	11.2610	11.6941	12.1272	12.5603	12.9935	13.4266	13.8597	14.2928	14.7259	15.1590	15.5921
118	.3948	.8280	.2611	.6942	.1273	.5604	.9935	.4267	.8598	.2929	.7260	.1591	.5922
121	.3949	.8280	.2611	.6943	.1274	.5605	.9936	.4268	.8599	.2930	.7261	.1592	.5924
124	.3950	.8281	.2612	.6943	.1275	.5606	.9937	.4268	.8600	.2931	.7262	.1593	.5925
127	.3950	.8282	.2613	.6944	.1276	.5607	.9938	.4269	.8601	.2932	.7263	.1594	.5926
433130	10.3951	10.8283	11.2614	11.6945	12.1276	12.5608	12.9939	13.4270	13.8602	14.2933	14.7264	15.1596	15.5927
133	.3952	.8283	.2615	.6946	.1277	.5609	.9940	.4271	.8603	.2934	.7265	.1597	.5928
136	.3953	.8284	.2615	.6947	.1278	.5609	.9941	.4272	.8604	.2935	.7266	.1598	.5929
139	.3953	.8285	.2616	.6948	.1279	.5610	.9942	.4273	.8604	.2936	.7267	.1599	.5930
142	.3954	.8286	.2617	.6948	.1280	.5611	.9943	.4274	.8605	.2937	.7268	.1600	.5931
433145	10.3955	10.8286	11.2618	11.6949	12.1281	12.5612	12.9944	13.4275	13.8606	14.2938	14.7269	15.1601	15.5932
148	.3956	.8287	.2618	.6950	.1281	.5613	.9944	.4276	.8607	.2939	.7270	.1602	.5933
151	.3956	.8288	.2619	.6951	.1282	.5614	.9945	.4277	.8608	.2940	.7271	.1603	.5934
154	.3957	.8289	.2620	.6952	.1283	.5615	.9946	.4278	.8609	.2941	.7272	.1604	.5935
157	.3958	.8289	.2621	.6952	.1284	.5616	.9947	.4279	.8610	.2942	.7273	.1605	.5937
433160	10.3958	10.8290	11.2622	11.6953	12.1285	12.5616	12.9948	13.4280	13.8611	14.2943	14.7274	15.1606	15.5938
163	.3959	.8291	.2622	.6954	.1286	.5617	.9949	.4281	.8612	.2944	.7275	.1607	.5939
166	.3960	.8292	.2623	.6955	.1286	.5618	.9950	.4281	.8613	.2945	.7276	.1608	.5940
169	.3961	.8292	.2624	.6956	.1287	.5619	.9951	.4282	.8614	.2946	.7277	.1609	.5941
172	.3961	.8293	.2625	.6956	.1288	.5620	.9952	.4283	.8615	.2947	.7278	.1610	.5942
433175	10.3962	10.8294	11.2626	11.6957	12.1289	12.5621	12.9953	13.4284	13.8616	14.2948	14.7280	15.1611	15.5943
178	.3963	.8295	.2626	.6958	.1290	.5622	.9953	.4285	.8617	.2949	.7281	.1612	.5944
181	.3963	.8295	.2627	.6959	.1291	.5622	.9954	.4286	.8618	.2950	.7282	.1613	.5945
184	.3964	.8296	.2628	.6960	.1292	.5623	.9955	.4287	.8619	.2951	.7283	.1614	.5946
187	.3965	.8297	.2629	.6960	.1292	.5624	.9956	.4288	.8620	.2952	.7284	.1615	.5947
433190	10.3966	10.8298	11.2629	11.6961	12.1293	12.5625	12.9957	13.4289	13.8621	14.2953	14.7285	15.1617	15.5948
193	.3966	.8298	.2630	.6962	.1294	.5626	.9958	.4290	.8622	.2954	.7286	.1618	.5949
196	.3967	.8299	.2631	.6963	.1295	.5627	.9959	.4291	.8623	.2955	.7287	.1619	.5951
199	.3968	.8300	.2632	.6964	.1296	.5628	.9960	.4292	.8624	.2956	.7288	.1620	.5952
202	.3968	.8301	.2633	.6965	.1297	.5629	.9961	.4293	.8625	.2957	.7289	.1621	.5953
433205	10.3969	10.8301	11.2633	11.6965	12.1297	12.5629	12.9962	13.4294	13.8626	14.2958	14.7290	15.1622	15.5954
208	.3970	.8302	.2634	.6966	.1298	.5630	.9962	.4294	.8627	.2959	.7291	.1623	.5955
211	.3971	.8303	.2635	.6967	.1299	.5631	.9963	.4295	.8628	.2960	.7292	.1624	.5956
214	.3971	.8304	.2636	.6968	.1300	.5632	.9964	.4296	.8628	.2961	.7293	.1625	.5957
217	.3972	.8304	.2636	.6969	.1301	.5633	.9965	.4297	.8629	.2962	.7294	.1626	.5958
433220	10.3973	10.8305	11.2637	11.6969	12.1302	12.5634	12.9966	13.4298	13.8630	14.2963	14.7295	15.1627	15.5959
223	.3974	.8306	.2638	.6970	.1302	.5635	.9967	.4299	.8631	.2964	.7296	.1628	.5960
226	.3974	.8307	.2639	.6971	.1303	.5636	.9968	.4300	.8632	.2965	.7297	.1629	.5961
229	.3975	.8307	.2640	.6972	.1304	.5636	.9969	.4301	.8633	.2966	.7298	.1630	.5962
232	.3976	.8308	.2640	.6973	.1305	.5637	.9970	.4302	.8634	.2967	.7299	.1631	.5964
433235	10.3976	10.8309	11.2641	11.6973	12.1306	12.5638	12.9971	13.4303	13.8635	14.2968	14.7300	15.1632	15.5965
238	.3977	.8310	.2642	.6974	.1307	.5639	.9971	.4304	.8636	.2969	.7301	.1633	.5966
241	.3978	.8310	.2643	.6975	.1307	.5640	.9972	.4305	.8637	.2970	.7302	.1634	.5967
244	.3979	.8311	.2643	.6976	.1308	.5641	.9973	.4306	.8638	.2971	.7303	.1635	.5968
247	.3979	.8312	.2644	.6977	.1309	.5642	.9974	.4307	.8639	.2972	.7304	.1636	.5969
433250	10.3980	10.8313	11.2645	11.6978	12.1310	12.5643	12.9975	13.4308	13.8640	14.2973	14.7305	15.1638	15.5970
253	.3981	.8313	.2646	.6978	.1311	.5643	.9976	.4308	.8641	.2973	.7306	.1639	.5971
256	.3981	.8314	.2647	.6979	.1312	.5644	.9977	.4309	.8642	.2974	.7307	.1640	.5972
259	.3982	.8315	.2647	.6980	.1313	.5645	.9978	.4310	.8643	.2975	.7308	.1641	.5973
262	.3983	.8316	.2648	.6981	.1313	.5646	.9979	.4311	.8644	.2976	.7309	.1642	.5974
433265	10.3984	10.8316	11.2649	11.6982	12.1314	12.5647	12.9980	13.4312	13.8645	14.2977	14.7310	15.1643	15.5975
268	.3984	.8317	.2650	.6982	.1315	.5648	.9980	.4313	.8646	.2978	.7311	.1644	.5976
271	.3985	.8318	.2650	.6983	.1316	.5649	.9981	.4314	.8647	.2979	.7312	.1645	.5978
274	.3986	.8319	.2651	.6984	.1317	.5649	.9982	.4315	.8648	.2980	.7313	.1646	.5979
277	.3986	.8319	.2652	.6985	.1318	.5650	.9983	.4316	.8649	.2981	.7314	.1647	.5980
433280	10.3987	10.8320	11.2653	11.6986	12.1318	12.5651	12.9984	13.4317	13.8650	14.2982	14.7315	15.1648	15.5981
283	.3988	.8321	.2654	.6986	.1319	.5652	.9985	.4318	.8651	.2983	.7316	.1649	.5982
286	.3989	.8322	.2654	.6987	.1320	.5653	.9986	.4319	.8652	.2984	.7317	.1650	.5983
289	.3989	.8322	.2655	.6988	.1321	.5654	.9987	.4320	.8652	.2985	.7318	.1651	.5984
292	.3990	.8323	.2656	.6989	.1322	.5655	.9988	.4321	.8653	.2986	.7319	.1652	.5985
433295	10.3991	10.8324	11.2657	11.6990	12.1323	12.5656	12.9989	13.4321	13.8654	14.2987	14.7320	15.1653	15.5986
298	.3992	.8325	.2657	.6990	.1323	.5656	.9989	.4322	.8655	.2988	.7321	.1654	.5987
301	.3992	.8325	.2658	.6991	.1324	.5657	.9990	.4323	.8656	.2989	.7322	.1655	.5988
304	.3993	.8326	.2659	.6992	.1325	.5658	.9991	.4324	.8657	.2990	.7323	.1656	.5989
307	.3994	.8327	.2660	.6993	.1326	.5659	.9992	.4325	.8658	.2991	.7324	.1657	.5991
433310	10.3994	10.8328	11.2661	11.6994	12.1327	12.5660	12.9993	13.4326	13.8659	14.2992	14.7325	15.1659	15.5992
313	.3995	.8328	.2661	.6995	.1328	.5661	.9994	.4327	.8660	.2993	.7326	.1660	.5993
316	.3996	.8329	.2662	.6995	.1328	.5662	.9995	.4328	.8661	.2994	.7327	.1661	.5994
319	.3997	.8330	.2663	.6996	.1329	.5663	.9996	.4329	.8662	.2995	.7328	.1662	.5995
322	.3997	.8331	.2664	.6997	.1330	.5663	.9997	.4330	.8663	.2996	.7329	.1663	.5996
433325	10.3998	10.8331	11.2665	11.6998	12.1331	12.5664	12.9998	13.4331	13.8664	14.2997	14.7331	15.1664	15.5997
328	.3999	.8332	.2665	.6999	.1332	.5665	.9998	.4332	.8665	.2998	.7332	.1665	.5998
331	.3999	.8333	.2666	.6999	.1333	.5666	.9999	.4333	.8666	.2999	.7333	.1666	.5999
334	.4000	.8334	.2667	.7000	.1334	.5667	13.0000	.4334	.8667	.3000	.7334	.1667	.6000
337	.4001	.8334	.2668	.7001	.1334	.5668	.0001	.4334	.8668	.3001	.7335	.1668	.6001
433340	10.4002	10.8335	11.2668	11.7002	12.1335	12.5669	13.0002	13.4335	13.8669	14.3002	14.7336	15.1669	15.6002
343	.4002	.8336	.2669	.7003	.1336	.5669	.0003	.4336	8670	.3003	.7337	.1670	.6003
346	.4003	.8337	.2670	.7003	.1337	.5670	.0004	.4337	.8671	.3004	.7338	.1671	.6005
349	.4004	.8337	.2671	.7004	.1338	.5671	.0005	.4338	.8672	.3005	.7339	.1672	.6006
352	.4004	.8338	.2672	.7005	.1339	.5672	.0006	.4339	.8673	.3006	.7340	.1673	.6007
433355	10.4005	10.8339	11.2672	11.7006	12.1339	12.5673	13.0007	13.4340	13.8674	14.3007	14.7341	15.1674	15.6008
358	.4006	.8340	.2673	.7007	.1340	.5674	.0007	.4341	.8675	.3008	.7342	.1675	.6009
361	.4007	.8340	.2674	.7007	.1341	.5675	.0008	.4342	.8676	.3009	.7343	.1676	.6010
364	.4007	.8341	.2675	.7008	.1342	.5676	.0009	.4343	.8676	.3010	.7344	.1677	.6011
367	.4008	.8342	.2675	.7009	.1343	.5676	.0010	.4344	.8677	.3011	.7345	.1678	.6012
433370	10.4009	10.8343	11.2676	11.7010	12.1344	12.5677	13.0011	13.4345	13.8678	14.3012	14.7346	15.1680	15.6013
373	.4010	.8343	.2677	.7011	.1344	.5678	.0012	.4346	.8679	.3013	.7347	.1681	.6014
376	.4010	.8344	.2678	.7012	.1345	.5679	.0013	.4347	.8680	.3014	.7348	.1682	.6015
379	.4011	.8345	.2679	.7012	.1346	.5680	.0014	.4347	.8681	.3015	.7349	.1683	.6016
382	.4012	.8346	.2679	.7013	.1347	.5681	.0015	.4348	.8682	.3016	.7350	.1684	.6018
433385	10.4012	10.8346	11.2680	11.7014	12.1348	12.5682	13.0016	13.4349	13.8683	14.3017	14.7351	15.1685	15.6019
388	.4013	.8347	.2681	.7015	.1349	.5683	.0016	.4350	.8684	.3018	.7352	.1686	.6020
391	.4014	.8348	.2682	.7016	.1349	.5683	.0017	.4351	.8685	.3019	.7353	.1687	.6021
394	.4015	.8349	.2682	.7016	.1350	.5684	.0018	.4352	.8686	.3020	.7354	.1688	.6022
397	.4015	.8349	.2683	.7017	.1351	.5685	.0019	.4353	.8687	.3021	.7355	.1689	.6023
433400	10.4016	10.8350	11.2684	11.7018	12.1352	12.5686	13.0020	13.4354	13.8688	14.3022	14.7356	15.1690	15.6024

MEGACYCLES PER SECOND

H A R M O N I C S

BASIC FREQ.	37	38	39	40	41	42	43	44	45	46	47	48	50
433100	16.0247	16.4578	16.8909	17.3240	17.7571	18.1902	18.6233	19.0564	19.4895	19.9226	20.3557	20.7888	21.6550
103	.0248	.4579	.8910	.3241	.7572	.1903	.6234	.0565	.4896	.9227	.3558	.7889	.6552
106	.0249	.4580	.8911	.3242	.7573	.1905	.6236	.0567	.4898	.9229	.3560	.7891	.6553
109	.0250	.4581	.8913	.3244	.7575	.1906	.6237	.0568	.4899	.9230	.3561	.7892	.6555
112	.0251	.4583	.8914	.3245	.7576	.1907	.6238	.0569	.4900	.9232	.3563	.7894	.6556
433115	16.0253	16.4584	16.8915	17.3246	17.7577	18.1908	18.6239	19.0571	19.4902	19.9233	20.3564	29.7895	21.6558
118	.0254	.4585	.8916	.3247	.7578	.1910	.6241	.0572	.4903	.9234	.3565	.7897	.6559
121	.0255	.4586	.8917	.3248	.7580	.1911	.6242	.0573	.4904	.9236	.3567	.7898	.6561
124	.0256	.4587	.8918	.3250	.7581	.1912	.6243	.0575	.4906	.9237	.3568	.7900	.6562
127	.0257	.4588	.8920	.3251	.7582	.1913	.6245	.0576	.4907	.9238	.3570	.7901	.6564
433130	16.0258	16.4589	16.8921	17.3252	17.7583	18.1915	18.6246	19.0577	19.4909	19.9240	20.3571	20.7902	21.6565
133	.0259	.4591	.8922	.3253	.7585	.1916	.6247	.0579	.4910	.9241	.3573	.7904	.6567
136	.0260	.4592	.8923	.3254	.7586	.1917	.6248	.0580	.4911	.9243	.3574	.7905	.6568
139	.0261	.4593	.8924	.3256	.7587	.1918	.6250	.0581	.4913	.9244	.3575	.7907	.6570
142	.0263	.4594	.8925	.3257	.7588	.1920	.6251	.0582	.4914	.9245	.3577	.7908	.6571
433145	16.0264	16.4595	16.8927	17.3258	17.7589	18.1921	18.6252	19.0584	19.4915	19.9247	20.3578	20.7910	21.6573
148	.0265	.4596	.8928	.3259	.7591	.1922	.6254	.0585	.4917	.9248	.3580	.7911	.6574
151	.0266	.4597	.8929	.3260	.7592	.1923	.6255	.0586	.4918	.9249	.3581	.7912	.6576
154	.0267	.4599	.8930	.3262	.7593	.1925	.6256	.0588	.4919	.9251	.3582	.7914	.6577
157	.0268	.4600	.8931	.3263	.7594	.1926	.6258	.0589	.4921	.9252	.3584	.7915	.6579
433160	16.0269	16.4601	16.8932	17.3264	17.7596	18.1927	18.6259	19.0590	19.4922	19.9254	20.3585	20.7917	21.6580
163	.0270	.4602	.8934	.3265	.7597	.1928	.6260	.0592	.4923	.9255	.3587	.7918	.6582
166	.0271	.4603	.8935	.3266	.7598	.1930	.6261	.0593	.4925	.9256	.3588	.7920	.6583
169	.0273	.4604	.8936	.3268	.7599	.1931	.6263	.0594	.4926	.9258	.3589	.7921	.6585
172	.0274	.4605	.8937	.3269	.7601	.1932	.6264	.0596	.4927	.9259	.3591	.7923	.6586
433175	16.0275	16.4607	16.8938	17.3270	17.7602	18.1934	18.6265	19.0597	19.4929	19.9261	20.3592	20.7924	21.6588
178	.0276	.4608	.8939	.3271	.7603	.1935	.6267	.0598	.4930	.9262	.3594	.7925	.6589
181	.0277	.4609	.8941	.3272	.7604	.1936	.6268	.0600	.4931	.9263	.3595	.7927	.6591
184	.0278	.4610	.8942	.3274	.7605	.1937	.6269	.0601	.4933	.9265	.3596	.7928	.6592
187	.0279	.4611	.8943	.3275	.7607	.1939	.6270	.0602	.4934	.9266	.3598	.7930	.6594
433190	16.0280	16.4612	16.8944	17.3276	17.7608	18.1940	18.6272	19.0604	19.4936	19.9267	20.3599	20.7931	21.6595
193	.0281	.4613	.8945	.3277	.7609	.1941	.6273	.0605	.4937	.9269	.3601	.7933	.6597
196	.0283	.4614	.8946	.3278	.7610	.1942	.6274	.0606	.4938	.9270	.3602	.7934	.6598
199	.0284	.4616	.8948	.3280	.7612	.1944	.6276	.0608	.4940	.9272	.3604	.7936	.6600
202	.0285	.4617	.8949	.3281	.7613	.1945	.6277	.0609	.4941	.9273	.3605	.7937	.6601
433205	16.0286	16.4618	16.8950	17.3282	17.7614	18.1946	18.6278	19.0610	19.4942	19.9274	20.3606	20.7938	21.6603
208	.0287	.4619	.8951	.3283	.7615	.1947	.6279	.0612	.4944	.9276	.3608	.7940	.6604
211	.0288	.4620	.8952	.3284	.7617	.1949	.6281	.0613	.4945	.9277	.3609	.7941	.6606
214	.0289	.4621	.8953	.3286	.7618	.1950	.6282	.0614	.4946	.9278	.3611	.7943	.6607
217	.0290	.4622	.8955	.3287	.7619	.1951	.6283	.0615	.4948	.9280	.3612	.7944	.6609
433220	16.0291	16.4624	16.8956	17.3288	17.7620	18.1952	18.6285	19.0617	19.4949	19.9281	20.3613	20.7946	21.6610
223	.0293	.4625	.8957	.3289	.7621	.1954	.6286	.0618	.4950	.9283	.3615	.7947	.6612
226	.0294	.4626	.8958	.3290	.7623	.1955	.6287	.0619	.4952	.9284	.3616	.7948	.6613
229	.0295	.4627	.8959	.3292	.7624	.1956	.6288	.0621	.4953	.9285	.3618	.7950	.6615
232	.0296	.4628	.8960	.3293	.7625	.1957	.6290	.0622	.4954	.9287	.3619	.7951	.6616
433235	16.0297	16.4629	16.8962	17.3294	17.7626	18.1959	18.6291	19.0623	19.4956	19.9288	20.3620	20.7953	21.6618
238	.0298	.4630	.8963	.3295	.7628	.1960	.6292	.0625	.4957	.9289	.3622	.7954	.6619
241	.0299	.4632	.8964	.3296	.7629	.1961	.6294	.0626	.4958	.9291	.3623	.7956	.6621
244	.0300	.4633	.8965	.3298	.7630	.1962	.6295	.0627	.4960	.9292	.3625	.7957	.6622
247	.0301	.4634	.8966	.3299	.7631	.1964	.6296	.0629	.4961	.9294	.3626	.7959	.6624
433250	16.0303	16.4635	16.8968	17.3300	17.7633	18.1965	18.6298	19.0630	19.4963	19.9295	20.3628	20.7960	21.6625
253	.0304	.4636	.8969	.3301	.7634	.1966	.6299	.0631	.4964	.9296	.3629	.7961	.6627
256	.0305	.4637	.8970	.3302	.7635	.1968	.6300	.0633	.4965	.9298	.3630	.7963	.6628
259	.0306	.4638	.8971	.3304	.7636	.1969	.6301	.0634	.4967	.9299	.3632	.7964	.6630
262	.0307	.4640	.8972	.3305	.7637	.1970	.6303	.0635	.4968	.9301	.3633	.7966	.6631
433265	16.0308	16.4641	16.8973	17.3306	17.7639	18.1971	18.6304	19.0637	19.4969	19.9302	20.3635	20.7967	21.6633
268	.0309	.4642	.8975	.3307	.7640	.1973	.6305	.0638	.4971	.9303	.3636	.7969	.6634
271	.0310	.4643	.8976	.3308	.7641	.1974	.6307	.0639	.4972	.9305	.3637	.7970	.6636
274	.0311	.4644	.8977	.3310	.7642	.1975	.6308	.0641	.4973	.9306	.3639	.7972	.6637
277	.0312	.4645	.8978	.3311	.7644	.1976	.6309	.0642	.4975	.9307	.3640	.7973	.6639
433280	16.0314	16.4646	16.8979	17.3312	17.7645	18.1978	18.6310	19.0643	19.4976	19.9309	20.3642	20.7974	21.6640
283	.0315	.4648	.8980	.3313	.7646	.1979	.6312	.0645	.4977	.9310	.3643	.7976	.6642
286	.0316	.4649	.8982	.3314	.7647	.1980	.6313	.0646	.4979	.9312	.3644	.7977	.6643
289	.0317	.4650	.8983	.3316	.7648	.1981	.6314	.0647	.4980	.9313	.3646	.7979	.6645
292	.0318	.4651	.8984	.3317	.7650	.1983	.6316	.0648	.4981	.9314	.3647	.7980	.6646
433295	16.0319	16.4652	16.8985	17.3318	17.7651	18.1984	18.6317	19.0650	19.4983	19.9316	20.3649	20.7982	21.6648
298	.0320	.4653	.8986	.3319	.7652	.1985	.6318	.0651	.4984	.9317	.3650	.7983	.6649
301	.0321	.4654	.8987	.3320	.7653	.1986	.6319	.0652	.4985	.9318	.3651	.7984	.6651
304	.0322	.4656	.8989	.3322	.7655	.1988	.6321	.0654	.4987	.9320	.3653	.7986	.6652
307	.0324	.4657	.8990	.3323	.7656	.1989	.6322	.0655	.4988	.9321	.3654	.7987	.6654
433310	16.0325	16.4658	16.8991	17.3324	17.7657	18.1990	18.6323	19.0656	19.4990	19.9323	20.3656	20.7989	21.6655
313	.0326	.4659	.8992	.3325	.7658	.1991	.6325	.0658	.4991	.9324	.3657	.7990	.6657
316	.0327	.4660	.8993	.3326	.7660	.1993	.6326	.0659	.4992	.9325	.3659	.7992	.6658
319	.0328	.4661	.8994	.3328	.7661	.1994	.6327	.0660	.4994	.9327	.3660	.7993	.6660
322	.0329	.4662	.8996	.3329	.7662	.1995	.6328	.0662	.4995	.9328	.3661	.7995	.6661
433325	16.0330	16.4664	16.8997	17.3330	17.7663	18.1997	18.6330	19.0663	19.4996	19.9330	20.3663	20.7996	21.6663
328	.0331	.4665	.8998	.3331	.7664	.1998	.6331	.0664	.4998	.9331	.3664	.7997	.6664
331	.0332	.4666	.8999	.3332	.7666	.1999	.6332	.0666	.4999	.9332	.3666	.7999	.6666
334	.0334	.4667	.9000	.3334	.7667	.2000	.6334	.0667	.5000	.9334	.3667	.8000	.6667
337	.0335	.4668	.9001	.3335	.7668	.2002	.6335	.0668	.5002	.9335	.3668	.8002	.6669
433340	16.0336	16.4669	16.9003	17.3336	17.7669	18.2003	18.6336	19.0670	19.5003	19.9336	20.3670	20.8003	21.6670
343	.0337	.4670	.9004	.3337	.7671	.2004	.6337	.0671	.5004	.9338	.3671	.8005	.6672
346	.0338	.4671	.9005	.3338	.7672	.2005	.6339	.0672	.5006	.9339	.3673	.8006	.6673
349	.0339	.4673	.9006	.3340	.7673	.2007	.6340	.0674	.5007	.9341	.3674	.8008	.6675
352	.0340	.4674	.9007	.3341	.7674	.2008	.6341	.0675	.5008	.9342	.3675	.8009	.6676
433355	16.0341	16.4675	16.9008	17.3342	17.7676	18.2009	18.6343	19.0676	19.5010	19.9343	20.3677	20.8010	21.6678
358	.0342	.4676	.9010	.3343	.7677	.2010	.6344	.0678	.5011	.9345	.3678	.8012	.6679
361	.0344	.4677	.9011	.3344	.7678	.2012	.6345	.0679	.5012	.9346	.3680	.8013	.6681
364	.0345	.4678	.9012	.3346	.7679	.2013	.6347	.0680	.5014	.9347	.3681	.8015	.6682
367	.0346	.4679	.9013	.3347	.7680	.2014	.6348	.0681	.5015	.9349	.3682	.8016	.6684
433370	16.0347	16.4681	16.9014	17.3348	17.7682	18.2015	18.6349	19.0683	19.5017	19.9350	20.3684	20.8018	21.6685
373	.0348	.4682	.9015	.3349	.7683	.2017	.6350	.0684	.5018	.9352	.3685	.8019	.6687
376	.0349	.4683	.9017	.3350	.7684	.2018	.6352	.0685	.5019	.9353	.3687	.8020	.6688
379	.0350	.4684	.9018	.3352	.7685	.2019	.6353	.0687	.5021	.9354	.3688	.8022	.6690
382	.0351	.4685	.9019	.3353	.7687	.2020	.6354	.0688	.5022	.9356	.3690	.8023	.6691
433385	16.0352	16.4686	16.9020	17.3354	17.7688	18.2022	18.6356	19.0689	19.5023	19.9357	20.3691	20.8025	21.6693
388	.0354	.4687	.9021	.3355	.7689	.2023	.6357	.0691	.5025	.9358	.3692	.8026	.6694
391	.0355	.4689	.9022	.3356	.7690	.2024	.6358	.0692	.5026	.9360	.3694	.8028	.6696
394	.0356	.4690	.9024	.3358	.7692	.2025	.6359	.0693	.5027	.9361	.3695	.8029	.6697
397	.0357	.4691	.9025	.3359	.7693	.2027	.6361	.0695	.5029	.9363	.3697	.8031	.6699
433400	16.0358	16.4692	16.9026	17.3360	17.7694	18.2028	18.6362	19.0696	19.5030	19.9364	20.3698	20.8032	21.6700

H A R M O N I C S

BASIC FREQ.	24	25	26	27	28	29	30	31	32	33	34	35	36
433400	10.4016	10.8350	11.2684	11.7018	12.1352	12.5686	13.0020	13.4354	13.8688	14.3022	14.7356	15.1690	15.6024
403	.4017	.8351	.2685	.7019	.1353	.5687	.0021	.4355	.8689	.3023	.7357	.1691	.6025
406	.4017	.8352	.2686	.7020	.1354	.5688	.0022	.4356	.8690	.3024	.7358	.1692	.6026
409	.4018	.8352	.2686	.7020	.1355	.5689	.0023	.4357	.8691	.3025	.7359	.1693	.6027
412	.4019	.8353	.2687	.7021	.1355	.5689	.0024	.4358	.8692	.3026	.7360	.1694	.6028
433415	10.4020	10.8354	11.2688	11.7022	12.1356	12.5690	13.0025	13.4359	13.8693	14.3027	14.7361	15.1695	15.6029
418	.4020	.8355	.2689	.7023	.1357	.5691	.0025	.4360	.8694	.3028	.7362	.1696	.6030
421	.4021	.8355	.2689	.7024	.1358	.5692	.0026	.4361	.8695	.3029	.7363	.1697	.6032
424	.4022	.8356	.2690	.7024	.1359	.5693	.0027	.4361	.8696	.3030	.7364	.1698	.6033
427	.4022	.8357	.2691	.7025	.1360	.5694	.0028	.4362	.8697	.3031	.7365	.1699	.6034
433430	10.4023	10.8358	11.2692	11.7026	12.1360	12.5695	13.0029	13.4363	13.8698	14.3032	14.7366	15.1701	15.6035
433	.4024	.8358	.2693	.7027	.1361	.5696	.0030	.4364	.8699	.3033	.7367	.1702	.6036
436	.4025	.8359	.2693	.7028	.1362	.5696	.0031	.4365	.8700	.3034	.7368	.1703	.6037
439	.4025	.8360	.2694	.7029	.1363	.5697	.0032	.4366	.8700	.3035	.7369	.1704	.6038
442	.4026	.8361	.2695	.7029	.1364	.5698	.0033	.4367	.8701	.3036	.7370	.1705	.6039
433445	10.4027	10.8361	11.2696	11.7030	12.1365	12.5699	13.0034	13.4368	13.8702	14.3037	14.7371	15.1706	15.6040
448	.4028	.8362	.2696	.7031	.1365	.5700	.0034	.4369	.8703	.3038	.7372	.1707	.6041
451	.4028	.8363	.2697	.7032	.1366	.5701	.0035	.4370	.8704	.3039	.7373	.1708	.6042
454	.4029	.8364	.2698	.7033	.1367	.5702	.0036	.4371	.8705	.3040	.7374	.1709	.6043
457	.4030	.8364	.2699	.7033	.1368	.5703	.0037	.4372	.8706	.3041	.7375	.1710	.6045
433460	10.4030	10.8365	11.2700	11.7034	12.1369	12.5703	13.0038	13.4373	13.8707	14.3042	14.7376	15.1711	15.6046
463	.4031	.8366	.2700	.7035	.1370	.5704	.0039	.4374	.8708	.3043	.7377	.1712	.6047
466	.4032	.8367	.2701	.7036	.1370	.5705	.0040	.4374	.8709	.3044	.7378	.1713	.6048
469	.4033	.8367	.2702	.7037	.1371	.5706	.0041	.4375	.8710	.3045	.7379	.1714	.6049
472	.4033	.8368	.2703	.7037	.1372	.5707	.0042	.4376	.8711	.3046	.7380	.1715	.6050
433475	10.4034	10.8369	11.2704	11.7038	12.1373	12.5708	13.0043	13.4377	13.8712	14.3047	14.7382	15.1716	15.6051
478	.4035	.8370	.2704	.7039	.1374	.5709	.0043	.4378	.8713	.3048	.7383	.1717	.6052
481	.4035	.8370	.2705	.7040	.1375	.5709	.0044	.4379	.8714	.3049	.7384	.1718	.6053
484	.4036	.8371	.2706	.7041	.1376	.5710	.0045	.4380	.8715	.3050	.7385	.1719	.6054
487	.4037	.8372	.2707	.7041	.1376	.5711	.0046	.4381	.8716	.3051	.7386	.1720	.6055
433490	10.4038	10.8373	11.2707	11.7042	12.1377	12.5712	13.0047	13.4382	13.8717	14.3052	14.7387	15.1722	15.6056
493	.4038	.8373	.2708	.7043	.1378	.5713	.0048	.4383	.8718	.3053	.7388	.1723	.6057
496	.4039	.8374	.2709	.7044	.1379	.5714	.0049	.4384	.8719	.3054	.7389	.1724	.6059
499	.4040	.8375	.2710	.7045	.1380	.5715	.0050	.4385	.8720	.3055	.7390	.1725	.6060
502	.4040	.8376	.2711	.7046	.1381	.5716	.0051	.4386	.8721	.3056	.7391	.1726	.6061
433505	10.4041	10.8376	11.2711	11.7046	12.1381	12.5716	13.0052	13.4387	13.8722	14.3057	14.7392	15.1727	15.6062
508	.4042	.8377	.2712	.7047	.1382	.5717	.0052	.4387	.8723	.3058	.7393	.1728	.6063
511	.4043	.8378	.2713	.7048	.1383	.5718	.0053	.4388	.8724	.3059	.7394	.1729	.6064
514	.4043	.8379	.2714	.7049	.1384	.5719	.0054	.4389	.8724	.3060	.7395	.1730	.6065
517	.4044	.8379	.2714	.7050	.1385	.5720	.0055	.4390	.8725	.3061	.7396	.1731	.6066
433520	10.4045	10.8380	11.2715	11.7050	12.1386	12.5721	13.0056	13.4391	13.8726	14.3062	14.7397	15.1732	15.6067
523	.4046	.8381	.2716	.7051	.1386	.5722	.0057	.4392	.8727	.3063	.7398	.1733	.6068
526	.4046	.8382	.2717	.7052	.1387	.5723	.0058	.4393	.8728	.3064	.7399	.1734	.6069
529	.4047	.8382	.2718	.7053	.1388	.5723	.0059	.4394	.8729	.3065	.7400	.1735	.6070
532	.4048	.8383	.2718	.7054	.1389	.5724	.0060	.4395	.8730	.3066	.7401	.1736	.6072
433535	10.4048	10.8384	11.2719	11.7054	12.1390	12.5725	13.0061	13.4396	13.8731	14.3067	14.7402	15.1737	15.6073
538	.4049	.8385	.2720	.7055	.1391	.5726	.0061	.4397	.8732	.3068	.7403	.1738	.6074
541	.4050	.8385	.2721	.7056	.1391	.5727	.0062	.4398	.8733	.3069	.7404	.1739	.6075
544	.4051	.8386	.2721	.7057	.1392	.5728	.0063	.4399	.8734	.3070	.7405	.1740	.6076
547	.4051	.8387	.2722	.7058	.1393	.5729	.0064	.4400	.8735	.3071	.7406	.1741	.6077
433550	10.4052	10.8388	11.2723	11.7059	12.1394	12.5730	13.0065	13.4401	13.8736	14.3072	14.7407	15.1743	15.6078
553	.4053	.8388	.2724	.7059	.1395	.5730	.0066	.4401	.8737	.3072	.7408	.1744	.6079
556	.4053	.8389	.2725	.7060	.1396	.5731	.0067	.4402	.8738	.3073	.7409	.1745	.6080
559	.4054	.8390	.2725	.7061	.1397	.5732	.0068	.4403	.8739	.3074	.7410	.1746	.6081
562	.4055	.8391	.2726	.7062	.1397	.5733	.0069	.4404	.8740	.3075	.7411	.1747	.6082
433565	10.4056	10.8391	11.2727	11.7063	12.1398	12.5734	13.0070	13.4405	13.8741	14.3076	14.7412	15.1748	15.6083
568	.4056	.8392	.2728	.7063	.1399	.5735	.0070	.4406	.8742	.3077	.7413	.1749	.6084
571	.4057	.8393	.2728	.7064	.1400	.5736	.0071	.4407	.8743	.3078	.7414	.1750	.6086
574	.4058	.8394	.2729	.7065	.1401	.5736	.0072	.4408	.8744	.3079	.7415	.1751	.6087
577	.4058	.8394	.2730	.7066	.1402	.5737	.0073	.4409	.8745	.3080	.7416	.1752	.6088
433580	10.4059	10.8395	11.2731	11.7067	12.1402	12.5738	13.0074	13.4410	13.8746	14.3081	14.7417	15.1753	15.6089
583	.4060	.8396	.2732	.7067	.1403	.5739	.0075	.4411	.8747	.3082	.7418	.1754	.6090
586	.4061	.8397	.2732	.7068	.1404	.5740	.0076	.4412	.8748	.3083	.7419	.1755	.6091
589	.4061	.8397	.2733	.7069	.1405	.5741	.0077	.4413	.8748	.3084	.7420	.1756	.6092
592	.4062	.8398	.2734	.7070	.1406	.5742	.0078	.4414	.8749	.3085	.7421	.1757	.6093
433595	10.4063	10.8399	11.2735	11.7071	12.1407	12.5743	13.0079	13.4414	13.8750	14.3086	14.7422	15.1758	15.6094
598	.4064	.8400	.2735	.7071	.1407	.5743	.0079	.4415	.8751	.3087	.7423	.1759	.6095
601	.4064	.8400	.2736	.7072	.1408	.5744	.0080	.4416	.8752	.3088	.7424	.1760	.6096
604	.4065	.8401	.2737	.7073	.1409	.5745	.0081	.4417	.8753	.3089	.7425	.1761	.6097
607	.4066	.8402	.2738	.7074	.1410	.5746	.0082	.4418	.8754	.3090	.7426	.1762	.6099
433610	10.4066	10.8403	11.2739	11.7065	12.1411	12.5747	13.0083	13.4419	13.8755	14.3091	14.7427	15.1764	15.6100
613	.4067	.8403	.2739	.7076	.1412	.5748	.0084	.4420	.8756	.3092	.7428	.1765	.6101
616	.4068	.8404	.2740	.7076	.1412	.5749	.0085	.4421	.8757	.3093	.7429	.1766	.6102
619	.4069	.8405	.2741	.7077	.1413	.5750	.0086	.4422	.8758	.3094	.7430	.1767	.6103
622	.4069	.8406	.2742	.7078	.1414	.5750	.0087	.4423	.8759	.3095	.7431	.1768	.6104
433625	10.4070	10.8406	11.2743	11.7079	12.1415	12.5751	13.0088	13.4424	13.8760	14.3096	14.7433	15.1769	15.6105
628	.4071	.8407	.2743	.7080	.1416	.5752	.0088	.4425	.8761	.3097	.7434	.1770	.6106
631	.4071	.8408	.2744	.7080	.1417	.5753	.0089	.4426	.8762	.3098	.7435	.1771	.6107
634	.4072	.8409	.2745	.7081	.1418	.5754	.0090	.4427	.8763	.3099	.7436	.1772	.6108
637	.4073	.8409	.2746	.7082	.1418	.5755	.0091	.4427	.8764	.3100	.7437	.1773	.6109
433640	10.4074	10.8410	11.2746	11.7083	12.1419	12.5756	13.0092	13.4428	13.8765	14.3101	14.7438	15.1774	15.6110
643	.4074	.8411	.2747	.7084	.1420	.5756	.0093	.4429	.8766	.3102	.7439	.1775	.6111
646	.4075	.8412	.2748	.7084	.1421	.5757	.0094	.4430	.8767	.3103	.7440	.1776	.6113
649	.4076	.8412	.2749	.7085	.1422	.5758	.0095	.4431	.8768	.3104	.7441	.1777	.6114
652	.4076	.8413	.2750	.7086	.1423	.5759	.0096	.4432	.8769	.3105	.7442	.1778	.6115
433655	10.4077	10.8414	11.2750	11.7087	12.1423	12.5760	13.0097	13.4433	13.8770	14.3106	14.7443	15.1779	15.6116
658	.4078	.8415	.2751	.7088	.1424	.5761	.0097	.4434	.8771	.3107	.7444	.1780	.6117
661	.4079	.8415	.2752	.7088	.1425	.5762	.0098	.4435	.8772	.3108	.7445	.1781	.6118
664	.4079	.8416	.2753	.7089	.1426	.5763	.0099	.4436	.8772	.3109	.7446	.1782	.6119
667	.4080	.8417	.2753	.7090	.1427	.5763	.0100	.4437	.8773	.3110	.7447	.1783	.6120
433670	10.4081	10.8418	11.2754	11.7091	12.1428	12.5764	13.0101	13.4438	13.8774	14.3111	14.7448	15.1785	15.6121
673	.4082	.8418	.2755	.7092	.1428	.5765	.0102	.4439	.8775	.3112	.7449	.1786	.6122
676	.4082	.8419	.2756	.7093	.1429	.5766	.0103	.4440	.8776	.3113	.7450	.1787	.6123
679	.4083	.8420	.2757	.7093	.1430	.5767	.0104	.4440	.8777	.3114	.7451	.1788	.6124
682	.4084	.8421	.2757	.7094	.1431	.5768	.0105	.4441	.8778	.3115	.7452	.1789	.6126
433685	10.4084	10.8421	11.2758	11.7095	12.1432	12.5769	13.0106	13.4442	13.8779	14.3116	14.7453	15.1790	15.6127
688	.4085	.8422	.2759	.7096	.1433	.5770	.0106	.4443	.8780	.3117	.7454	.1791	.6128
691	.4086	.8423	.2760	.7097	.1433	.5770	.0107	.4444	.8781	.3118	.7455	.1792	.6129
694	.4087	.8424	.2760	.7097	.1434	.5771	.0108	.4445	.8782	.3119	.7456	.1793	.6130
697	.4087	.8424	.2761	.7098	.1435	.5772	.0109	.4446	.8783	.3120	.7457	.1794	.6131
433700	10.4088	10.8425	11.2762	11.7099	12.1436	12.5773	13.0110	13.4447	13.8784	14.3121	14.7458	15.1795	15.6132

MEGACYCLES PER SECOND

H A R M O N I C S

BASIC FREQ.	37	38	39	40	41	42	43	44	45	46	47	48	50
433400	16.0358	16.4692	16.9026	17.3360	17.7694	18.2028	18.6362	19.0696	19.5030	19.9364	20.3698	20.8032	21.6700
403	.0359	.4693	.9027	.3361	.7695	.2029	.6363	.0697	.5031	.9365	.3699	.8033	.6702
406	.0360	.4694	.9028	.3362	.7696	.2031	.6365	.0699	.5033	.9367	.3701	.8035	.6703
409	.0361	.4695	.9030	.3364	.7698	.2032	.6366	.0700	.5034	.9368	.3702	.8036	.6705
412	.0362	.4697	.9031	.3365	.7699	.2033	.6367	.0701	.5035	.9370	.3704	.8038	.6706
433415	16.0364	16.4698	16.9032	17.3366	17.7700	18.2034	18.6368	19.0703	19.5037	19.9371	20.3705	20.8039	21.6708
418	.0365	.4699	.9033	.3367	.7701	.2036	.6370	.0704	.5038	.9372	.3706	.8041	.6709
421	.0366	.4700	.9034	.3368	.7703	.2037	.6371	.0705	.5039	.9374	.3708	.8042	.6711
424	.0367	.4701	.9035	.3370	.7704	.2038	.6372	.0707	.5041	.9375	.3709	.8044	.6712
427	.0368	.4702	.9037	.3371	.7705	.2039	.6374	.0708	.5042	.9376	.3711	.8045	.6714
433430	16.0369	16.4703	16.9038	17.3372	17.7706	18.2041	18.6375	19.0709	19.5044	19.9378	20.3712	20.8046	21.6715
433	.0370	.4705	.9039	.3373	.7708	.2042	.6376	.0711	.5045	.9379	.3714	.8048	.6717
436	.0371	.4706	.9040	.3374	.7709	.2043	.6377	.0712	.5046	.9381	.3715	.8049	.6718
439	.0372	.4707	.9041	.3376	.7710	.2044	.6379	.0713	.5048	.9382	.3716	.8051	.6720
442	.0374	.4708	.9042	.3377	.7711	.2046	.6380	.0714	.5049	.9383	.3718	.8052	.6721
433445	16.0375	16.4709	16.9044	17.3378	17.7712	18.2047	18.6381	19.0716	19.5050	19.9385	20.3719	20.8054	21.6723
448	.0376	.4710	.9045	.3379	.7714	.2048	.6383	.0717	.5052	.9386	.3721	.8055	.6724
451	.0377	.4711	.9046	.3380	.7715	.2049	.6384	.0718	.5053	.9387	.3722	.8056	.6726
454	.0378	.4713	.9047	.3382	.7716	.2051	.6385	.0720	.5054	.9389	.3723	.8058	.6727
457	.0379	.4714	.9048	.3383	.7717	.2052	.6387	.0721	.5056	.9390	.3725	.8059	.6729
433460	16.0380	16.4715	16.9049	17.3384	17.7719	18.2053	18.6388	19.0722	19.5057	19.9392	20.3726	20.8061	21.6730
463	.0381	.4716	.9051	.3385	.7720	.2054	.6389	.0724	.5058	.9393	.3728	.8062	.6732
466	.0382	.4717	.9052	.3386	.7721	.2056	.6390	.0725	.5060	.9394	.3729	.8064	.6733
469	.0384	.4718	.9053	.3388	.7722	.2057	.6392	.0726	.5061	.9396	.3730	.8065	.6735
472	.0385	.4719	.9054	.3389	.7724	.2058	.6393	.0728	.5062	.9397	.3732	.8067	.6736
433475	16.0386	16.4721	16.9055	17.3390	17.7725	18.2060	18.6394	19.0729	19.5064	19.9399	20.3733	20.8068	21.6738
478	.0387	.4722	.9056	.3391	.7726	.2061	.6396	.0730	.5065	.9400	.3735	.8069	.6739
481	.0388	.4723	.9058	.3392	.7727	.2062	.6397	.0732	.5066	.9401	.3736	.8071	.6741
484	.0389	.4724	.9059	.3394	.7728	.2063	.6398	.0733	.5068	.9403	.3737	.8072	.6742
487	.0390	.4725	.9060	.3395	.7730	.2065	.6399	.0734	.5069	.9404	.3739	.8074	.6744
433490	16.0391	16.4726	16.9061	17.3396	17.7731	18.2066	18.6401	19.0736	19.5071	19.9405	20.3740	20.8075	21.6745
493	.0392	.4727	.9062	.3397	.7732	.2067	.6402	.0737	.5072	.9407	.3742	.8077	.6747
496	.0394	.4728	.9063	.3398	.7733	.2068	.6403	.0738	.5073	.9408	.3743	.8078	.6748
499	.0395	.4730	.9065	.3400	.7735	.2070	.6405	.0740	.5075	.9410	.3745	.8080	.6750
502	.0396	.4731	.9066	.3401	.7736	.2071	.6406	.0741	.5076	.9411	.3746	.8081	.6751
433505	16.0397	16.4732	16.9067	17.3402	17.7737	18.2072	18.6407	19.0742	19.5077	19.9412	20.3747	20.8082	21.6753
508	.0398	.4733	.9068	.3403	.7738	.2073	.6408	.0744	.5079	.9414	.3749	.8084	.6754
511	.0399	.4734	.9069	.3404	.7740	.2075	.6410	.0745	.5080	.9415	.3750	.8085	.6756
514	.0400	.4735	.9070	.3406	.7741	.2076	.6411	.0746	.5081	.9416	.3752	.8087	.6757
517	.0401	.4736	.9072	.3407	.7742	.2077	.6412	.0747	.5083	.9418	.3753	.8088	.6759
433520	16.0402	16.4738	16.9073	17.3408	17.7743	18.2078	18.6414	19.0749	19.5084	19.9419	20.3754	20.8090	21.6760
523	.0404	.4739	.9074	.3409	.7744	.2080	.6415	.0750	.5085	.9421	.3756	.8091	.6762
526	.0405	.4740	.9075	.3410	.7746	.2081	.6416	.0751	.5087	.9422	.3757	.8092	.6763
529	.0406	.4741	.9076	.3412	.7747	.2082	.6417	.0753	.5088	.9423	.3759	.8094	.6765
532	.0407	.4742	.9077	.3413	.7748	.2083	.6419	.0754	.5089	.9425	.3760	.8095	.6766
433535	16.0408	16.4743	16.9079	17.3414	17.7749	18.2085	18.6420	19.0755	19.5091	19.9426	20.3761	20.8097	21.6768
538	.0409	.4744	.9080	.3415	.7751	.2086	.6421	.0757	.5092	.9427	.3763	.8098	.6769
541	.0410	.4746	.9081	.3416	.7752	.2087	.6423	.0758	.5093	.9429	.3764	.8100	.6771
544	.0411	.4747	.9082	.3418	.7753	.2088	.6424	.0759	.5095	.9430	.3766	.8101	.6772
547	.0412	.4748	.9083	.3419	.7754	.2090	.6425	.0761	.5096	.9432	.3767	.8103	.6774
433550	16.0414	16.4749	16.9085	17.3420	17.7756	18.2091	18.6427	19.0762	19.5098	19.9433	20.3769	20.8104	21.6775
553	.0415	.4750	.9086	.3421	.7757	.2092	.6428	.0763	.5099	.9434	.3770	.8105	.6777
556	.0416	.4751	.9087	.3422	.7758	.2094	.6429	.0765	.5100	.9436	.3771	.8107	.6778
559	.0417	.4752	.9088	.3424	.7759	.2095	.6430	.0766	.5102	.9437	.3773	.8108	.6780
562	.0418	.4754	.9089	.3425	.7760	.2096	.6432	.0767	.5103	.9439	.3774	.8110	.6781
433565	16.0419	16.4755	16.9090	17.3426	17.7762	18.2097	18.6433	19.0769	19.5104	19.9440	20.3776	20.8111	21.6783
568	.0420	.4756	.9092	.3427	.7763	.2099	.6434	.0770	.5106	.9441	.3777	.8113	.6784
571	.0421	.4757	.9093	.3428	.7764	.2100	.6436	.0771	.5107	.9443	.3778	.8114	.6786
574	.0422	.4758	.9094	.3430	.7765	.2101	.6437	.0773	.5108	.9444	.3780	.8116	.6787
577	.0423	.4759	.9095	.3431	.7767	.2102	.6438	.0774	.5110	.9445	.3781	.8117	.6789
433580	16.0425	16.4760	16.9096	17.3432	17.7768	18.2104	18.6439	19.0775	19.5111	19.9447	20.3783	20.8118	21.6790
583	.0426	.4762	.9097	.3433	.7769	.2105	.6441	.0777	.5112	.9448	.3784	.8120	.6792
586	.0427	.4763	.9099	.3434	.7770	.2106	.6442	.0778	.5114	.9450	.3785	.8121	.6793
589	.0428	.4764	.9100	.3436	.7771	.2107	.6443	.0779	.5115	.9451	.3787	.8123	.6795
592	.0429	.4765	.9101	.3437	.7773	.2109	.6445	.0780	.5116	.9452	.3788	.8124	.6796
433595	16.0430	16.4766	16.9102	17.3438	17.7774	18.2110	18.6446	19.0782	19.5118	19.9454	20.3790	20.8126	21.6798
598	.0431	.4767	.9103	.3439	.7775	.2111	.6447	.0783	.5119	.9455	.3791	.8127	.6799
601	.0432	.4768	.9104	.3440	.7776	.2112	.6448	.0784	.5120	.9456	.3792	.8128	.6801
604	.0433	.4770	.9106	.3442	.7778	.2114	.6450	.0786	.5122	.9458	.3794	.8130	.6802
607	.0435	.4771	.9107	.3443	.7779	.2115	.6451	.0787	.5123	.9459	.3795	.8131	.6804
433610	16.0436	16.4772	16.9108	17.3444	17.7780	18.2116	18.6452	19.0788	19.5125	19.9461	20.3797	20.8133	21.6805
613	.0437	.4773	.9109	.3445	.7781	.2117	.6454	.0790	.5126	.9462	.3798	.8134	.6807
616	.0438	.4774	.9110	.3446	.7783	.2119	.6455	.0791	.5127	.9463	.3800	.8136	.6808
619	.0439	.4775	.9111	.3448	.7784	.2120	.6456	.0792	.5129	.9465	.3801	.8137	.6810
622	.0440	.4776	.9113	.3449	.7785	.2121	.6457	.0794	.5130	.9466	.3802	.8139	.6811
433625	16.0441	16.4778	16.9114	17.3450	17.7786	18.2123	18.6459	19.0795	19.5131	19.9468	20.3804	20.8140	21.6813
628	.0442	.4779	.9115	.3451	.7787	.2124	.6460	.0796	.5133	.9469	.3805	.8141	.6814
631	.0443	.4780	.9116	.3452	.7789	.2125	.6461	.0798	.5134	.9470	.3807	.8143	.6816
634	.0445	.4781	.9117	.3454	.7790	.2126	.6463	.0799	.5135	.9472	.3808	.8144	.6817
637	.0446	.4782	.9118	.3455	.7791	.2128	.6464	.0800	.5137	.9473	.3809	.8146	.6819
433640	16.0447	16.4783	16.9120	17.3456	17.7792	18.2129	18.6465	19.0802	19.5138	19.9474	20.3811	20.8147	21.6820
643	.0448	.4784	.9121	.3457	.7794	.2130	.6466	.0803	.5139	.9476	.3812	.8149	.6822
646	.0449	.4785	.9122	.3458	.7795	.2131	.6468	.0804	.5141	.9477	.3814	.8150	.6823
649	.0450	.4787	.9123	.3460	.7796	.2133	.6469	.0806	.5142	.9479	.3815	.8152	.6825
652	.0451	.4788	.9124	.3461	.7797	.2134	.6470	.0807	.5143	.9480	.3816	.8153	.6826
433655	16.0452	16.4789	16.9125	17.3462	17.7799	18.2135	18.6472	19.0808	19.5145	19.9481	20.3818	20.8154	21.6828
658	.0453	.4790	.9127	.3463	.7800	.2136	.6473	.0810	.5146	.9483	.3819	.8156	.6829
661	.0455	.4791	.9128	.3464	.7801	.2138	.6474	.0811	.5147	.9484	.3821	.8157	.6831
664	.0456	.4792	.9129	.3466	.7802	.2139	.6476	.0812	.5149	.9485	.3822	.8159	.6832
667	.0457	.4793	.9130	.3467	.7803	.2140	.6477	.0813	.5150	.9487	.3823	.8160	.6834
433670	16.0458	16.4795	16.9131	17.3468	17.7805	18.2141	18.6478	19.0815	19.5152	19.9488	20.3825	20.8162	21.6835
673	.0459	.4796	.9132	.3469	.7806	.2143	.6479	.0816	.5153	.9490	.3826	.8163	.6837
676	.0460	.4797	.9134	.3470	.7807	.2144	.6481	.0817	.5154	.9491	.3828	.8164	.6838
679	.0461	.4798	.9135	.3472	.7808	.2145	.6482	.0819	.5156	.9492	.3829	.8166	.6840
682	.0462	.4799	.9136	.3473	.7810	.2146	.6483	.0820	.5157	.9494	.3831	.8167	.6841
433685	16.0463	16.4800	16.9137	17.3474	17.7811	18.2148	18.6485	19.0821	19.5158	19.9495	20.3832	20.8169	21.6843
688	.0465	.4801	.9138	.3475	.7812	.2149	.6486	.0823	.5160	.9496	.3833	.8170	.6844
691	.0466	.4803	.9139	.3476	.7813	.2150	.6487	.0824	.5161	.9498	.3835	.8172	.6846
694	.0467	.4804	.9141	.3478	.7815	.2151	.6488	.0825	.5162	.9499	.3836	.8173	.6847
697	.0468	.4805	.9142	.3479	.7816	.2153	.6490	.0827	.5164	.9501	.3838	.8175	.6849
433700	16.0469	16.4806	16.9143	17.3480	17.7817	18.2154	18.6491	19.0828	19.5165	19.9502	20.3839	20.8176	21.6850

HARMONICS

BASIC FREQ.	24	25	26	27	28	29	30	31	32	33	34	35	36
433700	10.4088	10.8425	11.2762	11.7099	12.1436	12.5773	13.0110	13.4447	13.8784	14.3121	14.7458	15.1795	15.6132
703	.4089	.8426	.2763	.7100	.1437	.5774	.0111	.4448	.8785	.3122	.7459	.1796	.6133
706	.4089	.8427	.2764	.7101	.1438	.5775	.0112	.4449	.8786	.3123	.7460	.1797	.6134
709	.4090	.8427	.2764	.7101	.1439	.5776	.0113	.4450	.8787	.3124	.7461	.1798	.6135
712	.4091	.8428	.2765	.7102	.1439	.5776	.0114	.4451	.8788	.3125	.7462	.1799	.6136
433715	10.4092	10.8429	11.2766	11.7103	12.1440	12.5777	13.0115	13.4452	13.8789	14.3126	14.7463	15.1800	15.6137
718	.4092	.8430	.2767	.7104	.1441	.5778	.0115	.4453	.8790	.3127	.7464	.1801	.6138
721	.4093	.8430	.2767	.7105	.1442	.5779	.0116	.4454	.8791	.3128	.7465	.1802	.6140
724	.4094	.8431	.2768	.7105	.1443	.5780	.0117	.4454	.8792	.3129	.7466	.1803	.6141
727	.4094	.8432	.2769	.7106	.1444	.5781	.0118	.4455	.8793	.3130	.7467	.1804	.6142
433730	10.4095	10.8433	11.1770	11.7107	12.1444	12.5782	13.0119	13.4456	13.8794	14.3131	14.7468	15.1806	15.6143
733	.4096	.8433	.2771	.7108	.1445	.5783	.0120	.4457	.8795	.3132	.7469	.1807	.6144
736	.4097	.8434	.2771	.7109	.1446	.5783	.0121	.4458	.8796	.3133	.7470	.1808	.6145
739	.4097	.8435	.2772	.7110	.1447	.5784	.0122	.4459	.8796	.3134	.7471	.1809	.6146
742	.4098	.8436	.2773	.7110	.1448	.5785	.0123	.4460	.8797	.3135	.7472	.1810	.6147
433745	10.4099	10.8436	11.2774	11.7111	12.1449	12.5786	13.0124	13.4461	13.8798	14.3136	14.7473	15.1811	15.6148
748	.4100	.8437	.2774	.7112	.1449	.5787	.0124	.4462	.8799	.3137	.7474	.1812	.6149
751	.4100	.8438	.2775	.7113	.1450	.5788	.0125	.4463	.8800	.3138	.7475	.1813	.6150
754	.4101	.8439	.2776	.7114	.1451	.5789	.0126	.4464	.8801	.3139	.7476	.1814	.6151
757	.4102	.8439	.2777	.7114	.1452	.5790	.0127	.4465	.8802	.3140	.7477	.1815	.6153
433760	10.4102	10.8440	11.2778	11.7115	12.1453	12.5790	13.0128	13.4466	13.8803	14.3141	14.7478	15.1816	15.6154
763	.4103	.8441	.2778	.7116	.1454	.5791	.0129	.4467	.8804	.3142	.7479	.1817	.6155
766	.4104	.8442	.2779	.7117	.1454	.5792	.0130	.4467	.8805	.3143	.7480	.1818	.6156
769	.4105	.8442	.2780	.7118	.1455	.5793	.0131	.4468	.8806	.3144	.7481	.1819	.6157
772	.4105	.8443	.2781	.7118	.1456	.5794	.0132	.4469	.8807	.3145	.7482	.1820	.6158
433775	10.4106	10.8444	11.2782	11.7119	12.1457	12.5795	13.0133	13.4470	13.8808	14.3146	14.7484	15.1821	15.6159
778	.4107	.8445	.2782	.7120	.1458	.5796	.0133	.4471	.8809	.3147	.7485	.1822	.6160
781	.4107	.8445	.2783	.7121	.1459	.5796	.0134	.4472	.8810	.3148	.7486	.1823	.6161
784	.4108	.8446	.2784	.7122	.1460	.5797	.0135	.4473	.8811	.3149	.7487	.1824	.6162
787	.4109	.8447	.2785	.7122	.1460	.5798	.0136	.4474	.8812	.3150	.7488	.1825	.6163
433790	10.4110	10.8448	11.2785	11.7123	12.1461	12.5799	13.0137	13.4475	13.8813	14.3151	14.7489	15.1827	15.6164
793	.4110	.8448	.2786	.7124	.1462	.5800	.0138	.4476	.8814	.3152	.7490	.1828	.6165
796	.4111	.8449	.2787	.7125	.1463	.5801	.0139	.4477	.8815	.3153	.7491	.1829	.6167
799	.4112	.8450	.2788	.7126	.1464	.5802	.0140	.4478	.8816	.3154	.7492	.1830	.6168
802	.4112	.8451	.2789	.7127	.1465	.5803	.0141	.4479	.8817	.3155	.7493	.1831	.6169
433805	10.4113	10.8451	11.2789	11.7127	12.1465	12.5803	13.0142	13.4480	13.8818	14.3156	14.7494	15.1832	15.6170
808	.4114	.8452	.2790	.7128	.1466	.5804	.0142	.4480	.8819	.3157	.7495	.1833	.6171
811	.4115	.8453	.2791	.7129	.1467	.5805	.0143	.4481	.8820	.3158	.7496	.1834	.6172
814	.4115	.8454	.2792	.7130	.1468	.5806	.0144	.4482	.8820	.3159	.7497	.1835	.6173
817	.4116	.8454	.2792	.7131	.1469	.5807	.0145	.4483	.8821	.3160	.7498	.1836	.6174
433820	10.4117	10.8455	11.2793	11.7131	12.1470	12.5808	13.0146	13.4484	13.8822	14.3161	14.7499	15.1837	15.6175
823	.4118	.8456	.2794	.7132	.1470	.5809	.0147	.4485	.8823	.3162	.7500	.1838	.6176
826	.4118	.8457	.2795	.7133	.1471	.5810	.0148	.4486	.8824	.3163	.7501	.1839	.6177
829	.4119	.8457	.2796	.7134	.1472	.5810	.0149	.4487	.8825	.3164	.7502	.1840	.6178
832	.4120	.8458	.2796	.7135	.1473	.5811	.0150	.4488	.8826	.3165	.7503	.1841	.6180
433835	10.4120	10.8459	11.2797	11.7135	12.1474	12.5812	13.0151	13.4489	13.8827	14.3166	14.7504	15.1842	15.6181
838	.4121	.8460	.2798	.7136	.1475	.5813	.0151	.4490	.8828	.3167	.7505	.1843	.6182
841	.4122	.8460	.2799	.7137	.1475	.5814	.0152	.4491	.8829	.3168	.7506	.1844	.6183
844	.4123	.8461	.2799	.7138	.1476	.5815	.0153	.4492	.8830	.3169	.7507	.1845	.6184
847	.4123	.8462	.2800	.7139	.1477	.5816	.0154	.4493	.8831	.3170	.7508	.1846	.6185
433850	10.4124	10.8463	11.2801	11.7140	12.1478	12.5817	13.0155	13.4494	13.8832	14.3171	14.7509	15.1848	15.6186
853	.4125	.8463	.2802	.7140	.1479	.5817	.0156	.4494	.8833	.3171	.7510	.1849	.6187
856	.4125	.8464	.2803	.7141	.1480	.5818	.0157	.4495	.8834	.3172	.7511	.1850	.6188
859	.4126	.8465	.2803	.7142	.1481	.5819	.0158	.4496	.8835	.3173	.7512	.1851	.6189
862	.4127	.8466	.2804	.7143	.1481	.5820	.0159	.4497	.8836	.3174	.7513	.1852	.6190
433865	10.4128	10.8466	11.2805	11.7144	12.1482	12.5821	13.0160	13.4498	13.8837	14.3175	14.7514	15.1853	15.6191
868	.4128	.8467	.2806	.7144	.1483	.5822	.0160	.4499	.8838	.3176	.7515	.1854	.6192
871	.4129	.8468	.2806	.7145	.1484	.5823	.0161	.4500	.8839	.3177	.7516	.1855	.6194
874	.4130	.8469	.2807	.7146	.1485	.5823	.0162	.4501	.8840	.3178	.7517	.1856	.6195
877	.4130	.8469	.2808	.7147	.1486	.5824	.0163	.4502	.8841	.3179	.7518	.1857	.6196
433880	10.4131	10.8470	11.2809	11.7148	12.1486	12.5825	13.0164	13.4503	13.8842	14.3180	14.7519	15.1858	15.6197
883	.4132	.8471	.2810	.7148	.1487	.5826	.0165	.4504	.8843	.3181	.7520	.1859	.6198
886	.4133	.8472	.2810	.7149	.1488	.5827	.0166	.4505	.8844	.3182	.7521	.1860	.6199
889	.4133	.8472	.2811	.7150	.1489	.5828	.0167	.4506	.8844	.3183	.7522	.1861	.6200
892	.4134	.8473	.2812	.7151	.1490	.5829	.0168	.4507	.8845	.3184	.7523	.1862	.6201
433895	10.4135	10.8474	11.2813	11.7152	12.1491	12.5830	13.0169	13.4507	13.8846	14.3185	14.7524	15.1863	15.6202
898	.4136	.8475	.2813	.7152	.1491	.5830	.0169	.4508	.8847	.3186	.7525	.1864	.6203
901	.4136	.8475	.2814	.7153	.1492	.5831	.0170	.4509	.8848	.3187	.7526	.1865	.6204
904	.4137	.8476	.2815	.7154	.1493	.5832	.0171	.4510	.8849	.3188	.7527	.1866	.6205
907	.4138	.8477	.2816	.7155	.1494	.5833	.0172	.4511	.8850	.3189	.7528	.1867	.6207
433910	10.4138	10.8478	11.2817	11.7156	12.1495	12.5834	13.0173	13.4512	13.8851	14.3190	14.7529	15.1869	15.6208
913	.4139	.8478	.2817	.7157	.1496	.5835	.0174	.4513	.8852	.3191	.7530	.1870	.6209
916	.4140	.8479	.2818	.7157	.1496	.5836	.0175	.4514	.8853	.3192	.7531	.1871	.6210
919	.4141	.8480	.2819	.7158	.1497	.5837	.0176	.4515	.8854	.3193	.7532	.1872	.6211
922	.4141	.8481	.2820	.7159	.1498	.5837	.0177	.4516	.8855	.3194	.7533	.1873	.6212
433925	10.4142	10.8481	11.2821	11.7160	12.1499	12.5838	13.0178	13.4517	13.8856	14.3195	14.7535	15.1874	15.6213
928	.4143	.8482	.2821	.7161	.1500	.5839	.0178	.4518	.8857	.3196	.7536	.1875	.6214
931	.4143	.8483	.2822	.7161	.1501	.5840	.0179	.4519	.8858	.3197	.7537	.1876	.6215
934	.4144	.8484	.2823	.7162	.1502	.5841	.0180	.4520	.8859	.3198	.7538	.1877	.6216
937	.4145	.8484	.2824	.7163	.1502	.5842	.0181	.4520	.8860	.3199	.7539	.1878	.6217
433940	10.4146	10.8485	11.2824	11.7164	12.1503	12.5843	13.0182	13.4521	13.8861	14.3200	14.7540	15.1879	15.6218
943	.4146	.8486	.2825	.7165	.1504	.5843	.0183	.4522	.8862	.3201	.7541	.1880	.6219
946	.4147	.8487	.2826	.7165	.1505	.5844	.0184	.4523	.8863	.3202	.7542	.1881	.6221
949	.4148	.8487	.2827	.7166	.1506	.5845	.0185	.4524	.8864	.3203	.7543	.1882	.6222
952	.4148	.8488	.2828	.7167	.1507	.5846	.0186	.4525	.8865	.3204	.7544	.1883	.6223
433955	10.4149	10.8489	11.2828	11.7168	12.1507	12.5847	13.0187	13.4526	13.8866	14.3205	14.7545	15.1884	15.6224
958	.4150	.8490	.2829	.7169	.1508	.5848	.0187	.4527	.8867	.3206	.7546	.1885	.6225
961	.4151	.8490	.2830	.7169	.1509	.5849	.0188	.4528	.8868	.3207	.7547	.1886	.6226
964	.4151	.8491	.2831	.7170	.1510	.5850	.0189	.4529	.8868	.3208	.7548	.1887	.6227
967	.4152	.8492	.2831	.7171	.1511	.5850	.0190	.4530	.8869	.3209	.7549	.1888	.6228
433970	10.4153	10.8493	11.2832	11.7172	12.1512	12.5851	13.0191	13.4531	13.8870	14.3210	14.7550	15.1890	15.6229
973	.4154	.8493	.2833	.7173	.1512	.5852	.0192	.4532	.8871	.3211	.7551	.1891	.6230
976	.4154	.8494	.2834	.7174	.1513	.5853	.0193	.4533	.8872	.3212	.7552	.1892	.6231
979	.4155	.8495	.2835	.7174	.1514	.5854	.0194	.4533	.8873	.3213	.7553	.1893	.6232
982	.4156	.8496	.2835	.7175	.1515	.5855	.0195	.4534	.8874	.3214	.7554	.1894	.6234
433985	10.4156	10.8496	11.2836	11.7176	12.1516	12.5856	13.0196	13.4535	13.8875	14.3215	14.7555	15.1895	15.6235
988	.4157	.8497	.2837	.7177	.1517	.5857	.0196	.4536	.8876	.3216	.7556	.1896	.6236
991	.4158	.8498	.2838	.7178	.1517	.5857	.0197	.4537	.8877	.3217	.7557	.1897	.6237
994	.4159	.8499	.2838	.7178	.1518	.5858	.0198	.4538	.8878	.3218	.7558	.1898	.6238
997	.4159	.8499	.2839	.7179	.1519	.5859	.0199	.4539	.8879	.3219	.7559	.1899	.6239
434000	10.4160	10.8500	11.2840	11.7180	12.1520	12.5860	13.0200	13.4540	13.8880	14.3220	14.7560	15.1900	15.6240

MEGACYCLES PER SECOND

BASIC FREQ.	HARMONICS 37	38	39	40	41	42	43	44	45	46	47	48	50
433700	16.0469	16.4806	16.9143	17.3480	17.7817	18.2154	18.6491	19.0828	19.5165	19.9502	20.3839	20.8176	21.6850
703	.0470	.4807	.9144	.3481	.7818	.2155	.6492	.0829	.5166	.9503	.3840	.8177	.6852
706	.0471	.4808	.9145	.3482	.7819	.2157	.6494	.0831	.5168	.9505	.3842	.8179	.6853
709	.0472	.4809	.9147	.3464	.7821	.2158	.6495	.0832	.5169	.9506	.3843	.8180	.6855
712	.0473	.4811	.9148	.3485	.7822	.2159	.6496	.0833	.5170	.9508	.3845	.8182	.6856
433715	16.0475	16.4812	16.9149	17.3486	17.7823	18.2160	18.6497	19.0835	19.5172	19.9509	20.3846	20.8183	21.6858
718	.0476	.4813	.9150	.3487	.7824	.2162	.6499	.0836	.5173	.9510	.3847	.8185	.6859
721	.0477	.4814	.9151	.3488	.7826	.2163	.6500	.0837	.5174	.9512	.3849	.8186	.6861
724	.0478	.4815	.9152	.3490	.7827	.2164	.6501	.0839	.5176	.9513	.3850	.8188	.6862
727	.0479	.4816	.9154	.3491	.7828	.2165	.6503	.0840	.5177	.9514	.3852	.8189	.6864
433730	16.0480	16.4817	16.9155	17.3492	17.7829	18.2167	18.6504	19.0841	19.5179	19.9516	20.3853	20.8190	21.6865
733	.0481	.4819	.9156	.3493	.7831	.2168	.6505	.0843	.5180	.9517	.3855	.8192	.6867
736	.0482	.4820	.9157	.3494	.7832	.2169	.6506	.0844	.5181	.9519	.3856	.8193	.6868
739	.0483	.4821	.9158	.3496	.7833	.2170	.6508	.0845	.5183	.9520	.3857	.8195	.6870
742	.0485	.4822	.9159	.3497	.7834	.2172	.6509	.0846	.5184	.9521	.3859	.8196	.6871
433745	16.0486	16.4823	16.9161	17.3498	17.7835	18.2173	18.6510	19.0848	19.5185	19.9523	20.3860	20.8198	21.6873
748	.0487	.4824	.9162	.3499	.7837	.2174	.6512	.0849	.5187	.9524	.3862	.8199	.6874
751	.0488	.4825	.9163	.3500	.7838	.2175	.6513	.0850	.5188	.9525	.3863	.8200	.6876
754	.0489	.4827	.9164	.3502	.7839	.2177	.6514	.0852	.5189	.9527	.3864	.8202	.6877
757	.0490	.4828	.9165	.3503	.7840	.2178	.6516	.0853	.5191	.9528	.3866	.8203	.6879
433760	16.0491	16.4829	16.9166	17.3504	17.7842	18.2179	18.6517	19.0854	19.5192	19.9530	20.3867	20.8205	21.6880
763	.0492	.4830	.9168	.3505	.7843	.2180	.6518	.0856	.5193	.9531	.3869	.8206	.6882
766	.0493	.4831	.9169	.3506	.7844	.2182	.6519	.0857	.5195	.9532	.3870	.8208	.6883
769	.0495	.4832	.9170	.3508	.7845	.2183	.6521	.0858	.5196	.9534	.3871	.8209	.6885
772	.0496	.4833	.9171	.3509	.7847	.2184	.6522	.0860	.5197	.9535	.3873	.8211	.6886
433775	16.0497	16.4835	16.9172	17.3510	17.7848	18.2186	18.6523	19.0861	19.5199	19.9537	20.3874	20.8212	21.6888
778	.0498	.4836	.9173	.3511	.7849	.2187	.6525	.0862	.5200	.9538	.3876	.8213	.6889
781	.0499	.4837	.9175	.3512	.7850	.2188	.6526	.0864	.5201	.9539	.3877	.8215	.6891
784	.0500	.4838	.9176	.3514	.7851	.2189	.6527	.0865	.5203	.9541	.3878	.8216	.6892
787	.0501	.4839	.9177	.3515	.7853	.2191	.6528	.0866	.5204	.9542	.3880	.8218	.6894
433790	16.0502	16.4840	16.9178	17.3516	17.7854	18.2192	18.6530	19.0868	19.5206	19.9543	20.3881	20.8219	21.6895
793	.0503	.4841	.9179	.3517	.7855	.2193	.6531	.0869	.5207	.9545	.3883	.8221	.6897
796	.0505	.4842	.9180	.3518	.7856	.2194	.6532	.0870	.5208	.9546	.3884	.8222	.6898
799	.0506	.4844	.9182	.3520	.7858	.2196	.6534	.0872	.5210	.9548	.3886	.8224	.6900
802	.0507	.4845	.9183	.3521	.7859	.2197	.6535	.0873	.5211	.9549	.3887	.8225	.6901
433805	16.0508	16.4846	16.9184	17.3522	17.7860	18.2198	18.6536	19.0874	19.5212	19.9550	20.3888	20.8226	21.6903
808	.0509	.4847	.9185	.3523	.7861	.2199	.6537	.0876	.5214	.9552	.3890	.8228	.6904
811	.0510	.4848	.9186	.3524	.7863	.2201	.6539	.0877	.5215	.9553	.3891	.8229	.6906
814	.0511	.4849	.9187	.3526	.7864	.2202	.6540	.0878	.5216	.9554	.3893	.8231	.6907
817	.0512	.4850	.9189	.3527	.7865	.2203	.6541	.0879	.5218	.9556	.3894	.8232	.6909
433820	16.0513	16.4852	16.9190	17.3528	17.7866	18.2204	18.6543	19.0881	19.5219	19.9557	20.3895	20.8234	21.6910
823	.0515	.4853	.9191	.3529	.7867	.2206	.6544	.0882	.5220	.9559	.3897	.8235	.6912
826	.0516	.4854	.9192	.3530	.7869	.2207	.6545	.0883	.5222	.9560	.3898	.8236	.6913
829	.0517	.4855	.9193	.3532	.7870	.2208	.6546	.0885	.5223	.9561	.3900	.8238	.6915
832	.0518	.4856	.9194	.3533	.7871	.2209	.6548	.0886	.5224	.9563	.3901	.8239	.6916
433835	16.0519	16.4857	16.9196	17.3534	17.7872	18.2211	18.6549	19.0887	19.5226	19.9564	20.3902	20.8241	21.6918
838	.0520	.4858	.9197	.3535	.7874	.2212	.6550	.0889	.5227	.9565	.3904	.8242	.6919
841	.0521	.4860	.9198	.3536	.7875	.2213	.6552	.0890	.5228	.9567	.3905	.8244	.6921
844	.0522	.4861	.9199	.3538	.7876	.2214	.6553	.0891	.5230	.9568	.3907	.8245	.6922
847	.0523	.4862	.9200	.3539	.7877	.2216	.6554	.0893	.5231	.9570	.3908	.8247	.6924
433850	16.0525	16.4863	16.9202	17.3540	17.7879	18.2217	18.6556	19.0894	19.5233	19.9571	20.3910	20.8248	21.6925
853	.0526	.4864	.9203	.3541	.7880	.2218	.6557	.0895	.5234	.9572	.3911	.8249	.6927
856	.0527	.4865	.9204	.3542	.7881	.2220	.6558	.0897	.5235	.9574	.3912	.8251	.6928
859	.0528	.4866	.9205	.3544	.7882	.2221	.6559	.0898	.5237	.9575	.3914	.8252	.6930
862	.0529	.4868	.9206	.3545	.7883	.2222	.6561	.0899	.5238	.9577	.3915	.8254	.6931
433865	16.0530	16.4869	16.9207	17.3546	17.7885	18.2223	18.6562	19.0901	19.5239	19.9578	20.3917	20.8255	21.6933
868	.0531	.4870	.9209	.3547	.7886	.2225	.6563	.0902	.5241	.9579	.3918	.8257	.6934
871	.0532	.4871	.9210	.3548	.7887	.2226	.6565	.0903	.5242	.9581	.3919	.8258	.6936
874	.0533	.4872	.9211	.3550	.7888	.2227	.6566	.0905	.5243	.9582	.3921	.8260	.6937
877	.0534	.4873	9212	.3551	.7890	.2228	.6567	.0906	.5245	.9583	.3922	.8261	.6939
433880	16.0536	16.4874	16.9213	17.3552	17.7891	18.2230	18.6568	19.0907	19.5246	19.9585	20.3924	20.8262	21.6940
883	.0537	.4876	.9214	.3553	.7892	.2231	.6570	.0909	.5247	.9586	.3925	.8264	.6942
886	.0538	.4877	.9216	.3554	.7893	.2232	.6571	.0910	.5249	.9588	.3926	.8265	.6943
889	.0539	.4878	.9217	.3556	.7894	.2233	.6572	.0911	.5250	.9589	.3928	.8267	.6945
892	.0540	.4879	.9218	.3557	.7896	.2235	.6574	.0912	.5251	.9590	.3929	.8268	.6946
433895	16.0541	16.4880	16.9219	17.3558	17.7897	18.2236	18.6575	19.0914	19.5253	19.9592	20.3931	20.8270	21.6948
898	.0542	.4881	.9220	.3559	.7898	.2237	.6576	.0915	.5254	.9593	.3932	.8271	.6949
901	.0543	.4882	.9221	.3560	.7899	.2238	.6577	.0916	.5255	.9594	.3933	.8272	.6951
904	.0544	.4884	.9223	.3562	.7901	.2240	.6579	.0918	.5257	.9596	.3935	.8274	.6952
907	.0546	.4885	.9224	.3563	.7902	.2241	.6580	.0919	.5258	.9597	.3936	.8275	.6954
433910	16.0547	16.4886	16.9225	17.3564	17.7903	18.2242	18.6581	19.0920	19.5260	19.9599	20.3938	20.8277	21.6955
913	.0548	.4887	.9226	.3565	.7904	.2243	.6583	.0922	.5261	.9600	.3939	.8278	.6957
916	.0549	.4888	.9227	.3566	.7906	.2245	.6584	.0923	.5262	.9601	.3941	.8280	.6958
919	.0550	.4889	.9228	.3568	.7907	.2246	.6585	.0924	.5264	.9603	.3942	.8281	.6960
922	.0551	.4890	.9230	.3569	.7908	.2247	.6586	.0926	.5265	.9604	.3943	.8283	.6961
433925	16.0552	16.4892	16.9231	17.3570	17.7909	18.2249	18.6588	19.0927	19.5266	19.9606	20.3945	20.8284	21.6963
928	.0553	.4893	.9232	.3571	.7910	.2250	.6589	.0928	.5268	.9607	.3946	.8285	.6964
931	.0554	.4894	.9233	.3572	.7912	.2251	.6590	.0930	.5269	.9608	.3948	.8287	.6966
934	.0556	.4895	.9234	.3574	.7913	.2252	.6592	.0931	.5270	.9610	.3949	.8288	.6967
937	.0557	.4896	.9235	.3575	.7914	.2254	.6593	.0932	.5272	.9611	.3950	.8290	.6969
433940	16.0558	16.4897	16.9237	17.3576	17.7915	18.2255	18.6594	19.0934	19.5273	19.9612	20.3952	20.8291	21.6970
943	.0559	.4898	.9238	.3577	.7917	.2256	.6595	.0935	.5274	.9614	.3953	.8293	.6972
946	.0560	.4899	.9239	.3578	.7918	.2257	.6597	.0936	.5276	.9615	.3955	.8294	.6973
949	.0561	.4901	.9240	.3580	.7919	.2259	.6598	.0938	.5277	.9617	.3956	.8296	.6975
952	.0562	.4902	.9241	.3581	.7920	.2260	.6599	.0939	.5278	.9618	.3957	.8297	.6976
433955	16.0563	16.4903	16.9242	17.3582	17.7922	18.2261	18.6601	19.0940	19.5280	19.9619	20.3959	20.8298	21.6978
958	.0564	.4904	.9244	.3583	.7923	.2262	.6602	.0942	.5281	.9621	.3960	.8300	.6979
961	.0566	.4905	.9245	.3584	.7924	.2264	.6603	.0943	.5282	.9622	.3962	.8301	.6981
964	.0567	.4906	.9246	.3586	.7925	.2265	.6605	.0944	.5284	.9623	.3963	.8303	.6982
967	.0568	.4907	.9247	.3587	.7926	.2266	.6606	.0945	.5285	.9625	.3964	.8304	.6984
433970	16.0569	16.4909	16.9248	17.3588	17.7928	18.2267	18.6607	19.0947	19.5287	19.9626	20.3966	20.8306	21.6985
973	.0570	.4910	.9249	.3589	.7929	.2269	.6608	.0948	.5288	.9628	.3967	.8307	.6987
976	.0571	.4911	.9251	.3590	.7930	.2270	.6610	.0949	.5289	.9629	.3969	.8308	.6988
979	.0572	.4912	.9252	.3592	.7931	.2271	.6611	.0951	.5291	.9630	.3970	.8310	.6990
982	.0573	.4913	.9253	.3593	.7933	.2272	.6612	.0952	.5292	.9632	.3972	.8311	.6991
433985	16.0574	16.4914	16.9254	17.3594	17.7934	18.2274	18.6614	19.0953	19.5293	19.9633	20.3973	20.8313	21.6993
988	.0576	.4915	.9255	.3595	.7935	.2275	.6615	.0955	.5295	.9634	.3974	.8314	.6994
991	.0577	.4917	.9256	.3596	.7936	.2276	.6616	.0956	.5296	.9636	.3976	.8316	.6996
994	.0578	.4918	.9258	.3598	.7938	.2277	.6617	.0957	.5297	.9637	.3977	.8317	.6997
997	.0579	.4919	.9259	.3599	.7939	.2279	.6619	.0959	.5299	.9639	.3979	.8319	.6999
434000	16.0580	16.4920	16.9260	17.3600	17.7940	18.2280	18.6620	19.0960	19.5300	19.9640	20.3980	20.8320	21.7000

MEGACYCLES PER SECOND

H A R M O N I C S

BASIC FREQ.	52	54	56	58	60	62	64	66	68	70	72	74	76
416600	21.6632	22.4964	23.3296	24.1628	24.9960	25.8292	26.6624	27.4956	28.3288	29.1620	29.9952	30.8284	31.6616
603	.6634	.4966	.3298	.1630	.9962	.8294	.6626	.4958	.3290	.1622	.9954	.8286	.6618
606	.6635	.4967	.3299	.1631	.9964	.8296	.6628	.4960	.3292	.1624	.9956	.8288	.6621
609	.6637	.4969	.3301	.1633	.9965	.8298	.6630	.4962	.3294	.1626	.9958	.8291	.6623
612	.6638	.4970	.3303	.1635	.9967	.8299	.6632	.4964	.3296	.1628	.9961	.8293	.6625
416615	21.6640	22.4972	23.3304	24.1637	24.9969	25.8301	26.6634	27.4966	28.3298	29.1631	29.9963	30.8295	31.6627
618	.6641	.4974	.3306	.1638	.9971	.8303	.6636	.4968	.3300	.1633	.9965	.8297	.6630
621	.6643	.4975	.3308	.1640	.9973	.8305	.6637	.4970	.3302	.1635	.9967	.8300	.6632
624	.6644	.4977	.3309	.1642	.9974	.8307	.6639	.4972	.3304	.1637	.9969	.8302	.6634
627	.6646	.4979	.3311	.1644	.9976	.8309	.6641	.4974	.3306	.1639	.9971	.8304	.6637
416630	21.6648	22.4980	23.3313	24.1645	24.9978	25.8311	26.6643	27.4976	28.3308	29.1641	29.9974	30.8306	31.6639
633	.6649	.4982	.3314	.1647	.9980	.8312	.6645	.4978	.3310	.1643	.9976	.8308	.6641
636	.6651	.4983	.3316	.1649	.9982	.8314	.6647	.4980	.3312	.1645	.9978	.8311	.6643
639	.6652	.4985	.3318	.1651	.9983	.8316	.6649	.4982	.3315	.1647	.9980	.8313	.6646
642	.6654	.4987	.3320	.1652	.9985	.8318	.6651	.4984	.3317	.1649	.9982	.8315	.6648
416645	21.6655	22.4988	23.3321	24.1654	24.9987	25.8320	26.6653	27.4986	28.3319	29.1652	29.9984	30.8317	31.6650
648	.6657	.4990	.3323	.1656	.9989	.8322	.6655	.4988	.3321	.1654	.9987	.8320	.6652
651	.6659	.4992	.3325	.1658	.9991	.8324	.6657	.4990	.3323	.1656	.9989	.8322	.6655
654	.6660	.4993	.3326	.1659	.9992	.8325	.6659	.4992	.3325	.1658	.9991	.8324	.6657
657	.6662	.4995	.3328	.1661	.9994	.8327	.6660	.4994	.3327	.1660	.9993	.8326	.6659
416660	21.6663	22.4996	23.3330	24.1663	24.9996	25.8329	26.6662	27.4996	28.3329	29.1662	29.9995	30.8328	31.6662
663	.6665	.4998	.3331	.1665	.9998	.8331	.6664	.4998	.3331	.1664	.9997	.8331	.6664
666	.6666	.5000	.3333	.1666	25.0000	.8333	.6666	.5000	.3333	.1666	30.0000	.8333	.6666
669	.6668	.5001	.3335	.1668	.0001	.8335	.6668	.5002	.3335	.1668	.0002	.8335	.6668
672	.6669	.5003	.3336	.1670	.0003	.8337	.6670	.5004	.3337	.1670	.0004	.8337	.6671
416675	21.6671	22.5005	23.3338	24.1672	25.0005	25.8339	26.6672	27.5006	28.3339	29.1673	30.0006	30.8340	31.6673
678	.6673	.5006	.3340	.1673	.0007	.8340	.6674	.5007	.3341	.1675	.0008	.8342	.6675
681	.6674	.5008	.3341	.1675	.0009	.8342	.6676	.5009	.3343	.1677	.0010	.8344	.6678
684	.6676	.5009	.3343	.1677	.0010	.8344	.6678	.5011	.3345	.1679	.0012	.8346	.6680
687	.6677	.5011	.3345	.1678	0012	.8346	.6680	.5013	.3347	.1681	.0015	.8348	.6682
416690	21.6679	22.5013	23.3346	24.1680	25.0014	25.8348	26.6682	27.5015	28.3349	29.1683	30.0017	30.8351	31.6684
693	.6680	.5014	.3348	.1682	.0016	.8350	.6684	.5017	.3351	.1685	.0019	.8353	.6687
696	.6682	.5016	.3350	.1684	.0018	.8352	.6685	.5019	.3353	.1687	.0021	.8355	.6689
699	.6683	.5017	.3351	.1685	.0019	.8353	.6687	.5021	.3355	.1689	.0023	.8357	.6691
702	.6685	.5019	.3353	.1687	.0021	.8355	.6689	.5023	.3357	.1691	.0025	.8359	.6694
416705	21.6687	22.5021	23.3355	24.1689	25.0023	25.8357	26.6691	27.5025	28.3359	29.1694	30.0028	30.8362	31.6696
708	.6688	.5022	.3356	.1691	.0025	.8359	.6693	.5027	.3361	.1696	.0030	.8364	.6698
711	.6690	.5024	.3358	.1692	.0027	.8361	.6695	.5029	.3363	.1698	.0032	.8366	.6700
714	.6691	.5026	.3360	.1694	.0028	.8363	.6697	.5031	.3366	.1700	.0034	.8368	.6703
717	.6693	.5027	.3362	.1696	.0030	.8365	.6699	.5033	.3368	.1702	.0036	.8371	.6705
416720	21.6694	22.5029	23.3363	24.1698	25.0032	25.8366	26.6701	27.5035	28.3370	29.1704	30.0038	30.8373	31.6707
723	.6696	.5030	.3365	.1699	.0034	.8368	.6703	.5037	.3372	.1706	.0041	.8375	.6709
726	.6698	.5032	.3367	.1701	.0036	.8370	.6705	.5039	.3374	.1708	.0043	.8377	.6712
729	.6699	.5034	.3368	.1703	.0037	.8372	.6707	.5041	.3376	.1710	.0045	.8379	.6714
732	.6701	.5035	.3370	.1705	.0039	.8374	.6708	.5043	.3378	.1712	.0047	.8382	.6716
416735	21.6702	22.5037	23.3372	24.1706	25.0041	25.8376	26.6710	27.5045	28.3380	29.1715	30.0049	30.8384	31.6719
738	.6704	.5039	.3373	.1708	.0043	.8378	.6712	.5047	.3382	.1717	.0051	.8386	.6721
741	.6705	.5040	.3375	.1710	.0045	.8379	.6714	.5049	.3384	.1719	.0054	.8388	.6723
744	.6707	.5042	.3377	.1712	.0046	.8381	.6716	.5051	.3386	.1721	.0056	.8391	.6725
747	.6708	.5043	.3378	.1713	.0048	.8383	.6718	.5053	.3388	.1723	.0058	.8393	.6728
416750	21.6710	22.5045	23.3380	24.1715	25.0050	25.8385	26.6720	27.5055	28.3390	29.1725	30.0060	30.8395	31.6730
753	.6712	.5047	.3382	.1717	.0052	.8387	.6722	.5057	.3392	.1727	.0062	.8397	.6732
756	.6713	.5048	.3383	.1718	.0054	.8389	.6724	.5059	.3394	.1729	.0064	.8399	.6735
759	.6715	.5050	.3385	.1720	.0055	.8391	.6726	.5061	.3396	.1731	.0066	.8402	.6737
762	.6716	.5051	.3387	.1722	.0057	.8392	.6728	.5063	.3398	.1733	.0069	.8404	.6739
416765	21.6718	22.5053	23.3388	24.1724	25.0059	25.8394	26.6730	27.5065	28.3400	29.1736	30.0071	30.8406	31.6741
768	.6719	.5055	.3390	.1725	.0061	.8396	.6732	.5067	.3402	.1738	.0073	.8408	.6744
771	.6721	.5056	.3392	.1727	.0063	.8398	.6733	.5069	.3404	.1740	.0075	.8411	.6746
774	.6722	.5058	.3393	.1729	.0064	.8400	.6735	.5071	.3406	.1742	.0077	.8413	.6748
777	.6724	.5060	.3395	.1731	.0066	.8402	.6737	.5073	.3408	.1744	.0079	.8415	.6751
416780	21.6726	22.5061	23.3397	24.1732	25.0068	25.8404	26.6739	27.5075	28.3410	29.1746	30.0082	30.8417	31.6753
783	.6727	.5063	.3398	.1734	.0070	.8405	.6741	.5077	.3412	.1748	.0084	.8419	.6755
786	.6729	.5064	.3400	.1736	.0072	.8407	.6743	.5079	.3414	.1750	.0086	.8422	.6757
789	.6730	.5066	.3402	.1738	.0073	.8409	.6745	.5081	.3417	.1752	.0088	.8424	.6760
792	.6732	.5068	.3404	.1739	.0075	.8411	.6747	.5083	.3419	.1754	.0090	.8426	.6762
416795	21.6733	22.5069	23.3405	24.1741	25.0077	25.8413	26.6749	27.5085	28.3421	29.1757	30.0092	30.8428	31.6764
798	.6735	.5071	.3407	.1743	.0079	.8415	.6751	.5087	.3423	.1759	.0095	.8431	.6766
801	.6737	.5073	.3409	.1745	.0081	.8417	.6753	.5089	.3425	.1761	.0097	.8433	.6769
804	.6738	.5074	.3410	.1746	.0082	.8418	.6755	.5091	.3427	.1763	.0099	.8435	.6771
807	.6740	.5076	.3412	.1748	.0084	.8420	.6756	.5093	.3429	.1765	.0101	.8437	.6773
416810	21.6741	22.5077	23.3414	24.1750	25.0086	25.8422	26.6758	27.5095	28.3431	29.1767	30.0103	30.8439	31.6776
813	.6743	.5079	.3415	.1752	.0088	.8424	.6760	.5097	.3433	.1769	.0105	.8442	.6778
816	.6744	.5081	.3417	.1753	.0090	.8426	.6762	.5099	.3435	.1771	.0108	.8444	.6780
819	.6746	.5082	.3419	.1755	.0091	.8428	.6764	.5101	.3437	.1773	.0110	.8446	.6782
822	.6747	.5084	.3420	.1757	.0093	.8430	.6766	.5103	.3439	.1775	.0112	.8448	.6785
416825	21.6749	22.5086	23.3422	24.1759	25.0095	25.8432	26.6768	27.5105	28.3441	29.1778	30.0114	30.8451	31.6787
828	.6751	.5087	.3424	.1760	.0097	.8433	.6770	.5106	.3443	.1780	.0116	.8453	.6789
831	.6752	.5089	.3425	.1762	.0099	.8435	.6772	.5108	.3445	.1782	.0118	.8455	.6792
834	.6754	.5090	.3427	.1764	.0100	.8437	.6774	.5110	.3447	.1784	.0120	.8457	.6794
837	.6755	.5092	.3429	.1765	.0102	.8439	.6776	.5112	.3449	.1786	.0123	.8459	.6796
416840	21.6757	22.5094	23.3430	24.1767	25.0104	25.8441	26.6778	27.5114	28.3451	29.1788	30.0125	30.8462	31.6798
843	.6758	.5095	.3432	.1769	.0106	.8443	.6780	.5116	.3453	.1790	.0127	.8464	.6801
846	.6760	.5097	.3434	.1771	.0108	.8445	.6781	.5118	.3455	.1792	.0129	.8466	.6803
849	.6761	.5098	.3435	.1772	.0109	.8446	.6783	.5120	.3457	.1794	.0131	.8468	.6805
852	.6763	.5100	.3437	.1774	.0111	.8448	.6785	.5122	.3459	.1796	.0133	.8470	.6808
416855	21.6765	22.5102	23.3439	24.1776	25.0113	25.8450	26.6787	27.5124	28.3461	29.1799	30.0136	30.8473	31.6810
858	.6766	.5103	.3440	.1778	.0115	.8452	.6789	.5126	.3463	.1801	.0138	.8475	.6812
861	.6768	.5105	.3442	.1779	.0117	.8454	.6791	.5128	.3465	.1803	.0140	.8477	.6814
864	.6769	.5107	.3444	.1781	.0118	.8456	.6793	.5130	.3468	.1805	.0142	.8479	.6817
867	.6771	.5108	.3446	.1783	.0120	.8458	.6795	.5132	.3470	.1807	.0144	.8482	.6819
416870	21.6772	22.5110	23.3447	24.1785	25.0122	25.8459	26.6797	27.5134	28.3472	29.1809	30.0146	30.8484	31.6821
873	.6774	.5111	.3449	.1786	.0124	.8461	.6799	.5136	.3474	.1811	.0149	.8486	.6823
876	.6776	.5113	.3451	.1788	.0126	.8463	.6801	.5138	.3476	.1813	.0151	.8488	.6826
879	.6777	.5115	.3452	.1790	.0127	.8465	.6803	.5140	.3478	.1815	.0153	.8490	.6828
882	.6779	.5116	.3454	.1792	.0129	.8467	.6804	.5142	.3480	.1817	.0155	.8493	.6830
416885	21.6780	22.5118	23.3456	24.1793	25.0131	25.8469	26.6806	27.5144	28.3482	29.1820	30.0157	30.8495	31.6833
888	.6782	.5120	.3457	.1795	.0133	.8471	.6808	.5146	.3484	.1822	.0159	.8497	.6835
891	.6783	.5121	.3459	.1797	.0135	.8472	.6810	.5148	.3486	.1824	.0162	.8499	.6837
894	.6785	.5123	.3461	.1799	.0136	.8474	.6812	.5150	.3488	.1826	.0164	.8502	.6839
897	.6786	.5124	.3462	.1800	.0138	.8476	.6814	.5152	.3490	.1828	.0166	.8504	.6842
416900	21.6788	22.5126	23.3464	24.1802	25.0140	25.8478	26.6816	27.5154	28.3492	29.1830	30.0168	30.8506	31.6844

MEGACYCLES PER SECOND

HARMONICS

BASIC FREQ.	78	80	82	84	86	88	90	92	94	96	100	104	108
416600	32.4948	33.3280	34.1612	34.9944	35.8276	36.6608	37.4940	38.3272	39.1604	39.9936	41.6600	43.3264	44.9928
603	.4950	.3282	.1614	.9947	.8279	.6611	.4943	.3275	.1607	.9939	.6603	.3267	.9931
606	.4953	.3285	.1617	.9949	.8281	.6613	.4945	.3278	.1610	.9942	.6606	.3270	.9934
609	.4955	.3287	.1619	.9952	.8284	.6616	.4948	.3280	.1612	.9945	.6609	.3273	.9938
612	.4957	.3290	.1622	.9954	.8286	.6619	.4951	.3283	.1615	.9948	.6612	.3276	.9941
416615	32.4960	33.3292	34.1624	34.9957	35.8289	36.6621	37.4954	38.3286	39.1618	39.9950	41.6615	43.3280	44.9944
618	.4962	.3294	.1627	.9959	.8291	.6624	.4956	.3289	.1621	.9953	.6618	.3283	.9947
621	.4964	.3297	.1629	.9962	.8294	.6626	.4959	.3291	.1624	.9956	.6621	.3286	.9951
624	.4967	.3299	.1632	.9964	.8297	.6629	.4962	.3294	.1627	.9959	.6624	.3289	.9954
627	.4969	.3302	.1634	.9967	.8299	.6632	.4964	.3297	.1629	.9962	.6627	.3292	.9957
416630	32.4971	33.3304	34.1637	34.9969	35.8302	36.6634	37.4967	38.3300	39.1632	39.9965	41.6630	43.3295	44.9960
633	.4974	.3306	.1639	.9972	.8304	.6637	.4970	.3302	.1635	.9968	.6633	.3298	.9964
636	.4976	.3309	.1642	.9974	.8307	.6640	.4972	.3305	.1638	.9971	.6636	.3301	.9967
639	.4978	.3311	.1644	.9977	.8310	.6642	.4975	.3308	.1641	.9973	.6639	.3305	.9970
642	.4981	.3314	.1646	.9979	.8312	.6645	.4978	.3311	.1643	.9976	.6642	.3308	.9973
416645	32.4983	33.3316	34.1649	34.9982	35.8315	36.6648	37.4981	38.3313	39.1646	39.9979	41.6645	43.3311	44.9977
648	.4985	.3318	.1651	.9984	.8317	.6650	.4983	.3316	.1649	.9982	.6648	.3314	.9980
651	.4988	.3321	.1654	.9987	.8320	.6653	.4986	.3319	.1652	.9985	.6651	.3317	.9983
654	.4990	.3323	.1656	.9989	.8322	.6656	.4989	.3322	.1655	.9988	.6654	.3320	.9986
657	.4992	.3326	.1659	.9992	.8325	.6658	.4991	.3324	.1658	.9991	.6657	.3323	.9990
416660	32.4995	33.3328	34.1661	34.9994	35.8328	36.6661	37.4994	38.3327	39.1660	39.9994	41.6660	43.3326	44.9993
663	.4997	.3330	.1664	.9997	.8330	.6663	.4997	.3330	.1663	.9996	.6663	.3330	.9996
666	.4999	.3333	.1666	.9999	.8333	.6666	.4999	.3333	.1666	.9999	.6666	.3333	.9999
669	.5002	.3335	.1669	35.0002	.8335	.6669	.5002	.3335	.1669	40.0002	.6669	.3336	45.0003
672	.5004	.3338	.1671	.0004	.8338	.6671	.5005	.3338	.1672	.0005	.6672	.3339	.0006
416675	32.5007	33.3340	34.1674	35.0007	35.8341	36.6674	37.5008	38.3341	39.1675	40.0008	41.6675	43.3342	45.0009
678	.5009	.3342	.1676	.0010	.8343	.6677	.5010	.3344	.1677	.0011	.6678	.3345	.0012
681	.5011	.3345	.1678	.0012	.8346	.6679	.5013	.3347	.1680	.0014	.6681	.3348	.0015
684	.5014	.3347	.1681	.0015	.8348	.6682	.5016	.3349	.1683	.0017	.6684	.3351	.0019
687	.5016	.3350	.1683	.0017	.8351	.6685	.5018	.3352	.1686	.0020	.6687	.3354	.0022
416690	32.5018	33.3352	34.1686	35.0020	35.8353	36.6687	37.5021	38.3355	39.1689	40.0022	41.6690	43.3358	45.0025
693	.5021	.3354	.1688	.0022	.8356	.6690	.5024	.3358	.1691	.0025	.6693	.3361	.0028
696	.5023	.3357	.1691	.0025	.8359	.6692	.5026	.3360	.1694	.0028	.6696	.3364	.0032
699	.5025	.3359	.1693	.0027	.8361	.6695	.5029	.3363	.1697	.0031	.6699	.3367	.0035
702	.5028	.3362	.1696	.0030	.8364	.6698	.5032	.3366	.1700	.0034	.6702	.3370	.0038
416705	32.5030	33.3364	34.1698	35.0032	35.8366	36.6700	37.5035	38.3369	39.1703	40.0037	41.6705	43.3373	45.0041
708	.5032	.3366	.1701	.0035	.8369	.6703	.5037	.3371	.1706	.0040	.6708	.3376	.0045
711	.5035	.3369	.1703	.0037	.8371	.6706	.5040	.3374	.1708	.0043	.6711	.3379	.0048
714	.5037	.3371	.1705	.0040	.8374	.6708	.5043	.3377	.1711	.0045	.6714	.3383	.0051
717	.5039	.3374	.1708	.0042	.8377	.6711	.5045	.3380	.1714	.0048	.6717	.3386	.0054
416720	32.5042	33.3376	34.1710	35.0045	35.8379	36.6714	37.5048	38.3382	39.1717	40.0051	41.6720	43.3389	45.0058
723	.5044	.3378	.1713	.0047	.8382	.6716	.5051	.3385	.1720	.0054	.6723	.3392	.0061
726	.5046	.3381	.1715	.0050	.8384	.6719	.5053	.3388	.1722	.0057	.6726	.3395	.0064
729	.5049	.3383	.1718	.0052	.8387	.6722	.5056	.3391	.1725	.0060	.6729	.3398	.0067
732	.5051	.3386	.1720	.0055	.8390	.6724	.5059	.3393	.1728	.0063	.6732	.3401	.0071
416735	32.5053	33.3388	34.1723	35.0057	35.8392	36.6727	37.5062	38.3396	39.1731	40.0066	41.6735	43.3404	45.0074
738	.5056	.3390	.1725	.0060	.8395	.6729	.5064	.3399	.1734	.0068	.6738	.3408	.0077
741	.5058	.3393	.1728	.0062	.8397	.6732	.5067	.3402	.1737	.0071	.6741	.3411	.0080
744	.5060	.3395	.1730	.0065	.8400	.6735	.5070	.3404	.1739	.0074	.6744	.3414	.0084
747	.5063	.3398	.1733	.0067	.8402	.6737	.5072	.3407	.1742	.0077	.6747	.3417	.0087
416750	32.5065	33.3400	34.1735	35.0070	35.8405	36.6740	37.5075	38.3410	39.1745	40.0080	41.6750	43.3420	45.0090
753	.5067	.3402	.1737	.0073	.8408	.6743	.5078	.3413	.1748	.0083	.6753	.3423	.0093
756	.5070	.3405	.1740	.0075	.8410	.6745	.5080	.3416	.1751	.0086	.6756	.3426	.0096
759	.5072	.3407	.1742	.0078	.8413	.6748	.5083	.3418	.1753	.0089	.6759	.3429	.0100
762	.5074	.3410	.1745	.0080	.8415	.6751	.5086	.3421	.1756	.0092	.6762	.3432	.0103
416765	32.5077	33.3412	34.1747	35.0083	35.8418	36.6753	37.5089	38.3424	39.1759	40.0094	41.6765	43.3436	45.0106
768	.5079	.3414	.1750	.0085	.8420	.6756	.5091	.3427	.1762	.0097	.6768	.3439	.0109
771	.5081	.3417	.1752	.0088	.8423	.6758	.5094	.3429	.1765	.0100	.6771	.3442	.0113
774	.5084	.3419	.1755	.0090	.8426	.6761	.5097	.3432	.1768	.0103	.6774	.3445	.0116
777	.5086	.3422	.1757	.0093	.8428	.6764	.5099	.3435	.1770	.0106	.6777	.3448	.0119
416780	32.5088	33.3424	34.1760	35.0095	35.8431	36.6766	37.5102	38.3438	39.1773	40.0109	41.6780	43.3451	45.0122
783	.5091	.3426	.1762	.0098	.8433	.6769	.5105	.3440	.1776	.0112	.6783	.3454	.0126
786	.5093	.3429	.1765	.0100	.8436	.6772	.5107	.3443	.1779	.0115	.6786	.3457	.0129
789	.5095	.3431	.1767	.0103	.8439	.6774	.5110	.3446	.1782	.0117	.6789	.3461	.0132
792	.5098	.3434	.1769	.0105	.8441	.6777	.5113	.3449	.1784	.0120	.6792	.3464	.0135
416795	32.5100	33.3436	34.1772	35.0108	35.8444	36.6780	37.5116	38.3451	39.1787	40.0123	41.6795	43.3467	45.0139
798	.5102	.3438	.1774	.0110	.8446	.6782	.5118	.3454	.1790	.0126	.6798	.3470	.0142
801	.5105	.3441	.1777	.0113	.8449	.6785	.5121	.3457	.1793	.0129	.6801	.3473	.0145
804	.5107	.3443	.1779	.0115	.8451	.6788	.5124	.3460	.1796	.0132	.6804	.3476	.0148
807	.5109	.3446	.1782	.0118	.8454	.6790	.5126	.3462	.1799	.0135	.6807	.3479	.0152
416810	32.5112	33.3448	34.1784	35.0120	35.8457	36.6793	37.5129	38.3465	39.1801	40.0138	41.6810	43.3482	45.0155
813	.5114	.3450	.1787	.0123	.8459	.6795	.5132	.3468	.1804	.0140	.6813	.3486	.0158
816	.5116	.3453	.1789	.0125	.8462	.6798	.5134	.3471	.1807	.0143	.6816	.3489	.0161
819	.5119	.3455	.1792	.0128	.8464	.6801	.5137	.3473	.1810	.0146	.6819	.3492	.0165
822	.5121	.3458	.1794	.0130	.8467	.6803	.5140	.3476	.1813	.0149	.6822	.3495	.0168
416825	32.5124	33.3460	34.1797	35.0133	35.8470	36.6806	37.5143	38.3479	39.1816	40.0152	41.6825	43.3498	45.0171
828	.5126	.3462	.1799	.0136	.8472	.6809	.5145	.3482	.1818	.0155	.6828	.3501	.0174
831	.5128	.3465	.1801	.0138	.8475	.6811	.5148	.3485	.1821	.0158	.6831	.3504	.0177
834	.5131	.3467	.1804	.0141	.8477	.6814	.5151	.3487	.1824	.0161	.6834	.3507	.0181
837	.5133	.3470	.1806	.0143	.8480	.6817	.5153	.3490	.1827	.0164	.6837	.3510	.0184
416840	32.5135	33.3472	34.1809	35.0146	35.8482	36.6819	37.5156	38.3493	39.1830	40.0166	41.6840	43.3514	45.0187
843	.5138	.3474	.1811	.0148	.8485	.6822	.5159	.3496	.1832	.0169	.6843	.3517	.0190
846	.5140	.3477	.1814	.0151	.8488	.6824	.5161	.3498	.1835	.0172	.6846	.3520	.0194
849	.5142	.3479	.1816	.0153	.8490	.6827	.5164	.3501	.1838	.0175	.6849	.3523	.0197
852	.5145	.3482	.1819	.0156	.8493	.6830	.5167	.3504	.1841	.0178	.6852	.3526	.0200
416855	32.5147	33.3484	34.1821	35.0158	35.8495	36.6832	37.5170	38.3507	39.1844	40.0181	41.6855	43.3529	45.0203
858	.5149	.3486	.1824	.0161	.8498	.6835	.5172	.3509	.1847	.0184	.6858	.3532	.0207
861	.5152	.3489	.1826	.0163	.8500	.6838	.5175	.3512	.1849	.0187	.6861	.3535	.0210
864	.5154	.3491	.1828	.0166	.8503	.6840	.5178	.3515	.1852	.0189	.6864	.3539	.0213
867	.5156	.3494	.1831	.0168	.8506	.6843	.5180	.3518	.1855	.0192	.6867	.3542	.0216
416870	32.5159	33.3496	34.1833	35.0171	35.8508	36.6846	37.5183	38.3520	39.1858	40.0195	41.6870	43.3545	45.0220
873	.5161	.3498	.1836	.0173	.8511	.6848	.5186	.3523	.1861	.0198	.6873	.3548	.0223
876	.5163	.3501	.1838	.0176	.8513	.6851	.5188	.3526	.1863	.0201	.6876	.3551	.0226
879	.5166	.3503	.1841	.0178	.8516	.6854	.5191	.3529	.1866	.0204	.6879	.3554	.0229
882	.5168	.3506	.1843	.0181	.8519	.6856	.5194	.3531	.1869	.0207	.6882	.3557	.0233
416885	32.5170	33.3508	34.1846	35.0183	35.8521	36.6859	37.5197	38.3534	39.1872	40.0210	41.6885	43.3560	45.0236
888	.5173	.3510	.1848	.0186	.8524	.6861	.5199	.3537	.1875	.0212	.6888	.3564	.0239
891	.5175	.3513	.1851	.0188	.8526	.6864	.5202	.3540	.1878	.0215	.6891	.3567	.0242
894	.5177	.3515	.1853	.0191	.8529	.6867	.5205	.3542	.1880	.0218	.6894	.3570	.0246
897	.5180	.3518	.1856	.0193	.8531	.6869	.5207	.3545	.1883	.0221	.6897	.3573	.0249
416900	32.5182	33.3520	34.1858	35.0196	35.8534	36.6872	37.5210	38.3548	39.1886	40.0224	41.6900	43.3576	45.0252

MEGACYCLES PER SECOND

HARMONICS

BASIC FREQ.	52	54	56	58	60	62	64	66	68	70	72	74	76
416900	21.6788	22.5126	23.3464	24.1802	25.0140	25.8478	26.6816	27.5154	28.3492	29.1830	30.0168	30.8506	31.6844
903	.6790	.5128	.3466	.1804	.0142	.8480	.6818	.5156	.3494	.1832	.0170	.8508	.6846
906	.6791	.5129	.3467	.1805	.0144	.8482	.6820	.5158	.3496	.1834	.0172	.8510	.6849
909	.6793	.5131	.3469	.1807	.0145	.8484	.6822	.5160	.3498	.1836	.0174	.8513	.6851
912	.6794	.5132	.3471	.1809	.0147	.8485	.6824	.5162	.3500	.1838	.0177	.8515	.6853
416915	21.6796	22.5134	23.3472	24.1811	25.0149	25.8487	26.6826	27.5164	28.3502	29.1841	30.0179	30.8517	31.6855
918	.6797	.5136	.3474	.1812	.0151	.8489	.6828	.5166	.3504	.1843	.0181	.8519	.6858
921	.6799	.5137	.3476	.1814	.0153	.8491	.6829	.5168	.3506	.1845	.0183	.8522	.6860
924	.6800	.5139	.3477	.1816	.0154	.8493	.6831	.5170	.3508	.1847	.0185	.8524	.6862
927	.6802	.5141	.3479	.1818	.0156	.8495	.6833	.5172	.3510	.1849	.0187	.8526	.6865
416930	21.6804	22.5142	23.3481	24.1819	25.0158	25.8497	26.6835	27.5174	28.3512	29.1851	30.0190	30.8528	31.6867
933	.6805	.5144	.3482	.1821	.0160	.8498	.6837	.5176	.3514	.1853	.0192	.8530	.6869
936	.6807	.5145	.3484	.1823	.0162	.8500	.6839	.5178	.3516	.1855	.0194	.8533	.6871
939	.6808	.5147	.3486	.1825	.0163	.8502	.6841	.5180	.3519	.1857	.0196	.8535	.6874
942	.6810	.5149	.3488	.1826	.0165	.8504	.6843	.5182	.3521	.1859	.0198	.8537	.6876
416945	21.6811	22.5150	23.3489	24.1828	25.0167	25.8506	26.6845	27.5184	28.3523	29.1862	30.0200	30.8539	31.6878
948	.6813	.5152	.3491	.1830	.0169	.8508	.6847	.5186	.3525	.1864	.0203	.8542	.6880
951	.6815	.5154	.3493	.1832	.0171	.8510	.6849	.5188	.3527	.1866	.0205	.8544	.6883
954	.6816	.5155	.3494	.1833	.0172	.8511	.6851	.5190	.3529	.1868	.0207	.8546	.6885
957	.6818	.5157	.3496	.1835	.0174	.8513	.6852	.5192	.3531	.1870	.0209	.8548	.6887
416960	21.6819	22.5158	23.3498	24.1837	25.0176	25.8515	26.6854	27.5194	28.3533	29.1872	30.0211	30.8550	31.6890
963	.6821	.5160	.3499	.1839	.0178	.8517	.6856	.5196	.3535	.1874	.0213	.8553	.6892
966	.6822	.5162	.3501	.1840	.0180	.8519	.6858	.5198	.3537	.1876	.0216	.8555	.6894
969	.6824	.5163	.3503	.1842	.0181	.8521	.6860	.5200	.3539	.1878	.0218	.8557	.6896
972	.6825	.5165	.3504	.1844	.0183	.8523	.6862	.5202	.3541	.1880	.0220	.8559	.6899
416975	21.6827	22.5167	23.3506	24.1846	25.0185	25.8525	26.6864	27.5204	28.3543	29.1883	30.0222	30.8562	31.6901
978	.6829	.5168	.3508	.1847	.0187	.8526	.6866	.5205	.3545	.1885	.0224	.8564	.6903
981	.6830	.5170	.3509	.1849	.0189	.8528	.6868	.5207	.3547	.1887	.0226	.8566	.6906
984	.6832	.5171	.3511	.1851	.0190	.8530	.6870	.5209	.3549	.1889	.0228	.8568	.6908
987	.6833	.5173	.3513	.1852	.0192	.8532	.6872	.5211	.3551	.1891	.0231	.8570	.6910
416990	21.6835	22.5175	23.3514	24.1854	25.0194	25.8534	26.6874	27.5213	28.3553	29.1893	30.0233	30.8573	31.6912
993	.6836	.5176	.3516	.1856	.0196	.8536	.6876	.5215	.3555	.1895	.0235	.8575	.6915
996	.6838	.5178	.3518	.1858	.0198	.8538	.6877	.5217	.3557	.1897	.0237	.8577	.6917
999	.6839	.5179	.3519	.1859	.0199	.8539	.6879	.5219	.3559	.1899	.0239	.8579	.6919
417002	.6841	.5181	.3521	.1861	.0201	.8541	.6881	.5221	.3561	.1901	.0241	.8581	.6922
417005	21.6843	22.5183	23.3523	24.1863	25.0203	25.8543	26.6883	27.5223	28.3563	29.1904	30.0244	30.8584	31.6924
008	.6844	.5184	.3524	.1865	.0205	.8545	.6885	.5225	.3565	.1906	.0246	.8586	.6926
011	.6846	.5186	.3526	.1866	.0207	.8547	.6887	.5227	.3567	.1908	.0248	.8588	.6928
014	.6847	.5188	.3528	.1868	.0208	.8549	.6889	.5229	.3570	.1910	.0250	.8590	.6931
017	.6849	.5189	.3530	.1870	.0210	.8551	.6891	.5231	.3572	.1912	.0252	.8593	.6933
417020	21.6850	22.5191	23.3531	24.1872	25.0212	25.8552	26.6893	27.5233	28.3574	29.1914	30.0254	30.8595	31.6935
023	.6852	.5192	.3533	.1873	.0214	.8554	.6895	.5235	.3576	.1916	.0257	.8597	.6937
026	.6854	.5194	.3535	.1875	.0216	.8556	.6897	.5237	.3578	.1918	.0259	.8599	.6940
029	.6855	.5196	.3536	.1877	.0217	.8558	.6899	.5239	.3580	.1920	.0261	.8601	.6942
032	.6857	.5197	.3538	.1879	.0219	.8560	.6900	.5241	.3582	.1922	.0263	.8604	.6944
417035	21.6858	22.5199	23.3540	24.1880	25.0221	25.8562	26.6902	27.5243	28.3584	29.1925	30.0265	30.8606	31.6947
038	.6860	.5201	.3541	.1882	.0223	.8564	.6904	.5245	.3586	.1927	.0267	.8608	.6949
041	.6861	.5202	.3543	.1884	.0225	.8565	.6906	.5247	.3588	.1929	.0270	.8610	.6951
044	.6863	.5204	.3545	.1886	.0226	.8567	.6908	.5249	.3590	.1931	.0272	.8613	.6953
047	.6864	.5205	.3546	.1887	.0228	.8569	.6910	.5251	.3592	.1933	.0274	.8615	.6956
417050	21.6866	22.5207	23.3548	24.1889	25.0230	25.8571	26.6912	27.5253	28.3594	29.1935	30.0276	30.8617	31.6958
053	.6868	.5209	.3550	.1891	.0232	.8573	.6914	.5255	.3596	.1937	.0278	.8619	.6960
056	.6869	.5210	.3551	.1892	.0234	.8575	.6916	.5257	.3598	.1939	.0280	.8621	.6963
059	.6871	.5212	.3553	.1894	.0235	.8577	.6918	.5259	.3600	.1941	.0282	.8624	.6965
062	.6872	.5213	.3555	.1896	.0237	.8578	.6920	.5261	.3602	.1943	.0285	.8626	.6967
417065	21.6874	22.5215	23.3556	24.1898	25.0239	25.8580	26.6922	27.5263	28.3604	29.1946	30.0287	30.8628	31.6969
068	.6875	.5217	.3558	.1899	.0241	.8582	.6924	.5265	.3606	.1948	.0289	.8630	.6972
071	.6877	.5218	.3560	.1901	.0243	.8584	.6925	.5267	.3608	.1950	.0291	.8633	.6974
074	.6878	.5220	.3561	.1903	.0244	.8586	.6927	.5269	.3610	.1952	.0293	.8635	.6976
077	.6880	.5222	.3563	.1905	.0246	.8588	.6929	.5271	.3612	.1954	.0295	.8637	.6979
417080	21.6882	22.5223	23.3565	24.1906	25.0248	25.8590	26.6931	27.5273	28.3614	29.1956	30.0298	30.8639	31.6981
083	.6883	.5225	.3566	.1908	.0250	.8591	.6933	.5275	.3616	.1958	.0300	.8641	.6983
086	.6885	.5226	.3568	.1910	.0252	.8593	.6935	.5277	.3618	.1960	.0302	.8644	.6985
089	.6886	.5228	.3570	.1912	.0253	.8595	.6937	.5279	.3621	.1962	.0304	.8646	.6988
092	.6888	.5230	.3572	.1913	.0255	.8597	.6939	.5281	.3623	.1964	.0306	.8648	.6990
417095	21.6889	22.5231	23.3573	24.1915	25.0257	25.8599	26.6941	27.5283	28.3625	29.1967	30.0308	30.8650	31.6992
098	.6891	.5233	.3575	.1917	.0259	.8601	.6943	.5285	.3627	.1969	.0311	.8653	.6994
101	.6893	.5235	.3577	.1919	.0261	.8603	.6945	.5287	.3629	.1971	.0313	.8655	.6997
104	.6894	.5236	.3578	.1920	.0262	.8604	.6947	.5289	.3631	.1973	.0315	.8657	.6999
107	.6896	.5238	.3580	.1922	.0264	.8606	.6948	.5291	.3633	.1975	.0317	.8659	.7001
417110	21.6897	22.5239	23.3582	24.1924	25.0266	25.8608	26.6950	27.5293	28.3635	29.1977	30.0319	30.8661	31.7004
113	.6899	.5241	.3583	.1926	.0268	.8610	.6952	.5295	.3637	.1979	.0321	.8664	.7006
116	.6900	.5243	.3585	.1927	.0270	.8612	.6954	.5297	.3639	.1981	.0324	.8666	.7008
119	.6902	.5244	.3587	.1929	.0271	.8614	.6956	.5299	.3641	.1983	.0326	.8668	.7010
122	.6903	.5246	.3588	.1931	.0273	.8616	.6958	.5301	.3643	.1985	.0328	.8670	.7013
417125	21.6905	22.5248	23.3590	24.1933	25.0275	25.8618	26.6960	27.5303	28.3645	29.1988	30.0330	30.8673	31.7015
128	.6907	.5249	.3592	.1934	.0277	.8619	.6962	.5304	.3647	.1990	.0332	.8675	.7017
131	.6908	.5251	.3593	.1936	.0279	.8621	.6964	.5306	.3649	.1992	.0334	.8677	.7020
134	.6910	.5252	.3595	.1938	.0280	.8623	.6966	.5308	.3651	.1994	.0336	.8679	.7022
137	.6911	.5254	.3597	.1939	.0282	.8625	.6968	.5310	.3653	.1996	.0339	.8681	.7024
417140	21.6913	22.5256	23.3598	24.1941	25.0284	25.8627	26.6970	27.5312	28.3655	29.1998	30.0341	30.8684	31.7026
143	.6914	.5257	.3600	.1943	.0286	.8629	.6972	.5314	.3657	.2000	.0343	.8686	.7029
146	.6916	.5259	.3602	.1945	.0288	.8631	.6973	.5316	.3659	.2002	.0345	.8688	.7031
149	.6917	.5260	.3603	.1946	.0289	.8632	.6975	.5318	.3661	.2004	.0347	.8690	.7033
152	.6919	.5262	.3605	.1948	.0291	.8634	.6977	.5320	.3663	.2006	.0349	.8692	.7036
417155	21.6921	22.5264	23.3607	24.1950	25.0293	25.8636	26.6979	27.5322	28.3665	29.2009	30.0352	30.8695	31.7038
158	.6922	.5265	.3608	.1952	.0295	.8638	.6981	.5324	.3667	.2011	.0354	.8697	.7040
161	.6924	.5267	.3610	.1953	.0297	.8640	.6983	.5326	.3669	.2013	.0356	.8699	.7042
164	.6925	.5269	.3612	.1955	.0298	.8642	.6985	.5328	.3672	.2015	.0358	.8701	.7045
167	.6927	.5270	.3614	.1957	.0300	.8644	.6987	.5330	.3674	.2017	.0360	.8704	.7047
417170	21.6928	22.5272	23.3615	24.1959	25.0302	25.8645	26.6989	27.5332	28.3676	29.2019	30.0362	30.8706	31.7049
173	.6930	.5273	.3617	.1960	.0304	.8647	.6991	.5334	.3678	.2021	.0365	.8708	.7051
176	.6932	.5275	.3619	.1962	.0306	.8649	.6993	.5336	.3680	.2023	.0367	.8710	.7054
179	.6933	.5277	.3620	.1964	.0307	.8651	.6995	.5338	.3682	.2025	.0369	.8712	.7056
182	.6935	.5278	.3622	.1966	.0309	.8653	.6996	.5340	.3684	.2027	.0371	.8715	.7058
417185	21.6936	22.5280	23.3624	24.1967	25.0311	25.8655	26.6998	27.5342	28.3686	29.2030	30.0373	30.8717	31.7061
188	.6938	.5282	.3625	.1969	.0313	.8657	.7000	.5344	.3688	.2032	.0375	.8719	.7063
191	.6939	.5283	.3627	.1971	.0315	.8658	.7002	.5346	.3690	.2034	.0378	.8721	.7065
194	.6941	.5285	.3629	.1973	.0316	.8660	.7004	.5348	.3692	.2036	.0380	.8724	.7067
197	.6942	.5286	.3630	.1974	.0318	.8662	.7006	.5350	.3694	.2038	.0382	.8726	.7070
417200	21.6944	22.5288	23.3632	24.1976	25.0320	25.8664	26.7008	27.5352	28.3696	29.2040	30.0384	30.8728	31.7072

MEGACYCLES PER SECOND

HARMONICS

BASIC FREQ.	78	80	82	84	86	88	90	92	94	96	100	104	108
416900	32.5182	33.3520	34.1858	35.0196	35.8534	36.6872	37.5210	38.3548	39.1886	40.0224	41.6900	43.3576	45.0252
903	.5184	.3522	.1860	.0199	.8537	.6875	.5213	.3551	.1889	.0227	.6903	.3579	.0255
906	.5187	.3525	.1863	.0201	.8539	.6877	.5215	.3554	.1892	.0230	.6906	.3582	.0258
909	.5189	.3527	.1865	.0204	.8542	.6880	.5218	.3556	.1894	.0233	.6909	.3585	.0262
912	.5191	.3530	.1868	.0206	.8544	.6883	.5221	.3559	.1897	.0236	.6912	.3588	.0265
416915	32.5194	33.3532	34.1870	35.0209	35.8547	36.6885	37.5224	38.3562	39.1900	40.0238	41.6915	43.3592	45.0268
918	.5196	.3534	.1873	.0211	.8549	.6888	.5226	.3565	.1903	.0241	.6918	.3595	.0271
921	.5198	.3537	.1875	.0214	.8552	.6890	.5229	.3567	.1906	.0244	.6921	.3598	.0275
924	.5201	.3539	.1878	.0216	.8555	.6893	.5232	.3570	.1909	.0247	.6924	.3601	.0278
927	.5203	.3542	.1880	.0219	.8557	.6896	.5234	.3573	.1911	.0250	.6927	.3604	.0281
416930	32.5205	33.3544	34.1883	35.0221	35.8560	36.6898	37.5237	38.3576	39.1914	40.0253	41.6930	43.3607	45.0284
933	.5208	.3546	.1885	.0224	.8562	.6901	.5240	.3578	.1917	.0256	.6933	.3610	.0288
936	.5210	.3549	.1888	.0226	.8565	.6904	.5242	.3581	.1920	.0259	.6936	.3613	.0291
939	.5212	.3551	.1890	.0229	.8568	.6906	.5245	.3584	.1923	.0261	.6939	.3617	.0294
942	.5215	.3554	.1892	.0231	.8570	.6909	.5248	.3587	.1925	.0264	.6942	.3620	.0297
416945	32.5217	33.3556	34.1895	35.0234	35.8573	36.6912	37.5251	38.3589	39.1928	40.0267	41.6945	43.3623	45.0301
948	.5219	.3558	.1897	.0236	.8575	.6914	.5253	.3592	.1931	.0270	.6948	.3626	.0304
951	.5222	.3561	.1900	.0239	.8578	.6917	.5256	.3595	.1934	.0273	.6951	.3629	.0307
954	.5224	.3563	.1902	.0241	.8580	.6920	.5259	.3598	.1937	.0276	.6954	.3632	.0310
957	.5226	.3566	.1905	.0244	.8583	.6922	.5261	.3600	.1940	.0279	.6957	.3635	.0314
416960	32.5229	33.3568	34.1907	35.0246	35.8586	36.6925	37.5264	38.3603	39.1942	40.0282	41.6960	43.3638	45.0317
963	.5231	.3570	.1910	.0249	.8588	.6927	.5267	.3606	.1945	.0284	.6963	.3642	.0320
966	.5233	.3573	.1912	.0251	.8591	.6930	.5269	.3609	.1948	.0287	.6966	.3645	.0323
969	.5236	.3575	.1915	.0254	.8593	.6933	.5272	.3611	.1951	.0290	.6969	.3648	.0327
972	.5238	.3578	.1917	.0256	.8596	.6935	.5275	.3614	.1954	.0293	.6972	.3651	.0330
416975	32.5241	33.3580	34.1920	35.0259	35.8599	36.6938	37.5278	38.3617	39.1957	40.0296	41.6975	43.3654	45.0333
978	.5243	.3582	.1922	.0262	.8601	.6941	.5280	.3620	.1959	.0299	.6978	.3657	.0336
981	.5245	.3585	.1924	.0264	.8604	.6943	.5283	.3623	.1962	.0302	.6981	.3660	.0339
984	.5248	.3587	.1927	.0267	.8606	.6946	.5286	.3625	.1965	.0305	.6984	.3663	.0343
987	.5250	.3590	.1929	.0269	.8609	.6949	.5288	.3628	.1968	.0308	.6987	.3666	.0346
416990	32.5252	33.3592	34.1932	35.0272	35.8611	36.6951	37.5291	38.3631	39.1971	40.0310	41.6990	43.3670	45.0349
993	.5255	.3594	.1934	.0274	.8614	.6954	.5294	.3634	.1973	.0313	.6993	.3673	.0352
996	.5257	.3597	.1937	.0277	.8617	.6956	.5296	.3636	.1976	.0316	.6996	.3676	.0356
999	.5259	.3599	.1939	.0279	.8619	.6959	.5299	.3639	.1979	.0319	.6999	.3679	.0359
417002	.5262	.3602	.1942	.0282	.8622	.6962	.5302	.3642	.1982	.0322	.7002	.3682	.0362
417005	32.5264	33.3604	34.1944	35.0284	35.8624	36.6964	37.5305	38.3645	39.1985	40.0325	41.7005	43.3685	45.0365
008	.5266	.3606	.1947	.0287	.8627	.6967	.5307	.3647	.1988	.0328	.7008	.3688	.0369
011	.5269	.3609	.1949	.0289	.8629	.6970	.5310	.3650	.1990	.0331	.7011	.3691	.0372
014	.5271	.3611	.1951	.0292	.8632	.6972	.5313	.3653	.1993	.0333	.7014	.3695	.0375
017	.5273	.3614	.1954	.0294	.8635	.6975	.5315	.3656	.1996	.0336	.7017	.3698	.0378
417020	32.5276	33.3616	34.1956	35.0297	35.8637	36.6978	37.5318	38.3658	39.1999	40.0339	41.7020	43.3701	45.0382
023	.5278	.3618	.1959	.0299	.8640	.6980	.5321	.3661	.2002	.0342	.7023	.3704	.0385
026	.5280	.3621	.1961	.0302	.8642	.6983	.5323	.3664	.2004	.0345	.7026	.3707	.0388
029	.5283	.3623	.1964	.0304	.8645	.6986	.5326	.3667	.2007	.0348	.7029	.3710	.0391
032	.5285	.3626	.1966	.0307	.8648	.6988	.5329	.3669	.2010	.0351	.7032	.3713	.0395
417035	32.5287	33.3628	34.1969	35.0309	35.8650	36.6991	37.5332	38.3672	39.2013	40.0354	41.7035	43.3716	45.0398
038	.5290	.3630	.1971	.0312	.8653	.6993	.5334	.3675	.2016	.0356	.7038	.3720	.0401
041	.5292	.3633	.1974	.0314	.8655	.6996	.5337	.3678	.2019	.0359	.7041	.3723	.0404
044	.5294	.3635	.1976	.0317	.8658	.6999	.5340	.3680	.2021	.0362	.7044	.3726	.0408
047	.5297	.3638	.1979	.0319	.8660	.7001	.5342	.3683	.2024	.0365	.7047	.3729	.0411
417050	32.5299	33.3640	34.1981	35.0322	35.8663	36.7004	37.5345	38.3686	39.2027	40.0368	41.7050	43.3732	45.0414
053	.5301	.3642	.1983	.0325	.8666	.7007	.5348	.3689	.2030	.0371	.7053	.3735	.0417
056	.5304	.3645	.1986	.0327	.8668	.7009	.5350	.3692	.2033	.0374	.7056	.3738	.0420
059	.5306	.3647	.1988	.0330	.8671	.7012	.5353	.3694	.2035	.0377	.7059	.3741	.0424
062	.5308	.3650	.1991	.0332	.8673	.7015	.5356	.3697	.2038	.0380	.7062	.3744	.0427
417065	32.5311	33.3652	34.1993	35.0335	35.8676	36.7017	37.5359	38.3700	39.2041	40.0382	41.7065	43.3748	45.0430
068	.5313	.3654	.1996	.0337	.8678	.7020	.5361	.3703	.2044	.0385	.7068	.3751	.0433
071	.5315	.3657	.1998	.0340	.8681	.7022	.5364	.3705	.2047	.0388	.7071	.3754	.0437
074	.5318	.3659	.2001	.0342	.8684	.7025	.5367	.3708	.2050	.0391	.7074	.3757	.0440
077	.5320	.3662	.2003	.0345	.8686	.7028	.5369	.3711	.2052	.0394	.7077	.3760	.0443
417080	32.5322	33.3664	34.2006	35.0347	35.8689	36.7030	37.5372	38.3714	39.2055	40.0397	41.7080	43.3763	45.0446
083	.5325	.3666	.2008	.0350	.8691	.7033	.5375	.3716	.2058	.0400	.7083	.3766	.0450
086	.5327	.3669	.2011	.0352	.8694	.7036	.5377	.3719	.2061	.0403	.7086	.3769	.0453
089	.5329	.3671	.2013	.0355	.8697	.7038	.5380	.3722	.2064	.0405	.7089	.3773	.0456
092	.5332	.3674	.2015	.0357	.8699	.7041	.5383	.3725	.2066	.0408	.7092	.3776	.0459
417095	32.5334	33.3676	34.2018	35.0360	35.8702	36.7044	37.5386	38.3727	39.2069	40.0411	41.7095	43.3779	45.0463
098	.5336	.3678	.2020	.0362	.8704	.7046	.5388	.3730	.2072	.0414	.7098	.3782	.0466
101	.5339	.3681	.2023	.0365	.8707	.7049	.5391	.3733	.2075	.0417	.7101	.3785	.0469
104	.5341	.3683	.2025	.0367	.8709	.7052	.5394	.3736	.2078	.0420	.7104	.3788	.0472
107	.5343	.3686	.2028	.0370	.8712	.7054	.5396	.3738	.2081	.0423	.7107	.3791	.0476
417110	32.5346	33.3688	34.2030	35.0372	35.8715	36.7057	37.5399	38.3741	39.2083	40.0426	41.7110	43.3794	45.0479
113	.5348	.3690	.2033	.0375	.8717	.7059	.5402	.3744	.2086	.0428	.7113	.3798	.0482
116	.5350	.3693	.2035	.0377	.8720	.7062	.5404	.3747	.2089	.0431	.7116	.3801	.0485
119	.5353	.3695	.2038	.0380	.8722	.7065	.5407	.3749	.2092	.0434	.7119	.3804	.0489
122	.5355	.3698	.2040	.0382	.8725	.7067	.5410	.3752	.2095	.0437	.7122	.3807	.0492
417125	32.5358	33.3700	34.2043	35.0385	35.8728	36.7070	37.5413	38.3755	39.2098	40.0440	41.7125	43.3810	45.0495
128	.5360	.3702	.2045	.0388	.8730	.7073	.5415	.3758	.2100	.0443	.7128	.3813	.0498
131	.5362	.3705	.2047	.0390	.8733	.7075	.5418	.3761	.2103	.0446	.7131	.3816	.0501
134	.5365	.3707	.2050	.0393	.8735	.7078	.5421	.3763	.2106	.0449	.7134	.3819	.0505
137	.5367	.3710	.2052	.0395	.8738	.7081	.5423	.3766	.2109	.0452	.7137	.3822	.0508
417140	32.5369	33.3712	34.2055	35.0398	35.8740	36.7083	37.5426	38.3769	39.2112	40.0454	41.7140	43.3826	45.0511
143	.5372	.3714	.2057	.0400	.8743	.7086	.5429	.3772	.2114	.0457	.7143	.3829	.0514
146	.5374	.3717	.2060	.0403	.8746	.7088	.5431	.3774	.2117	.0460	.7146	.3832	.0518
149	.5376	.3719	.2062	.0405	.8748	.7091	.5434	.3777	.2120	.0463	.7149	.3835	.0521
152	.5379	.3722	.2065	.0408	.8751	.7094	.5437	.3780	.2123	.0466	.7152	.3838	.0524
417155	32.5381	33.3724	34.2067	35.0410	35.8753	36.7096	37.5440	38.3783	39.2126	40.0469	41.7155	43.3841	45.0527
158	.5383	.3726	.2070	.0413	.8756	.7099	.5442	.3785	.2129	.0472	.7158	.3844	.0531
161	.5386	.3729	.2072	.0415	.8758	.7102	.5445	.3788	.2131	.0475	.7161	.3847	.0534
164	.5388	.3731	.2074	.0418	.8761	.7104	.5448	.3791	.2134	.0477	.7164	.3851	.0537
167	.5390	.3734	.2077	.0420	.8764	.7107	.5450	.3794	.2137	.0480	.7167	.3854	.0540
417170	32.5393	33.3736	34.2079	35.0423	35.8766	36.7110	37.5453	38.3796	39.2140	40.0483	41.7170	43.3857	45.0544
173	.5395	.3738	.2082	.0425	.8769	.7112	.5456	.3799	.2143	.0486	.7173	.3860	.0547
176	.5397	.3741	.2084	.0428	.8771	.7115	.5458	.3802	.2145	.0489	.7176	.3863	.0550
179	.5400	.3743	.2087	.0430	.8774	.7118	.5461	.3805	.2148	.0492	.7179	.3866	.0553
182	.5402	.3746	.2089	.0433	.8777	.7120	.5464	.3807	.2151	.0495	.7182	.3869	.0557
417185	32.5404	33.3748	34.2092	35.0435	35.8779	36.7123	37.5467	38.3810	39.2154	40.0498	41.7185	43.3872	45.0560
188	.5407	.3750	.2094	.0438	.8782	.7125	.5469	.3813	.2157	.0500	.7188	.3876	.0563
191	.5409	.3753	.2097	.0440	.8784	.7128	.5472	.3816	.2160	.0503	.7191	.3879	.0566
194	.5411	.3755	.2099	.0443	.8787	.7131	.5475	.3818	.2162	.0506	.7194	.3882	.0570
197	.5414	.3758	.2102	.0445	.8789	.7133	.5477	.3821	.2165	.0509	.7197	.3885	.0573
417200	32.5416	33.3760	34.2104	35.0448	35.8792	36.7136	37.5480	38.3824	39.2168	40.0512	41.7200	43.3888	45.0576

MEGACYCLES PER SECOND

R

HARMONICS

BASIC FREQ.	52	54	56	58	60	62	64	66	68	70	72	74	76
417200	21.6944	22.5288	23.3632	24.1976	25.0320	25.8664	26.7008	27.5352	28.3696	29.2040	30.0384	30.8728	31.7072
203	.6946	.5290	.3634	.1978	.0322	.8666	.7010	.5354	.3698	.2042	.0386	.8730	.7074
206	.6947	.5291	.3635	.1979	.0324	.8668	.7012	.5356	.3700	.2044	.0388	.8732	.7077
209	.6949	.5293	.3637	.1981	.0325	.8670	.7014	.5358	.3702	.2046	.0390	.8735	.7079
212	.6950	.5294	.3639	.1983	.0327	.8671	.7016	.5360	.3704	.2048	.0393	.8737	.7081
417215	21.6952	22.5296	23.3640	24.1985	25.0329	25.8673	26.7018	27.5362	28.3706	29.2051	30.0395	30.8739	31.7083
218	.6953	.5298	.3642	.1986	.0331	.8675	.7020	.5364	.3708	.2053	.0397	.8741	.7086
221	.6955	.5299	.3644	.1988	.0333	.8677	.7021	.5366	.3710	.2055	.0399	.8744	.7088
224	.6956	.5301	.3645	.1990	.0334	.8679	.7023	.5368	.3712	.2057	.0401	.8746	.7090
227	.6958	.5303	.3647	.1992	.0336	.8681	.7025	.5370	.3714	.2059	.0403	.8748	.7093
417230	21.6960	22.5304	23.3649	24.1993	25.0338	25.8683	26.7027	27.5372	28.3716	29.2061	30.0406	30.8750	31.7095
233	.6961	.5306	.3650	.1995	.0340	.8684	.7029	.5374	.3718	.2063	.0408	.8752	.7097
236	.6963	.5307	.3652	.1997	.0342	.8686	.7031	.5376	.3720	.2065	.0410	.8755	.7099
239	.6964	.5309	.3654	.1999	.0343	.8688	.7033	.5378	.3723	.2067	.0412	.8757	.7102
242	.6966	.5311	.3656	.2000	.0345	.8690	.7035	.5380	.3725	.2069	.0414	.8759	.7104
417245	21.6967	22.5312	23.3657	24.2002	25.0347	25.8692	26.7037	27.5382	28.3727	29.2072	30.0416	30.8761	31.7106
248	.6969	.5314	.3659	.2004	.0349	.8694	.7039	.5384	.3729	.2074	.0419	.8764	.7108
251	.6971	.5316	.3661	.2006	.0351	.8696	.7041	.5386	.3731	.2076	.0421	.8766	.7111
254	.6972	.5317	.3662	.2007	.0352	.8697	.7043	.5388	.3733	.2078	.0423	.8768	.7113
257	.6974	.5319	.3664	.2009	.0354	.8699	.7044	.5390	.3735	.2080	.0425	.8770	.7115
417260	21.6975	22.5320	23.3666	24.2011	25.0356	25.8701	26.7046	27.5392	28.3737	29.2082	30.0427	30.8772	31.7118
263	.6977	.5322	.3667	.2013	.0358	.8703	.7048	.5394	.3739	.2084	.0429	.8775	.7120
266	.6978	.5324	.3669	.2014	.0360	.8705	.7050	.5396	.3741	.2086	.0432	.8777	.7122
269	.6980	.5325	.3671	.2016	.0361	.8707	.7052	.5398	.3743	.2088	.0434	.8779	.7124
272	.6981	.5327	.3672	.2018	.0363	.8709	.7054	.5400	.3745	.2090	.0436	.8781	.7127
417275	21.6983	22.5329	23.3674	24.2020	25.0365	25.8711	26.7056	27.5402	28.3747	29.2093	30.0438	30.8784	31.7129
278	.6985	.5330	.3676	.2021	.0367	.8712	.7058	.5403	.3749	.2095	.0440	.8786	.7131
281	.6986	.5332	.3677	.2023	.0369	.8714	.7060	.5405	.3751	.2097	.0442	.8788	.7134
284	.6988	.5333	.3679	.2025	.0370	.8716	.7062	.5407	.3753	.2099	.0444	.8790	.7136
287	.6989	.5335	.3681	.2026	.0372	.8718	.7064	.5409	.3755	.2101	.0447	.8792	.7138
417290	21.6991	22.5337	23.3682	24.2028	25.0374	25.8720	26.7066	27.5411	28.3757	29.2103	30.0449	30.8795	31.7140
293	.6992	.5338	.3684	.2030	.0376	.8722	.7068	.5413	.3759	.2105	.0451	.8797	.7143
396	.6994	.5340	.3686	.2032	.0378	.8724	.7069	.5415	.3761	.2107	.0453	.8799	.7145
299	.6995	.5341	.3687	.2033	.0379	.8725	.7071	.5417	.3763	.2109	.0455	.8801	.7147
302	.6997	.5343	.3689	.2035	.0381	.8727	.7073	.5419	.3765	.2111	.0457	.8803	.7150
417305	21.6999	22.5345	23.3691	24.2037	25.0383	25.8729	26.7075	27.5421	28.3767	29.2114	30.0460	30.8806	31.7152
308	.7000	.5346	.3692	.2039	.0385	.8731	.7077	.5423	.3769	.2116	.0462	.8808	.7154
311	.7002	.5348	.3694	.2040	.0387	.8733	.7079	.5425	.3771	.2118	.0464	.8810	.7156
314	.7003	.5350	.3696	.2042	.0388	.8735	.7081	.5427	.3774	.2120	.0466	.8812	.7159
317	.7005	.5351	.3698	.2044	.0390	.8737	.7083	.5429	.3776	.2122	.0468	.8815	.7161
417320	21.7006	22.5353	23.3699	24.2046	25.0392	25.8738	26.7085	27.5431	28.3778	29.2124	30.0470	30.8817	31.7163
323	.7008	.5354	.3701	.2047	.0394	.8740	.7087	.5433	.3780	.2126	.0473	.8819	.7165
326	.7010	.5356	.3703	.2049	.0396	.8742	.7089	.5435	.3782	.2128	.0475	.8821	.7168
329	.7011	.5358	.3704	.2051	.0397	.8744	.7091	.5437	.3784	.2130	.0477	.8823	.7170
332	.7013	.5359	.3706	.2053	.0399	.8746	.7092	.5439	.3786	.2132	.0479	.8826	.7172
417335	21.7014	22.5361	23.3708	24.2054	25.0401	25.8748	26.7094	27.5441	28.3788	29.2135	30.0481	30.8828	31.7175
338	.7016	.5363	.3709	.2056	.0403	.8750	.7096	.5443	.3790	.2137	.0483	.8830	.7177
341	.7017	.5364	.3711	.2058	.0405	.8751	.7098	.5445	.3792	.2139	.0486	.8832	.7179
344	.7019	.5366	.3713	.2060	.0406	.8753	.7100	.5447	.3794	.2141	.0488	.8835	.7181
347	.7020	.5367	.3714	.2061	.0408	.8755	.7102	.5449	.3796	.2143	.0490	.8837	.7184
417350	21.7022	22.5369	23.3716	24.2063	25.0410	25.8757	26.7104	27.5451	28.3798	29.2145	30.0492	30.8839	31.7186
353	.7024	.5371	.3718	.2065	.0412	.8759	.7106	.5453	.3800	.2147	.0494	.8841	.7188
356	.7025	.5372	.3719	.2066	.0414	.8761	.7108	.5455	.3802	.2149	.0496	.8843	.7191
359	.7027	.5374	.3721	.2068	.0415	.8763	.7110	.5457	.3804	.2151	.0498	.8846	.7193
362	.7028	.5375	.3723	.2070	.0417	.8764	.7112	.5459	.3806	.2153	.0501	.8848	.7195
417365	21.7030	22.5377	23.3724	24.2072	25.0419	25.8766	26.7114	27.5461	28.3808	29.2156	30.0503	30.8850	31.7197
368	.7031	.5379	.3726	.2073	.0421	.8768	.7116	.5463	.3810	.2158	.0505	.8852	.7200
371	.7033	.5380	.3728	.2075	.0423	.8770	.7117	.5465	.3812	.2160	.0507	.8855	.7202
374	.7034	.5382	.3729	.2077	.0424	.8772	.7119	.5467	.3814	.2162	.0509	.8857	.7204
377	.7036	.5384	.3731	.2079	.0426	.8774	.7121	.5469	.3816	.2164	.0511	.8859	.7207
417380	21.7038	22.5385	23.3733	24.2080	25.0428	25.8776	26.7123	27.5471	28.3818	29.2166	30.0514	30.8861	31.7209
383	.7039	.5387	.3734	.2082	.0430	.8777	.7125	.5473	.3820	.2168	.0516	.8863	.7211
386	.7041	.5388	.3736	.2084	.0432	.8779	.7127	.5475	.3822	.2170	.0518	.8866	.7213
389	.7042	.5390	.3738	.2086	.0433	.8781	.7129	.5477	.3825	.2172	.0520	.8868	.7216
392	.7044	.5392	.3740	.2087	.0435	.8783	.7131	.5479	.3827	.2174	.0522	.8870	.7218
417395	21.7045	22.5393	23.3741	24.2089	25.0437	25.8785	26.7133	27.5481	28.3829	29.2177	30.0524	30.8872	31.7220
398	.7047	.5395	.3743	.2091	.0439	.8787	.7135	.5483	.3831	.2179	.0527	.8875	.7222
401	.7049	.5397	.3745	.2093	.0441	.8789	.7137	.5485	.3833	.2181	.0529	.8877	.7225
404	.7050	.5398	.3746	.2094	.0442	.8790	.7139	.5487	.3835	.2183	.0531	.8879	.7227
407	.7052	.5400	.3748	.2096	.0444	.8792	.7140	.5489	.3837	.2185	.0533	.8881	.7229
417410	21.7053	22.5401	23.3750	24.2098	25.0446	25.8794	26.7142	27.5491	28.3839	29.2187	30.0535	30.8883	31.7232
413	.7055	.5403	.3751	.2100	.0448	.8796	.7144	.5493	.3841	.2189	.0537	.8886	.7234
416	.7056	.5405	.3753	.2101	.0450	.8798	.7146	.5495	.3843	.2191	.0540	.8888	.7236
419	.7058	.5406	.3755	.2103	.0451	.8800	.7148	.5497	.3845	.2193	.0542	.8890	.7238
422	.7059	.5408	.3756	.2105	.0453	.8802	.7150	.5499	.3847	.2195	.0544	.8892	.7241
417425	21.7061	22.5410	23.3758	24.2107	25.0455	25.8804	26.7152	27.5501	28.3849	29.2198	30.0546	30.8895	31.7243
428	.7063	.5411	.3760	.2108	.0457	.8805	.7154	.5502	.3851	.2200	.0548	.8897	.7245
431	.7064	.5413	.3761	.2110	.0459	.8807	.7156	.5504	.3853	.2202	.0550	.8899	.7248
434	.7066	.5414	.3763	.2112	.0460	.8809	.7158	.5506	.3855	.2204	.0552	.8901	.7250
437	.7067	.5416	.3765	.2113	.0462	.8811	.7160	.5508	.3857	.2206	.0555	.8903	.7252
417440	21.7069	22.5418	23.3766	24.2115	25.0464	25.8813	26.7162	27.5510	28.3859	29.2208	30.0557	30.8906	31.7254
443	.7070	.5419	.3768	.2117	.0466	.8815	.7164	.5512	.3861	.2210	.0559	.8908	.7257
446	.7072	.5421	.3770	.2119	.0468	.8817	.7165	.5514	.3863	.2212	.0561	.8910	.7259
449	.7073	.5422	.3771	.2120	.0469	.8818	.7167	.5516	.3865	.2214	.0563	.8912	.7261
452	.7075	.5424	.3773	.2122	.0471	.8820	.7169	.5518	.3867	.2216	.0565	.8914	.7264
417455	21.7077	22.5426	23.3775	24.2124	25.0473	25.8822	26.7171	27.5520	28.3869	29.2219	30.0568	30.8917	31.7266
458	.7078	.5427	.3776	.2126	.0475	.8824	.7173	.5522	.3871	.2221	.0570	.8919	.7268
461	.7080	.5429	.3778	.2127	.0477	.8826	.7175	.5524	.3873	.2223	.0572	.8921	.7270
464	.7081	.5431	.3780	.2129	.0478	.8828	.7177	.5526	.3876	.2225	.0574	.8923	.7273
467	.7083	.5432	.3782	.2131	.0480	.8830	.7179	.5528	.3878	.2227	.0576	.8926	.7275
417470	21.7084	22.5434	23.3783	24.2133	25.0482	25.8831	26.7181	27.5530	28.3880	29.2229	30.0578	30.8928	31.7277
473	.7086	.5435	.3785	.2134	.0484	.8833	.7183	.5532	.3882	.2231	.0581	.8930	.7279
476	.7088	.5437	.3787	.2136	.0486	.8835	.7185	.5534	.3884	.2233	.0583	.8932	.7282
479	.7089	.5439	.3788	.2138	.0487	.8837	.7187	.5536	.3886	.2235	.0585	.8934	.7284
482	.7091	.5440	.3790	.2140	.0489	.8839	.7188	.5538	.3888	.2237	.0587	.8937	.7286
417485	21.7092	22.5442	23.3792	24.2141	25.0491	25.8841	26.7190	27.5540	28.3890	29.2240	30.0589	30.8939	31.7289
488	.7094	.5444	.3793	.2143	.0493	.8843	.7192	.5542	.3892	.2242	.0591	.8941	.7291
491	.7095	.5445	.3795	.2145	.0495	.8844	.7194	.5544	.3894	.2244	.0594	.8943	.7293
494	.7097	.5447	.3797	.2147	.0496	.8846	.7196	.5546	.3896	.2246	.0596	.8946	.7295
497	.7098	.5448	.3798	.2148	.0498	.8848	.7198	.5548	.3898	.2248	.0598	.8948	.7298
417500	21.7100	22.5450	23.3800	24.2150	25.0500	25.8850	26.7200	27.5550	28.3900	29.2250	30.0600	30.8950	31.7300

MEGACYCLES PER SECOND

HARMONICS

BASIC FREQ.	78	80	82	84	86	88	90	92	94	96	100	104	108
417200	32.5416	33.3760	34.2104	35.0448	35.8792	36.7136	37.5480	38.3824	39.2168	40.0512	41.7200	43.3888	45.0576
203	.5418	.3762	.2106	.0451	.8795	.7139	.5483	.3827	.2171	.0515	.7203	.3891	.0579
206	.5421	.3765	.2109	.0453	.8797	.7141	.5485	.3830	.2174	.0518	.7206	.3894	.0582
209	.5423	.3767	.2111	.0456	.8800	.7144	.5488	.3832	.2176	.0521	.7209	.3897	.0586
212	.5425	.3770	.2114	.0458	.8802	.7147	.5491	.3835	.2179	.0524	.7212	.3900	.0589
417215	32.5428	33.3772	34.2116	35.0461	35.8805	36.7149	37.5494	38.3838	39.2182	40.0526	41.7215	43.3904	45.0592
218	.5430	.3774	.2119	.0463	.8807	.7152	.5496	.3841	.2185	.0529	.7218	.3907	.0595
221	.5432	.3777	.2121	.0466	.8810	.7154	.5499	.3843	.2188	.0532	.7221	.3910	.0599
224	.5435	.3779	.2124	.0468	.8813	.7157	.5502	.3846	.2191	.0535	.7224	.3913	.0602
227	.5437	.3782	.2126	.0471	.8815	.7160	.5504	.3849	.2193	.0538	.7227	.3916	.0605
417230	32.5439	33.3784	34.2129	35.0473	35.8818	36.7162	37.5507	38.3852	39.2196	40.0541	41.7230	43.3919	45.0608
233	.5442	.3786	.2131	.0476	.8820	.7165	.5510	.3854	.2199	.0544	.7233	.3922	.0612
236	.5444	.3789	.2134	.0478	.8823	.7168	.5512	.3857	.2202	.0547	.7236	.3925	.0615
239	.5446	.3791	.2136	.0481	.8826	.7170	.5515	.3860	.2205	.0549	.7239	.3929	.0618
242	.5449	.3794	.2138	.0483	.8828	.7173	.5518	.3863	.2207	.0552	.7242	.3932	.0621
417245	32.5451	33.3796	34.2141	35.0486	35.8831	36.7176	37.5521	38.3865	39.2210	40.0555	41.7245	43.3935	45.0625
248	.5453	.3798	.2143	.0488	.8833	.7178	.5523	.3868	.2213	.0558	.7248	.3938	.0628
251	.5456	.3801	.2146	.0491	.8836	.7181	.5526	.3871	.2216	.0561	.7251	.3941	.0631
254	.5458	.3803	.2148	.0493	.8838	.7184	.5529	.3874	.2219	.0564	.7254	.3944	.0634
257	.5460	.3806	.2151	.0496	.8841	.7186	.5531	.3876	.2222	.0567	.7257	.3947	.0638
417260	32.5463	33.3808	34.2153	35.0498	35.8844	36.7189	37.5534	38.3879	39.2224	40.0570	41.7260	43.3950	45.0641
263	.5465	.3810	.2156	.0501	.8846	.7191	.5537	.3882	.2227	.0572	.7263	.3954	.0644
266	.5467	.3813	.2158	.0503	.8849	.7194	.5539	.3885	.2230	.0575	.7266	.3957	.0647
269	.5470	.3815	.2161	.0506	.8851	.7197	.5542	.3887	.2233	.0578	.7269	.3960	.0651
272	.5472	.3818	.2163	.0508	.8854	.7199	.5545	.3890	.2236	.0581	.7272	.3963	.0654
417275	32.5475	33.3820	34.2166	35.0511	35.8857	36.7202	37.5548	38.3893	39.2239	40.0584	41.7275	43.3966	45.0657
278	.5477	.3822	.2168	.0514	.8859	.7205	.5550	.3896	.2241	.0587	.7278	.3969	.0660
281	.5479	.3825	.2170	.0516	.8862	.7207	.5553	.3899	.2244	.0590	.7281	.3972	.0663
284	.5482	.3827	.2173	.0519	.8864	.7210	.5556	.3901	.2247	.0593	.7284	.3975	.0667
287	.5484	.3830	.2175	.0521	.8867	.7213	.5558	.3904	.2250	.0596	.7287	.3978	.0670
417290	32.5486	33.3832	34.2178	35.0524	35.8869	36.7215	37.5561	38.3907	39.2253	40.0598	41.7290	43.3982	45.0673
293	.5489	.3834	.2180	.0526	.8872	.7218	.5564	.3910	.2255	.0601	.7293	.3985	.0676
296	.5491	.3837	.2183	.0529	.8875	.7220	.5566	.3912	.2258	.0604	.7296	.3988	.0680
299	.5493	.3839	.2185	.0531	.8877	.7223	.5569	.3915	.2261	.0607	.7299	.3991	.0683
302	.5496	.3842	.2188	.0534	.8880	.7226	.5572	.3918	.2264	.0610	.7302	.3994	.0686
417305	32.5498	33.3844	34.2190	35.0536	35.8882	36.7228	37.5575	38.3921	39.2267	40.0613	41.7305	43.3997	45.0689
308	.5500	.3846	.2193	.0539	.8885	.7231	.5577	.3923	.2270	.0616	.7308	.4000	.0693
311	.5503	.3849	.2195	.0541	.8887	.7234	.5580	.3926	.2272	.0619	.7311	.4003	.0696
314	.5505	.3851	.2197	.0544	.8890	.7236	.5583	.3929	.2275	.0621	.7314	.4007	.0699
317	.5507	.3854	.2200	.0546	.8893	.7239	.5585	.3932	.2278	.0624	.7317	.4010	.0702
417320	32.5510	33.3856	34.2202	35.0549	35.8895	36.7242	37.5588	38.3934	39.2281	40.0627	41.7320	43.4013	45.0706
323	.5512	.3858	.2205	.0551	.8898	.7244	.5591	.3937	.2284	.0630	.7323	.4016	.0709
326	.5514	.3861	.2207	.0554	.8900	.7247	.5593	.3940	.2286	.0633	.7326	.4019	.0712
329	.5517	.3863	.2210	.0556	.8903	.7250	.5596	.3943	.2289	.0636	.7329	.4022	.0715
332	.5519	.3866	.2212	.0559	.8906	.7252	.5599	.3945	.2292	.0639	.7332	.4025	.0719
417335	32.5521	33.3868	34.2215	35.0561	35.8908	36.7255	37.5602	38.2948	39.2295	40.0642	41.7335	43.4028	45.0722
338	.5524	.3870	.2217	.0564	.8911	.7257	.5604	.3951	.2298	.0644	.7338	.4032	.0725
341	.5526	.3873	.2220	.0566	.8913	.7260	.5607	.3954	.2301	.0647	.7341	.4035	.0728
344	.5528	.3875	.2222	.0569	.8916	.7263	.5610	.2956	.2303	.0650	.7344	.4038	.0732
347	.5531	.3878	.2225	.0571	.8918	.7265	.5612	.3959	.2306	.0653	.7347	.4041	.0735
417350	32.5533	33.3880	34.2227	35.0574	35.8921	36.7268	37.5615	38.3962	39.2309	40.0656	41.7350	43.4044	45.0738
353	.5535	.3882	.2229	.0577	.8924	.7271	.5618	.3965	.2312	.0659	.7353	.4047	.0741
356	.5538	.3885	.2232	.0579	.8926	.7273	.5620	.3968	.2315	.0662	.7356	.4050	.0744
359	.5540	.3887	.2234	.0582	.8929	.7276	.5623	.3970	.2317	.0665	.7359	.4053	.0748
362	.5542	.3890	.2237	.0584	.8931	.7279	.5626	.3973	.2320	.0668	.7362	.4056	.0751
417365	32.5545	33.3892	34.2239	35.0587	35.8934	36.7281	37.5629	38.3976	39.2323	40.0670	41.7365	43.4060	45.0754
368	.5547	.3894	.2242	.0589	.8936	.7284	.5631	.3979	.2326	.0673	.7368	.4063	.0757
371	.5549	.3897	.2244	.0592	.8939	.7286	.5634	.3981	.2329	.0676	.7371	.4066	.0761
374	.5552	.3899	.2247	.0594	.8942	.7289	.5637	.3984	.2332	.0679	.7374	.4069	.0764
377	.5554	.3902	.2249	.0597	.8944	.7292	.5639	.3987	.2334	.0682	.7377	.4072	.0767
417380	32.5556	33.3904	34.2252	35.0599	35.8947	36.7294	27.5642	38.3990	39.2337	40.0685	41.7380	43.4075	45.0770
383	.5559	.3906	.2254	.0602	.8949	.7297	.5645	.3992	.2340	.0688	.7383	.4078	.0774
386	.5561	.3909	.2257	.0604	.8952	.7300	.5647	.3995	.2343	.0691	.7386	.4081	.0777
389	.5563	.3911	.2259	.0607	.8955	.7302	.5650	.3998	.2346	.0693	.7389	.4085	.0780
392	.5566	.3914	.2261	.0609	.8957	.7305	.5653	.4001	.2348	.0696	.7392	.4088	.0783
417395	32.5568	33.3916	34.2264	35.0612	35.8960	36.7308	37.5656	38.4003	39.2351	40.0699	41.7395	43.4091	45.0787
398	.5570	.3918	.2266	.0614	.8962	.7310	.5658	.4006	.2354	.0702	.7398	.4094	.0790
401	.5573	.3921	.2269	.0617	.8965	.7313	.5661	.4009	.2357	.0705	.7401	.4097	.0793
404	.5575	.3923	.2271	.0619	.8967	.7316	.5664	.4012	.2360	.0708	.7404	.4100	.0796
407	.5577	.3926	.2274	.0622	.8970	.7318	.5666	.4014	.2363	.0711	.7407	.4103	.0800
417410	32.5580	33.3928	34.2276	35.0624	35.8973	36.7321	27.5669	38.4017	39.2365	40.0714	41.7410	43.4106	45.0803
413	.5582	.3930	.2279	.0627	.8975	.7323	.5672	.4020	.2368	.0716	.7413	.4110	.0806
416	.5584	.3933	.2281	.0629	.8978	.7326	.5674	.4023	.2371	.0719	.7416	.4113	.0809
419	.5587	.3935	.2284	.0632	.8980	.7329	.5677	.4025	.2374	.0722	.7419	.4116	.0813
422	.5589	.3938	.2286	.0634	.8983	.7331	.5680	.4028	.2377	.0725	.7422	.4119	.0816
417425	32.5592	33.3940	34.2289	35.0637	35.8986	36.7334	37.5683	38.4031	39.2380	40.0728	41.7425	43.4122	45.0819
428	.5594	.3942	.2291	.0640	.8988	.7337	.5685	.4034	.2382	.0731	.7428	.4125	.0822
431	.5596	.3945	.2293	.0642	.8991	.7339	.5688	.4037	.2385	.0734	.7431	.4128	.0825
434	.5599	.3947	.2296	.0645	.8993	.7342	.5691	.4039	.2388	.0737	.7434	.4131	.0829
437	.5601	.3950	.2298	.0647	.8996	.7345	.5693	.4042	.2391	.0740	.7437	.4134	.0832
417440	32.5603	33.3952	34.2301	35.0650	35.8998	36.7347	37.5696	38.4045	39.2394	40.0742	41.7440	43.4138	45.0835
443	.5606	.3954	.2303	.0652	.9001	.7350	.5699	.4048	.2396	.0745	.7443	.4141	.0838
446	.5608	.3957	.2306	.0655	.9004	.7352	.5701	.4050	.2399	.0748	.7446	.4144	.0842
449	.5610	.3959	.2308	.0657	.9006	.7355	.5704	.4053	.2402	.0751	.7449	.4147	.0845
452	.5613	.3962	.2311	.0660	.9009	.7358	.5707	.4056	.2405	.0754	.7452	.4150	.0848
417455	32.5615	33.3964	34.2313	35.0662	35.9011	36.7360	37.5710	38.4059	39.2408	40.0757	41.7455	43.4153	45.0851
458	.5617	.3966	.2316	.0665	.9014	.7363	.5712	.4061	.2411	.0760	.7458	.4156	.0855
461	.5620	.3969	.2318	.0667	.9016	.7366	.5715	.4064	.2413	.0763	.7461	.4159	.0858
464	.5622	.3971	.2320	.0670	.9019	.7368	.5718	.4067	.2416	.0765	.7464	.4163	.0861
467	.5624	.3974	.2323	.0672	.9022	.7371	.5720	.4070	.2419	.0768	.7467	.4166	.0864
417470	32.5627	33.3976	34.2325	35.0675	35.9024	36.7374	37.5723	38.4072	39.2422	40.0771	41.7470	43.4169	45.0868
473	.5629	.3978	.2328	.0677	.9027	.7376	.5726	.4075	.2425	.0774	.7473	.4172	.0871
476	.5631	.3981	.2330	.0680	.9029	.7379	.5728	.4078	.2427	.0777	.7476	.4175	.0874
479	.5634	.3983	.2333	.0682	.9032	.7382	.5731	.4081	.2430	.0780	.7479	.4178	.0877
482	.5636	.3986	.2335	.0685	.9035	.7384	.5734	.4083	.2433	.0783	.7482	.4181	.0881
417485	32.5638	33.3988	34.2338	35.0687	35.9037	36.7387	37.5737	38.4086	39.2436	40.0786	41.7485	43.4184	45.0884
488	.5641	.3990	.2340	.0690	.9040	.7389	.5739	.4089	.2439	.0788	.7488	.4188	.0887
491	.5643	.3993	.2343	.0692	.9042	.7392	.5742	.4092	.2442	.0791	.7491	.4191	.0890
494	.5645	.3995	.2345	.0695	.9045	.7395	.5745	.4094	.2444	.0794	.7494	.4194	.0894
497	.5648	.3998	.2348	.0697	.9047	.7397	.5747	.4097	.2447	.0797	.7497	.4197	.0897
417500	32.5650	33.4000	34.2350	35.0700	35.9050	36.7400	37.5750	38.4100	39.2450	40.0800	41.7500	43.4200	45.0900

MEGACYCLES PER SECOND

H A R M O N I C S

BASIC FREQ.	52	54	56	58	60	62	64	66	68	70	72	74	76
417500	21.7100	22.5450	23.3800	24.2150	25.0500	25.8850	26.7200	27.5550	28.3900	29.2250	30.0600	30.8950	31.7300
503	.7102	.5452	.3802	.2152	.0502	.8852	.7202	.5552	.3902	.2252	.0602	.8952	.7302
506	.7103	.5453	.3803	.2153	.0504	.8854	.7204	.5554	.3904	.2254	.0604	.8954	.7305
509	.7105	.5455	.3805	.2155	.0505	.8856	.7206	.5556	.3906	.2256	.0606	.8957	.7307
512	.7106	.5456	.3807	.2157	.0507	.8857	.7208	.5558	.3908	.2258	.0609	.8959	.7309
417515	21.7108	22.5458	23.3808	24.2159	25.0509	25.8859	26.7210	27.5560	28.3910	29.2261	30.0611	30.8961	31.7311
518	.7109	.5460	.3810	.2160	.0511	.8861	.7212	.5562	.3912	.2263	.0613	.8963	.7314
521	.7111	.5461	.3812	.2162	.0513	.8863	.7213	.5564	.3914	.2265	.0615	.8966	.7316
524	.7112	.5463	.3813	.2164	.0514	.8865	.7215	.5566	.3916	.2267	.0617	.8968	.7318
527	.7114	.5465	.3815	.2166	.0516	.8867	.7217	.5568	.3918	.2269	.0619	.8970	.7321
417530	21.7116	22.5466	23.3817	24.2167	25.0518	25.8869	26.7219	27.5570	28.3920	29.2271	30.0622	30.8972	31.7323
533	.7117	.5468	.3818	.2169	.0520	.8870	.7221	.5572	.3922	.2273	.0624	.8974	.7325
536	.7119	.5469	.3820	.2171	.0522	.8872	.7223	.5574	.3924	.2275	.0626	.8977	.7327
539	.7120	.5471	.3822	.2173	.0523	.8874	.7225	.5576	.3927	.2277	.0628	.8979	.7330
542	.7122	.5473	.3824	.2174	.0525	.8876	.7227	.5578	.3929	.2279	.0630	.8981	.7332
417545	21.7123	22.5474	23.3825	24.2176	25.0527	25.8878	26.7229	27.5580	28.3931	29.2282	30.0632	30.8983	31.7334
548	.7125	.5476	.3827	.2178	.0529	.8880	.7231	.5582	.3933	.2284	.0635	.8986	.7336
551	.7127	.5478	.3829	.2180	.0531	.8882	.7233	.5584	.3935	.2286	.0637	.8988	.7339
554	.7128	.5479	.3830	.2181	.0532	.8883	.7235	.5586	.3937	.2288	.0639	.8990	.7341
557	.7130	.5481	.3832	.2183	.0534	.8885	.7236	.5588	.3939	.2290	.0641	.8992	.7343
417560	21.7131	22.5482	23.3834	24.2185	25.0536	25.8887	26.7238	27.5590	28.3941	29.2292	30.0643	30.8994	31.7346
563	.7133	.5484	.3835	.2187	.0538	.8889	.7240	.5592	.3943	.2294	.0645	.8997	.7348
566	.7134	.5486	.3837	.2188	.0540	.8891	.7242	.5594	.3945	.2296	.0648	.8999	.7350
569	.7136	.5487	.3839	.2190	.0541	.8893	.7244	.5596	.3947	.2298	.0650	.9001	.7352
572	.7137	.5489	.3840	.2192	.0543	.8895	.7246	.5598	.3949	.2300	.0652	.9003	.7355
417575	21.7139	22.5491	23.3842	24.2194	25.0545	25.8897	26.7248	27.5600	28.3951	29.2303	30.0654	30.9006	31.7357
578	.7141	.5492	.3844	.2195	.0547	.8898	.7250	.5601	.3953	.2305	.0656	.9008	.7359
581	.7142	.5494	.3845	.2197	.0549	.8900	.7252	.5603	.3955	.2307	.0658	.9010	.7362
584	.7144	.5495	.3847	.2199	.0550	.8902	.7254	.5605	.3957	.2309	.0660	.9012	.7364
587	.7145	.5497	.3849	.2200	.0552	.8904	.7256	.5607	.3959	.2311	.0663	.9014	.7366
417590	21.7147	22.5499	23.3850	24.2202	25.0554	25.8906	26.7258	27.5609	28.3961	29.2313	30.0665	30.9017	31.7368
593	.7148	.5500	.3852	.2204	.0556	.8908	.7260	.5611	.3963	.2315	.0667	.9019	.7371
596	.7150	.5502	.3854	.2206	.0558	.8910	.7261	.5613	.3965	.2317	.0669	.9021	.7373
599	.7151	.5503	.3855	.2207	.0559	.8911	.7263	.5615	.3967	.2319	.0671	.9023	.7375
602	.7153	.5505	.3857	.2209	.0561	.8913	.7265	.5617	.3969	.2321	.0673	.9025	.7378
417605	21.7155	22.5507	23.3859	24.2211	25.0563	25.8915	26.7267	27.5619	28.3971	29.2324	30.0676	30.9028	31.7380
608	.7156	.5508	.3860	.2213	.0565	.8917	.7269	.5621	.3973	.2326	.0678	.9030	.7382
611	.7158	.5510	.3862	.2214	.0567	.8919	.7271	.5623	.3975	.2328	.0680	.9032	.7384
614	.7159	.5512	.3864	.2216	.0568	.8921	.7273	.5625	.3978	.2330	.0682	.9034	.7387
617	.7161	.5513	.3866	.2218	.0570	.8923	.7275	.5627	.3980	.2332	.0684	.9037	.7389
417620	21.7162	22.5515	23.3867	24.2220	25.0572	25.8924	26.7277	27.5629	28.3982	29.2334	30.0686	30.9039	31.7391
623	.7164	.5516	.3869	.2221	.0574	.8926	.7279	.5631	.3984	.2336	.0689	.9041	.7393
626	.7166	.5518	.3871	.2223	.0576	.8928	.7281	.5633	.3986	.2338	.0691	.9043	.7396
629	.7167	.5520	.3872	.2225	.0577	.8930	.7283	.5635	.3988	.2340	.0693	.9045	.7398
632	.7169	.5521	.3874	.2227	.0579	.8932	.7284	.5637	.3990	.2342	.0695	.9048	.7400
417635	21.7170	22.5523	23.3876	24.2228	25.0581	25.8934	26.7286	27.5639	28.3992	29.2345	30.0697	30.9050	31.7403
638	.7172	.5525	.3877	.2230	.0583	.8936	.7288	.5641	.3994	.2347	.0699	.9052	.7405
641	.7173	.5526	.3879	.2232	.0585	.8937	.7290	.5643	.3996	.2349	.0702	.9054	.7407
644	.7175	.5528	.3881	.2234	.0586	.8939	.7292	.5645	.3998	.2351	.0704	.9057	.7409
647	.7176	.5529	.3882	.2235	.0588	.8941	.7294	.5647	.4000	.2353	.0706	.9059	.7412
417650	21.7178	22.5531	23.3884	24.2237	25.0590	25.8943	26.7296	27.5649	28.4002	29.2355	30.0708	30.9061	31.7414
653	.7180	.5533	.3886	.2239	.0592	.8945	.7298	.5651	.4004	.2357	.0710	.9063	.7416
656	.7181	.5534	.3887	.2240	.0594	.8947	.7300	.5653	.4006	.2359	.0712	.9065	.7419
659	.7183	.5536	.3889	.2242	.0595	.8949	.7302	.5655	.4008	.2361	.0714	.9068	.7421
662	.7184	.5537	.3891	.2244	.0597	.8950	.7304	.5657	.4010	.2363	.0717	.9070	.7423
417665	21.7186	22.5539	23.3892	24.2246	25.0599	25.8952	26.7306	27.5659	28.4012	29.2366	30.0719	30.9072	31.7425
668	.7187	.5541	.3894	.2247	.0601	.8954	.7308	.5661	.4014	.2368	.0721	.9074	.7428
671	.7189	.5542	.3896	.2249	.0603	.8956	.7309	.5663	.4016	.2370	.0723	.9077	.7430
674	.7190	.5544	.3897	.2251	.0604	.8958	.7311	.5665	.4018	.2372	.0725	.9079	.7432
677	.7192	.5546	.3899	.2253	.0606	.8960	.7313	.5667	.4020	.2374	.0727	.9081	.7435
417680	21.7194	22.5547	23.3901	24.2254	25.0608	25.8962	26.7315	27.5669	28.4022	29.2376	30.0730	30.9083	31.7437
683	.7195	.5549	.3902	.2256	.0610	.8963	.7317	.5671	.4024	.2378	.0732	.9085	.7439
686	.7197	.5550	.3904	.2258	.0612	.8965	.7319	.5673	.4026	.2380	.0734	.9088	.7441
689	.7198	.5552	.3906	.2260	.0613	.8967	.7321	.5675	.4029	.2382	.0736	.9090	.7444
692	.7200	.5554	.3908	.2261	.0615	.8969	.7323	.5677	.4031	.2384	.0738	.9092	.7446
417695	21.7201	22.5555	23.3909	24.2263	25.0617	25.8971	26.7325	27.5679	28.4033	29.2387	30.0740	30.9094	31.7448
698	.7203	.5557	.3911	.2265	.0619	.8973	.7327	.5681	.4035	.2389	.0743	.9097	.7450
701	.7205	.5559	.3913	.2267	.0621	.8975	.7329	.5683	.4037	.2391	.0745	.9099	.7453
704	.7206	.5560	.3914	.2268	.0622	.8976	.7331	.5685	.4039	.2393	.0747	.9101	.7455
707	.7208	.5562	.3916	.2270	.0624	.8978	.7332	.5687	.4041	.2395	.0749	.9103	.7457
417710	21.7209	22.5563	23.3918	24.2272	25.0626	25.8980	26.7334	27.5689	28.4043	29.2397	30.0751	30.9105	31.7460
713	.7211	.5565	.3919	.2274	.0628	.8982	.7336	.5691	.4045	.2399	.0753	.9108	.7462
716	.7212	.5567	.3921	.2275	.0630	.8984	.7338	.5693	.4047	.2401	.0756	.9110	.7464
719	.7214	.5568	.3923	.2277	.0631	.8986	.7340	.5695	.4049	.2403	.0758	.9112	.7466
722	.7215	.5570	.3924	.2279	.0633	.8988	.7342	.5697	.4051	.2405	.0760	.9114	.7469
417725	21.7217	22.5572	23.3926	24.2281	25.0635	25.8990	26.7344	27.5699	28.4053	29.2408	30.0762	30.9117	31.7471
728	.7219	.5573	.3928	.2282	.0637	.8991	.7346	.5700	.4055	.2410	.0764	.9119	.7473
731	.7220	.5575	.3929	.2284	.0639	.8993	.7348	.5702	.4057	.2412	.0766	.9121	.7476
734	.7222	.5576	.3931	.2286	.0640	.8995	.7350	.5704	.4059	.2414	.0768	.9123	.7478
737	.7223	.5578	.3933	.2287	.0642	.8997	.7352	.5706	.4061	.2416	.0771	.9125	.7480
417740	21.7225	22.5580	23.3934	24.2289	25.0644	25.8999	26.7354	27.5708	28.4063	29.2418	30.0773	30.9128	31.7482
743	.7226	.5581	.3936	.2291	.0646	.9001	.7356	.5710	.4065	.2420	.0775	.9130	.7485
746	.7228	.5583	.3938	.2293	.0648	.9003	.7357	.5712	.4067	.2422	.0777	.9132	.7487
749	.7229	.5584	.3939	.2294	.0649	.9004	.7359	.5714	.4069	.2424	.0779	.9134	.7489
752	.7231	.5586	.3941	.2296	.0651	.9006	.7361	.5716	.4071	.2426	.0781	.9136	.7492
417755	21.7233	22.5588	23.3943	24.2298	25.0653	25.9008	26.7363	27.5718	28.4073	29.2429	30.0784	30.9139	31.7494
758	.7234	.5589	.3944	.2300	.0655	.9010	.7365	.5720	.4075	.2431	.0786	.9141	.7496
761	.7236	.5591	.3946	.2301	.0657	.9012	.7367	.5722	.4077	.2433	.0788	.9143	.7498
764	.7237	.5593	.3948	.2303	.0658	.9014	.7369	.5724	.4080	.2435	.0790	.9145	.7501
767	.7239	.5594	.3950	.2305	.0660	.9016	.7371	.5726	.4082	.2437	.0792	.9148	.7503
417770	21.7240	22.5596	23.3951	24.2307	25.0662	25.9017	26.7373	27.5728	28.4084	29.2439	30.0794	30.9150	31.7505
773	.7242	.5597	.3953	.2308	.0664	.9019	.7375	.5730	.4086	.2441	.0797	.9152	.7507
776	.7244	.5599	.3955	.2310	.0666	.9021	.7377	.5732	.4088	.2443	.0799	.9154	.7510
779	.7245	.5601	.3956	.2312	.0667	.9023	.7379	.5734	.4090	.2445	.0801	.9156	.7512
782	.7247	.5602	.3958	.2314	.0669	.9025	.7380	.5736	.4092	.2447	.0803	.9159	.7514
417785	21.7248	22.5604	23.3960	24.2315	25.0671	25.9027	26.7382	27.5738	28.4094	29.2450	30.0805	30.9161	31.7517
788	.7250	.5606	.3961	.2317	.0673	.9029	.7384	.5740	.4096	.2452	.0807	.9163	.7519
791	.7251	.5607	.3963	.2319	.0675	.9030	.7386	.5742	.4098	.2454	.0810	.9165	.7521
794	.7253	.5609	.3965	.2321	.0676	.9032	.7388	.5744	.4100	.2456	.0812	.9168	.7523
797	.7254	.5610	.3966	.2322	.0678	.9034	.7390	.5746	.4102	.2458	.0814	.9170	.7526
417800	21.7256	22.5612	23.3968	24.2324	25.0680	25.9036	26.7392	27.5748	28.4104	29.2460	30.0816	30.9172	31.7528

MEGACYCLES PER SECOND

HARMONICS

BASIC FREQ.	78	80	82	84	86	88	90	92	94	96	100	104	108
417500	32.5650	33.4000	34.2350	35.0700	35.9050	36.7400	37.5750	38.4100	39.2450	40.0800	41.7500	43.4200	45.0900
503	.5652	.4002	.2352	.0703	.9053	.7403	.5753	.4103	.2453	.0803	.7503	.4203	.0903
506	.5655	.4005	.2355	.0705	.9055	.7405	.5755	.4106	.2456	.0806	.7506	.4206	.0906
509	.5657	.4007	.2357	.0708	.9058	.7408	.5758	.4108	.2458	.0809	.7509	.4209	.0910
512	.5659	.4010	.2360	.0710	.9060	.7411	.5761	.4111	.2461	.0812	.7512	.4212	.0913
417515	32.5662	33.4012	34.2362	35.0713	35.9063	36.7413	37.5764	38.4114	39.2464	40.0814	41.7515	43.4216	45.0916
518	.5664	.4014	.2365	.0715	.9065	.7416	.5766	.4117	.2467	.0817	.7518	.4219	.0919
521	.5666	.4017	.2367	.0718	.9068	.7418	.5769	.4119	.2470	.0820	.7521	.4222	.0923
524	.5669	.4019	.2370	.0720	.9071	.7421	.5772	.4122	.2473	.0823	.7524	.4225	.0926
527	.5671	.4022	.2372	.0723	.9073	.7424	.5774	.4125	.2475	.0826	.7527	.4228	.0929
417530	32.5673	33.4024	34.2375	35.0725	35.9076	36.7426	37.5777	38.4128	39.2478	40.0829	41.7530	43.4231	45.0932
533	.5676	.4026	.2377	.0728	.9078	.7429	.5780	.4130	.2481	.0832	.7533	.4234	.0936
536	.5678	.4029	.2380	.0730	.9081	.7432	.5782	.4133	.2484	.0835	.7536	.4237	.0939
539	.5680	.4031	.2382	.0733	.9084	.7434	.5785	.4136	.2487	.0837	.7539	.4241	.0942
542	.5683	.4034	.2384	.0735	.9086	.7437	.5788	.4139	.2489	.0840	.7542	.4244	.0945
417545	32.5685	33.4036	34.2387	35.0738	35.9089	36.7440	37.5791	38.4141	39.2492	40.0843	41.7545	43.4247	45.0949
548	.5687	.4038	.2389	.0740	.9091	.7442	.5793	.4144	.2495	.0846	.7548	.4250	.0952
551	.5690	.4041	.2392	.0743	.9094	.7445	.5796	.4147	.2498	.0849	.7551	.4253	.0955
554	.5692	.4043	.2394	.0745	.9096	.7448	.5799	.4150	.2501	.0852	.7554	.4256	.0958
557	.5694	.4046	.2397	.0748	.9099	.7450	.5801	.4152	.2504	.0855	.7557	.4259	.0962
417560	32.5697	33.4048	34.2399	35.0750	35.9102	36.7453	37.5804	38.4155	39.2506	40.0858	41.7560	43.4262	45.0965
563	.5699	.4050	.2402	.0753	.9104	.7455	.5807	.4158	.2509	.0860	.7563	.4266	.0968
566	.5701	.4053	.2404	.0755	.9107	.7458	.5809	.4161	.2512	.0863	.7566	.4269	.0971
569	.5704	.4055	.2407	.0758	.9109	.7461	.5812	.4163	.2515	.0866	.7569	.4272	.0975
572	.5706	.4058	.2409	.0760	.9112	.7463	.5815	.4166	.2518	.0869	.7572	.4275	.0978
417575	32.5709	33.4060	34.2412	35.0763	35.9115	36.7466	37.5818	38.4169	39.2521	40.0872	41.7575	43.4278	45.0981
578	.5711	.4062	.2414	.0766	.9117	.7469	.5820	.4172	.2523	.0875	.7578	.4281	.0984
581	.5713	.4065	.2416	.0768	.9120	.7471	.5823	.4175	.2526	.0878	.7581	.4284	.0987
584	.5716	.4067	.2419	.0771	.9122	.7474	.5826	.4177	.2529	.0881	.7584	.4287	.0991
587	.5718	.4070	.2421	.0773	.9125	.7477	.5828	.4180	.2532	.0884	.7587	.4290	.0994
417590	32.5720	33.4072	34.2424	35.0776	35.9127	36.7479	37.5831	38.4183	29.2535	40.0886	41.7590	43.4294	45.0997
593	.5723	.4074	.2426	.0778	.9130	.7482	.5834	.4186	.2537	.0889	.7593	.4297	.1000
596	.5725	.4077	.2429	.0781	.9133	.7484	.5836	.4188	.2540	.0892	.7596	.4300	.1004
599	.5727	.4079	.2431	.0783	.9135	.7487	.5839	.4191	.2543	.0895	.7599	.4303	.1007
602	.5730	.4082	.2434	.0786	.9138	.7490	.5842	.4194	.2546	.0898	.7602	.4306	.1010
417605	32.5732	33.4084	34.2436	35.0788	35.9140	36.7492	37.4845	38.4197	39.2549	40.0901	41.7605	43.4309	45.1013
608	.5734	.4086	.2439	.0791	.9143	.7495	.5847	.4199	.2552	.0904	.7608	.4312	.1017
611	.5737	.4089	.2441	.0793	.9145	.7498	.5850	.4202	.2554	.0907	.7611	.4315	.1020
614	.5739	.4091	.2443	.0796	.9148	.7500	.5853	.4205	.2557	.0909	.7614	.4319	.1023
617	.5741	.4094	.2446	.0798	.9151	.7503	.5855	.4208	.2560	.0912	.7617	.4322	.1026
417620	32.5744	33.4096	34.2448	35.0801	35.9153	36.7506	37.5858	38.4210	39.2563	40.0915	41.7620	43.4325	45.1030
623	.5746	.4098	.2451	.0803	.9156	.7508	.5861	.4213	.2566	.0918	.7623	.4328	.1033
626	.5748	.4101	.2453	.0806	.9158	.7511	.5863	.4216	.2568	.0921	.7626	.4331	.1036
629	.5751	.4103	.2456	.0808	.9161	.7514	.5866	.4219	.2571	.0924	.7629	.4334	.1039
632	.5753	.4106	.2458	.0811	.9164	.7516	.5869	.4221	.2574	.0927	.7632	.4337	.1043
417635	32.5755	33.4108	34.2461	35.0813	35.9166	36.7519	37.5872	38.4224	39.2577	40.0930	41.7635	43.4340	45.1046
638	.5758	.4110	.2463	.0816	.9169	.7521	.5874	.4227	.2580	.0932	.7638	.4344	.1049
641	.5760	.4113	.2466	.0818	.9171	.7524	.5877	.4230	.2583	.0935	.7641	.4347	.1052
644	.5762	.4115	.2468	.0821	.9174	.7527	.5880	.4232	.2585	.0938	.7644	.4350	.1056
647	.5765	.4118	.2471	.0823	.9176	.7529	.5882	.4235	.2588	.0941	.7647	.4353	.1059
417650	32.5767	33.4120	34.2473	35.0826	35.9179	36.7532	37.5885	38.4238	39.2591	40.0944	41.7650	43.4356	45.1062
653	.5769	.4122	.2475	.0829	.9182	.7535	.5888	.4241	.2594	.0947	.7653	.4359	.1065
656	.5772	.4125	.2478	.0831	.9184	.7537	.5890	.4244	.2597	.0950	.7656	.4362	.1068
659	.5774	.4127	.2480	.0834	.9187	.7540	.5893	.4246	.2599	.0953	.7659	.4365	.1072
662	.5776	.4130	.2483	.0836	.9189	.7543	.5896	.4249	.2602	.0956	.7662	.4368	.1075
417665	32.5779	33.4132	34.2485	35.0839	35.9192	36.7545	37.5899	38.4252	39.2605	40.0958	41.7665	43.4372	45.1078
668	.5781	.4134	.2488	.0841	.9194	.7548	.5901	.4255	.2608	.0961	.7668	.4375	.1081
671	.5783	.4137	.2490	.0844	.9197	.7550	.5904	.4257	.2611	.0964	.7671	.4378	.1085
674	.5786	.4139	.2493	.0846	.9200	.7553	.5907	.4260	.2614	.0967	.7674	.4381	.1088
677	.5788	.4142	.2495	.0849	.9202	.7556	.5909	.4263	.2616	.0970	.7677	.4384	.1091
417680	32.5790	33.4144	34.2498	35.0851	35.9205	36.7558	37.5912	38.4266	39.2619	40.0973	41.7680	43.4387	45.1094
683	.5793	.4146	.2500	.0854	.9207	.7561	.5915	.4268	.2622	.0976	.7683	.4390	.1098
686	.5795	.4149	.2503	.0856	.9210	.7564	.5917	.4271	.2625	.0979	.7686	.4393	.1101
689	.5797	.4151	.2505	.0859	.9213	.7566	.5920	.4274	.2628	.0981	.7689	.4397	.1104
692	.5800	.4154	.2507	.0861	.9215	.7569	.5923	.4277	.2630	.0984	.7692	.4400	.1107
417695	32.5802	33.4156	34.2510	35.0864	35.9218	36.7572	37.5926	38.4279	39.2633	40.0987	41.7695	43.4403	45.1111
698	.5804	.4158	.2512	.0866	.9220	.7574	.5928	.4282	.2636	.0990	.7698	.4406	.1114
701	.5807	.4161	.2515	.0869	.9223	.7577	.5931	.4285	.2639	.0993	.7701	.4409	.1117
704	.5809	.4163	.2517	.0871	.9225	.7580	.5934	.4288	.2642	.0996	.7704	.4412	.1120
707	.5811	.4166	.2520	.0874	.9228	.7582	.5936	.4290	.2645	.0999	.7707	.4415	.1124
417710	32.5814	33.4168	34.2522	35.0876	35.9231	36.7585	37.5939	38.4293	39.2647	40.1002	41.7710	43.4418	45.1127
713	.5816	.4170	.2525	.0879	.9233	.7587	.5942	.4296	.2650	.1004	.7713	.4422	.1130
716	.5818	.4173	.2527	.0881	.9236	.7590	.5944	.4299	.2653	.1007	.7716	.4425	.1133
719	.5821	.4175	.2530	.0884	.9238	.7593	.5947	.4301	.2656	.1010	.7719	.4428	.1137
722	.5823	.4178	.2532	.0886	.9241	.7595	.5950	.4304	.2659	.1013	.7722	.4431	.1140
417725	32.5826	33.4180	34.2535	35.0889	35.9244	36.7598	37.5953	38.4307	39.2662	40.1016	41.7725	43.4434	45.1143
728	.5828	.4182	.2537	.0892	.9246	.7601	.5955	.4310	.2664	.1019	.7728	.4437	.1146
731	.5830	.4185	.2539	.0894	.9249	.7603	.5958	.4313	.2667	.1022	.7731	.4440	.1149
734	.5833	.4187	.2542	.0897	.9251	.7606	.5961	.4315	.2670	.1025	.7734	.4443	.1153
737	.5835	.4190	.2544	.0899	.9254	.7609	.5963	.4318	.2673	.1028	.7737	.4446	.1156
417740	32.5837	33.4192	34.2547	35.0902	35.9256	36.7611	37.5966	38.4321	39.2676	40.1030	41.7740	43.4450	45.1159
743	.5840	.4194	.2549	.0904	.9259	.7614	.5969	.4324	.2678	.1033	.7743	.4453	.1162
746	.5842	.4197	.2552	.0907	.9262	.7616	.5971	.4326	.2681	.1036	.7746	.4456	.1166
749	.5844	.4199	.2554	.0909	.9264	.7619	.5974	.4329	.2684	.1039	.7749	.4459	.1169
752	.5847	.4202	.2557	.0912	.9267	.7622	.5977	.4332	.2687	.1042	.7752	.4462	.1172
417755	32.5849	33.4204	34.2559	35.0914	35.9269	36.7624	37.5980	38.4335	39.2690	40.1045	41.7755	43.4465	45.1175
758	.5851	.4206	.2562	.0917	.9272	.7627	.5982	.4337	.2693	.1048	.7758	.4468	.1179
761	.5854	.4209	.2564	.0919	.9274	.7630	.5985	.4340	.2695	.1051	.7761	.4471	.1182
764	.5856	.4211	.2566	.0922	.9277	.7632	.5988	.4343	.2698	.1053	.7764	.4475	.1185
767	.5858	.4214	.2569	.0924	.9280	.7635	.5990	.4346	.2701	.1056	.7767	.4478	.1188
417770	32.5861	33.4216	34.2571	35.0927	35.9282	36.7638	37.5993	38.4348	39.2704	40.1059	41.7770	43.4481	45.1192
773	.5863	.4218	.2574	.0929	.9285	.7640	.5996	.4351	.2707	.1062	.7773	.4484	.1195
776	.5865	.4221	.2576	.0932	.9287	.7643	.5998	.4354	.2709	.1065	.7776	.4487	.1198
779	.5868	.4223	.2579	.0934	.9290	.7646	.6001	.4357	.2712	.1068	.7779	.4490	.1201
782	.5870	.4226	.2581	.0937	.9293	.7648	.6004	.4359	.2715	.1071	.7782	.4493	.1205
417785	32.5872	33.4228	34.2584	35.0939	35.9295	36.7651	37.6007	38.4362	39.2718	40.1074	41.7785	43.4496	45.1208
788	.5875	.4230	.2586	.0942	.9298	.7653	.6009	.4365	.2721	.1076	.7788	.4500	.1211
791	.5877	.4233	.2589	.0944	.9300	.7656	.6012	.4368	.2724	.1079	.7791	.4503	.1214
794	.5879	.4235	.2591	.0947	.9303	.7659	.6015	.4370	.2726	.1082	.7794	.4506	.1218
797	.5882	.4238	.2594	.0949	.9305	.7661	.6017	.4373	.2729	.1085	.7797	.4509	.1221
417800	32.5884	33.4240	34.2596	35.0952	35.9308	36.7664	37.6020	38.4376	39.2732	40.1088	41.7800	43.4512	45.1224

MEGACYCLES PER SECOND

H A R M O N I C S

BASIC FREQ.	52	54	56	58	60	62	64	66	68	70	72	74	76
417800	21.7256	22.5612	23.3968	24.2324	25.0680	25.9036	26.7392	27.5748	28.4104	29.2460	30.0816	30.9172	31.7528
803	.7258	.5614	.3970	.2326	.0682	.9038	.7394	.5750	.4106	.2462	.0818	.9174	.7530
806	.7259	.5615	.3971	.2327	.0684	.9040	.7396	.5752	.4108	.2464	.0820	.9176	.7533
809	.7261	.5617	.3973	.2329	.0685	.9042	.7398	.5754	.4110	.2466	.0822	.9179	.7535
812	.7262	.5618	.3975	.2331	.0687	.9043	.7400	.5756	.4112	.2468	.0825	.9181	.7537
417815	21.7264	22.5620	23.3976	24.2333	25.0689	25.9045	26.7402	27.5758	28.4114	29.2471	30.0827	30.9183	31.7539
818	.7265	.5622	.3978	.2334	.0691	.9047	.7404	.5760	.4116	.2473	.0829	.9185	.7542
821	.7267	.5623	.3980	.2336	.0693	.9049	.7405	.5762	.4118	.2475	.0831	.9188	.7544
824	.7268	.5625	.3981	.2338	.0694	.9051	.7407	.5764	.4120	.2477	.0833	.9190	.7546
827	.7270	.5627	.3983	.2340	.0696	.9053	.7409	.5766	.4122	.2479	.0835	.9192	.7549
417830	21.7272	22.5628	23.3985	24.2341	25.0698	25.9055	26.7411	27.5768	28.4124	29.2481	30.0838	30.9194	31.7551
833	.7273	.5630	.3986	.2343	.0700	.9056	.7413	.5770	.4126	.2483	.0840	.9196	.7553
836	.7275	.5631	.3988	.2345	.0702	.9058	.7415	.5772	.4128	.2485	.0842	.9199	.7555
839	.7276	.5633	.3990	.2347	.0703	.9060	.7417	.5774	.4131	.2487	.0844	.9201	.7558
842	.7278	.5635	.3992	.2348	.0705	.9062	.7419	.5776	.4133	.2489	.0846	.9203	.7560
417845	21.7279	22.5636	23.3993	24.2350	25.0707	25.9064	26.7421	27.5778	28.4135	29.2492	30.0848	30.9205	31.7562
848	.7281	.5638	.3995	.2352	.0709	.9066	.7423	.5780	.4137	.2494	.0851	.9208	.7564
851	.7283	.5640	.3997	.2354	.0711	.9068	.7425	.5782	.4139	.2496	.0853	.9210	.7567
854	.7284	.5641	.3998	.2355	.0712	.9069	.7427	.5784	.4141	.2498	.0855	.9212	.7569
857	.7286	.5643	.4000	.2357	.0714	.9071	.7428	.5786	.4143	.2500	.0857	.9214	.7571
417860	21.7287	22.5644	23.4002	24.2359	25.0716	25.9073	26.7430	27.5788	28.4145	29.2502	30.0859	30.9216	31.7574
863	.7289	.5646	.4003	.2361	.0718	.9075	.7432	.5790	.4147	.2504	.0861	.9219	.7576
866	.7290	.5648	.4005	.2362	.0720	.9077	.7434	.5792	.4149	.2506	.0864	.9221	.7578
869	.7292	.5649	.4007	.2364	.0721	.9079	.7436	.5794	.4151	.2508	.0866	.9223	.7580
872	.7293	.5651	.4008	.2366	.0723	.9081	.7438	.5796	.4153	.2510	.0868	.9225	.7583
417875	21.7295	22.5653	23.4010	24.2368	25.0725	25.9083	26.7440	27.5798	28.4155	29.2513	30.0870	30.9228	31.7585
878	.7297	.5654	.4012	.2369	.0727	.9084	.7442	.5799	.4157	.2515	.0872	.9230	.7587
881	.7298	.5656	.4013	.2371	.0729	.9086	.7444	.5801	.4159	.2517	.0874	.9232	.7590
884	.7300	.5657	.4015	.2373	.0730	.9088	.7446	.5803	.4161	.2519	.0876	.9234	.7592
887	.7301	.5659	.4017	.2374	.0732	.9090	.7448	.5805	.4163	.2521	.0879	.9236	.7594
417890	21.7303	22.5661	23.4018	24.2376	25.0734	25.9092	26.7450	27.5807	28.4165	29.2523	30.0881	30.9239	31.7596
893	.7304	.5662	.4020	.2378	.0736	.9094	.7452	.5809	.4167	.2525	.0883	.9241	.7599
896	.7306	.5664	.4022	.2380	.0738	.9096	.7453	.5811	.4169	.2527	.0885	.9243	.7601
899	.7307	.5665	.4023	.2381	.0739	.9097	.7455	.5813	.4171	.2529	.0887	.9245	.7603
902	.7309	.5667	.4025	.2383	.0741	.9099	.7457	.5815	.4173	.2531	.0889	.9247	.7606
417905	21.7311	22.5669	23.4027	24.2385	25.0743	25.9101	26.7459	27.5817	28.4175	29.2534	30.0892	30.9250	31.7608
908	.7312	.5670	.4028	.2387	.0745	.9103	.7461	.5819	.4177	.2536	.0894	.9252	.7610
911	.7314	.5672	.4030	.2388	.0747	.9105	.7463	.5821	.4179	.2538	.0896	.9254	.7612
914	.7315	.5674	.4032	.2390	.0748	.9107	.7465	.5823	.4182	.2540	.0898	.9256	.7615
917	.7317	.5675	.4034	.2392	.0750	.9109	.7467	.5825	.4184	.2542	.0900	.9259	.7617
417920	21.7318	22.5677	23.4035	24.2394	25.0752	25.9110	26.7469	27.5827	28.4186	29.2544	30.0902	30.9261	31.7619
923	.7320	.5678	.4037	.2395	.0754	.9112	.7471	.5829	.4188	.2546	.0905	.9263	.7621
926	.7322	.5680	.4039	.2397	.0756	.9114	.7473	.5831	.4190	.2548	.0907	.9265	.7624
929	.7323	.5682	.4040	.2399	.0757	.9116	.7475	.5833	.4192	.2550	.0909	.9267	.7626
932	.7325	.5683	.4042	.2401	.0759	.9118	.7476	.5835	.4194	.2552	.0911	.9270	.7628
417935	21.7326	22.5685	23.4044	24.2402	25.0761	25.9120	26.7478	27.5837	28.4196	29.2555	30.0913	30.9272	31.7631
938	.7328	.5687	.4045	.2404	.0763	.9122	.7480	.5839	.4198	.2557	.0915	.9274	.7633
941	.7329	.5688	.4047	.2406	.0765	.9123	.7482	.5841	.4200	.2559	.0918	.9276	.7635
944	.7331	.5690	.4049	.2408	.0766	.9125	.7484	.5843	.4202	.2561	.0920	.9279	.7637
947	.7332	.5691	.4050	.2409	.0768	.9127	.7486	.5845	.4204	.2563	.0922	.9281	.7640
417950	21.7334	22.5693	23.4052	24.2411	25.0770	25.9129	26.7488	27.5847	28.4206	29.2565	30.0924	30.9283	31.7642
953	.7336	.5695	.4054	.2413	.0772	.9131	.7490	.5849	.4208	.2567	.0926	.9285	.7644
956	.7337	.5696	.4055	.2414	.0774	.9133	.7492	.5851	.4210	.2569	.0928	.9287	.7647
959	.7339	.5698	.4057	.2416	.0775	.9135	.7494	.5853	.4212	.2571	.0930	.9290	.7649
962	.7340	.5699	.4059	.2418	.0777	.9136	.7496	.5855	.4214	.2573	.0933	.9292	.7651
417965	21.7342	22.5701	23.4060	24.2420	25.0779	25.9138	26.7498	27.5857	28.4216	29.2576	30.0935	30.9294	31.7653
968	.7343	.5703	.4062	.2421	.0781	.9140	.7500	.5859	.4218	.2578	.0937	.9296	.7656
971	.7345	.5704	.4064	.2423	.0783	.9142	.7501	.5861	.4220	.2580	.0939	.9299	.7658
974	.7346	.5706	.4065	.2425	.0784	.9144	.7503	.5863	.4222	.2582	.0941	.9301	.7660
977	.7348	.5708	.4067	.2427	.0786	.9146	.7505	.5865	.4224	.2584	.0943	.9303	.7663
417980	21.7350	22.5709	23.4069	24.2428	25.0788	25.9148	26.7507	27.5867	28.4226	29.2586	30.0946	30.9305	31.7665
983	.7351	.5711	.4070	.2430	.0790	.9149	.7509	.5869	.4228	.2588	.0948	.9307	.7667
986	.7353	.5712	.4072	.2432	.0792	.9151	.7511	.5871	.4230	.2590	.0950	.9310	.7669
989	.7354	.5714	.4074	.2434	.0793	.9153	.7513	.5873	.4233	.2592	.0952	.9312	.7672
992	.7356	.5716	.4076	.2435	.0795	.9155	.7515	.5875	.4235	.2594	.0954	.9314	.7674
417995	21.7357	22.5717	23.4077	24.2437	25.0797	25.9157	26.7517	27.5877	28.4237	29.2597	30.0956	30.9316	31.7676
998	.7359	.5719	.4079	.2439	.0799	.9159	.7519	.5879	.4239	.2599	.0959	.9319	.7678
418001	.7361	.5721	.4081	.2441	.0801	.9161	.7521	.5881	.4241	.2601	.0961	.9321	.7681
004	.7362	.5722	.4082	.2442	.0802	.9162	.7523	.5883	.4243	.2603	.0963	.9323	.7683
007	.7364	.5724	.4084	.2444	.0804	.9164	.7524	.5885	.4245	.2605	.0965	.9325	.7685
418010	21.7365	22.5725	23.4086	24.2446	25.0806	25.9166	26.7526	27.5887	28.4247	29.2607	30.0967	30.9327	31.7688
013	.7367	.5727	.4087	.2448	.0808	.9168	.7528	.5889	.4249	.2609	.0969	.9330	.7690
016	.7368	.5729	.4089	.2449	.0810	.9170	.7530	.5891	.4251	.2611	.0972	.9332	.7692
019	.7370	.5730	.4091	.2451	.0811	.9172	.7532	.5893	.4253	.2613	.0974	.9334	.7694
022	.7371	.5732	.4092	.2453	.0813	.9174	.7534	.5895	.4255	.2615	.0976	.9336	.7697
418025	21.7373	22.5734	23.4094	24.2455	25.0815	25.9176	26.7536	27.5897	28.4257	29.2618	30.0978	30.9339	31.7699
028	.7375	.5735	.4096	.2456	.0817	.9177	.7538	.5898	.4259	.2620	.0980	.9341	.7701
031	.7376	.5737	.4097	.2458	.0819	.9179	.7540	.5900	.4261	.2622	.0982	.9343	.7704
034	.7378	.5738	.4099	.2460	.0820	.9181	.7542	.5902	.4263	.2624	.0984	.9345	.7706
037	.7379	.5740	.4101	.2461	.0822	.9183	.7544	.5904	.4265	.2626	.0987	.9347	.7708
418040	21.7381	22.5742	23.4102	24.2463	25.0824	25.9185	26.7546	27.5906	28.4267	29.2628	30.0989	30.9350	31.7710
043	.7382	.5743	.4104	.2465	.0826	.9187	.7548	.5908	.4269	.2630	.0991	.9352	.7713
046	.7384	.5745	.4106	.2467	.0828	.9189	.7549	.5910	.4271	.2632	.0993	.9354	.7715
049	.7385	.5746	.4107	.2468	.0829	.9190	.7551	.5912	.4273	.2634	.0995	.9356	.7717
052	.7387	.5748	.4109	.2470	.0831	.9192	.7553	.5914	.4275	.2636	.0997	.9358	.7720
418055	21.7389	22.5750	23.4111	24.2472	25.0833	25.9194	26.7555	27.5916	28.4277	29.2639	30.1000	30.9361	31.7722
058	.7390	.5751	.4112	.2474	.0835	.9196	.7557	.5918	.4279	.2641	.1002	.9363	.7724
061	.7392	.5753	.4114	.2475	.0837	.9198	.7559	.5920	.4281	.2643	.1004	.9365	.7726
064	.7393	.5755	.4116	.2477	.0838	.9200	.7561	.5922	.4284	.2645	.1006	.9367	.7729
067	.7395	.5756	.4118	.2479	.0840	.9202	.7563	.5924	.4286	.2647	.1008	.9370	.7731
418070	21.7396	22.5758	23.4119	24.2481	25.0842	25.9203	26.7565	27.5926	28.4288	29.2649	30.1010	30.9372	31.7733
073	.7398	.5759	.4121	.2482	.0844	.9205	.7567	.5928	.4290	.2651	.1013	.9374	.7735
076	.7400	.5761	.4123	.2484	.0846	.9207	.7569	.5930	.4292	.2653	.1015	.9376	.7738
079	.7401	.5763	.4124	.2486	.0847	.9209	.7571	.5932	.4294	.2655	.1017	.9378	.7740
082	.7403	.5764	.4126	.2488	.0849	.9211	.7572	.5934	.4296	.2657	.1019	.9381	.7742
418085	21.7404	22.5766	23.4128	24.2489	25.0851	25.9213	26.7574	27.5936	28.4298	29.2660	30.1021	30.9383	31.7745
088	.7406	.5768	.4129	.2491	.0853	.9215	.7576	.5938	.4300	.2662	.1023	.9385	.7747
091	.7407	.5769	.4131	.2493	.0855	.9216	.7578	.5940	.4302	.2664	.1026	.9387	.7749
094	.7409	.5771	.4133	.2495	.0856	.9218	.7580	.5942	.4304	.2666	.1028	.9390	.7751
097	.7410	.5772	.4134	.2496	.0858	.9220	.7582	.5944	.4306	.2668	.1030	.9392	.7754
418100	21.7412	22.5774	23.4136	24.2498	25.0860	25.9222	26.7584	27.5946	28.4308	29.2670	30.1032	30.9394	31.7756

MEGACYCLES PER SECOND

H A R M O N I C S

BASIC FREQ.	78	80	82	84	86	88	90	92	94	96	100	104	108
417800	32.5884	33.4240	34.2596	35.0952	35.9308	36.7664	37.6020	38.4376	39.2732	40.1088	41.7800	43.4512	45.1224
803	.5886	.4242	.2598	.0955	.9311	.7667	.6023	.4379	.2735	.1091	.7803	.4515	.1227
806	.5889	.4245	.2601	.0957	.9313	.7669	.6025	.4382	.2738	.1094	.7806	.4518	.1230
809	.5891	.4247	.2603	.0960	.9316	.7672	.6028	.4384	.2740	.1097	.7809	.4521	.1234
812	.5893	.4250	.2606	.0962	.9318	.7675	.6031	.4387	.2743	.1100	.7812	.4524	.1237
417815	32.5896	33.4252	34.2608	35.0965	35.9321	36.7677	37.6034	38.4390	39.2746	40.1102	41.7815	43.4528	45.1240
818	.5898	.4254	.2611	.0967	.9323	.7680	.6036	.4393	.2749	.1105	.7818	.4531	.1243
821	.5900	.4257	.2613	.0970	.9326	.7682	.6039	.4395	.2752	.1108	.7821	.4534	.1247
824	.5903	.4259	.2616	.0972	.9329	.7685	.6042	.4398	.2755	.1111	.7824	.4537	.1250
827	.5905	.4262	.2618	.0975	.9331	.7688	.6044	.4401	.2757	.1114	.7827	.4540	.1253
417830	32.5907	33.4264	34.2621	35.0977	35.9334	36.7690	37.6047	38.4404	39.2760	40.1117	41.7830	43.4543	45.1256
833	.5910	.4266	.2623	.0980	.9336	.7693	.6050	.4406	.2763	.1120	.7833	.4546	.1260
836	.5912	.4269	.2626	.0982	.9339	.7696	.6052	.4409	.2766	.1123	.7836	.4549	.1263
839	.5914	.4271	.2628	.0985	.9342	.7698	.6055	.4412	.2769	.1125	.7839	.4553	.1266
842	.5917	.5274	.2630	.0987	.9344	.7701	.6058	.4415	.2771	.1128	.7842	.4556	.1269
417845	32.5919	33.4276	34.2633	35.0990	35.9347	36.7704	37.6061	38.4417	39.2774	40.1131	41.7845	43.4559	45.1273
848	.5921	.4278	.2635	.0992	.9349	.7706	.6063	.4420	.2777	.1134	.7848	.4562	.1276
851	.5924	.4281	.2638	.0995	.9352	.7709	.6066	.4423	.2780	.1137	.7851	.4565	.1279
854	.5926	.4283	.2640	.0997	.9354	.7712	.6069	.4426	.2783	.1140	.7854	.4568	.1282
857	.5928	.4286	.2643	.1000	.9357	.7714	.6071	.4428	.2786	.1143	.7857	.4571	.1286
417860	32.5931	33.4288	34.2645	35.1002	35.9360	36.7717	37.6074	38.4431	39.2788	40.1146	41.7860	43.4574	45.1289
863	.5933	.4290	.2648	.1005	.9362	.7719	.6077	.4434	.2791	.1148	.7863	.4578	.1292
866	.5935	.4293	.2650	.1007	.9365	.7722	.6079	.4437	.2794	.1151	.7866	.4581	.1295
869	.5938	.4295	.2653	.1010	.9367	.7725	.6082	.4439	.2797	.1154	.7869	.4584	.1299
872	.5940	.4298	.2655	.1012	.9370	.7727	.6085	.4442	.2800	.1157	.7872	.4587	.1302
417875	32.5943	33.4300	34.2658	35.1015	35.9373	36.7730	37.6088	38.4445	39.2803	40.1160	41.7875	43.4590	45.1305
878	.5945	.4302	.2660	.1018	.9375	.7733	.6090	.4448	.2805	.1163	.7878	.4593	.1308
881	.5947	.4305	.2662	.1020	.9378	.7735	.6093	.4451	.2808	.1166	.7881	.4596	.1311
884	.5950	.4307	.2665	.1023	.9380	.7738	.6096	.4453	.2811	.1169	.7884	.4599	.1315
887	.5952	.4310	.2667	.1025	.9383	.7741	.6098	.4456	.2814	.1172	.7887	.4602	.1318
417890	32.5954	33.4312	34.2670	35.1028	35.9385	36.7743	37.6101	38.4459	39.2817	40.1174	41.7890	43.4606	45.1321
893	.5957	.4314	.2672	.1030	.9388	.7746	.6104	.4462	.2819	.1177	.7893	.4609	.1324
896	.5959	.4317	.2675	.1033	.9391	.7748	.6106	.4464	.2822	.1180	.7896	.4612	.1328
899	.5961	.4319	.2677	.1035	.9393	.7751	.6109	.4467	.2825	.1183	.7899	.4615	.1331
902	.5964	.4322	.2680	.1038	.9396	.7754	.6112	.4470	.2828	.1186	.7902	.4618	.1334
417905	32.5966	33.4324	34.2682	35.1040	35.9398	36.7756	37.6115	38.4473	39.2831	40.1189	41.7905	43.4621	45.1337
908	.5968	.4326	.2685	.1043	.9401	.7759	.6117	.4475	.2834	.1192	.7908	.4624	.1341
911	.5971	.4329	.2687	.1045	.9403	.7762	.6120	.4478	.2836	.1195	.7911	.4627	.1344
914	.5973	.4331	.2689	.1048	.9406	.7764	.6123	.4481	.2839	.1197	.7914	.4631	.1347
917	.5975	.4334	.2692	.1050	.9409	.7767	.6125	.4484	.2842	.1200	.7917	.4634	.1350
417920	32.5978	33.4336	34.2694	35.1053	35.9411	36.7770	37.6128	38.4486	39.2845	40.1203	41.7920	43.4637	45.1354
923	.5980	.4338	.2697	.1055	.9414	.7772	.6131	.4489	.2848	.1206	.7923	.4640	.1357
926	.5982	.4341	.2699	.1058	.9416	.7775	.6133	.4492	.2850	.1209	.7926	.4643	.1360
929	.5985	.4343	.2702	.1060	.9419	.7778	.6136	.4495	.2853	.1212	.7929	.4646	.1363
932	.5987	.4346	.2704	.1063	.9422	.7780	.6139	.4497	.2856	.1215	.7932	.4649	.1367
417935	32.5989	33.4348	34.2707	35.1065	35.9424	36.7783	37.6142	38.4500	39.2859	40.1218	41.7935	43.4652	45.1370
938	.5992	.4350	.2709	.1068	.9427	.7785	.6144	.4503	.2862	.1220	.7938	.4656	.1373
941	.5994	.4353	.2712	.1070	.9429	.7788	.6147	.4506	.2865	.1223	.7941	.4659	.1376
944	.5996	.4355	.2714	.1073	.9432	.7791	.6150	.4508	.2867	.1226	.7944	.4662	.1380
947	.5999	.4358	.2717	.1075	.9434	.7793	.6152	.4511	.2870	.1229	.7947	.4665	.1383
417950	32.6001	33.4360	34.2719	35.1078	35.9437	36.7796	37.6155	38.4514	39.2873	40.1232	41.7950	43.4668	45.1386
953	.6003	.4362	.2721	.1081	.9440	.7799	.6158	.4517	.2876	.1235	.7953	.4671	.1389
956	.6006	.4365	.2724	.1083	.9442	.7801	.6160	.4520	.2879	.1238	.7956	.4674	.1392
959	.6008	.4367	.2726	.1086	.9445	.7804	.6163	.4522	.2881	.1241	.7959	.4677	.1396
962	.6010	.4370	.2729	.1088	.9447	.7807	.6166	.4525	.2884	.1244	.7962	.4680	.1399
417965	32.6013	33.4372	34.2731	35.1091	35.9450	36.7809	37.6169	38.4528	39.2887	40.1246	41.7965	43.4684	45.1402
968	.6015	.4374	.2734	.1093	.9452	.7812	.6171	.4531	.3890	.1249	.7968	.4687	.1405
971	.6017	.4377	.2736	.1096	.9455	.7814	.6174	.4533	.2893	.1252	.7971	.4690	.1409
974	.6020	.4379	.2739	.1098	.9458	.7817	.6177	.4536	.2896	.1255	.7974	.4693	.1412
977	.6022	.4382	.2741	.1101	.9460	.7820	.6179	.4539	.2898	.1258	.7977	.4696	.1415
417980	32.6024	33.4384	34.2744	35.1103	35.9463	36.7822	37.6182	38.4542	39.2901	40.1261	41.7980	43.4699	45.1418
983	.6027	.4386	.2746	.1106	.9465	.7825	.6185	.4544	.2904	.1264	.7983	.4702	.1422
986	.6029	.4389	.2749	.1108	.9468	.7828	.6187	.4547	.2907	.1267	.7986	.4705	.1425
989	.6031	.4391	.2751	.1111	.9471	.7830	.6190	.4550	.2910	.1269	.7989	.4709	.1428
992	.6034	.4394	.2753	.1113	.9473	.7833	.6193	.4553	.2912	.1272	.7992	.4712	.1431
417995	32.6036	33.4396	34.2756	35.1116	35.9476	36.7836	37.6196	38.4555	39.2915	40.1275	41.7995	43.4715	45.1435
998	.6038	.4398	.2758	.1118	.9478	.7838	.6198	.4558	.2918	.1278	.7998	.4718	.1438
418001	.6041	.4401	.2761	.1121	.9481	.7841	.6201	.4561	.2921	.1281	.8001	.4721	.1441
004	.6043	.4403	.2763	.1123	.9483	.7844	.6204	.4564	.2924	.1284	.8004	.4724	.1444
007	.6045	.4406	.2766	.1126	.9486	.7846	.6206	.4566	.2927	.1287	.8007	.4727	.1448
418010	32.6048	33.4408	34.2768	35.1128	35.9489	36.7849	37.6209	38.4569	39.2929	40.1290	41.8010	43.4730	45.1451
013	.6050	.4410	.2771	.1131	.9491	.7851	.6212	.4572	.2932	.1292	.8013	.4734	.1454
016	.6052	.4413	.2773	.1133	.9494	.7854	.6214	.4575	.2935	.1295	.8016	.4737	.1457
019	.6055	.4415	.2776	.1136	.9496	.7857	.6217	.4577	.2938	.1298	.8019	.4740	.1461
022	.6057	.4418	.2778	.1138	.9499	.7859	.6220	.4580	.2941	.1301	.8022	.4743	.1464
418025	32.6060	33.4420	34.2781	35.1141	35.9502	36.7862	37.6223	38.4583	39.2944	40.1304	41.8025	43.4746	45.1467
028	.6062	.4422	.2783	.1144	.9504	.7865	.6225	.4586	.2946	.1307	.8028	.4749	.1470
031	.6064	.4425	.2785	.1146	.9507	.7867	.6228	.4589	.2949	.1310	.8031	.4752	.1473
034	.6067	.4427	.2788	.1149	.9509	.7870	.6231	.4591	.2952	.1313	.8034	.4755	.1477
037	.6069	.4430	.2790	.1151	.9512	.7873	.6233	.4594	.2955	.1316	.8037	.4758	.1480
418040	32.6071	33.4432	34.2793	35.1154	35.9514	36.7875	37.6236	38.4597	39.2958	40.1318	41.8040	43.4762	45.1483
043	.6074	.4434	.2795	.1156	.9517	.7878	.6239	.4600	.2960	.1321	.8043	.4765	.1486
046	.6076	.4437	.2798	.1159	.9520	.7880	.6241	.4602	.2963	.1324	.8046	.4768	.1490
049	.6078	.4439	.2800	.1161	.9522	.7883	.6244	.4605	.2966	.1327	.8049	.4771	.1493
052	.6081	.4442	.2803	.1164	.9525	.7886	.6247	.4608	.2969	.1330	.8052	.4774	.1496
418055	32.6083	33.4444	34.2805	35.1166	35.9527	36.7888	37.6250	38.4611	39.2972	40.1333	41.8055	43.4777	45.1499
058	.6085	.4446	.2808	.1169	.9530	.7891	.6252	.4613	.2975	.1336	.8058	.4780	.1503
061	.6088	.4449	.2810	.1171	.9532	.7894	.6255	.4616	.2977	.1339	.8061	.4783	.1506
064	.6090	.4451	.2812	.1174	.9535	.7896	.6258	.4619	.2980	.1341	.8064	.4787	.1509
067	.6092	.4454	.2815	.1176	.9538	.7899	.6260	.4622	.2983	.1344	.8067	.4790	.1512
418070	32.6095	33.4456	34.2817	35.1179	35.9540	36.7902	37.6263	38.4624	39.2986	40.1347	41.8070	43.4793	45.1516
073	.6097	.4458	.2820	.1181	.9543	.7904	.6266	.4627	.2989	.1350	.8073	.4796	.1519
076	.6099	.4461	.2822	.1184	.9545	.7907	.6268	.4630	.2991	.1353	.8076	.4799	.1522
079	.6102	.4463	.2825	.1186	.9548	.7910	.6271	.4633	.2994	.1356	.8079	.4802	.1525
082	.6104	.4466	.2827	.1189	.9551	.7912	.6274	.4635	.2997	.1359	.8082	.4805	.1529
418085	32.6106	33.4468	34.2830	35.1191	35.9553	36.7915	37.6277	38.4638	39.3000	40.1362	41.8085	43.4808	45.1532
088	.6109	.4470	.2832	.1194	.9556	.7917	.6279	.4641	.3003	.1364	.8088	.4812	.1535
091	.6111	.4473	.2835	.1196	.9558	.7920	.6282	.4644	.3006	.1367	.8091	.4815	.1538
094	.6113	.4475	.2837	.1199	.9561	.7923	.6285	.4646	.3008	.1370	.8094	.4818	.1542
097	.6116	.4478	.2840	.1201	.9563	.7925	.6287	.4649	.3011	.1373	.8097	.4821	.1545
418100	32.6118	33.4480	34.2842	35.1204	35.9566	36.7928	37.6290	38.4652	39.3014	40.1376	41.8100	43.4824	45.1548

MEGACYCLES PER SECOND

HARMONICS

BASIC FREQ.	52	54	56	58	60	62	64	66	68	70	72	74	76
418100	21.7412	22.5774	23.4136	24.2498	25.0860	25.9222	26.7584	27.5946	28.4308	29.2670	30.1032	30.9394	31.7756
103	.7414	.5776	.4138	.2500	.0862	.9224	.7586	.5948	.4310	.2672	.1034	.9396	.7758
106	.7415	.5777	.4139	.2501	.0864	.9226	.7588	.5950	.4312	.2674	.1036	.9398	.7761
109	.7417	.5779	.4141	.2503	.0865	.9228	.7590	.5952	.4314	.2676	.1038	.9401	.7763
112	.7418	.5780	.4143	.2505	.0867	.9229	.7592	.5954	.4316	.2678	.1041	.9403	.7765
418115	21.7420	22.5782	23.4144	24.2507	25.0869	25.9231	26.7594	27.5956	28.4318	29.2681	30.1043	30.9405	31.7767
118	.7421	.5784	.4146	.2508	.0871	.9233	.7596	.5958	.4320	.2683	.1045	.9407	.7770
121	.7423	.5785	.4148	.2510	.0873	.9235	.7597	.5960	.4322	.2685	.1047	.9410	.7772
124	.7424	.5787	.4149	.2512	.0874	.9237	.7599	.5962	.4324	.2687	.1049	.9412	.7774
127	.7426	.5789	.4151	.2514	.0876	.9239	.7601	.5964	.4326	.2689	.1051	.9414	.7777
418130	21.7428	22.5790	23.4153	24.2515	25.0878	25.9241	26.7603	27.5966	28.4328	29.2691	30.1054	30.9416	31.7779
133	.7429	.5792	.4154	.2517	.0880	.9242	.7605	.5968	.4330	.2693	.1056	.9418	.7781
136	.7431	.5793	.4156	.2519	.0882	.9244	.7607	.5970	.4332	.2695	.1058	.9421	.7783
139	.7432	.5795	.4158	.2521	.0883	.9246	.7609	.5972	.4335	.2697	.1060	.9423	.7786
142	.7434	.5797	.4160	.2522	.0885	.9248	.7611	.5974	.4337	.2699	.1062	.9425	.7788
418145	21.7435	22.5798	23.4161	24.2524	25.0887	25.9250	26.7613	27.5976	28.4339	29.2702	30.1064	30.9427	31.7790
148	.7437	.5800	.4163	.2526	.0889	.9252	.7615	.5978	.4341	.2704	.1067	.9430	.7792
151	.7439	.5802	.4165	.2528	.0891	.9254	.7617	.5980	.4343	.2706	.1069	.9432	.7795
154	.7440	.5803	.4166	.2529	.0892	.9255	.7619	.5982	.4345	.2708	.1071	.9434	.7797
157	.7442	.5805	.4168	.2531	.0894	.9257	.7620	.5984	.4347	.2710	.1073	.9436	.7799
418160	21.7443	22.5806	23.4170	24.2533	25.0896	25.9259	26.7622	27.5986	28.4349	29.2712	30.1075	30.9438	31.7802
163	.7445	.5808	.4171	.2535	.0898	.9261	.7624	.5988	.4351	.2714	.1077	.9441	.7804
166	.7446	.5810	.4173	.2536	.0900	.9263	.7626	.5990	.4353	.2716	.1080	.9443	.7806
169	.7448	.5811	.4175	.2538	.0901	.9265	.7628	.5992	.4355	.2718	.1082	.9445	.7808
172	.7449	.5813	.4176	.2540	.0903	.9267	.7630	.5994	.4357	.2720	.1084	.9447	.7811
418175	21.7451	22.5815	23.4178	24.2542	25.0905	25.9269	26.7632	27.5996	28.4359	29.2723	30.1086	30.9450	31.7813
178	.7453	.5816	.4180	.2543	.0907	.9270	.7634	.5997	.4361	.2725	.1088	.9452	.7815
181	.7454	.5818	.4181	.2545	.0909	.9272	.7636	.5999	.4363	.2727	.1090	.9454	.7818
184	.7456	.5819	.4183	.2547	.0910	.9274	.7628	.6001	.4365	.2729	.1092	.9456	.7820
187	.7457	.5821	.4185	.2548	.0912	.9276	.7640	.6003	.4367	.2731	.1095	.9458	.7822
418190	21.7459	22.5823	23.4186	24.2550	25.0914	25.9278	26.7642	27.6005	28.4369	29.2733	30.1097	30.9461	31.7824
193	.7460	.5824	.4188	.2552	.0916	.9280	.7644	.6007	.4371	.2735	.1099	.9463	.7827
196	.7462	.5826	.4190	.2554	.0918	.9282	.7645	.6009	.4373	.2737	.1101	.9465	.7829
199	.7463	.5827	.4191	.2555	.0919	.9283	.7647	.6011	.4375	.2739	.1103	.9467	.7831
202	.7465	.5829	.4193	.2557	.0921	.9285	.7649	.6013	.4377	.2741	.1105	.9469	.7834
418205	21.7467	22.5831	23.4195	24.2559	25.0923	25.9287	26.7651	27.6015	28.4379	29.2744	30.1108	30.9472	31.7836
208	.7468	.5832	.4196	.2561	.0925	.9289	.7653	.6017	.4381	.2746	.1110	.9474	.7838
211	.7470	.5834	.4198	.2562	.0927	.9291	.7655	.6019	.4383	.2748	.1112	.9476	.7840
214	.7471	.5836	.4200	.2564	.0928	.9293	.7657	.6021	.4386	.2750	.1114	.9478	.7843
217	.7473	.5837	.4202	.2566	.0930	.9295	.7659	.6023	.4388	.2752	.1116	.9481	.7845
418220	21.7474	22.5839	23.4203	24.2568	25.0932	25.9296	26.7661	27.6025	28.4390	29.2754	30.1118	30.9483	31.7847
223	.7476	.5840	.4205	.2569	.0934	.9298	.7663	.6027	.4392	.2756	.1121	.9485	.7849
226	.7478	.5842	.4207	.2571	.0936	.9300	.7665	.6029	.4394	.2758	.1123	.9487	.7852
229	.7479	.5844	.4208	.2573	.0937	.9302	.7667	.6031	.4396	.2760	.1125	.9489	.7854
232	.7481	.5845	.4210	.2575	.0939	.9304	.7668	.6033	.4398	.2762	.1127	.9492	.7856
418235	21.7482	22.5847	23.4212	24.2576	25.0941	25.9306	26.7670	27.6035	28.4400	29.2765	30.1129	30.9494	31.7859
238	.7484	.5849	.4213	.2578	.0943	.9308	.7672	.6037	.4402	.2767	.1131	.9496	.7861
241	.7485	.5850	.4215	.2580	.0945	.9309	.7674	.6039	.4404	.2769	.1134	.9498	.7863
244	.7487	.5852	.4217	.2582	.0946	.9311	.7676	.6041	.4406	.2771	.1136	.9501	.7865
247	.7488	.5853	.4218	.2583	.0948	.9313	.7678	.6043	.4408	.2773	.1138	.9503	.7868
418250	21.7490	22.5855	23.4220	24.2585	25.0950	25.9315	26.7680	27.6045	28.4410	29.2775	30.1140	30.9505	31.7870
253	.7492	.5857	.4222	.2587	.0952	.9317	.7682	.6047	.4412	.2777	.1142	.9507	.7872
256	.7493	.5858	.4223	.2588	.0954	.9319	.7684	.6049	.4414	.2779	.1144	.9509	.7875
259	.7495	.5860	.4225	.2590	.0955	.9321	.7686	.6051	.4416	.2781	.1146	.9512	.7877
262	.7496	.5861	.4227	.2592	.0957	.9322	.7688	.6053	.4418	.2783	.1149	.9514	.7879
418265	21.7498	22.5863	23.4228	24.2594	25.0959	25.9324	26.7690	27.6055	28.4420	29.2786	30.1151	30.9516	31.7881
268	.7499	.5865	.4230	.2595	.0961	.9326	.7692	.6057	.4422	.2788	.1153	.9518	.7884
271	.7501	.5866	.4232	.2597	.0963	.9328	.7693	.6059	.4424	.2790	.1155	.9521	.7886
274	.7502	.5868	.4233	.2599	.0964	.9330	.7695	.6061	.4426	.2792	.1157	.9523	.7888
277	.7504	.5870	.4235	.2601	.0966	.9332	.7697	.6063	.4428	.2794	.1159	.9525	.7891
418280	21.7506	22.5871	23.4237	24.2602	25.0968	25.9334	26.7699	27.6065	28.4430	29.2796	30.1162	30.9527	31.7893
283	.7507	.5873	.4238	.2604	.0970	.9335	.7701	.6067	.4432	.2798	.1164	.9529	.7895
286	.7509	.5874	.4240	.2606	.0972	.9337	.7703	.6069	.4434	.2800	.1166	.9532	.7897
289	.7510	.5876	.4242	.2608	.0973	.9339	.7705	.6071	.4437	.2802	.1168	.9534	.7900
292	.7512	.5878	.4244	.2609	.0975	.9341	.7707	.6073	.4439	.2804	.1170	.9536	.7902
418295	21.7513	22.5879	23.4245	24.2611	25.0977	25.9343	26.7709	27.6075	28.4441	29.2807	30.1172	30.9538	31.7904
298	.7515	.5881	.4247	.2613	.0979	.9345	.7711	.6077	.4443	.2809	.1175	.9541	.7906
301	.7517	.5883	.4249	.2615	.0981	.9347	.7713	.6079	.4445	.2811	.1177	.9543	.7909
304	.7518	.5884	.4250	.2616	.0982	.9348	.7715	.6081	.4447	.2813	.1179	.9545	.7911
307	.7520	.5886	.4252	.2618	.0984	.9350	.7716	.6083	.4449	.2815	.1181	.9547	.7913
418310	21.7521	22.5887	23.4254	24.2620	25.0986	25.9352	26.7718	27.6085	28.4451	29.2817	30.1183	30.9549	31.7916
313	.7523	.5889	.4255	.2622	.0988	.9354	.7720	.6087	.4453	.2819	.1185	.9552	.7918
316	.7524	.5891	.4257	.2623	.0990	.9356	.7722	.6089	.4455	.2821	.1188	.9554	.7920
319	.7526	.5892	.4259	.2625	.0991	.9358	.7724	.6091	.4457	.2823	.1190	.9556	.7922
322	.7527	.5894	.4260	.2627	.0993	.9360	.7726	.6093	.4459	.2825	.1192	.9558	.7925
418325	21.7529	22.5896	23.4262	24.2659	25.0995	25.9362	26.7728	27.6095	28.4461	29.2828	30.1194	30.9561	31.7927
328	.7531	.5897	.4264	.2630	.0997	.9363	.7730	.6096	.4463	.2830	.1196	.9563	.7929
331	.7532	.5899	.4265	.2632	.0999	.9365	.7732	.6098	.4465	.2832	.1198	.9565	.7932
334	.7534	.5900	.4267	.2634	.1000	.9367	.7734	.6100	.4467	.2834	.1200	.9567	.7934
337	.7535	.5902	.4269	.2635	.1002	.9369	.7736	.6102	.4469	.2836	.1203	.9569	.7936
418340	21.7537	22.5904	23.4270	24.2637	25.1004	25.9371	26.7738	27.6104	28.4471	29.2838	30.1205	30.9572	31.7938
343	.7538	.5905	.4272	.2639	.1006	.9373	.7740	.6106	.4473	.2840	.1207	.9574	.7941
346	.7540	.5907	.4274	.2641	.1008	.9375	.7741	.6108	.4475	.2842	.1209	.9576	.7943
349	.7541	.5908	.4275	.2642	.1009	.9376	.7743	.6110	.4477	.2844	.1211	.9578	.7945
352	.7543	.5910	.4277	.2644	.1011	.9378	.7745	.6112	.4479	.2846	.1213	.9580	.7948
418355	21.7545	22.5912	23.4279	24.2646	25.1013	25.9380	26.7747	27.6114	28.4481	29.2849	30.1216	30.9583	31.7950
358	.7546	.5913	.4280	.2648	.1015	.9382	.7749	.6116	.4483	.2851	.1218	.9585	.7952
361	.7548	.5915	.4282	.2649	.1017	.9384	.7751	.6118	.4485	.2853	.1220	.9587	.7954
364	.7549	.5917	.4284	.2651	.1018	.9386	.7753	.6120	.4488	.2855	.1222	.9589	.7957
367	.7551	.5918	.4286	.2653	.1020	.9388	.7755	.6122	.4490	.2857	.1224	.9592	.7959
418370	21.7552	22.5920	23.4287	24.2655	25.1022	25.9389	26.7757	27.6124	28.4492	29.2859	30.1226	30.9594	31.7961
373	.7554	.5921	.4289	.2656	.1024	.9391	.7759	.6126	.4494	.2861	.1229	.9596	.7963
376	.7556	.5923	.4291	.2658	.1026	.9393	.7761	.6128	.4496	.2863	.1231	.9598	.7966
379	.7557	.5925	.4292	.2660	.1027	.9395	.7763	.6130	.4498	.2865	.1233	.9600	.7968
382	.7559	.5926	.4294	.2662	.1029	.9397	.7764	.6132	.4500	.2867	.1235	.9603	.7970
418385	21.7560	22.5928	23.4296	24.2663	25.1031	25.9399	26.7766	27.6134	28.4502	29.2870	.1237	30.9605	31.7973
388	.7562	.5930	.4297	.2665	.1033	.9401	.7768	.6136	.4504	.2872	.1239	.9607	.7975
391	.7563	.5931	.4299	.2667	.1035	.9402	.7770	.6138	.4506	.2874	.1242	.9609	.7977
394	.7565	.5933	.4301	.2669	.1036	.9404	.7772	.6140	.4508	.2876	.1244	.9612	.7979
397	.7566	.5934	.4302	.2670	.1038	.9406	.7774	.6142	.4510	.2878	.1246	.9614	.7982
418400	21.7568	22.5936	23.4304	24.2672	25.1040	25.9408	26.7776	27.6144	28.4512	29.2880	30.1248	30.9616	31.7984

MEGACYCLES PER SECOND

BASIC FREQ.	HARMONICS 78	80	82	84	86	88	90	92	94	96	100	104	108
418100	32.6118	33.4480	34.2842	35.1204	35.9566	36.7928	37.6290	38.4652	39.3014	40.1376	41.8100	43.4824	45.1548
103	.6120	.4482	.2844	.1207	.9569	.7931	.6293	.4655	.3017	.1379	.8103	.4827	.1551
106	.6123	.4485	.2847	.1209	.9571	.7933	.6295	.4658	.3020	.1382	.8106	.4830	.1554
109	.6125	.4487	.2849	.1212	.9574	.7936	.6298	.4660	.3022	.1385	.8109	.4833	.1558
112	.6127	.4490	.2852	.1214	.9576	.7939	.6301	.4663	.3025	.1388	.8112	.4836	.1561
418115	32.6130	33.4492	34.2854	35.1217	35.9579	36.7941	37.6304	38.4666	39.3028	40.1390	41.8115	43.4840	45.1564
118	.6132	.4494	.2857	.1219	.9581	.7944	.6306	.4669	.3031	.1393	.8118	.4843	.1567
121	.6134	.4497	.2859	.1222	.9584	.7946	.6309	.4671	.3034	.1396	.8121	.4846	.1571
124	.6137	.4499	.2862	.1224	.9587	.7949	.6312	.4674	.3037	.1399	.8124	.4849	.1574
127	.6139	.4502	.2864	.1227	.9589	.7952	.6314	.4677	.3039	.1402	.8127	.4852	.1577
418130	32.6141	33.4504	34.2867	35.1229	35.9592	36.7954	37.6317	38.4680	39.3042	40.1405	41.8130	43.4855	45.1580
133	.6144	.4506	.2869	.1232	.9594	.7957	.6320	.4682	.3045	.1408	.8133	.4858	.1584
136	.6146	.4509	.2872	.1234	.9597	.7960	.6322	.4685	.3048	.1411	.8136	.4861	.1587
139	.6148	.4511	.2874	.1237	.9600	.7962	.6325	.4688	.3051	.1413	.8139	.4865	.1590
142	.6151	.4514	.2876	.1239	.9602	.7965	.6328	.4691	.3053	.1416	.8142	.4868	.1593
418145	32.6153	33.4516	34.2879	35.1242	35.9605	36.7968	37.6331	38.4693	39.3056	40.1419	41.8145	43.4871	45.1597
148	.6155	.4518	.2881	.1244	.9607	.7970	.6333	.4696	.3059	.1422	.8148	.4874	.1600
151	.6158	.4521	.2884	.1247	.9610	.7973	.6336	.4699	.3062	.1425	.8151	.4877	.1603
154	.6160	.4523	.2886	.1249	.9612	.7976	.6339	.4702	.3065	.1428	.8154	.4880	.1606
157	.6162	.4526	.2889	.1252	.9615	.7978	.6341	.4704	.3068	.1431	.8157	.4883	.1610
418160	32.6165	33.4528	34.2891	35.1254	35.9618	36.7981	37.6344	38.4707	39.3070	40.1434	41.8160	43.4886	45.1613
163	.6167	.4530	.2894	.1257	.9620	.7983	.6347	.4710	.3073	.1436	.8163	.4890	.1616
166	.6169	.4533	.2896	.1259	.9623	.7986	.6349	.4713	.3076	.1439	.8166	.4893	.1619
169	.6172	.4535	.2899	.1262	.9625	.7989	.6352	.4715	.3079	.1442	.8169	.4896	.1623
172	.6174	.4538	.2901	.1264	.9628	.7991	.6355	.4718	.3082	.1445	.8172	.4899	.1626
418175	32.6177	33.4540	34.2904	35.1267	35.9631	36.7994	37.6358	38.4721	39.3085	40.1448	41.8175	43.4902	45.1629
178	.6179	.4542	.2906	.1270	.9633	.7997	.6360	.4724	.3087	.1451	.8178	.4905	.1632
181	.6181	.4545	.2908	.1272	.9636	.7999	.6363	.4727	.3090	.1454	.8181	.4908	.1635
184	.6184	.4547	.2911	.1275	.9638	.8002	.6366	.4729	.3093	.1457	.8184	.4911	.1639
187	.6186	.4550	.2913	.1277	.9641	.8005	.6368	.4732	.3096	.1460	.8187	.4914	.1642
418190	32.6188	33.4552	34.2916	35.1280	35.9643	36.8007	37.6371	18.4735	39.3099	40.1462	41.8190	43.4918	45.1645
193	.6191	.4554	.2918	.1282	.9646	.8010	.6374	.4738	.3101	.1465	.8193	.4921	.1648
196	.6193	.4557	.2921	.1285	.9649	.8012	.6376	.4740	.3104	.1468	.8196	.4924	.1652
199	.6195	.4559	.2923	.1287	.9651	.8015	.6379	.4743	.3107	.1471	.8199	.4927	.1655
202	.6198	.4562	.2926	.1290	.9654	.8018	.6382	.4746	.3110	.1474	.8202	.4930	.1658
418205	32.6200	33.4564	35.2928	35.1292	35.9656	36.8020	37.6385	38.4749	39.3113	40.1477	41.8205	43.4933	45.1661
208	.6202	.4566	.2931	.1295	.9659	.8023	.6387	.4751	.3116	.1480	.8208	.4936	.1665
211	.6205	.4569	.2933	.1297	.9661	.8026	.6390	.4754	.3118	.1483	.8211	.4939	.1668
214	.6207	.4571	.2935	.1300	.9664	.8028	.6393	.4757	.3121	.1485	.8214	.4943	.1671
217	.6209	.4574	.2938	.1302	.9667	.8031	.6395	.4760	.3124	.1488	.8217	.4946	.1674
418220	32.6212	33.4576	34.2940	35.1305	35.9669	36.8034	37.6398	38.4762	39.3127	40.1491	41.8220	43.4949	45.1678
223	.6214	.4578	.2943	.1307	.9672	.8036	.6401	.4765	.3130	.1494	.8223	.4952	.1681
226	.6216	.4581	.2945	.1310	.9674	.8039	.6403	.4768	.3132	.1497	.8226	.4955	.1684
229	.6219	.4583	.2948	.1312	.9677	.8042	.6406	.4771	.3135	.1500	.8229	.4958	.1687
232	.6221	.4586	.2950	.1315	.9680	.8044	.6409	.4773	.3138	.1503	.8232	.4961	.1691
418235	32.6223	33.4588	34.2953	35.1317	35.9682	36.8047	37.6412	38.4776	39.3141	40.1506	41.8235	43.4964	45.1694
238	.6226	.4590	.2955	.1320	.9685	.8049	.6414	.4779	.3144	.1508	.8238	.4968	.1697
241	.6228	.4593	.2958	.1322	.9687	.8052	.6417	.4782	.3147	.1511	.8241	.4971	.1700
244	.6230	.4595	.2960	.1325	.9690	.8055	.6420	.4784	.3149	.1514	.8244	.4974	.1704
247	.6233	.4598	.2963	.1327	.9692	.8057	.6422	.4787	.3152	.1517	.8247	.4977	.1707
418250	32.6235	33.4600	34.2965	35.1330	35.9695	36.8060	37.6425	38.4790	39.3155	40.1520	41.8250	43.4980	45.1710
253	.6237	.4602	.2967	.1333	.9698	.8063	.6428	.4793	.3158	.1523	.8253	.4983	.1713
256	.6240	.4605	.2970	.1335	.9700	.8065	.6430	.4796	.3161	.1526	.8256	.4986	.1716
259	.6242	.4607	.2972	.1338	.9703	.8068	.6433	.4798	.3163	.1529	.8259	.4989	.1720
262	.6244	.4610	.2975	.1340	.9705	.8071	.6436	.4801	.3166	.1532	.8262	.4992	.1723
418265	32.6247	33.4612	34.2977	35.1343	35.9708	36.8073	37.6439	38.4804	39.3169	40.1534	41.8265	43.4996	45.1726
268	.6249	.4614	.2980	.1345	.9710	.8076	.6441	.4807	.3172	.1537	.8268	.4999	.1729
271	.6251	.4617	.2982	.1348	.9713	.8078	.6444	.4809	.3175	.1540	.8271	.5002	.1733
274	.6254	.4619	.2985	.1350	.9716	.8081	.6447	.4812	.3178	.1543	.8274	.5005	.1736
277	.6256	.4622	.2987	.1353	.9718	.8084	.6449	.4815	.3180	.1546	.8277	.5008	.1739
418280	32.6258	33.4624	34.2990	35.1355	35.9721	36.8086	37.6452	38.4818	39.3183	40.1549	41.8280	43.5011	45.1742
283	.6261	.4626	.2992	.1358	.9723	.8089	.6455	.4820	.3186	.1552	.8283	.5014	.1746
286	.6263	.4629	.2995	.1360	.9726	.8092	.6457	.4823	.3189	.1555	.8286	.5017	.1749
289	.6265	.4631	.2997	.1363	.9729	.8094	.6460	.4826	.3192	.1557	.8289	.5021	.1752
292	.6268	.4634	.2999	.1365	.9731	.8097	.6463	.4829	.3194	.1560	.8292	.5024	.1755
418295	32.6270	33.4636	34.3002	35.1368	35.9734	36.8100	37.6466	38.4831	39.3197	40.1563	41.8295	43.5027	45.1759
298	.6272	.4638	.3004	.1370	.9736	.8102	.6468	.4834	.3200	.1566	.8298	.5030	.1762
301	.6275	.4641	.3007	.1373	.9739	.8105	.6471	.4837	.3203	.1569	.8301	.5033	.1765
304	.6277	.4643	.3009	.1375	.9741	.8108	.6474	.4840	.3206	.1572	.8304	.5036	.1768
307	.6279	.4646	.3012	.1378	.9744	.8110	.6476	.4842	.3209	.1575	.8307	.5039	.1772
418310	32.6282	33.4648	34.3014	35.1380	35.9747	36.8113	37.6479	38.4845	39.3211	40.1578	41.8310	43.5042	45.1775
313	.6284	.4650	.3017	.1383	.9749	.8115	.6482	.4848	.3214	.1580	.8313	.5046	.1778
316	.6286	.4653	.3019	.1385	.9752	.8118	.6484	.4851	.3217	.1583	.8316	.5049	.1781
319	.6289	.4655	.3022	.1388	.9754	.8121	.6487	.4853	.3220	.1586	.8319	.5052	.1785
322	.6291	.4658	.3024	.1390	.9757	.8123	.6490	.4856	.3223	.1589	.8322	.5055	.1788
418325	32.6294	33.4660	34.3027	35.1393	35.9760	36.8126	37.6493	38.4859	39.3226	40.1592	41.8325	43.5058	45.1791
328	.6296	.4662	.3029	.1396	.9762	.8129	.6495	.4862	.3228	.1595	.8328	.5061	.1794
331	.6298	.4665	.3031	.1398	.9765	.8131	.6498	.4865	.3231	.1598	.8331	.5064	.1797
334	.6301	.4667	.3034	.1401	.9767	.8134	.6501	.4867	.3234	.1601	.8334	.5067	.1801
337	.6303	.4670	.3036	.1403	.9770	.8137	.6503	.4870	.3237	.1604	.8337	.5070	.1804
418340	32.6305	33.4672	34.3039	35.1406	35.9772	36.8139	37.6506	38.4873	39.3240	40.1606	41.8340	43.5074	45.1807
343	.6308	.4674	.3041	.1408	.9775	.8142	.6509	.4876	.3242	.1609	.8343	.5077	.1810
346	.6310	.4677	.3044	.1411	.9778	.8144	.6511	.4878	.3245	.1612	.8346	.5080	.1814
349	.6312	.4679	.3046	.1413	.9780	.8147	.6514	.4881	.3248	.1615	.8349	.5083	.1817
352	.6315	.4682	.3049	.1416	.9783	.8150	.6517	.4884	.3251	.1618	.8352	.5086	.1820
418355	32.6317	33.4684	34.3051	35.1418	35.9785	36.8152	37.6520	38.4887	39.3254	40.1621	41.8355	43.5089	45.1823
358	.6319	.4686	.3054	.1421	.9788	.8155	.6522	.4889	.3257	.1624	.8358	.5092	.1827
361	.6322	.4689	.3056	.1423	.9790	.8158	.6525	.4892	.3259	.1627	.8361	.5095	.1830
364	.6324	.4691	.3058	.1426	.9793	.8160	.6528	.4895	.3262	.1629	.8364	.5099	.1833
367	.6326	.4694	.3061	.1428	.9796	.8163	.6530	.4898	.3265	.1632	.8367	.5102	.1836
418370	32.6329	33.4696	34.3063	35.1431	35.9798	36.8166	37.6533	38.4900	39.3268	40.1635	41.8370	43.5105	45.1840
373	.6331	.4698	.3066	.1433	.9801	.8168	.6536	.4903	.3271	.1638	.8373	.5108	.1843
376	.6333	.4701	.3068	.1436	.9803	.8171	.6538	.4906	.3273	.1641	.8376	.5111	.1846
379	.6336	.4703	.3071	.1438	.9806	.8174	.6541	.4909	.3276	.1644	.8379	.5114	.1849
382	.6338	.4706	.3073	.1441	.9809	.8176	.6544	.4911	.3279	.1647	.8382	.5117	.1853
418385	32.6340	33.4708	34.3076	35.1443	35.9811	36.8179	37.6547	38.4914	39.3282	40.1650	41.8385	43.5120	45.1856
388	.6343	.4710	.3078	.1446	.9814	.8181	.6549	.4917	.3285	.1652	.8388	.5124	.1859
391	.6345	.4713	.3081	.1448	.9816	.8184	.6552	.4920	.3288	.1655	.8391	.5127	.1862
394	.6347	.4715	.3083	.1451	.9819	.8187	.6555	.4922	.3290	.1658	.8394	.5130	.1866
397	.6350	.4718	.3086	.1453	.9821	.8189	.6557	.4925	.3293	.1661	.8397	.5133	.1869
418400	32.6352	33.4720	34.3088	35.1456	35.9824	36.8192	37.6560	38.4928	39.3296	40.1664	41.8400	43.5136	45.1872

MEGACYCLES PER SECOND

HARMONICS

BASIC FREQ.	52	54	56	58	60	62	64	66	68	70	72	74	76
418400	21.7568	22.5936	23.4304	24.2672	25.1040	25.9408	26.7776	27.6144	28.4512	29.2880	30.1248	30.9616	31.7984
403	.7570	.5938	.4306	.2674	.1042	.9410	.7778	.6146	.4514	.2882	.1250	.9618	.7986
406	.7571	.5939	.4307	.2675	.1044	.9412	.7780	.6148	.4516	.2884	.1252	.9620	.7989
409	.7573	.5941	.4309	.2677	.1045	.9414	.7782	.6150	.4518	.2886	.1254	.9623	.7991
412	.7574	.5942	.4311	.2679	.1047	.9415	.7784	.6152	.4520	.2888	.1257	.9625	.7993
418415	21.7576	22.5944	23.4312	24.2681	25.1049	25.9417	26.7786	27.6154	28.4522	29.2891	30.1259	30.9627	31.7995
418	.7577	.5946	.4314	.2682	.1051	.9419	.7788	.6156	.4524	.2893	.1261	.9629	.7998
421	.7579	.5947	.4316	.2684	.1053	.9421	.7789	.6158	.4526	.2895	.1263	.9632	.8000
424	.7580	.5949	.4317	.2686	.1054	.9423	.7791	.6160	.4528	.2897	.1265	.9634	.8002
427	.7582	.5951	.4319	.2688	.1056	.9425	.7793	.6162	.4530	.2899	.1267	.9636	.8005
418430	21.7584	22.5952	23.4321	24.2689	25.1058	25.9427	26.7795	27.6164	28.4532	29.2901	30.1270	30.9638	31.8007
433	.7585	.5954	.4322	.2691	.1060	.9428	.7797	.6166	.4534	.2903	.1272	.9640	.8009
436	.7587	.5955	.4324	.2693	.1062	.9430	.7799	.6168	.4536	.2905	.1274	.9643	.8011
439	.7588	.5957	.4326	.2695	.1063	.9432	.7801	.6170	.4539	.2907	.1276	.9645	.8014
442	.7590	.5959	.4328	.2696	.1065	.9434	.7803	.6172	.4541	.2909	.1278	.9647	.8016
418445	21.7591	22.5960	23.4329	24.2698	25.1067	25.9436	26.7805	27.6174	28.4543	29.2912	30.1280	30.9649	31.8018
448	.7593	.5962	.4331	.2700	.1069	.9438	.7807	.6176	.4545	.2914	.1283	.9652	.8020
451	.7595	.5964	.4333	.2702	.1071	.9440	.7809	.6178	.4547	.2916	.1285	.9654	.8023
454	.7596	.5965	.4334	.2703	.1072	.9441	.7811	.6180	.4549	.2918	.1287	.9656	.8025
457	.7598	.5967	.4336	.2705	.1074	.9443	.7812	.6182	.4551	.2920	.1289	.9658	.8027
418460	21.7599	22.5968	23.4338	24.2707	25.1076	25.9445	26.7814	27.6184	28.4553	29.2922	30.1291	30.9660	31.8030
463	.7601	.5970	.4339	.2709	.1078	.9447	.7816	.6186	.4555	.2924	.1293	.9663	.8032
466	.7602	.5972	.4341	.2710	.1080	.9449	.7818	.6188	.4557	.2926	.1296	.9665	.8034
469	.7604	.5973	.4343	.2712	.1081	.9451	.7820	.6190	.4559	.2928	.1298	.9667	.8036
472	.7605	.5975	.4344	.2714	.1083	.9453	.7822	.6192	.4561	.2930	.1300	.9669	.8039
418475	21.7607	22.5977	23.4346	24.2716	25.1085	25.9455	26.7824	27.6194	28.4563	29.2933	30.1302	30.9672	31.8041
478	.7609	.5978	.4348	.2717	.1087	.9456	.7826	.6195	.4565	.2935	.1304	.9674	.8043
481	.7610	.5980	.4349	.2719	.1089	.9458	.7828	.6197	.4567	.2937	.1306	.9676	.8046
484	.7612	.5981	.4351	.2721	.1090	.9460	.7830	.6199	.4569	.2939	.1308	.0678	.8048
487	.7613	.5983	.4353	.2722	.1092	.9462	.7832	.6201	.4571	.2941	.1311	.9680	.8050
418490	21.7615	22.5985	23.4354	24.2724	25.1094	25.9464	26.7834	27.6203	28.4573	29.2943	30.1313	30.9683	31.8052
493	.7616	.5986	.4356	.2726	.1096	.9466	.7836	.6205	.4575	.2945	.1315	.9685	.8055
496	.7618	.5988	.4358	.2728	.1098	.9468	.7837	.6207	.4577	.2947	.1317	.9687	.8057
499	.7619	.5989	.4359	.2729	.1099	.9469	.7839	.6209	.4579	.2949	.1319	.9689	.8059
502	.7621	.5991	.4361	.2731	.1101	.9471	.7841	.6211	.4581	.2951	.1321	.9691	.8062
418505	21.7623	22.5993	23.4363	24.2733	25.1103	25.9473	26.7843	27.6213	28.4583	29.2954	30.1324	30.9694	31.8064
508	.7624	.5994	.4364	.2735	.1105	.9475	.7845	.6215	.4585	.2956	.1326	.9696	.8066
511	.7626	.5996	.4366	.2736	.1107	.9477	.7847	.6217	.4587	.2958	.1328	.9698	.8068
514	.7627	.5998	.4368	.2738	.1108	.9479	.7849	.6219	.4590	.2960	.1330	.9700	.8071
517	.7629	.5999	.4370	.2740	.1110	.9481	.7851	.6221	.4592	.2962	.1332	.9703	.8073
418520	21.7630	22.6001	23.4371	24.2742	25.1112	25.9482	26.7853	27.6223	28.4594	29.2964	30.1334	30.9705	31.8075
523	.7632	.6002	.4373	.2743	.1114	.9484	.7855	.6225	.4596	.2966	.1337	.9707	.8077
526	.7634	.6004	.4375	.2745	.1116	.9486	.7857	.6227	.4598	.2968	.1339	.9709	.8080
529	.7635	.6006	.4376	.2747	.1117	.9488	.7859	.6229	.4600	.2970	.1341	.9711	.8082
532	.7637	.6007	.4378	.2749	.1119	.9490	.7860	.6231	.4602	.2972	.1343	.9714	.8084
418535	21.7638	22.6009	23.4380	24.2750	25.1121	25.9492	26.7862	27.6233	28.4604	29.2975	30.1345	30.9716	31.8087
538	.7640	.6011	.4381	.2752	.1123	.9494	.7864	.6235	.4606	.2977	.1347	.9718	.8089
541	.7641	.6012	.4383	.2754	.1125	.9495	.7866	.6237	.4608	.2979	.1350	.9720	.8091
544	.7643	.6014	.4385	.2756	.1126	.9497	.7868	.6239	.4610	.2981	.1352	.9723	.8093
547	.7644	.6015	.4386	.2757	.1128	.9499	.7870	.6241	.4612	.2983	.1354	.9725	.8096
418550	21.7646	22.6017	23.4388	24.2759	25.1130	25.9501	26.7872	27.6243	28.4614	29.2985	30.1356	30.9727	31.8098
553	.7648	.6019	.4390	.2761	.1132	.9503	.7874	.6245	.4616	.2987	.1358	.9729	.8100
556	.7649	.6020	.4391	.2762	.1134	.9505	.7876	.6247	.4618	.2989	.1360	.9731	.8103
559	.7651	.6022	.4393	.2764	.1135	.9507	.7878	.6249	.4620	.2991	.1362	.9734	.8105
562	.7652	.6023	.4395	.2766	.1137	.9508	.7880	.6251	.4622	.2993	.1365	.9736	.8107
418565	21.7654	22.6025	23.4396	24.2768	25.1139	25.9510	26.7882	27.6253	28.4624	29.2996	30.1367	30.9738	31.8109
568	.7655	.6027	.4398	.2769	.1141	.9512	.7884	.6255	.4626	.2998	.1369	.9740	.8112
571	.7657	.6028	.4400	.2771	.1143	.9514	.7885	.6257	.4628	.3000	.1371	.9743	.8114
574	.7658	.6030	.4401	.2773	.1144	.9516	.7887	.6259	.4630	.3002	.1373	.9745	.8116
577	.7660	.6032	.4403	.2775	.1146	.9518	.7889	.6261	.4632	.3004	.1375	.9747	.8119
418580	21.7662	22.6033	23.4405	24.2776	25.1148	25.9520	26.7891	27.6263	28.4634	29.3006	30.1378	30.9749	31.8121
583	.7663	.6035	.4406	.2778	.1150	.9521	.7893	.6265	.4636	.3008	.1380	.9751	.8123
586	.7665	.6036	.4408	.2780	.1152	.9523	.7895	.6267	.4638	.3010	.1382	.9754	.8125
589	.7666	.6038	.4410	.2782	.1153	.9525	.7897	.6269	.4641	.3012	.1384	.9756	.8128
592	.7668	.6040	.4412	.2783	.1155	.9527	.7899	.6271	.4643	.3014	.1386	.9758	.8130
418595	21.7669	22.6041	23.4413	24.2785	25.1157	25.9529	26.7901	27.6273	28.4645	29.3017	30.1388	30.9760	31.8132
598	.7671	.6043	.4415	.2787	.1159	.9531	.7903	.6275	.4647	.3019	.1391	.9763	.8134
601	.7673	.6045	.4417	.2789	.1161	.9533	.7905	.6277	.4649	.3021	.1393	.9765	.8137
604	.7674	.6046	.4418	.2790	.1162	.9534	.7907	.6279	.4651	.3023	.1395	.9767	.8139
607	.7676	.6048	.4420	.2792	.1164	.9536	.7908	.6281	.4653	.3025	.1397	.9769	.8141
418610	21.7677	22.6049	23.4422	24.2794	25.1166	25.9538	26.7910	27.6283	28.4655	29.3027	30.1399	30.9771	31.8144
613	.7679	.6051	.4423	.2796	.1168	.9540	.7912	.6285	.4657	.3029	.1401	.9774	.8146
616	.7680	.6053	.4425	.2797	.1170	.9542	.7914	.6287	.4659	.3031	.1404	.9776	.8148
619	.7682	.6054	.4427	.2799	.1171	.9544	.7916	.6289	.4661	.3033	.1406	.9778	.8150
622	.7683	.6056	.4428	.2801	.1173	.9546	.7918	.6291	.4663	.3035	.1408	.9780	.8153
418625	21.7685	22.6058	23.4430	24.2803	25.1175	25.9548	26.7920	27.6293	28.4665	29.3038	30.1410	30.9783	31.8155
628	.7687	.6059	.4432	.2804	.1177	.9549	.7922	.6294	.4667	.3040	.1412	.9785	.8157
631	.7688	.6061	.4433	.2806	.1179	.9551	.7924	.6296	.4669	.3042	.1414	.9787	.8160
634	.7690	.6062	.4435	.2808	.1180	.9553	.7926	.6298	.4671	.3044	.1416	.9789	.8162
637	.7691	.6064	.4437	.2809	.1182	.9555	.7928	.6300	.4673	.3046	.1419	.9791	.8164
418640	21.7693	22.6066	23.4438	24.2811	25.1184	25.9557	26.7930	27.6302	28.4675	29.3048	30.1421	30.9794	31.8166
643	.7694	.6067	.4440	.2813	.1186	.9559	.7932	.6304	.4677	.3050	.1423	.9796	.8169
646	.7696	.6069	.4442	.2815	.1188	.9561	.7933	.6306	.4679	.3052	.1425	.9798	.8171
649	.7697	.6070	.4443	.2816	.1189	.9562	.7935	.6308	.4681	.3054	.1427	.9800	.8173
652	.7699	.6072	.4445	.2818	.1191	.9564	.7937	.6310	.4683	.3056	.1429	.9802	.8176
418655	21.7701	22.6074	23.4447	24.2820	25.1193	25.9566	26.7939	27.6312	28.4685	29.3059	30.1432	30.9805	31.8178
658	.7702	.6075	.4448	.2822	.1195	.9568	.7941	.6314	.4687	.3061	.1434	.9807	.8180
661	.7704	.6077	.4450	.2823	.1197	.9570	.7943	.6316	.4689	.3063	.1436	.9809	.8182
664	.7705	.6079	.4452	.2825	.1198	.9572	.7945	.6318	.4692	.3065	.1438	.9811	.8185
667	.7707	.6080	.4454	.2827	.1200	.9574	.7947	.6320	.4694	.3067	.1440	.9814	.8187
418670	21.7708	22.6082	23.4455	24.2829	25.1202	25.9575	26.7949	27.6322	28.4696	29.3069	30.1442	30.9816	31.8189
673	.7710	.6083	.4457	.2830	.1204	.9577	.7951	.6324	.4698	.3071	.1445	.9818	.8191
676	.7712	.6085	.4459	.2832	.1206	.9579	.7953	.6326	.4700	.3073	.1447	.9820	.8194
679	.7713	.6087	.4460	.2834	.1207	.9581	.7955	.6328	.4702	.3075	.1449	.9822	.8196
682	.7715	.6088	.4462	.2836	.1209	.9583	.7956	.6330	.4704	.3077	.1451	.9825	.8198
418685	21.7716	22.6090	23.4464	24.2837	25.1211	25.9585	26.7958	27.6332	28.4706	29.3080	30.1453	30.9827	31.8201
688	.7718	.6092	.4465	.2839	.1213	.9587	.7960	.6334	.4708	.3082	.1455	.9829	.8203
691	.7719	.6093	.4467	.2841	.1215	.9588	.7962	.6336	.4710	.3084	.1458	.9831	.8205
694	.7721	.6095	.4469	.2843	.1216	.9590	.7964	.6338	.4712	.3086	.1460	.9834	.8207
697	.7722	.6096	.4470	.2844	.1218	.9592	.7966	.6340	.4714	.3088	.1462	.9836	.8210
418700	21.7724	22.6098	23.4472	24.2846	25.1220	25.9594	26.7968	27.6342	28.4716	29.3090	30.1464	30.9838	31.8212

MEGACYCLES PER SECOND

HARMONICS

BASIC FREQ.	78	80	82	84	86	88	90	92	94	96	100	104	108
418400	32.6352	33.4720	34.3088	35.1456	35.9824	36.8192	37.6560	38.4928	39.3296	40.1664	41.8400	43.5136	45.1872
403	.6354	.4722	.3090	.1459	.9827	.8195	.6563	.4931	.3299	.1667	.8403	.5139	.1875
406	.6357	.4725	.3093	.1461	.9829	.8197	.6565	.4934	.3302	.1670	.8406	.5142	.1878
409	.6359	.4727	.3095	.1464	.9832	.8200	.6568	.4936	.3304	.1673	.8409	.5145	.1882
412	.6361	.4730	.3098	.1466	.9834	.8203	.6571	.4939	.3307	.1676	.8412	.5148	.1885
418415	32.6364	33.4732	34.3100	35.1469	35.9837	36.8205	37.6574	38.4942	39.3310	40.1678	41.8415	43.5152	45.1888
418	.6366	.4734	.3103	.1471	.9839	.8208	.6576	.4945	.3313	.1681	.8418	.5155	.1891
421	.6368	.4737	.3105	.1474	.9842	.8210	.6579	.4947	.3316	.1684	.8421	.5158	.1895
424	.6371	.4739	.3108	.1476	.9845	.8213	.6582	.4950	.3319	.1687	.8424	.5161	.1898
427	.6373	.4742	.3110	.1479	.9847	.8216	.6584	.4953	.3321	.1690	.8427	.5164	.1901
418430	32.6375	33.4744	34.3113	35.1481	35.9850	36.8218	37.6587	38.4956	39.3324	40.1693	41.8430	43.5167	45.1904
433	.6378	.4746	.3115	.1484	.9852	.8221	.6590	.4958	.3327	.1696	.8433	.5170	.1908
436	.6380	.4749	.3118	.1486	.9855	.8224	.6592	.4961	.3330	.1699	.8436	.5173	.1911
439	.6382	.4751	.3120	.1489	.9858	.8226	.6595	.4964	.3333	.1701	.8439	.5177	.1914
442	.6385	.4754	.3122	.1491	.9860	.8229	.6598	.4967	.3335	.1704	.8442	.5180	.1917
418445	32.6387	33.4756	34.3125	35.1494	35.9863	36.8232	37.6601	38.4969	39.3338	40.1707	41.8445	43.5183	45.1921
448	.6389	.4758	.3127	.1496	.9865	.8234	.6603	.4972	.3341	.1710	.8448	.5186	.1924
451	.6392	.4761	.3130	.1499	.9868	.8237	.6606	.4975	.3344	.1713	.8451	.5189	.1927
454	.6394	.4763	.3132	.1501	.9870	.8240	.6609	.4978	.3347	.1716	.8454	.5192	.1930
457	.6396	.4766	.3135	.1504	.9873	.8242	.6611	.4980	.3350	.1719	.8457	.5195	.1934
418460	32.6399	33.4768	34.3137	35.1506	35.9876	36.8245	37.6614	38.4983	39.3352	40.1722	41.8460	43.5198	45.1937
463	.6401	.4770	.3140	.1509	.9878	.8247	.6617	.4986	.3355	.1724	.8463	.5202	.1940
466	.6403	.4773	.3142	.1511	.9881	.8250	.6619	.4989	.3358	.1727	.8466	.5205	.1943
469	.6406	.4775	.3145	.1514	.9883	.8253	.6622	.4991	.3361	.1730	.8469	.5208	.1947
472	.6408	.4778	.3147	.1516	.9886	.8255	.6625	.4994	.3364	.1733	.8472	.5211	.1950
418475	32.6411	33.4780	34.3150	35.1519	35.9889	36.8258	37.6628	38.4997	39.3367	40.1736	41.8475	43.5214	45.1953
478	.6413	.4782	.3152	.1522	.9891	.8261	.6630	.5000	.3369	.1739	.8478	.5217	.1956
481	.6415	.4785	.3154	.1524	.9894	.8263	.6633	.5003	.3372	.1742	.8481	.5220	.1959
484	.6418	.4787	.3157	.1527	.9896	.8266	.6636	.5005	.3375	.1745	.8484	.5223	.1963
487	.6420	.4790	.3159	.1529	.9899	.8269	.6638	.5008	.3378	.1748	.8487	.5226	.1966
418490	32.6422	33.4792	34.3162	35.1532	35.9901	36.8271	37.6641	38.5011	39.3381	40.1750	41.8490	43.5230	45.1969
493	.6425	.4794	.3164	.1534	.9904	.8274	.6644	.5014	.3383	.1753	.8493	.5233	.1972
496	.6427	.4797	.3167	.1537	.9907	.8276	.6646	.5016	.3386	.1756	.8496	.5236	.1976
499	.6429	.4799	.3169	.1539	.9909	.8279	.6649	.5019	.3389	.1759	.8499	.5239	.1979
502	.6432	.4802	.3172	.1542	.9912	.8282	.6652	.5022	.3392	.1762	.8502	.5242	.1982
418505	32.6434	33.4804	34.3174	35.1544	35.9914	36.8284	27.6655	38.5025	39.3395	40.1765	41.8505	43.5245	45.1985
508	.6436	.4806	.3177	.1547	.9917	.8287	.6657	.5027	.3398	.1768	.8508	.5248	.1989
511	.6439	.4809	.3179	.1549	.9919	.8290	.6660	.5030	.3400	.1771	.8511	.5251	.1992
514	.6441	.4811	.3181	.1552	.9922	.8292	.6663	.5033	.3403	.1773	.8514	.5255	.1995
517	.6443	.4814	.3184	.1554	.9925	.8295	.6665	.5036	.3406	.1776	.8517	.5258	.1998
418520	32.6446	33.4816	34.3186	35.1557	35.9927	36.8298	37.6668	38.5038	39.3409	40.1779	41.8520	43.5261	45.2002
523	.6448	.4818	.3189	.1559	.9930	.8300	.6671	.5041	.3412	.1782	.8523	.5264	.2005
526	.6450	.4821	.3191	.1562	.9932	.8303	.6673	.5044	.3414	.1785	.8526	.5267	.2008
529	.6453	.4823	.3194	.1564	.9935	.8306	.6676	.5047	.3417	.1788	.8529	.5270	.2011
532	.6455	.4826	.3196	.1567	.9938	.8308	.6679	.5049	.3420	.1791	.8532	.5273	.2015
418535	32.6457	33.4828	34.3199	35.1569	35.9940	36.8311	37.6682	38.5052	39.3423	40.1794	41.8535	43.5276	45.2018
538	.6460	.4830	.3201	.1572	.9943	.8313	.6684	.5055	.3426	.1796	.8538	.5280	.2021
541	.6462	.4833	.3204	.1574	.9945	.8316	.6687	.5058	.3429	.1799	.8541	.5283	.2024
544	.6464	.4835	.3206	.1577	.9948	.8319	.6690	.5060	.3431	.1802	.8544	.5286	.2028
547	.6467	.4838	.3209	.1579	.9950	.8321	.6692	.5063	.3434	.1805	.8547	.5289	.2031
418550	32.6469	33.4840	34.3211	35.1582	35.9953	36.8324	37.6695	38.5066	39.3437	40.1808	41.8550	43.5292	45.2034
553	.6471	.4842	.3213	.1585	.9956	.8327	.6698	.5069	.3440	.1811	.8553	.5295	.2037
556	.6474	.4845	.3216	.1587	.9958	.8329	.6700	.5072	.3443	.1814	.8556	.5298	.2040
559	.6476	.4847	.3218	.1590	.9961	.8332	.6703	.5074	.3445	.1817	.8559	.5301	.2044
562	.6478	.4850	.3221	.1592	.9963	.8335	.6706	.5077	.3448	.1820	.8562	.5304	.2047
418565	32.6481	33.4852	34.3223	35.1595	35.9966	36.8337	37.6709	38.5080	39.3451	40.1822	41.8565	43.5308	45.2050
568	.6483	.4854	.3226	.1597	.9968	.8340	.6711	.5083	.3454	.1825	.8568	.5311	.2053
571	.6485	.4857	.3228	.1600	.9971	.8342	.6714	.5085	.3457	.1828	.8571	.5314	.2057
574	.6488	.4859	.3231	.1602	.9974	.8345	.6717	.5088	.3460	.1831	.8574	.5317	.2060
577	.6490	.4862	.3233	.1605	.9976	.8348	.6719	.5091	.3462	.1834	.8577	.5320	.2063
418580	32.6492	33.4864	34.3236	35.1607	35.9979	36.8350	37.6722	38.5094	39.3465	40.1837	41.8580	43.5323	45.2066
583	.6495	.4866	.3238	.1610	.9981	.8353	.6725	.5096	.3468	.1840	.8583	.5326	.2070
586	.6497	.4869	.3241	.1612	.9984	.8356	.6727	.5099	.3471	.1843	.8586	.5329	.2073
589	.6499	.4871	.3243	.1615	.9987	.8358	.6730	.5102	.3474	.1845	.8589	.5333	.2076
592	.6502	.4874	.3245	.1617	.9989	.8361	.6733	.5105	.3476	.1848	.8592	.5336	.2079
418595	32.6504	33.4876	34.3248	35.1620	35.9992	36.8364	37.6736	38.5107	39.3479	40.1851	41.8595	43.5339	45.2083
598	.6506	.4878	.3250	.1622	.9994	.8366	.6738	.5110	.3482	.1854	.8598	.5342	.2086
601	.6509	.4881	.3253	.1625	.9997	.8369	.6741	.5113	.3485	.1857	.8601	.5345	.2089
604	.6511	.4883	.3255	.1627	.9999	.8372	.6744	.5116	.3488	.1860	.8604	.5348	.2092
607	.6513	.4886	.3258	.1630	36.0002	.8374	.6746	.5118	.3491	.1863	.8607	.5351	.2096
418610	32.6516	33.4888	34.3260	35.1632	36.0005	36.8377	37.6749	38.5121	39.3493	40.1866	41.8610	43.5354	45.2099
613	.6518	.4890	.3263	.1635	.0007	.8379	.6752	.5124	.3496	.1868	.8613	.5358	.2102
616	.6520	.4893	.3265	.1637	.0010	.8382	.6754	.5127	.3499	.1871	.8616	.5361	.2105
619	.6523	.4895	.3268	.1640	.0012	.8385	.6757	.5129	.3502	.1874	.8619	.5364	.2109
622	.6525	.4898	.3270	.1642	.0015	.8387	.6760	.5132	.3505	.1877	.8622	.5367	.2112
418625	32.6528	33.4900	34.3273	35.1645	36.0018	36.8390	37.6763	38.5135	39.3508	40.1880	41.8625	43.5370	45.2115
628	.6530	.4902	.3275	.1648	.0020	.8393	.6765	.5138	.3510	.1883	.8628	.5373	.2118
631	.6532	.4905	.3277	.1650	.0023	.8395	.6768	.5141	.3513	.1886	.8631	.5376	.2121
634	.6535	.4907	.3280	.1653	.0025	.8398	.6771	.5143	.3516	.1889	.8634	.5379	.2125
637	.6537	.4910	.3282	.1655	.0028	.8401	.6773	.5146	.3519	.1892	.8637	.5382	.2128
418640	32.6539	33.4912	34.3285	35.1658	36.0030	36.8403	37.6776	38.5149	39.3522	40.1894	41.8640	43.5386	45.2131
643	.6542	.4914	.3287	.1660	.0033	.8406	.6779	.5152	.3524	.1897	.8643	.5389	.2134
646	.6544	.4917	.3290	.1663	.0036	.8408	.6781	.5154	.3527	.1900	.8646	.5392	.2138
649	.6546	.4919	.3292	.1665	.0038	.8411	.6784	.5157	.3530	.1903	.8649	.5395	.2141
652	.6549	.4922	.3295	.1668	.0041	.8414	.6787	.5160	.3533	.1906	.8652	.5398	.2144
418655	32.6551	33.4924	34.3297	35.1670	36.0043	36.8416	37.6790	38.5163	39.3536	40.1909	41.8655	43.5401	45.2147
658	.6553	.4926	.3300	.1673	.0046	.8419	.6792	.5165	.3539	.1912	.8658	.5404	.2151
661	.6556	.4929	.3302	.1675	.0048	.8422	.6795	.5168	.3541	.1915	.8661	.5407	.2154
664	.6558	.4931	.3304	.1678	.0051	.8424	.6798	.5171	.3544	.1917	.8664	.5411	.2157
667	.6560	.4934	.3307	.1680	.0054	.8427	.6800	.5174	.3547	.1920	.8667	.5414	.2160
418670	32.6563	33.4936	34.3309	35.1683	36.0056	36.8430	37.6803	38.5176	39.3550	40.1923	41.8670	43.5417	45.2164
673	.6565	.4938	.3312	.1685	.0059	.8432	.6806	.5179	.3553	.1926	.8673	.5420	.2167
676	.6567	.4941	.3314	.1688	.0061	.8435	.6808	.5182	.3555	.1929	.8676	.5423	.2170
679	.6570	.4943	.3317	.1690	.0064	.8438	.6811	.5185	.3558	.1932	.8679	.5426	.2173
682	.6572	.4946	.3319	.1693	.0067	.8440	.6814	.5187	.3561	.1935	.8682	.5429	.2177
418685	32.6574	33.4948	34.3322	35.1695	36.0069	36.8443	37.6817	38.5190	39.3564	40.1938	41.8685	43.5432	45.2180
688	.6577	.4950	.3324	.1698	.0072	.8445	.6819	.5193	.3567	.1940	.8688	.5436	.2183
691	.6579	.4953	.3327	.1700	.0074	.8448	.6822	.5196	.3570	.1943	.8691	.5439	.2186
694	.6581	.4955	.3329	.1703	.0077	.8451	.6825	.5198	.3572	.1946	.8694	.5442	.2190
697	.6584	.4958	.3332	.1705	.0079	.8453	.6827	.5201	.3575	.1949	.8697	.5445	.2193
418700	32.6586	33.4960	34.3334	35.1708	36.0082	36.8456	37.6830	38.5204	39.3578	40.1952	41.8700	43.5448	45.2196

MEGACYCLES PER SECOND

BASIC FREQ.	52	54	56	58	60	62	64	66	68	70	72	74	76
418700	21.7724	22.6098	23.4472	24.2846	25.1220	25.9594	26.7968	27.6342	28.4716	29.3090	30.1464	30.9838	31.8212
703	.7726	.6100	.4474	.2848	.1222	.9596	.7970	.6344	.4718	.3092	.1466	.9840	.8214
706	.7727	.6101	.4475	.2849	.1224	.9598	.7972	.6346	.4720	.3094	.1468	.9842	.8217
709	.7729	.6103	.4477	.2851	.1225	.9600	.7974	.6348	.4722	.3096	.1470	.9845	.8219
712	.7730	.6104	.4479	.2853	.1227	.9601	.7976	.6350	.4724	.3098	.1473	.9847	.8221
418715	21.7732	22.6106	23.4480	24.2855	25.1229	25.9603	26.7978	27.6352	28.4726	29.3101	30.1475	30.9849	31.8223
718	.7733	.6108	.4482	.2856	.1231	.9605	.7980	.6354	.4728	.3103	.1477	.9851	.8226
721	.7735	.6109	.4484	.2858	.1233	.9607	.7981	.6356	.4730	.3105	.1479	.9854	.8228
724	.7736	.6111	.4485	.2860	.1234	.9609	.7983	.6358	.4732	.3107	.1481	.9856	.8230
727	.7738	.6113	.4487	.2862	.1236	.9611	.7985	.6360	.4734	.3109	.1483	.9858	.8233
418730	21.7740	22.6114	23.4489	24.2863	25.1238	25.9613	26.7987	27.6362	28.4736	29.3111	30.1486	30.9860	31.8235
733	.7741	.6116	.4490	.2865	.1240	.9614	.7989	.6364	.4738	.3113	.1488	.9862	.8237
736	.7743	.6117	.4492	.2867	.1242	.9616	.7991	.6366	.4740	.3115	.1490	.9865	.8239
739	.7744	.6119	.4494	.2869	.1243	.9618	.7993	.6368	.4743	.3117	.1492	.9867	.8242
742	.7746	.6121	.4496	.2870	.1245	.9620	.7995	.6370	.4745	.3119	.1494	.9869	.8244
418745	21.7747	22.6122	23.4497	24.2872	25.1247	25.9622	26.7997	27.6372	28.4747	29.3122	30.1496	30.9871	31.8246
748	.7749	.6124	.4499	.2874	.1249	.9624	.7999	.6374	.4749	.3124	.1499	.9874	.8248
751	.7751	.6126	.4501	.2876	.1251	.9626	.8001	.6376	.4751	.3126	.1501	.9876	.8251
754	.7752	.6127	.4502	.2877	.1252	.9627	.8003	.6378	.4753	.3128	.1503	.9878	.8253
757	.7754	.6129	.4504	.2879	.1254	.9629	.8004	.6380	.4755	.3130	.1505	.9880	.8255
418760	21.7755	22.6130	23.4506	24.2881	25.1256	25.9631	26.8006	27.6382	28.4757	29.3132	30.1507	30.9882	31.8258
763	.7757	.6132	.4507	.2883	.1258	.9633	.8008	.6384	.4759	.3134	.1509	.9885	.8260
766	.7758	.6134	.4509	.2884	.1260	.9635	.8010	.6386	.4761	.3136	.1512	.9887	.8262
769	.7760	.6135	.4511	.2886	.1261	.9637	.8012	.6388	.4763	.3138	.1514	.9889	.8264
772	7761	.6137	.4512	.2888	.1263	.9639	.8014	.6390	.4765	.3140	.1516	.9891	.8267
418775	21.7763	22.6139	23.4514	24.2890	25.1265	25.9641	26.8016	27.6392	28.4767	29.3143	30.1518	30.9894	31.8269
778	.7765	.6140	.4516	.2891	.1267	.9642	.8018	.6393	.4769	.3145	.1520	.9896	.8271
781	.7766	.6142	.4517	.2893	.1269	.9644	.8020	.6395	.4771	.3147	.1522	.9898	.8274
784	.7768	.6143	.4519	.2895	.1270	.9646	.8022	.6397	.4773	.3149	.1524	.9900	.8276
787	.7769	.6145	.4521	.2896	.1272	.9648	.8024	.6399	.4775	.3151	.1527	.9902	.8278
418790	21.7771	22.6147	23.4522	24.2898	25.1274	25.9650	26.8026	27.6401	28.4777	29.3153	30.1529	30.9905	31.8280
793	.7772	.6148	.4524	.2900	.1276	.9652	.8028	.6403	.4779	.3155	.1531	.9907	.8283
796	.7774	.6150	.4526	.2902	.1278	.9654	.8029	.6405	.4781	.3157	.1533	.9909	.8285
799	.7775	.6151	.4527	.2903	.1279	.9655	.8031	.6407	.4783	.3159	.1535	.9911	.8287
802	.7777	.6153	.4529	.2905	.1281	.9657	.8033	.6409	.4785	.3161	.1537	.9913	.8290
418805	21.7779	22.6155	23.4531	24.2907	25.1283	25.9659	26.8035	27.6411	28.4787	29.3164	30.1540	30.9916	31.8292
808	.7780	.6156	.4532	.2909	.1285	.9661	.8037	.6413	.4789	.3166	.1542	.9918	.8294
811	.7782	.6158	.4534	.2910	.1287	.9663	.8039	.6415	.4791	.3168	.1544	.9920	.8296
814	.7783	.6160	.4536	.2912	.1288	.9665	.8041	.6417	.4794	.3170	.1546	.9922	.8299
817	.7785	.6161	.4538	.2914	.1290	.9667	.8043	.6419	.4796	.3172	.1548	.9925	.8301
418220	21.7786	22.6163	23.4539	24.2916	25.1292	25.9668	26.8045	27.6421	28.4798	29.3174	30.1550	30.9927	31.8303
823	.7788	.6164	.4541	.2917	.1294	.9670	.8047	.6423	.4800	.3176	.1553	.9929	.8305
826	.7790	.6166	.4543	.2919	.1296	.9672	.8049	.6425	.4802	.3178	.1555	.9931	.8308
829	.7791	.6168	.4544	.2921	.1297	.9674	.8051	.6427	.4804	.3180	.1557	.9933	.8310
832	.7793	.6169	.4546	.2923	.1299	.9676	.8052	.6429	.4806	.3182	.1559	.9936	.8312
418835	21.7794	22.6171	23.4548	24.2924	25.1301	25.9678	26.8054	27.6431	28.4808	29.3185	30.1561	30.9938	31.8315
838	.7796	.6173	.4549	.2926	.1303	.9680	.8056	.6433	.4810	.3187	.1563	.9940	.8317
841	.7797	.6174	.4551	.2928	.1305	.9681	.8058	.6435	.4812	.3189	.1566	.9942	.8319
844	.7799	.6176	.4553	.2930	.1306	.9683	.8060	.6437	.4814	.3191	.1568	.9945	.8321
847	.7800	.6177	.4554	.2931	.1308	.9685	.8062	.6439	.4816	.3193	.1570	.9947	.8324
418850	21.7802	22.6179	23.4556	24.2933	25.1310	25.9687	26.8064	27.6441	28.4818	29.3195	30.1572	30.9949	31.8326
853	.7804	.6181	.4558	.2935	.1312	.9689	.8066	.6443	.4820	.3197	.1574	.9951	.8328
856	.7805	.6182	.4559	.2936	.1314	.9691	.8068	.6445	.4822	.3199	.1576	.9953	.8331
859	.7807	.6184	.4561	.2938	.1315	.9693	.8070	.6447	.4824	.3201	.1578	.9956	.8333
862	.7808	.6185	.4563	.2940	.1317	.9694	.8072	.6449	.4826	.3203	.1581	.9958	.8335
418865	21.7810	22.6187	23.4564	24.2942	25.1319	25.9696	26.8074	27.6451	28.4828	29.3206	30.1583	30.9960	31.8337
868	.7811	.6189	.4566	.2943	.1321	.9698	.8076	.6453	.4830	.3208	.1585	.9962	.8340
871	.7813	.6190	.4568	.2945	.1323	.9700	.8077	.6455	.4832	.3210	.1587	.9965	.8342
874	.7814	.6192	.4569	.2947	.1324	.9702	.8079	.6457	.4834	.3212	.1589	.9967	.8344
877	.7816	.6194	.4571	.2949	.1326	.9704	.8081	.6459	.4836	.3214	.1591	.9969	.8347
418880	21.7818	22.6195	23.4573	24.2950	25.1328	25.9706	26.8083	27.6461	28.4838	29.3216	30.1594	30.9971	31.8349
883	.7819	.6197	.4574	.2952	.1330	.9707	.8085	.6463	.4840	.3218	.1596	.9973	.8351
886	.7821	.6198	.4576	.2954	.1332	.9709	.8087	.6465	.4842	.3220	.1598	.9976	.8353
889	.7822	.6200	.4578	.2956	.1333	.9711	.8089	.6467	.4845	.3222	.1600	.9978	.8356
892	.7824	.6202	.4580	.2957	.1335	.9713	.8091	.6469	.4847	.3224	.1602	.9980	.8358
418895	21.7825	22.6203	23.4581	24.2959	25.1337	25.9715	26.8093	27.6471	28.4849	29.3227	20.1604	30.9982	31.8360
898	.7827	.6205	.4583	.2961	.1339	.9717	.8095	.6473	.4851	.3229	.1607	.9985	.8362
901	.7829	.6207	.4585	.2963	.1341	.9719	.8097	.6475	.4853	.3231	.1609	.9987	.8365
904	.7830	.6208	.4586	.2964	.1342	.9720	.8099	.6477	.4855	.3233	.1611	.9989	.8367
907	.7832	.6210	.4588	.2966	.1344	.9722	.8100	.6479	.4857	.3235	.1613	.9991	.8369
418910	21.7833	22.6211	23.4590	24.2968	25.1346	25.9724	26.8102	27.6481	28.4859	29.3237	30.1615	30.9993	31.8372
913	.7835	.6213	.4591	.2970	.1348	.9726	.8104	.6483	.4861	.3239	.1617	.9996	.8374
916	.7836	.6215	.4593	.2971	.1350	.9728	.8106	.6485	.4863	.3241	.1620	.9998	.8376
919	.7838	.6216	.4595	.2973	.1351	.9730	.8108	.6487	.4865	.3243	.1622	31.0000	.8378
922	.7839	.6218	.4596	.2975	.1353	.9732	.8110	.6489	.4867	.3245	.1624	.0002	.8381
418925	21.7841	22.6220	23.4598	24.2977	25.1355	25.9734	26.8112	27.6491	28.4869	29.3248	30.1626	31.0005	31.8383
928	.7843	.6221	.4600	.2978	.1357	.9735	.8114	.6492	.4871	.3250	.1628	.0007	.8385
931	.7844	.6223	.4601	.2980	.1359	.9737	.8116	.6494	.4873	.3252	.1630	.0009	.8388
934	.7846	.6224	.4603	.2982	.1360	.9739	.8118	.6496	.4875	.3254	.1632	.0011	.8390
937	.7847	.6226	.4605	.2983	.1362	.9741	.8120	.6498	.4877	.3256	.1635	.0013	.8392
418940	21.7849	22.6228	23.4606	24.2985	25.1364	25.9743	26.8122	27.6500	28.4879	29.3258	30.1637	31.0016	31.8394
943	.7850	.6229	.4608	.2987	.1366	.9745	.8124	.6502	.4881	.3260	.1639	.0018	.8397
946	.7852	.6231	.4610	.2989	.1368	.9747	.8125	.6504	.4883	.3262	.1641	.0020	.8399
949	.7853	.6232	.4611	.2990	.1369	.9748	.8127	.6506	.4885	.3264	.1643	.0022	.8401
952	.7855	.6234	.4613	.2992	.1371	.9750	.8129	.6508	.4887	.3266	.1645	.0024	.8404
418955	21.7857	22.6236	23.4615	24.2994	25.1373	25.9752	26.8131	27.6510	28.4889	29.3269	30.1648	31.0027	31.8406
958	.7858	.6237	.4616	.2996	.1375	.9754	.8133	.6512	.4891	.3271	.1650	.0029	.8408
961	.7860	.6239	.4618	.2997	.1377	.9756	.8135	.6514	.4893	.3273	.1652	.0031	.8410
964	.7861	.6241	.4620	.2999	.1378	.9758	.8137	.6516	.4896	.3275	.1654	.0033	.8413
967	.7863	.6242	.4622	.3001	.1380	.9760	.8139	.6518	.4898	.3277	.1656	.0036	.8415
418970	21.7864	22.6244	23.4623	24.3003	25.1382	25.9761	26.8141	27.6520	28.4900	29.3279	30.1658	31.0038	31.8417
973	.7866	.6245	.4625	.3004	.1384	.9763	.8143	.6522	.4902	.3281	.1661	.0040	.8419
976	.7868	.6247	.4627	.3006	.1386	.9765	.8145	.6524	.4904	.3283	.1663	.0042	.8422
979	.7869	.6249	.4628	.3008	.1387	.9767	.8147	.6526	.4906	.3285	.1665	.0044	.8424
982	.7871	.6250	.4630	.3010	.1389	.9769	.8148	.6528	.4908	.3287	.1667	.0047	.8426
418985	21.7872	22.6252	23.4632	24.3011	25.1391	25.9771	26.8150	27.6530	28.4910	29.3290	30.1669	31.0049	31.8429
988	.7874	.6254	.4633	.3013	.1393	.9773	.8152	.6532	.4912	.3292	.1671	.0051	.8431
991	.7875	.6255	.4635	.3015	.1395	.9774	.8154	.6534	.4914	.3294	.1674	.0053	.8433
994	.7877	.6257	.4637	.3017	.1396	.9776	.8156	.6536	.4916	.3296	.1676	.0056	.8435
997	.7878	.6258	.4638	.3018	.1398	.9778	.8158	.6538	.4918	.3298	.1678	.0058	.8438
419000	21.7880	22.6260	23.4640	24.3020	25.1400	25.9780	26.8160	27.6540	28.4920	29.3300	30.1680	31.0060	31.8440

HARMONICS — MEGACYCLES PER SECOND

HARMONICS

BASIC FREQ.	78	80	82	84	86	88	90	92	94	96	100	104	108
418700	32.6586	33.4960	34.3334	35.1708	36.0082	36.8456	37.6830	38.5204	39.3578	40.1952	41.8700	43.5448	45.2196
703	.6588	.4962	.3336	.1711	.0085	.8459	.6833	.5207	.3581	.1955	.8703	.5451	.2199
706	.6591	.4965	.3339	.1713	.0087	.8461	.6835	.5210	.3584	.1958	.8706	.5454	.2202
709	.6593	.4967	.3341	.1716	.0090	.8464	.6838	.5212	.3586	.1961	.8709	.5457	.2206
712	.6595	.4970	.3344	.1718	.0092	.8467	.6841	.5215	.3589	.1964	.8512	.5460	.2209
418715	32.6598	33.4972	34.3346	35.1721	36.0095	36.8469	37.6844	38.5218	39.3592	40.1966	41.8715	43.5464	45.2212
718	.6600	.4974	.3349	.1723	.0097	.8472	.6846	.5221	.3595	.1969	.8718	.5467	.2215
721	.6602	.4977	.3351	.1726	.0100	.8474	.6849	.5223	.3598	.1972	.8721	.5470	.2219
724	.6605	.4979	.3354	.1728	.0103	.8477	.6852	.5226	.3601	.1975	.8724	.5473	.2222
727	.6607	.4982	.3356	.1731	.0105	.8480	.6854	.5229	.3603	.1978	.8727	.5476	.2225
418730	32.6609	33.4984	34.3359	35.1733	36.0108	36.8482	37.6857	38.5232	39.3606	40.1981	41.8730	43.5479	45.2228
733	.6612	.4986	.3361	.1736	.0110	.8485	.6860	.5234	.3609	.1984	.8733	.5482	.2232
736	.6614	.4989	.3364	.1738	.0113	.8488	.6862	.5237	.3612	.1987	.8736	.5485	.2235
739	.6616	.4991	.3366	.1741	.0116	.8490	.6865	.5240	.3615	.1989	.8739	.5489	.2238
742	.6619	.4994	.3368	.1743	.0118	.8493	.6868	.5243	.3617	.1992	.8742	.5492	.2241
418745	32.6621	33.4996	34.3371	35.1746	36.0121	36.8496	37.6871	38.5245	39.3620	40.1995	41.8745	43.5495	45.2245
748	.6623	.4998	.3373	.1748	.0123	.8498	.6873	.5248	.3623	.1998	.8748	.5498	.2248
751	.6626	.5001	.3376	.1751	.0126	.8501	.6876	.5251	.3626	.2001	.8751	.5501	.2251
754	.6628	.5003	.3378	.1753	.0128	.8504	.6879	.5254	.3629	.2004	.8754	.5504	.2254
757	.6630	.5006	.3381	.1756	.0131	.8506	.6881	.5256	.3632	.2007	.8757	.5507	.2258
418760	32.6633	33.5008	34.3383	35.1758	36.0134	36.8509	37.6884	38.5259	39.3634	40.2010	41.8760	43.5510	45.2261
763	.6635	.5010	.3386	.1761	.0136	.8511	.6887	.5262	.3637	.2012	.8763	.5514	.2264
766	.6637	.5013	.3388	.1763	.0139	.8514	.6889	.5265	.3640	.2015	.8766	.5517	.2267
769	.6640	.5015	.3391	.1766	.0141	.8517	.6892	.5267	.3643	.2018	.8769	.5520	.2271
772	.6642	.5018	.3393	.1768	.0144	.8519	.6895	.5270	.3646	.2021	.8772	.5523	.2274
418775	32.6645	33.5020	34.3396	35.1771	36.0147	36.8522	37.6898	38.5273	39.3649	40.2024	41.8775	43.5526	45.2277
778	.6647	.5022	.3398	.1774	.0149	.8525	.6900	.5276	.3651	.2027	.8778	.5529	.2280
781	.6649	.5025	.3400	.1776	.0152	.8527	.6903	.5279	.3654	.2030	.8781	.5532	.2283
784	.6652	.5027	.3403	.1779	.0154	.8530	.6906	.5281	.3657	.2033	.8784	.5535	.2287
787	.6654	.5030	.3405	.1781	.0157	.8533	.6908	.5284	.3660	.2036	.8787	.5538	.2290
418790	32.6656	33.5032	34.3408	35.1784	36.0159	36.8535	37.6911	38.5287	39.3663	40.2038	41.8790	43.5542	45.2293
793	.6659	.5034	.3410	.1786	.0162	.8538	.6914	.5290	.3665	.2041	.8793	.5545	.2296
796	.6661	.5037	.3413	.1789	.0165	.8540	.6916	.5292	.3668	.2044	.8796	.5548	.2300
799	.6663	.5039	.3415	.1791	.0167	.8543	.6919	.5295	.3671	.2047	.8799	.5551	.2303
802	.6666	.5042	.3418	.1794	.0170	.8546	.6922	.5298	.3674	.2050	.8802	.5554	.2306
418805	32.6668	33.5044	34.3420	35.1796	36.0172	36.8548	37.6925	38.5301	39.3677	40.2053	41.8805	43.5557	45.2309
808	.6670	.5046	.3423	.1799	.0175	.8551	.6927	.5303	.3680	.2056	.8808	.5560	.2313
811	.6673	.5049	.3425	.1801	.0177	.8554	.6930	.5306	.3682	.2059	.8811	.5563	.2316
814	.6675	.5051	.3427	.1804	.0180	.8556	.6933	.5309	.3685	.2061	.8814	.5567	.2319
817	.6677	.5054	.3430	.1806	.0183	.8559	.6935	.5312	.3688	.2064	.8817	.5570	.2322
418820	32.6680	33.5056	34.3432	35.1809	36.0185	36.8562	37.6938	38.5314	39.3691	40.2067	41.8820	43.5573	45.2326
823	.6682	.5058	.3435	.1811	.0188	.8564	.6941	.5317	.3694	.2070	.8823	.5576	.2329
826	.6684	.5061	.3437	.1814	.0190	.8567	.6943	.5320	.3696	.2073	.8826	.5579	.2332
829	.6687	.5063	.3440	.1816	.0193	.8570	.6946	.5323	.3699	.2076	.8829	.5582	.2335
832	.6689	.5066	.3442	.1819	.0196	.8572	.6949	.8325	.3702	.2079	.8832	.5585	.2339
418835	32.6691	33.5068	34.3445	35.1821	36.0198	36.8575	37.6952	38.5328	39.3705	40.2082	41.8835	43.5588	45.2342
838	.6694	.5070	.3447	.1824	.0201	.8577	.6954	.5331	.3708	.2084	.8838	.5592	.2345
841	.6696	.5073	.3450	.1826	.0203	.8580	.6957	.5334	.3711	.2087	.8841	.5595	.2348
844	.6698	.5075	.3452	.1829	.0206	.8583	.6960	.5336	.3713	.2090	.8844	.5598	.2352
847	.6701	.5078	.3455	.1831	.0208	.8585	.6962	.5339	.3716	.2093	.8847	.5601	.2355
418850	32.6703	33.5080	34.3457	35.1834	36.0211	36.8588	37.6965	38.5342	39.3719	40.2096	41.8850	43.5604	45.2358
853	.6705	.5082	.3459	.1837	.0214	.8591	.6968	.5345	.3722	.2099	.8853	.5607	.2361
856	.6708	.5085	.3462	.1839	.0216	.8593	.6970	.5348	.3725	.2102	.8856	.5610	.2364
859	.6710	.5087	.3464	.1842	.0219	.8596	.6973	.5350	.3727	.2105	.8859	.5613	.2368
862	.6712	.5090	.3467	.1844	.0221	.8599	.6976	.5353	.3730	.2108	.8862	.5616	.2371
418865	32.6715	33.5092	34.3469	35.1847	36.0224	36.8601	37.6979	38.5356	39.3733	40.2110	41.8865	43.5620	45.2374
868	.6717	.5094	.3472	.1849	.0226	.8604	.6981	.5359	.3736	.2113	.8868	.5623	.2377
871	.6719	.5097	.3474	.1852	.0229	.8606	.6984	.5361	.3739	.2116	.8871	.5626	.2381
874	.6722	.5099	.3477	.1854	.0232	.8609	.6987	.5364	.3742	.2119	.8874	.5629	.2384
877	.6724	.5102	.3479	.1857	.0234	.8612	.6989	.5367	.3744	.2122	.8877	.5632	.2387
418880	32.6726	33.5104	34.3482	35.1859	36.0237	36.8614	37.6992	38.5370	39.3747	40.2125	41.8880	43.5635	45.2390
883	.6729	.5106	.3484	.1862	.0239	.8617	.6995	.5372	.3750	.2128	.8883	.5638	.2394
886	.6731	.5109	.3487	.1864	.0242	.8620	.6997	.5375	.3753	.2131	.8886	.5641	.2397
889	.6733	.5111	.3489	.1867	.0245	.8622	.7000	.5378	.3756	.2133	.8889	.5645	.2400
892	.6736	.5114	.3491	.1869	.0247	.8625	.7003	.5381	.3758	.2136	.8892	.5648	.2403
418895	32.6738	33.5116	34.3494	35.1872	36.0250	36.8628	37.7006	38.5383	39.3761	40.2139	41.8895	43.5651	45.2407
898	.6740	.5118	.3496	.1874	.0252	.8630	.7008	.5386	.3764	.2142	.8898	.5654	.2410
901	.6743	.5121	.3499	.1877	.0255	.8633	.7011	.5389	.3767	.2145	.8901	.5657	.2413
904	.6745	.5123	.3501	.1879	.0257	.8636	.7014	.5392	.3770	.2148	.8904	.5660	.2416
907	.6747	.5126	.3504	.1882	.0260	.8638	.7016	.5394	.3773	.2151	.8907	.5663	.2420
418910	32.6750	33.5128	34.3506	35.1884	36.0263	36.8641	37.7019	38.5397	39.3775	40.2154	41.8910	43.5666	45.2423
913	.6752	.5130	.3509	.1887	.0265	.8643	.7022	.5400	.3778	.2156	.8913	.5670	.2426
916	.6754	.5133	.3511	.1889	.0268	.8646	.7024	.5403	.3781	.2159	.8916	.5673	.2429
919	.6757	.5135	.3514	.1892	.0270	.8649	.7027	.5405	.3784	.2162	.8919	.5676	.2433
922	.6759	.5138	.3516	.1894	.0273	.8651	.7030	.5408	.3787	.2165	.8922	.5679	.2436
418925	32.6762	33.5140	34.3519	35.1897	36.0276	36.8654	37.7033	38.5411	39.3790	40.2168	41.8925	43.5682	45.2439
928	.6764	.5142	.3521	.1900	.0278	.8657	.7035	.5414	.3792	.2171	.8928	.5685	.2442
931	.6766	.5145	.3523	.1902	.0281	.8659	.7038	.5417	.3795	.2174	.8931	.5688	.2445
934	.6769	.5147	.3526	.1905	.0283	.8662	.7041	.5419	.3798	.2177	.8934	.5691	.2449
937	.6771	.5150	.3528	.1907	.0286	.8665	.7043	.5422	.3801	.2180	.8937	.5694	.2452
418940	32.6773	33.5152	34.3531	35.1910	36.0288	36.8667	37.7046	38.5425	39.3804	40.2182	41.8940	43.5698	45.2455
943	.6776	.5154	.3533	.1912	.0291	.8670	.7049	.5428	.3806	.2185	.8943	.5701	.2458
946	.6778	.5157	.3536	.1915	.0294	.8672	.7051	.5430	.3809	.2188	.8946	.5704	.2462
949	.6780	.5159	.3538	.1917	.0296	.8675	.7054	.5433	.3812	.2191	.8949	.5707	.2465
952	.6783	.5162	.3541	.1920	.0299	.8678	.7057	.5436	.3815	.2194	.8952	.5710	.2468
418955	32.6785	33.5164	34.3543	35.1922	36.0301	36.8680	37.7060	38.5439	39.3818	40.2197	41.8955	43.5713	45.2471
958	.6787	.5166	.3546	.1925	.0304	.8683	.7062	.5441	.3821	.2200	.8958	.5716	.2475
961	.6790	.5169	.3548	.1927	.0306	.8686	.7065	.5444	.3823	.2203	.8961	.5719	.2478
964	.6792	.5171	.3550	.1930	.0309	.8688	.7068	.5447	.3826	.2205	.8964	.5723	.2481
967	.6794	.5174	.3553	.1932	.0312	.8691	.7070	.5450	.3829	.2208	.8967	.5726	.2484
418970	32.6797	33.5176	34.3555	35.1935	36.0314	36.8694	37.7073	38.5452	39.3832	40.2211	41.8970	43.5729	45.2488
973	.6799	.5178	.3558	.1937	.0317	.8696	.7076	.5455	.3835	.2214	.8973	.5732	.2491
976	.6801	.5181	.3560	.1940	.0319	.8699	.7078	.5458	.3837	.2217	.8976	.5735	.2494
979	.6804	.5183	.3563	.1942	.0322	.8702	.7081	.5461	.3840	.2220	.8979	.5738	.2497
982	.6806	.5186	.3565	.1945	.0325	.8704	.7084	.5463	.3843	.2223	.8982	.5741	.2501
418985	32.6808	33.5188	34.3568	35.1947	36.0327	36.8707	37.7087	38.5466	39.3846	40.2226	41.8985	43.5744	45.2504
988	.6811	.5190	.3570	.1950	.0330	.8709	.7089	.5469	.3849	.2228	.8988	.5748	.2507
991	.6813	.5193	.3573	.1952	.0332	.8712	.7092	.5472	.3852	.2231	.8991	.5751	.2510
994	.6815	.5195	.3575	.1955	.0335	.8715	.7095	.5474	.3854	.2234	.8994	.5754	.2514
997	.6818	.5198	.3578	.1957	.0337	.8717	.7097	.5477	.3857	.2237	.8997	.5757	.2517
419000	32.6820	33.5200	34.3580	35.1960	36.0340	36.8720	37.7100	38.5480	39.3860	40.2240	41.9000	43.5760	45.2520

HARMONICS

BASIC FREQ.	52	54	56	58	60	62	64	66	68	70	72	74	76
419000	21.7880	22.6260	23.4640	24.3020	25.1400	25.9780	26.8160	27.6540	28.4920	29.3300	30.1680	31.0060	31.8440
003	.7882	.6262	.4642	.3022	.1402	.9782	.8162	.6542	.4922	.3302	.1682	.0062	.8442
006	.7883	.6263	.4643	.3023	.1404	.9784	.8164	.6544	.4924	.3304	.1684	.0064	.8445
009	.7885	.6265	.4645	.3025	.1405	.9786	.8166	.6546	.4926	.3306	.1686	.0067	.8447
012	.7886	.6266	.4647	.3027	.1407	.9787	.8168	.6548	.4928	.3308	.1689	.0069	.8449
419015	21.7888	22.6268	23.4648	24.3029	25.1409	25.9789	26.8170	27.6550	28.4930	29.3311	30.1691	31.0071	31.8451
018	.7889	.6270	.4650	.3030	.1411	.9791	.8172	.6552	.4932	.3313	.1693	.0073	.8454
021	.7891	.6271	.4652	.3032	.1413	.9793	.8173	.6554	.4934	.3315	.1695	.0076	.8456
024	.7892	.6273	.4653	.3034	.1414	.9795	.8175	.6556	.4936	.3317	.1697	.0078	.8458
027	.7894	.6275	.4655	.3036	.1416	.9797	.8177	.6558	.4938	.3319	.1699	.0080	.8461
419030	21.7896	22.6276	23.4657	24.3037	25.1418	25.9799	26.8179	27.6560	28.4940	29.3321	30.1702	31.0082	31.8463
033	.7897	.6278	.4658	.3039	.1420	.9800	.8181	.6562	.4942	.3323	.1704	.0084	.8465
036	.7899	.6279	.4660	.3041	.1422	.9802	.8183	.6564	.4944	.3325	.1706	.0087	.8467
039	.7900	.6281	.4662	.3043	.1423	.9804	.8185	.6566	.4947	.3327	.1708	.0089	.8470
042	.7902	.6283	.4664	.3044	.1425	.9806	.8187	.6568	.4949	.3329	.1710	.0091	.8472
419045	21.7903	22.6284	23.4665	24.3046	25.1427	25.9808	26.8189	27.6570	28.4951	29.3332	30.1712	31.0093	31.8474
048	.7905	.6286	.4667	.3048	.1429	.9810	.8191	.6572	.4953	.3334	.1715	.0096	.8476
051	.7907	.6288	.4669	.3050	.1431	.9812	.8193	.6574	.4955	.3336	.1717	.0098	.8479
054	.7908	.6289	.4670	.3051	.1432	.9813	.8195	.6576	.4957	.3338	.1719	.0100	.8481
057	.7910	.6291	.4672	.3053	.1434	.9815	.8196	.6578	.4959	.3340	.1721	.0102	.8483
419060	21.7911	22.6292	23.4674	24.3055	25.1436	25.9817	26.8198	27.6580	28.4961	29.3342	30.1723	31.0104	31.8486
063	.7913	.6294	.4675	.3057	.1438	.9819	.8200	.6582	.4963	.3344	.1725	.0107	.8488
066	.7914	.6296	.4677	.3058	.1440	.9821	.8202	.6584	.4965	.3346	.1728	.0109	.8490
069	.7916	.6297	.4679	.3060	.1441	.9823	.8204	.6586	.4967	.3348	.1730	.0111	.8492
072	.7917	.6299	.4680	.3062	.1443	.9825	.8206	.6588	.4969	.3350	.1732	.0113	.8495
419075	21.7919	22.6301	23.4682	24.3064	25.1445	25.9827	26.8208	27.6590	28.4971	29.3353	30.1734	31.0116	31.8497
078	.7921	.6302	.4684	.3065	.1447	.9828	.8210	.6591	.4973	.3355	.1736	.0118	.8499
081	.7922	.6304	.4685	.3067	.1449	.9830	.8212	.6593	.4975	.3357	.1738	.0120	.8502
084	.7924	.6305	.4687	.3069	.1450	.9832	.8214	.6595	.4977	.3359	.1740	.0122	.8504
087	.7925	.6307	.4689	.3070	.1452	.9834	.8216	.6597	.4979	.3361	.1743	.0124	.8506
419090	21.7927	22.6309	23.4690	24.3072	25.1454	25.9836	26.8218	27.6599	28.4981	29.3363	30.1745	31.0127	31.8508
093	.7928	.6310	.4692	.3074	.1456	.9838	.8220	.6601	.4983	.3365	.1747	.0129	.8511
096	.7930	.6312	.4694	.3076	.1458	.9840	.8221	.6603	.4985	.3367	.1749	.0131	.8513
099	.7931	.6313	.4695	.3077	.1459	.9841	.8223	.6605	.4987	.3369	.1751	.0133	.8515
102	.7933	.6315	.4697	.3079	.1461	.9843	.8225	.6607	.4989	.3371	.1753	.0135	.8518
419105	21.7935	22.6317	23.4699	24.3081	25.1463	25.9845	26.8227	27.6609	28.4991	29.3374	30.1756	31.0138	31.8520
108	.7936	.6318	.4700	.3083	.1465	.9847	.8229	.6611	.4993	.3376	.1758	.0140	.8522
111	.7938	.6320	.4702	.3084	.1467	.9849	.8231	.6613	.4995	.3378	.1760	.0142	.8524
114	.7939	.6322	.4704	.3086	.1468	.9851	.8233	.6615	.4998	.3380	.1762	.0144	.8527
117	.7941	.6323	.4706	.3088	.1470	.9853	.8235	.6617	.5000	.3382	.1764	.0147	.8529
419120	21.7942	22.6325	23.4707	24.3090	25.1472	25.9854	26.8237	27.6619	28.5002	29.3384	30.1766	31.0149	31.8531
123	.7944	.6326	.4709	.3091	.1474	.9856	.8239	.6621	.5004	.3386	.1769	.0151	.8533
126	.7946	.6328	.4711	.3093	.1476	.9858	.8241	.6623	.5006	.3388	.1771	.0153	.8536
129	.7947	.6330	.4712	.3095	.1477	.9860	.8243	.6625	.5008	.3390	.1773	.0155	.8538
132	.7949	.6331	.4714	.3097	.1479	.9862	.8244	.6627	.5010	.3392	.1775	.0158	.8540
419135	21.7950	22.6333	23.4716	24.3098	25.1481	25.9864	26.8246	27.6629	28.5012	29.3395	30.1777	31.0160	31.8543
138	.7952	.6335	.4717	.3100	.1483	.9866	.8248	.6631	.5014	.3397	.1779	.0162	.8545
141	.7953	.6336	.4719	.3102	.1485	.9867	.8250	.6633	.5016	.3399	.1782	.0164	.8547
144	.7955	.6338	.4721	.3104	.1486	.9869	.8252	.6635	.5018	.3401	.1784	.0167	.8549
147	.7956	.6339	.4722	.3105	.1488	.9871	.8254	.6637	.5020	.3403	.1786	.0169	.8552
419150	21.7958	22.6341	23.4724	24.3107	25.1490	25.9873	26.8256	27.6639	28.5022	29.3405	30.1788	31.0171	31.8554
153	.7960	.6343	.4726	.3109	.1492	.9875	.8258	.6641	.5024	.3407	.1790	.0173	.8556
156	.7961	.6344	.4727	.3110	.1494	.9877	.8260	.6643	.5026	.3409	.1792	.0175	.8559
159	.7963	.6346	.4729	.3112	.1495	.9879	.8262	.6645	.5028	.3411	.1794	.0178	.8561
162	.7964	.6347	.4731	.3114	.1497	.9880	.8264	.6647	.5030	.3413	.1797	.0180	.8563
419165	21.7966	22.6349	23.4732	24.3116	25.1499	25.9882	26.8266	27.6649	28.5032	29.3416	30.1799	31.0182	31.8565
168	.7967	.6351	.4734	.3117	.1501	.9884	.8268	.6651	.5034	.3418	.1801	.0184	.8568
171	.7969	.6352	.4736	.3119	.1503	.9886	.8269	.6653	.5036	.3420	.1803	.0187	.8570
174	.7970	.6354	.4737	.3121	.1504	.9888	.8271	.6655	.5038	.3422	.1805	.0189	.8572
177	.7972	.6356	.4739	.3123	.1506	.9890	.8273	.6657	.5040	.3424	.1807	.0191	.8575
419180	21.7974	22.6357	23.4741	24.3124	25.1508	25.9892	26.8275	27.6659	28.5042	29.3426	30.1810	31.0193	31.8577
183	.7975	.6359	.4742	.3126	.1510	.9893	.8277	.6661	.5044	.3428	.1812	.0195	.8579
186	.7977	.6360	.4744	.3128	.1512	.9895	.8279	.6663	.5046	.3430	.1814	.0198	.8581
189	.7978	.6362	.4746	.3130	.1513	.9897	.8281	.6665	.5049	.3432	.1816	.0200	.8584
192	.7980	.6364	.4748	.3131	.1515	.9899	.8283	.6667	.5051	.3434	.1818	.0202	.8586
419195	21.7981	22.6365	23.4749	24.3133	25.1517	25.9901	26.8285	27.6669	28.5053	29.3437	30.1820	31.0204	31.8588
198	.7983	.6367	.4751	.3135	.1519	.9903	.8287	.6671	.5055	.3439	.1823	.0207	.8590
201	.7985	.6369	.4753	.3137	.1521	.9905	.8289	.6673	.5057	.3441	.1825	.0209	.8593
204	.7986	.6370	.4754	.3138	.1522	.9906	.8291	.6675	.5059	.3443	.1827	.0211	.8595
207	.7988	.6372	.4756	.3140	.1524	.9908	.8292	.6677	.5061	.3445	.1829	.0213	8597
419210	21.7989	22.6373	23.4758	24.3142	25.1526	25.9910	26.8294	27.6679	28.5063	29.3447	30.1831	31.0215	31.8600
213	.7991	.6375	.4759	.3144	.1528	.9912	.8296	.6681	.5065	.3449	.1833	.0218	.8602
216	.7992	.6377	.4761	.3145	.1530	.9914	.8298	.6683	.5067	.3451	.1836	.0220	.8604
219	.7994	.6378	.4763	.3147	.1531	.9916	.8300	.6685	.5069	.3453	.1838	.0222	.8606
222	.7995	.6380	.4764	.3149	.1533	.9918	.8302	.6687	.5071	.3455	.1840	.0224	.8609
419225	21.7997	22.6382	23.4766	24.3151	25.1535	25.9920	26.8304	27.6689	28.5073	29.3458	30.1842	31.0227	31.8611
228	.7999	.6383	.4768	.3152	.1537	.9921	.8306	.6690	.5075	.3460	.1844	.0229	.8613
231	.8000	.6385	.4769	.3154	.1539	.9923	.8308	.6692	.5077	.3462	.1846	.0231	.8616
234	.8002	.6386	.4771	.3156	.1540	.9925	.8310	.6694	.5079	.3464	.1848	.0233	.8618
237	.8003	.6388	.4773	.3157	.1542	.9927	.8312	.6696	.5081	.3466	.1851	.0235	.8620
419240	21.8005	22.6390	23.4774	24.3159	25.1544	25.9929	26.8314	27.6698	28.5083	29.3468	30.1853	31.0238	31.8622
243	.8006	.6391	.4776	.3161	.1546	.9931	.8316	.6700	.5085	.3470	.1855	.0240	.8625
246	.8008	.6393	.4778	.3163	.1548	.9933	.8317	.6702	.5087	.3472	.1857	.0242	.8627
249	.8009	.6394	.4779	.3164	.1549	.9934	.8319	.6704	.5089	.3474	.1859	.0244	.8629
252	.8011	.6396	.4781	.3166	.1551	.9936	.8321	.6706	.5091	.3476	.1861	.0246	.8632
419255	21.8013	22.6398	23.4783	24.3168	25.1553	25.9938	26.8323	27.6708	28.5093	29.3479	30.1864	31.0249	31.8634
258	.8014	.6399	.4784	.3170	.1555	.9940	.8325	.6710	.5095	.3481	.1866	.0251	.8636
261	.8016	.6401	.4786	.3171	.1557	.9942	.8327	.6712	.5097	.3483	.1868	.0253	.8638
264	.8017	.6403	.4788	.3173	.1558	.9944	.8329	.6714	.5100	.3485	.1870	.0255	.8641
267	.8019	.6404	.4790	.3175	.1560	.9946	.8331	.6716	.5102	.3487	.1872	.0258	.8643
419270	21.8020	22.6406	23.4791	24.3177	25.1562	25.9947	26.8333	27.6718	28.5104	29.3489	30.1874	31.0260	31.8645
273	.8022	.6407	.4793	.3178	.1564	.9949	.8335	.6720	.5106	.3491	.1877	.0262	.8647
276	.8024	.6409	.4795	.3180	.1566	.9951	.8337	.6722	.5108	.3493	.1879	.0264	.8650
279	.8025	.6411	.4796	.3182	.1567	.9953	.8339	.6724	.5110	.3495	.1881	.0266	.8652
282	.8027	.6412	.4798	.3184	.1569	.9955	.8340	.6726	.5112	.3497	.1883	.0269	.8654
419285	21.8028	22.6414	23.4800	24.3185	25.1571	25.9957	26.8342	27.6728	28.5114	29.3500	30.1885	31.0271	31.8657
288	.8030	.6416	.4801	.3187	.1573	.9959	.8344	.6730	.5116	.3502	.1887	.0273	.8659
291	.8031	.6417	.4803	.3189	.1575	.9960	.8346	.6732	.5118	.3504	.1890	.0275	.8661
294	.8033	.6419	.4805	.3191	.1576	.9962	.8348	.6734	.5120	.3506	.1892	.0278	.8663
297	.8034	.6420	.4806	.3192	.1578	.9964	.8350	.6736	.5122	.3508	.1894	.0280	.8666
419300	21.8036	22.6422	23.4808	24.3194	25.1580	25.9966	26.8352	27.6738	28.5124	29.3510	30.1896	31.0282	31.8668

MEGACYCLES PER SECOND

H A R M O N I C S

BASIC FREQ.	78	80	82	84	86	88	90	92	94	96	100	104	108
419000	32.6820	33.5200	34.3580	35.1960	36.0340	36.8720	37.7100	38.5480	39.3860	40.2240	41.9000	43.5760	45.2520
003	.6822	.5202	.3582	.1963	.0343	.8723	.7103	.5483	.3863	.2243	.9003	.5763	.2523
006	.6825	.5205	.3585	.1965	.0345	.8725	.7105	.5486	.3866	.2246	.9006	.5766	.2526
009	.6827	.5207	.3587	.1968	.0348	.8728	.7108	.5488	.3868	.2249	.9009	.5769	.2530
012	.6829	.5210	.3590	.1970	.0350	.8731	.7111	.5491	.3871	.2252	.9012	.5772	.2533
419015	32.6832	33.5212	34.3592	35.1973	36.0353	36.8733	37.7114	38.5494	39.3874	40.2254	41.9015	43.5776	45.2536
018	.6834	.5214	.3595	.1975	.0355	.8736	.7116	.5497	.3877	.2257	.9018	.5779	.2539
021	.6836	.5217	.3597	.1978	.0358	.8738	.7119	.5499	.3880	.2260	.9021	.5782	.2543
024	.6839	.5219	.3600	.1980	.0361	.8741	.7122	.5502	.3883	.2263	.9024	.5785	.2546
027	.6841	.5222	.3602	.1983	.0363	.8744	.7124	.5505	.3885	.2266	.9027	.5788	.2549
419030	32.6843	33.5224	34.3605	35.1985	36.0366	36.8746	37.7127	38.5508	39.3888	40.2269	41.9030	43.5791	45.2552
033	.6846	.5226	.3607	.1988	.0368	.8749	.7130	.5510	.3891	.2272	.9033	.5794	.2556
036	.6848	.5229	.3610	.1990	.0371	.8752	.7132	.5513	.3894	.2275	.9036	.5797	.2559
039	.6850	.5231	.3612	.1993	.0374	.8754	.7135	.5516	.3897	.2277	.9039	.5801	.2562
042	.6853	.5234	.3614	.1995	.0376	.8757	.7138	.5519	.3899	.2280	.9042	.5804	.2565
419045	32.6855	33.5236	34.3617	35.1998	36.0379	36.8760	37.7141	38.5521	39.3902	40.2283	41.9045	43.5807	45.2569
048	.6857	.5238	.3619	.2000	.0381	.8762	.7143	.5524	.3905	.2286	.9048	.5810	.2572
051	.6860	.5241	.3622	.2003	.0384	.8765	.7146	.5527	.3908	.2289	.9051	.5813	.2575
054	.6862	.5243	.3624	.2005	.0386	.8768	.7149	.5530	.3911	.2292	.9054	.5816	.2578
057	.6864	.5246	.3627	.2008	.0389	.8770	.7151	.5532	.3914	.2295	.9057	.5819	.2582
419060	32.6867	33.5248	34.3629	35.2010	36.0392	36.8773	37.7154	38.5535	39.3916	40.2298	41.9060	43.5822	45.2585
063	.6869	.5250	.3632	.2013	.0394	.8775	.7157	.5538	.3919	.2300	.9063	.5826	.2588
066	.6871	.5253	.3634	.2015	.0397	.8778	.7159	.5541	.3922	.2303	.9066	.5829	.2591
069	.6874	.5255	.3637	.2018	.0399	.8781	.7162	.5543	.3925	.2306	.9069	.5823	.2595
072	.6876	.5258	.3639	.2020	.0402	.8783	.7165	.5546	.3928	.2309	.9072	.5835	.2598
419075	32.6879	33.5260	34.3642	35.2023	36.0405	36.8786	37.7168	38.5549	39.3931	40.2312	41.9075	43.5838	45.2601
078	.6881	.5262	.3644	.2026	.0407	.8789	.7170	.5552	.3933	.2315	.9078	.5841	.2604
081	.6883	.5265	.3646	.2028	.0410	.8791	.7173	.5555	.3936	.2318	.9081	.5844	.2607
084	.6886	.5267	.3649	.2031	.0412	.8794	.7176	.5557	.3939	.2321	.9084	.5847	.2611
087	.6888	.5270	.3651	.2033	.0415	.8797	.7178	.5560	.3942	.2324	.9087	.5850	.2614
419090	32.6890	33.5272	34.3654	35.2036	36.0417	36.8799	37.7181	38.5563	39.3945	40.2326	41.9090	43.5854	45.2617
093	.6893	.5274	.3656	.2038	.0420	.8802	.7184	.5566	.3947	.2329	.9093	.5857	.2620
096	.6895	.5277	.3659	.2041	.0423	.8804	.7186	.5568	.3950	.2332	.9096	.5860	.2624
099	.6897	.5279	.3661	.2043	.0425	.8807	.7189	.5571	.3943	.2335	.9099	.5863	.2627
102	.6900	.5282	.3664	.2046	.0428	.8810	.7192	.5574	.3956	.2338	.9102	.5866	.2630
419105	32.6902	33.5284	34.3666	35.2048	36.0430	36.8812	37.7195	38.5577	39.3959	40.2341	41.9105	43.5869	45.2633
108	.6904	.5286	.3669	.2051	.0433	.8815	.7197	.5579	.3962	.2344	.9108	.5872	.2637
111	.6907	.5289	.3671	.2053	.0435	.8818	.7200	.5582	.3964	.2347	.9111	.5875	.2640
114	.6909	.5291	.3673	.2056	.0438	.8820	.7203	.5585	.3967	.2349	.9114	.5879	.2643
117	.6911	.5294	.3676	.2058	.0441	.8823	.7205	.5588	.3970	.2352	.9117	.5882	.2646
419120	32.6914	33.5296	34.3678	35.2061	36.0443	36.8826	37.7208	38.5590	39.3973	40.2355	41.9120	43.5885	45.2650
123	.6916	.5298	.3681	.2063	.0446	.8828	.7211	.5593	.3976	.2358	.9123	.5888	.2653
126	.6918	.5301	.3683	.2066	.0448	.8831	.7213	.5596	.3978	.2361	.9126	.5891	.2656
129	.6921	.5303	.3686	.2068	.0451	.8834	.7216	.5599	.3981	.2364	.9129	.5894	.2659
132	.6923	.5306	.3688	.2071	.0454	.8836	.7219	.5601	.3984	.2367	.9132	.5897	.2663
419135	32.6925	33.5308	34.3691	35.2073	36.0456	36.8839	37.7222	38.5604	39.3987	40.2370	41.9135	43.5900	45.2666
138	.6928	.5310	.3693	.2076	.0459	.8841	.7224	.5607	.3990	.2372	.9138	.5904	.2669
141	.6930	.5313	.3696	.2078	.0461	.8844	.7227	.5610	.3993	.2375	.9141	.5907	.2672
144	.6932	.5315	.3698	.2081	.0464	.8847	.7230	.5612	.3995	.2378	.9144	.5910	.2676
147	.6935	.5318	.3701	.2083	.0466	.8849	.7232	.5615	.3998	.2381	.9147	.5913	.2679
419150	32.6937	33.5320	34.3703	35.2086	36.0469	36.8852	37.7235	38.5618	39.4001	40.2384	41.9150	43.5916	45.2682
153	.6939	.5322	.3705	.2089	.0472	.8855	.7238	.5621	.4004	.2387	.9153	.5919	.2685
156	.6942	.5325	.3708	.2091	.0474	.8857	.7240	.5624	.4007	.2390	.9156	.5922	.2688
159	.6944	.5327	.3710	.2094	.0477	.8860	.7243	.5626	.4009	.2393	.9159	.5925	.2692
162	.6946	.5330	.3713	.2096	.0479	.8863	.7246	.5629	.4012	.2396	.9162	.5928	.2695
419165	32.6949	33.5332	34.3715	35.2099	36.0482	36.8865	37.7249	38.5632	39.4015	40.2398	41.9165	43.5932	45.2698
168	.6951	.5334	.3718	.2101	.0484	.8868	.7251	.5635	.4018	.2401	.9168	.5935	.2701
171	.6953	.5337	.3720	.2104	.0487	.8870	.7254	.5637	.4021	.2404	.9171	.5938	.2705
174	.6956	.5339	.3723	.2106	.0490	.8873	.7257	.5640	.4024	.2407	.9174	.5941	.2708
177	.6958	.5342	.3725	.2109	.0492	.8876	.7259	.5643	.4026	.2410	.9177	.5944	.2711
419180	32.6960	33.5344	34.3728	35.2111	36.0495	36.8878	37.7262	38.5646	39.4029	40.2413	41.9180	43.5947	45.2714
183	.6963	.5346	.3730	.2114	.0497	.8881	.7265	.5648	.4032	.2416	.9183	.5950	.2718
186	.6965	.5349	.3733	.2116	.0500	.8884	.7257	.5651	.4035	.2419	.9186	.5953	.2721
189	.6967	.5351	.3735	.2119	.0503	.8886	.7270	.5654	.4038	.2421	.9189	.5957	.2724
192	.6970	.5354	.3737	.2121	.0505	.8889	.7273	.5657	.4040	.2424	.9192	.5960	.2727
419195	32.6972	33.5356	34.3740	35.2124	36.0508	36.8892	37.7276	38.5659	39.4043	40.2427	41.9195	43.5963	45.2731
198	.6974	.5358	.3742	.2126	.0510	.8894	.7278	.5662	.4046	.2340	.9198	.5966	.2734
201	.6977	.5361	.3745	.2129	.0513	.8897	.7281	.5665	.4049	.2433	.9201	.5969	.2737
204	.6979	.5363	.3747	.2131	.0515	.8900	.7284	.5668	.4052	.2436	.9204	.5972	.2740
207	.6981	.5366	.3750	.2134	.0518	.8902	.7286	.5670	.4055	.2439	.9207	.5975	.2744
419210	32.6984	33.5368	34.3752	35.2136	36.0521	36.8905	37.7289	38.5673	39.4057	40.2442	41.9210	43.5978	45.2747
213	.6986	.5370	.3755	.2139	.0523	.8907	.7292	.5676	.4060	.2444	.9213	.5982	.2750
216	.6988	.5373	.3757	.2141	.0526	.8910	.7294	.5679	.4063	.2447	.9216	.5985	.2753
219	.6991	.5375	.3760	.2144	.0528	.8913	.7297	.5681	.4066	.2450	.9219	.5988	.2757
222	.6993	.5378	.3762	.2146	.0531	.8915	.7300	.5684	.4069	.2453	.9222	.5991	.2760
419225	32.6996	33.5380	34.3765	35.2149	36.0534	36.8918	37.7303	38.5687	39.4072	40.2456	41.9225	43.5994	45.2763
228	.6998	.5382	.3767	.2152	.0536	.8921	.7305	.5690	.4074	.2459	.9228	.5997	.2766
231	.7000	.5385	.3769	.2154	.0539	.8923	.7308	.5693	.4077	.2462	.9231	.6000	.2769
234	.7003	.5387	.3772	.2157	.0451	.8926	.7311	.5695	.4080	.2465	.9234	.6003	.2773
237	.7005	.5390	.3774	.2159	.0544	.8929	.7313	.5698	.4083	.2468	.9237	.6006	.2776
419240	32.7007	33.5392	34.3777	35.2162	36.0546	36.8931	37.7316	38.5701	39.4086	40.2470	41.9240	43.6010	45.2779
243	.7010	.5394	.3779	.2164	.0549	.8934	.7319	.5704	.4088	.2473	.9243	.6013	.2782
246	.7012	.5397	.3782	.2167	.0552	.8936	.7321	.5706	.4091	.2476	.9246	.6016	.2786
249	.7014	.5399	.3784	.2169	.0554	.8939	.7324	.5709	.4094	.2479	.9249	.6019	.2789
252	.7017	.5402	.3787	.2172	.0557	.8942	.7327	.5712	.4097	.2482	.9252	.6022	.2792
419255	32.7019	33.5404	34.3789	35.2174	36.0559	36.8944	37.7330	38.5715	39.4100	40.2485	41.9255	43.6025	45.2795
258	.7021	.5406	.3792	.2177	.0562	.8947	.7332	.5717	.4103	.2488	.9258	.6028	.2799
261	.7024	.5409	.3794	.2179	.0564	.8950	.7335	.5720	.4105	.2491	.9261	.6031	.2802
264	.7026	.5411	.3796	.2182	.0567	.8952	.7338	.5723	.4108	.2493	.9264	.6035	.2805
267	.7028	.5414	.3799	.2184	.0570	.8955	.7340	.5726	.4111	.2496	.9267	.6038	.2808
419270	32.7031	33.5416	34.3801	35.2187	36.0572	36.8958	37.7343	38.5728	39.4114	40.2499	41.9270	43.6041	45.2812
273	.7033	.5418	.3804	.2189	.0575	.8960	.7346	.5731	.4117	.2502	.9273	.6044	.2815
276	.7035	.5421	.3806	.2192	.0577	.8963	.7348	.5734	.4119	.2505	.9276	.6047	.2818
279	.7038	.5423	.3809	.2194	.0580	.8966	.7351	.5737	.4122	.2508	.9279	.6050	.2821
282	.7040	.5426	.3811	.2197	.0583	.8968	.7354	.5739	.4125	.2511	.9282	.6053	.2825
419285	32.7042	33.5428	34.3814	35.2199	36.0585	36.8971	37.7357	38.5742	39.4128	40.2514	41.9285	43.6056	45.2828
288	.7045	.5430	.3816	.2202	.0588	.8973	.7359	.5745	.4131	.2516	.9288	.6060	.2831
291	.7047	.5433	.3819	.2204	.0590	.8976	.7362	.5748	.4134	.2519	.9291	.6063	.2834
294	.7049	.5435	.3821	.2207	.0593	.8979	.7365	.5750	.4126	.2522	.9294	.6066	.2838
297	.7052	.5438	.3824	.2209	.0595	.8981	.7367	.5753	.4139	.2525	.9297	.6069	.2841
419300	32.7054	33.5440	34.3826	35.2212	36.0598	36.8984	37.7370	38.5756	39.4142	40.2528	41.9300	43.6072	45.2844

MEGACYCLES PER SECOND

HARMONICS

BASIC FREQ.	52	54	56	58	60	62	64	66	68	70	72	74	76
419300	21.8036	22.6422	23.4808	24.3194	25.1580	25.9966	26.8352	27.6738	28.5124	29.3510	30.1896	31.0282	31.8668
303	.8038	.6424	.4810	.3196	.1582	.9968	.8354	.6740	.5126	.3512	.1898	.0284	.8670
306	.8039	.6425	.4811	.3197	.1584	.9970	.8356	.6742	.5128	.3514	.1900	.0286	.8673
309	.8041	.6427	.4813	.3199	.1585	.9972	.8358	.6744	.5130	.3516	.1902	.0289	.8675
312	.8042	.6428	.4815	.3201	.1587	.9973	.8360	.6746	.5132	.3518	.1905	.0291	.8677
419315	21.8044	22.6430	23.4816	24.3203	25.1589	25.9975	26.8362	27.6748	28.5134	29.3521	30.1907	31.0293	31.8679
318	.8045	.6432	.4818	.3204	.1591	.9977	.8364	.6750	.5136	.3523	.1909	.0295	.8682
321	.8047	.6433	.4820	.3206	.1593	.9979	.8365	.6752	.5138	.3525	.1911	.0298	.8684
324	.8048	.6435	.4821	.3208	.1594	.9981	.8367	.6754	.5140	.3527	.1913	.0300	.8686
327	.8050	.6437	.4823	.3210	.1596	.9983	.8369	.6756	.5142	.3529	.1915	.0302	.8689
419330	21.8052	22.6438	23.4825	24.3211	25.1598	25.9985	26.8371	27.6758	28.5144	29.3531	30.1918	31.0304	31.8691
333	.8053	.6440	.4826	.3213	.1600	.9986	.8373	.6760	.5146	.3533	.1920	.0306	.8693
336	.8055	.6441	.4828	.3215	.1602	.9988	.8375	.6762	.5148	.3535	.1922	.0309	.8695
339	.8056	.6443	.4830	.3217	.1603	.9990	.8377	.6764	.5151	.3537	.1924	.0311	.8698
342	.8058	.6445	.4832	.3218	.1605	.9992	.8379	.6766	.5153	.3539	.1926	.0313	.8700
419345	21.8059	22.6446	23.4833	24.3220	25.1607	25.9994	26.8381	27.6768	28.5155	29.3542	30.1928	31.0315	31.8702
348	.8061	.6448	.4835	.3222	.1609	.9996	.8383	.6770	.5157	.3544	.1931	.0318	.8704
351	.8063	.6450	.4837	.3224	.1611	.9998	.8385	.6772	.5159	.3546	.1933	.0320	.8707
354	.8064	.6451	.4838	.3225	.1612	.9999	.8387	.6774	.5161	.3548	.1935	.0322	.8709
357	.8066	.6453	.4840	.3227	.1614	26.0001	.8388	.6776	.5163	.3550	.1937	.0324	.8711
419360	21.8067	22.6454	23.4842	24.3229	25.1616	26.0003	26.8390	27.6778	28.5165	29.3552	30.1939	31.0326	31.8714
363	.8069	.6456	.4843	.3231	.1618	.0005	.8392	.6780	.5167	.3554	.1941	.0329	.8716
366	.8070	.6458	.4845	.3232	.1620	.0007	.8394	.6782	.5169	.3556	.1944	.0331	.8718
369	.8072	.6459	.4847	.3234	.1621	.0009	.8396	.6784	.5171	.3558	.1946	.0333	.8720
372	.8073	.6461	.4848	.3236	.1623	.0011	.8398	.6786	.5173	.3560	.1948	.0335	.8723
419375	21.8075	22.6463	23.4850	24.3238	25.1625	26.0013	26.8400	27.6788	28.5175	29.3563	30.1950	31.0338	31.8725
378	.8077	.6464	.4852	.3239	.1627	.0014	.8402	.6789	.5177	.3565	.1952	.0340	.8727
381	.8078	.6466	.4853	.3241	.1629	.0016	.8404	.6791	.5179	.3567	.1954	.0342	.8730
384	.8080	.6467	.4855	.3243	.1630	.0018	.8406	.6793	.5181	.3569	.1956	.0344	.8732
387	.8081	.6469	.4857	.3244	.1632	.0020	.8408	.6795	.5183	.3571	.1959	.0346	.8734
419390	21.8083	22.6471	23.4858	24.3246	25.1634	26.0022	26.8410	27.6797	28.5185	29.3573	30.1961	31.0349	31.8736
393	.8084	.6472	.4860	.3248	.1636	.0024	.8412	.6799	.5187	.3575	.1963	.0351	.8739
396	.8086	.6474	.4862	.3250	.1638	.0026	.8413	.6801	.5189	.3577	.1965	.0353	.8741
399	.8087	.6475	.4863	.3251	.1639	.0027	.8415	.6803	.5191	.3579	.1967	.0355	.8743
402	.8089	.6477	.4865	.3253	.1641	.0029	.8417	.6805	.5193	.3581	.1969	.0357	.8746
419405	21.8091	22.6479	23.4867	24.3255	25.1643	26.0031	26.8419	27.6807	28.5195	29.3584	30.1972	31.0360	31.8748
408	.8092	.6480	.4868	.3257	.1645	.0033	.8421	.6809	.5197	.3586	.1974	.0362	.8750
411	.8094	.6482	.4870	.3258	.1647	.0035	.8423	.6811	.5199	.3588	.1976	.0364	.8752
414	.8095	.6484	.4872	.3260	.1648	.0037	.8425	.6813	.5202	.3590	.1978	.0366	.8755
417	.8097	.6485	.4874	.3262	.1650	.0039	.8427	.6815	.5204	.3592	.1980	.0369	.8757
419420	21.8098	22.6487	23.4875	24.3264	25.1652	26.0040	26.8429	27.6817	28.5206	29.3594	30.1982	31.0371	31.8759
423	.8100	.6488	.4877	.3265	.1654	.0042	.8431	.6819	.5208	.3596	.1985	.0373	.8761
426	.8102	.6490	.4879	.3267	.1656	.0044	.8433	.6821	.5210	.3598	.1987	.0375	.8764
429	.8103	.6492	.4880	.3269	.1657	.0046	.8435	.6823	.5212	.3600	.1989	.0377	.8766
432	.8105	.6493	.4882	.3271	.1659	.0048	.8436	.6825	.5214	.3602	.1991	.0380	.8768
419435	21.8106	22.6495	23.4884	24.3272	25.1661	26.0050	26.8438	27.6827	28.5216	29.3605	30.1993	31.0382	31.8771
438	.8108	.6497	.4885	.3274	.1663	.0052	.8440	.6829	.5218	.3607	.1995	.0384	.8773
441	.8109	.6498	.4887	.3276	.1665	.0053	.8442	.6831	.5220	.3609	.1998	.0386	.8775
444	.8111	.6500	.4889	.3278	.1666	.0055	.8444	.6833	.5222	.3611	.2000	.0389	.8777
447	.8112	.6501	.4890	.3279	.1668	.0057	.8446	.6835	.5224	.3613	.2002	.0391	.8780
419450	21.8114	22.6503	23.4892	24.3281	25.1670	26.0059	26.8448	27.6837	28.5226	29.3615	30.2004	31.0393	31.8782
453	.8116	.6505	.4894	.3283	.1672	.0061	.8450	.6839	.5228	.3617	.2006	.0395	.8784
456	.8117	.6506	.4895	.3284	.1674	.0063	.8452	.6841	.5230	.3619	.2008	.0397	.8787
459	.8119	.6508	.4897	.3286	.1675	.0065	.8454	.6843	.5232	.3621	.2010	.0400	.8789
462	.8120	.6509	.4899	.3288	.1677	.0066	.8456	.6845	.5234	.3623	.2013	.0402	.8791
419465	21.8122	22.6511	23.4900	24.3290	25.1679	26.0068	26.8458	27.6847	28.5236	29.3626	30.2015	31.0404	31.8793
468	.8123	.6513	.4902	.3291	.1681	.0070	.8460	.6849	.5238	.3628	.2017	.0406	.8796
471	.8125	.6514	.4904	.3293	.1683	.0072	.8461	.6851	.5240	.3630	.2019	.0409	.8798
474	.8126	.6516	.4905	.3295	.1684	.0074	.8463	.6853	.5242	.3632	.2021	.0411	.8800
477	.8128	.6518	.4907	.3297	.1686	.0076	.8465	.6855	.5244	.3634	.2023	.0413	.8803
419480	21.8130	22.6519	23.4909	24.3298	25.1688	26.0078	26.8467	27.6857	28.5256	29.3636	30.2026	31.0415	31.8805
483	.8131	.6521	.4910	.3300	.1690	.0079	.8469	.6859	.5248	.3638	.2028	.0417	.8807
486	.8133	.6522	.4912	.3302	.1692	.0081	.8471	.6861	.5250	.3640	.2030	.0420	.8809
489	.8134	.6524	.4914	.3304	.1693	.0083	.8473	.6863	.5253	.3642	.2032	.0422	.8812
492	.8136	.6526	.4916	.3305	.1695	.0085	.8475	.6865	.5255	.3644	.2034	.0424	.8814
419495	21.8137	22.6527	23.4917	24.3307	25.1697	26.0087	26.8477	27.6867	28.5257	29.3647	30.2036	31.0426	31.8816
498	.8139	.6529	.4919	.3309	.1699	.0089	.8479	.6869	.5259	.3649	.2039	.0429	.8818
501	.8141	.6531	.4921	.3311	.1701	.0091	.8481	.6871	.5261	.3651	.2041	.0431	.8821
504	.8142	.6532	.4922	.3312	.1702	.0092	.8483	.6873	.5263	.3653	.2043	.0433	.8823
507	.8144	.6534	.4924	.3314	.1704	.0094	.8484	.6875	.5265	.3655	.2045	.0435	.8825
419510	21.8145	22.6535	23.4926	24.3316	25.1706	26.0096	26.8486	27.6877	28.5267	29.3657	30.2047	31.0437	31.8828
513	.8147	.6537	.4927	.3318	.1708	.0098	.8488	.6879	.5269	.3659	.2049	.0440	.8830
516	.8148	.6539	.4929	.3319	.1710	.0100	.8490	.6881	.5271	.3661	.2052	.0442	.8832
519	.8150	.6540	.4931	.3321	.1711	.0102	.8492	.6883	.5273	.3663	.2054	.0444	.8834
522	.8151	.6542	.4932	.3323	.1713	.0104	.8494	.6885	.5275	.3665	.2056	.0446	.8837
419525	21.8153	22.6544	23.4934	24.3325	25.1715	26.0106	26.8496	27.6887	28.5277	29.3668	30.2058	31.0449	31.8839
528	.8155	.6545	.4936	.3326	.1717	.0107	.8498	.6888	.5279	.3670	.2060	.0451	.8841
531	.8156	.6547	.4937	.3328	.1719	.0109	.8500	.6890	.5281	.3672	.2062	.0453	.8844
534	.8158	.6548	.4939	.3330	.1720	.0111	.8502	.6892	.5283	.3674	.2064	.0455	.8846
537	.8159	.6550	.4941	.3331	.1722	.0113	.8504	.6894	.5285	.3676	.2067	.0457	.8848
419540	21.8161	22.6552	23.4942	24.3333	25.1724	26.0115	26.8506	27.6896	28.5287	29.3678	30.2069	31.0460	31.8850
543	.8162	.6553	.4944	.3335	.1726	.0117	.8508	.6898	.5289	.3680	.2071	.0462	.8853
546	.8164	.6555	.4946	.3337	.1728	.0119	.8509	.6900	.5291	.3682	.2073	.0464	.8855
549	.8165	.6556	.4947	.3338	.1729	.0120	.8511	.6902	.5293	.3684	.2075	.0466	.8857
552	.8167	.6558	.4949	.3340	.1731	.0122	.8513	.6904	.5295	.3686	.2077	.0468	.8860
419555	21.8169	22.6560	23.4951	24.3342	25.1733	26.0124	26.8515	27.6906	28.5297	29.3689	30.2080	31.0471	31.8862
558	.8170	.6561	.4952	.3344	.1735	.0126	.8517	.6908	.5299	.3691	.2082	.0473	.8864
561	.8172	.6563	.4954	.3345	.1737	.0128	.8519	.6910	.5301	.3693	.2084	.0475	.8866
564	.8173	.6565	.4956	.3347	.1738	.0130	.8521	.6912	.5304	.3695	.2086	.0477	.8869
567	.8175	.6566	.4958	.3349	.1740	.0132	.8523	.6914	.5306	.3697	.2088	.0480	.8871
419570	21.8176	22.6568	23.4959	24.3351	25.1742	26.0133	26.8525	27.6916	28.5308	29.3699	30.2090	31.0482	31.8873
573	.8178	.6569	.4961	.3352	.1744	.0135	.8527	.6918	.5310	.3701	.2093	.0484	.8875
576	.8180	.6571	.4963	.3354	.1746	.0137	.8529	.6920	.5312	.3703	.2095	.0486	.8878
579	.8181	.6573	.4964	.3356	.1747	.0139	.8531	.6922	.5314	.3705	.2097	.0488	.8880
582	.8183	.6574	.4966	.3358	.1749	.0141	.8532	.6924	.5316	.3707	.2099	.0491	.8882
419585	21.8184	22.6576	23.4968	24.3359	25.1751	26.0143	26.8534	27.6926	28.5318	29.3710	30.2101	31.0493	31.8885
588	.8186	.6578	.4969	.3361	.1753	.0145	.8536	.6928	.5320	.3712	.2103	.0495	.8887
591	.8187	.6579	.4971	.3363	.1755	.0146	.8538	.6930	.5322	.3714	.2106	.0497	.8889
594	.8189	.6581	.4973	.3365	.1756	.0148	.8540	.6932	.5324	.3716	.2108	.0500	.8891
597	.8190	.6582	.4974	.3366	.1758	.0150	.8542	.6934	.5326	.3718	.2110	.0502	.8894
419600	21.8192	22.6584	23.4976	24.3368	25.1760	26.0152	26.8544	27.6936	28.5328	29.3720	30.2112	31.0504	31.8896

MEGACYCLES PER SECOND

H A R M O N I C S

BASIC FREQ.	78	80	82	84	86	88	90	92	94	96	100	104	108
419300	32.7054	33.5440	34.3826	35.2212	36.0598	36.8984	37.7370	38.5756	39.4142	40.2528	41.9300	43.6072	45.2844
303	.7056	.5442	.3828	.2215	.0601	.8987	.7373	.5759	.4145	.2531	.9303	.6075	.2847
306	.7059	.5445	.3831	.2217	.0603	.8989	.7375	.5762	.4148	.2534	.9306	.6078	.2850
309	.7061	.5447	.3833	.2220	.0606	.8992	.7378	.5764	.4150	.2537	.9309	.6081	.2854
312	.7063	.5450	.3836	.2222	.0608	.8995	.7381	.5767	.4153	.2540	.9312	.6084	.2857
419315	32.7066	33.5452	34.3838	35.2225	36.0611	36.8997	37.7384	38.5770	39.4156	40.2542	41.9315	43.6088	45.2860
318	.7068	.5454	.3841	.2227	.0613	.9000	.7386	.5773	.4159	.2545	.9318	.6091	.2863
321	.7070	.5457	.3843	.2230	.0616	.9002	.7389	.5775	.4162	.2548	.9321	.6094	.2867
324	.7073	.5459	.3846	.2232	.0619	.9005	.7392	.5778	.4165	.2551	.9324	.6097	.2870
327	.7075	.5462	.3848	.2235	.0621	.9008	.7394	.5781	.4167	.2554	.9327	.6100	.2873
419330	32.7077	33.5464	34.3851	35.2237	36.0624	36.9010	37.7397	38.5784	39.4170	40.2557	41.9330	43.6103	45.2876
333	.7080	.5466	.3853	.2240	.0626	.9013	.7400	.5786	.4173	.2560	.9333	.6106	.2880
336	.7082	.5469	.3856	.2242	.0629	.9016	.7402	.5789	.4176	.2563	.9336	.6109	.2883
339	.7084	.5471	.3858	.2245	.0632	.9018	.7405	.5792	.4179	.2565	.9339	.6113	.2886
342	.7087	.5474	.3860	.2247	.0634	.9021	.7408	.5795	.4181	.2568	.9342	.6116	.2889
419345	32.7089	33.5476	34.3863	35.2250	36.0637	36.9024	37.7411	38.5797	39.4184	40.2571	41.9345	43.6119	45.2893
348	.7091	.5478	.3865	.2252	.0639	.9026	.7413	.5800	.4187	.2574	.9348	.6122	.2896
351	.7094	.5481	.3868	.2255	.0642	.9029	.7416	.5803	.4190	.2577	.9351	.6125	.2899
354	.7096	.5483	.3870	.2257	.0644	.9032	.7419	.5806	.4193	.2580	.9354	.6128	.2902
357	.7098	.5486	.3873	.2260	.0647	.9034	.7421	.5808	.4196	.2583	.9357	.6131	.2906
419360	32.7101	33.5488	34.3875	35.2262	36.0650	36.9037	37.7424	38.5811	39.4198	40.2586	41.9360	43.6134	45.2909
363	.7103	.5490	.3878	.2265	.0652	.9039	.7427	.5814	.4201	.2588	.9363	.6138	.2912
366	.7105	.5493	.3880	.2267	.0655	.9042	.7429	.5817	.4204	.2591	.9366	.6141	.2915
369	.7108	.5495	.3883	.2270	.0657	.9045	.7432	.5819	.4207	.2594	.9369	.6144	.2919
372	.7110	.5498	.3885	.2272	.0660	.9047	.7435	.5822	.4210	.2597	.9372	.6147	.2922
419375	32.7113	33.5500	34.3888	35.2275	36.0663	36.9050	37.7438	38.5825	39.4213	40.2600	41.9375	43.6150	45.2925
378	.7115	.5502	.3890	.2278	.0665	.9053	.7440	.5828	.4215	.2603	.9378	.6153	.2928
381	.7117	.5505	.3892	.2280	.0668	.9055	.7443	.5831	.4218	.2606	.9381	.6156	.2931
384	.7120	.5507	.3895	.2283	.0670	.9058	.7446	.5833	.4221	.2609	.9384	.6159	.2935
387	.7122	.5510	.3897	.2285	.0673	.9061	.7448	.5836	.4224	.2612	.9387	.6162	.2938
419390	32.7124	33.5512	34.3900	35.2288	36.0675	36.9063	37.7451	38.5839	39.4227	40.2614	41.9390	43.6166	45.2941
393	.7127	.5514	.3902	.2290	.0678	.9066	.7454	.5842	.4229	.2617	.9393	.6169	.2944
396	.7129	.5517	.3905	.2293	.0681	.9068	.7456	.5844	.4232	.2620	.9396	.6172	.2948
399	.7131	.5519	.3907	.2295	.0683	.9071	.7459	.5847	.4235	.2623	.9399	.6175	.2951
402	.7134	.5522	.3910	.2298	.0686	.9074	.7462	.5850	.4238	.2626	.9402	.6178	.2954
419405	32.7136	33.5524	34.3912	35.2300	36.0688	36.9076	37.7465	38.5853	39.4241	40.2629	41.9405	43.6181	45.2957
408	.7138	.5526	.3915	.2303	.0691	.9079	.7467	.5855	.4244	.2632	.9408	.6184	.2961
411	.7141	.5529	.3917	.2305	.0693	.9082	.7470	.5858	.4246	.2635	.9411	.6187	.2964
414	.7143	.5531	.3919	.2308	.0696	.9084	.7473	.5861	.4249	.2637	.9414	.6191	.2967
417	.7145	.5534	.3922	.2310	.0699	.9087	.7475	.5864	.4252	.2640	.9417	.6194	.2970
419420	32.7148	33.5536	34.3924	35.2313	36.0701	36.9090	37.7478	38.5866	39.4255	40.2643	41.9420	43.6197	45.2974
423	.7150	.5538	.3927	.2315	.0704	.9092	.7481	.5869	.4258	.2646	.9423	.6200	.2977
426	.7152	.5541	.3929	.2318	.0706	.9095	.7483	.5872	.4260	.2649	.9426	.6203	.2980
429	.7155	.5543	.3932	.2320	.0709	.9098	.7486	.5875	.4263	.2652	.9429	.6206	.2983
432	.7157	.5546	.3934	.2323	.0712	.9100	.7489	.5877	.4266	.2655	.9432	.6209	.2987
419435	32.7159	33.5548	34.3937	35.2325	36.0714	36.9103	37.7492	38.5880	39.4269	40.2658	41.9435	43.6212	45.2990
438	.7162	.5550	.3939	.2328	.0717	.9105	.7494	.5883	.4272	.2660	.9438	.6216	.2993
441	.7164	.5553	.3942	.2330	.0719	.9108	.7497	.5886	.4275	.2663	.9441	.6219	.2996
444	.7166	.5555	.3944	.2333	.0722	.9111	.7500	.5888	.4277	.2666	.9444	.6222	.3000
447	.7169	.5558	.3947	.2335	.0724	.9113	.7502	.5891	.4280	.2669	.9447	.6225	.3003
419450	32.7171	33.5560	34.3949	35.2338	36.0727	36.9116	37.7505	38.5894	39.4283	40.2672	41.9450	43.6228	45.3006
453	.7173	.5562	.3951	.2341	.0730	.9119	.7508	.5897	.4286	.2675	.9453	.6231	.3009
456	.7176	.5565	.3954	.2343	.0732	.9121	.7510	.5900	.4289	.2678	.9456	.6234	.3012
459	.7178	.5567	.3956	.2346	.0735	.9124	.7513	.5902	.4291	.2681	.9459	.6237	.3016
462	.7180	.5570	.3959	.2348	.0737	.9127	.7516	.5905	.4294	.2684	.9462	.6240	.3019
419465	32.7183	33.5572	34.3961	35.2351	36.0740	36.9129	37.7519	38.5908	39.4297	40.2686	41.9465	43.6244	45.3022
468	.7185	.5574	.3964	.2353	.0742	.9132	.7521	.5911	.4300	.2689	.9468	.6247	.3025
471	.7187	.5577	.3966	.2356	.0745	.9134	.7524	.5913	.4303	.2692	.9471	.6250	.3029
474	.7190	.5579	.3969	.2358	.0748	.9137	.7527	.5916	.4306	.2695	.9474	.6253	.3032
477	.7192	.5582	.3971	.2361	.0750	.9140	.7529	.5919	.4308	.2698	.9477	.6256	.3035
419480	32.7194	33.5584	34.3974	35.2363	36.0753	36.9142	37.7532	38.5922	39.4311	40.2701	41.9480	43.6259	45.3038
483	.7197	.5586	.3976	.2366	.0755	.9145	.7535	.5924	.4314	.2704	.9483	.6262	.3042
486	.7199	.5589	.3979	.2368	.0758	.9148	.7537	.5927	.4317	.2707	.9486	.6265	.3045
489	.7201	.5591	.3981	.2371	.0761	.9150	.7540	.5930	.4320	.2709	.9489	.6269	.3048
492	.7204	.5594	.3983	.2373	.0763	.9153	.7543	.5933	.4322	.2712	.9492	.6272	.3051
419495	32.7206	33.5596	34.3986	35.2376	36.0766	36.9156	37.7546	38.5935	39.4325	40.2715	41.9495	43.6275	45.3055
498	.7208	.5598	.3988	.2378	.0768	.9158	.7548	.5938	.4328	.2718	.9498	.6278	.3058
501	.7211	.5601	.3991	.2381	.0771	.9161	.7551	.5941	.4331	.2721	.9501	.6281	.3061
504	.7213	.5603	.3993	.2383	.0773	.9164	.7554	.5944	.4334	.2724	.9504	.6284	.3064
507	.7215	.5606	.3996	.2386	.0776	.9166	.7556	.5946	.4337	.2727	.9507	.6287	.3068
419510	32.7218	33.5608	34.3998	35.2388	36.0779	36.9169	37.7559	38.5949	39.4339	40.2730	41.9510	43.6290	45.3071
513	.7220	.5610	.4001	.2391	.0781	.9171	.7562	.5952	.4342	.2732	.9513	.6294	.3074
516	.7222	.5613	.4003	.2393	.0784	.9174	.7564	.5955	.4345	.2735	.9516	.6297	.3077
519	.7225	.5615	.4006	.2396	.0786	.9177	.7567	.5957	.4348	.2738	.9519	.6300	.3081
522	.7227	.5618	.4008	.2398	.0789	.9179	.7570	.5960	.4351	.2741	.9522	.6303	.3084
419525	32.7230	33.5620	34.4011	35.2401	36.0792	36.9182	37.7573	38.5963	39.4354	40.2744	41.9525	43.6306	45.3087
528	.7232	.5622	.4013	.2404	.0794	.9185	.7575	.5966	.4356	.2747	.9528	.6309	.3090
531	.7234	.5625	.4015	.2406	.0797	.9187	.7578	.5969	.4359	.2750	.9531	.6312	.3093
534	.7237	.5627	.4018	.2409	.0799	.9190	.7581	.5971	.4362	.2753	.9534	.6315	.3097
537	.7239	.5630	.4020	.2411	.0802	.9193	.7583	.5974	.4365	.2756	.9537	.6318	.3100
419540	32.7241	33.5632	34.4023	35.2414	36.0804	36.9195	37.7586	38.5977	39.4368	40.2758	41.9540	43.6322	45.3103
543	.7244	.5634	.4025	.2416	.0807	.9198	.7589	.5980	.4370	.2761	.9543	.6325	.3106
546	.7246	.5637	.4028	.2419	.0810	.9200	.7591	.5982	.4373	.2764	.9546	.6328	.3110
549	.7248	.5639	.4030	.2421	.0812	.9203	.7594	.5985	.4376	.2767	.9549	.6331	.3113
552	.7251	.5642	.4033	.2424	.0815	.9206	.7597	.5988	.4379	.2770	.9552	.6334	.3116
419555	32.7253	33.5644	34.4035	35.2426	36.0817	36.9208	37.7600	38.5991	39.4382	40.2773	41.9555	43.6337	45.3119
558	.7255	.5646	.4038	.2429	.0820	.9211	.7602	.5993	.4385	.2776	.9558	.6340	.3123
561	.7258	.5649	.4040	.2431	.0822	.9214	.7605	.5996	.4387	.2779	.9561	.6343	.3126
564	.7260	.5651	.4042	.2434	.0825	.9216	.7608	.5999	.4390	.2781	.9564	.6347	.3129
567	.7262	.5654	.4045	.2436	.0828	.9219	.7610	.6002	.4393	.2784	.9567	.6350	.3132
419570	32.7265	33.5656	34.4047	35.2439	36.0830	36.9222	37.7613	38.6004	39.4396	40.2787	41.9570	43.6353	45.3136
573	.7267	.5658	.4050	.2441	.0833	.9224	.7616	.6007	.4399	.2790	.9573	.6356	.3139
576	.7269	.5661	.4052	.2444	.0835	.9227	.7618	.6010	.4401	.2793	.9576	.6359	.3142
579	.7272	.5663	.4055	.2446	.0838	.9230	.7621	.6013	.4404	.2796	.9579	.6362	.3145
582	.7274	.5666	.4057	.2449	.0841	.9232	.7624	.6015	.4407	.2799	.9582	.6365	.3149
419585	32.7276	33.5668	34.4060	35.2451	36.0843	36.9235	37.7627	38.6018	39.4410	40.2802	41.9585	43.6368	45.3152
588	.7279	.5670	.4062	.2454	.0846	.9237	.7629	.6021	.4413	.2804	.9588	.6372	.3155
591	.7281	.5673	.4065	.2456	.0848	.9240	.7632	.6024	.4416	.2807	.9591	.6375	.3158
594	.7283	.5675	.4067	.2459	.0851	.9243	.7635	.6026	.4418	.2810	.9594	.6378	.3162
597	.7286	.5678	.4070	.2461	.0853	.9245	.7637	.6029	.4421	.2813	.9597	.6381	.3165
419600	32.7288	33.5680	34.4072	35.2464	36.0856	36.9248	37.7640	38.6032	39.4424	40.2816	41.9600	43.6384	45.3168

MEGACYCLES PER SECOND

HARMONICS

BASIC FREQ.	52	54	56	58	60	62	64	66	68	70	72	74	76
419600	21.8192	22.6584	23.4976	24.3368	25.1760	26.0152	26.8544	27.6936	28.5328	29.3720	30.2112	31.0504	31.8896
603	.8194	.6586	.4978	.3370	.1762	.0154	.8546	.6938	.5330	.3722	.2114	.0506	.8898
606	.8195	.6587	.4979	.3371	.1764	.0156	.8548	.6940	.5332	.3724	.2116	.0508	.8901
609	.8197	.6589	.4981	.3373	.1765	.0158	.8550	.6942	.5334	.3726	.2118	.0511	.8903
612	.8198	.6590	.4983	.3375	.1767	.0159	.8552	.6944	.5336	.3728	.2121	.0513	.8905
419615	21.8200	22.6592	23.4984	24.3377	25.1769	26.0161	26.8554	27.6946	28.5338	29.3731	30.2123	31.0515	31.8907
618	.8201	.6594	.4986	.3378	.1771	.0163	.8556	.6948	.5340	.3733	.2125	.0517	.8910
621	.8203	.6595	.4988	.3380	.1773	.0165	.8557	.6950	.5342	.3735	.2127	.0520	.8912
624	.8204	.6597	.4989	.3382	.1774	.0167	.8559	.6952	.5344	.3737	.2129	.0522	.8914
627	.8206	.6599	.4991	.3384	.1776	.0169	.8561	.6954	.5346	.3739	.2131	.0524	.8917
419630	21.8208	22.6600	23.4993	24.3385	25.1778	26.0171	26.8563	27.6956	28.5348	29.3741	30.2134	31.0526	31.8919
633	.8209	.6602	.4994	.3387	.1780	.0172	.8565	.6958	.5350	.3743	.2136	.0528	.8921
636	.8211	.6603	.4996	.3389	.1782	.0174	.8567	.6960	.5352	.3745	.2138	.0531	.8923
639	.8212	.6605	.4998	.3391	.1783	.0176	.8569	.6962	.5355	.3747	.2140	.0533	.8926
642	.8214	.6607	.5000	.3392	.1785	.0178	.8571	.6964	.5357	.3749	.2142	.0535	.8928
419645	21.8215	22.6608	23.5001	24.3394	25.1787	26.0180	26.8573	27.6966	28.5359	29.3752	30.2144	31.0537	31.8930
648	.8217	.6610	.5003	.3396	.1789	.0182	.8575	.6968	.5361	.3754	.2147	.0540	.8932
651	.8219	.6612	.5005	.3398	.1791	.0184	.8577	.6970	.5363	.3756	.2149	.0542	.8935
654	.8220	.6613	.5006	.3399	.1792	.0185	.8579	.6972	.5365	.3758	.2151	.0544	.8937
657	.8222	.6615	.5008	.3401	.1794	.0187	.8580	.6974	.5367	.3760	.2153	.0546	.8939
419660	21.8223	22.6616	23.5010	24.3403	25.1796	26.0189	26.8582	27.6976	28.5369	29.3762	30.2155	31.0548	31.8942
663	.8225	.6618	.5011	.3405	.1798	.0191	.8584	.6978	.5371	.3764	.2157	.0551	.8944
666	.8226	.6620	.5013	.3406	.1800	.0193	.8586	.6980	.5373	.3766	.2160	.0553	.8946
669	.8228	.6621	.5015	.3408	.1801	.0195	.8588	.6982	.5375	.3768	.2162	.0555	.8948
672	.8229	.6623	.5016	.3410	.1803	.0197	.8590	.6984	.5377	.3770	.2164	.0557	.8951
419675	21.8231	22.6625	23.5018	24.3412	25.1805	26.0199	26.8592	27.6986	28.5379	29.3773	30.2166	31.0560	31.8953
678	.8233	.6626	.5020	.3413	.1807	.0200	.8594	.6987	.5381	.3775	.2168	.0562	.8955
681	.8234	.6628	.5021	.3415	.1809	.0202	.8596	.6989	.5383	.3777	.2170	.0564	.8958
684	.8236	.6629	.5023	.3417	.1810	.0204	.8598	.6991	.5385	.3779	.2172	.0566	.8960
687	.8237	.6631	.5025	.3418	.1812	.0206	.8600	.6993	.5387	.3781	.2175	.0568	.8962
419690	21.8239	22.6633	23.5026	24.3420	25.1814	26.0208	26.8602	27.6995	28.5389	29.3783	30.2177	31.0571	31.8964
693	.8240	.6634	.5028	.3422	.1816	.0210	.8604	.6997	.5391	.3785	.2179	.0573	.8967
696	.8242	.6636	.5030	.3424	.1818	.0212	.8605	.6999	.5393	.3787	.2181	.0575	.8969
699	.8243	.6637	.5031	.3425	.1819	.0213	.8607	.7001	.5395	.3789	.2183	.0577	.8971
702	.8245	.6639	.5033	.3427	.1821	.0215	.8609	.7003	.5397	.3791	.2185	.0579	.8974
419705	21.8247	22.6641	23.5035	24.3429	25.1823	26.0217	26.8611	27.7005	28.5399	29.3794	30.2188	31.0582	31.8976
708	.8248	.6642	.5036	.3431	.1825	.0219	.8613	.7007	.5401	.3796	.2190	.0584	.8978
711	.8250	.6644	.5038	.3432	.1827	.0221	.8615	.7009	.5403	.3798	.2192	.0586	.8980
714	.8251	.6646	.5040	.3434	.1828	.0223	.8617	.7011	.5406	.3800	.2194	.0588	.8983
717	.8253	.6647	.5042	.3436	.1830	.0225	.8619	.7013	.5408	.3802	.2196	.0591	.8985
419720	21.8254	22.6649	23.5043	24.3438	25.1832	26.0226	26.8621	27.7015	28.5410	29.3804	30.2198	31.0593	31.8987
723	.8256	.6650	.5045	.3439	.1834	.0228	.8623	.7017	.5412	.3806	.2201	.0595	.8989
726	.8258	.6652	.5047	.3441	.1836	.0230	.8625	.7019	.5414	.3808	.2203	.0597	.8992
729	.8259	.6654	.5048	.3443	.1837	.0232	.8627	.7021	.5416	.3810	.2205	.0599	.8994
732	.8261	.6655	.5050	.3445	.1839	.0234	.8628	.7023	.5418	.3812	.2207	.0602	.8996
419735	21.8262	22.6657	23.5052	24.3446	25.1841	26.0236	26.8630	27.7025	28.5420	29.3815	30.2209	31.0604	31.8999
738	.8264	.6659	.5053	.3448	.1843	.0238	.8632	.7027	.5422	.3817	.2211	.0606	.9001
741	.8265	.6660	.5055	.3450	.1845	.0239	.8634	.7029	.5424	.3819	.2214	.0608	.9003
744	.8267	.6662	.5057	.3452	.1846	.0241	.8636	.7031	.5426	.3821	.2216	.0611	.9005
747	.8268	.6663	.5058	.3453	.1848	.0243	.8638	.7033	.5428	.3823	.2218	.0613	.9008
419750	21.8270	22.6665	23.5060	24.3455	25.1850	26.0245	26.8640	27.7035	28.5430	29.3825	30.2220	31.0615	31.9010
753	.8272	.6667	.5062	.3457	.1852	.0247	.8642	.7037	.5432	.3827	.2222	.0617	.9012
756	.8273	.6668	.5063	.3458	.1854	.0249	.8644	.7039	.5434	.3829	.2224	.0619	.9015
759	.8275	.6670	.5065	.3460	.1855	.0251	.8646	.7041	.5436	.3831	.2226	.0622	.9017
762	.8276	.6671	.5067	.3462	.1857	.0252	.8648	.7043	.5438	.3833	.2229	.0624	.9019
419765	21.8278	22.6673	23.5068	24.3464	25.1859	26.0254	26.8650	27.7045	28.5440	29.3836	30.2231	31.0626	31.9021
768	.8279	.6675	.5070	.3465	.1861	.0256	.8652	.7047	.5442	.3838	.2233	.0628	.9024
771	.8281	.6676	.5072	.3467	.1863	.0258	.8653	.7049	.5444	.3840	.2235	.0631	.9026
774	.8282	.6678	.5073	.3469	.1864	.0260	.8655	.7051	.5446	.3842	.2237	.0633	9028
777	.8284	.6680	.5075	.3471	.1866	.0262	.8657	.7053	.5448	.3844	.2239	.0635	.9031
419780	21.8286	22.6681	23.5077	24 3472	25.1868	26.0264	26.8659	27.7055	28.5450	29.3846	30.2242	31.0637	31.9033
783	.8287	.6683	.5078	.3474	.1870	.0265	.8661	.7057	.5452	.3848	.2244	.0639	.9035
786	.8289	.6684	.5080	.3476	.1872	.0267	.8663	.7059	.5454	.3850	.2246	.0642	.9037
789	.8290	.6686	.5082	.3478	.1873	.0269	.8665	.7061	.5457	.3852	.2248	.0644	.9040
792	.8292	.6688	.5084	.3479	.1875	.0271	.8667	.7063	.5459	.3854	.2250	.0646	.9042
419795	21.8293	22.6689	23.5085	24.3481	25.1877	26.0273	26.8669	27.7065	28.5461	29.3857	30.2252	31.0648	31.9044
798	.8295	.6691	.5087	.3483	.1879	.0275	.8671	.7067	.5463	.3859	.2255	.0651	.9046
801	.8297	.6693	.5089	.3485	.1881	.0277	.8673	.7069	.5465	.3861	.2257	.0653	.9049
804	.8298	.6694	.5090	.3486	.1882	.0278	.8675	.7071	.5467	.3863	.2259	.0655	.9051
807	.8300	.6696	.5092	.3488	.1884	.0280	.8676	.7073	.5469	.3865	.2261	.0657	.9053
419810	21.8301	22.6697	23.5094	24.3490	25.1886	26.0282	26.8678	27.7075	28.5471	29.3867	30.2263	31.0659	31.9056
813	.8303	.6699	.5095	.3492	.1888	.0284	.8680	.7077	.5473	.3869	.2265	.0662	.9058
816	.8304	.6701	.5097	.3493	.1890	.0286	.8682	.7079	.5475	.3871	.2268	.0664	.9060
819	.8306	.6702	.5099	.3495	.1891	.0288	.8684	.7081	.5477	.3873	.2270	.0666	.9062
822	.8307	.6704	.5100	.3497	.1893	.0290	.8686	.7083	.5479	.3875	.2272	.0668	.9065
419825	21.8309	22.6706	23.5102	24.3499	25.1895	26.0292	26.8688	27.7085	28.5481	29.3878	30.2274	31.0671	31.9067
828	.8311	.6707	.5104	.3500	.1897	.0293	.8690	.7086	.5483	.3880	.2276	.0673	.9069
831	.8312	.6709	.5105	.3502	.1899	.0295	.8692	.7088	.5485	.3882	.2278	.0675	.9072
834	.8314	.6710	.5107	.3504	.1900	.0297	.8694	.7090	.5487	.3884	.2280	.0677	.9074
837	.8315	.6712	.5109	.3505	.1902	.0299	.8696	.7092	.5489	.3886	.2283	.0679	.9076
419840	21.8317	22.6714	23.5110	24.3507	25.1904	26.0301	26.8698	27.7094	28.5491	29.3888	30.2285	31.0682	31.9078
843	.8318	.6715	.5112	.3509	.1906	.0303	.8700	.7096	.5493	.3890	.2287	.0684	.9081
846	.8320	.6717	.5114	.3511	.1908	.0305	.8701	.7098	.5495	.3892	.2289	.0686	.9083
849	.8321	.6718	.5115	.3512	.1909	.0306	.8703	.7100	.5497	.3894	.2291	.0688	.9085
852	.8323	.6720	.5117	.3514	.1911	.0308	.8705	.7102	.5499	.3896	.2293	.0690	.9088
419855	21.8325	22.6722	23.5119	24.3516	25.1913	26.0310	26.8707	27.7104	28.5501	29.3899	30.2296	31.0693	31.9090
858	.8326	.6723	.5120	.3518	.1915	.0312	.8709	.7106	.5503	.3901	.2298	.0695	.9092
861	.8328	.6725	.5122	.3519	.1917	.0314	.8711	.7108	.5505	.3903	.2300	.0697	.9094
864	.8329	.6727	.5124	.3521	.1918	.0316	.8713	.7110	.5508	.3905	.2302	.0699	.9097
867	.8331	.6728	.5126	.3523	.1920	.0318	.8715	.7112	.5510	.3907	.2304	.0702	.9099
419870	21.8332	22.6730	23.5127	24.3525	25.1922	26.0319	26.8717	27.7114	28.5512	29.3909	30.2306	31.0704	31.9101
873	.8334	.6731	.5129	.3526	.1924	.0321	.8719	.7116	.5514	.3911	.2309	.0706	.9103
876	.8336	.6733	.5131	.3528	.1926	.0323	.8721	.7118	.5516	.3913	.2311	.0708	.9106
879	.8337	.6735	.5132	.3530	.1927	.0325	.8723	.7120	.5518	.3915	.2313	.0710	.9108
882	.8339	.6736	.5134	.3532	.1929	.0327	.8724	.7122	.5520	.3917	.2315	.0713	.9110
419885	21.8340	22.6738	23.5136	24.3533	25.1931	26.0329	26.8726	27.7124	28.5522	29.3920	30.2317	31.0715	31.9113
888	.8342	.6740	.5137	.3535	.1933	.0331	.8728	.7126	.5524	.3922	.2319	.0717	.9115
891	.8343	.6741	.5139	.3537	.1935	.0332	.8730	.7128	.5526	.3924	.2322	.0719	.9116
894	.8345	.6743	.5141	.3539	.1936	.0334	.8732	.7130	.5528	.3926	.2324	.0722	.9117
897	.8346	.6744	.5142	.3540	.1938	.0336	.8734	.7132	.5530	.3928	.2326	.0724	.9123
419900	21.8348	22.6746	23.5144	24.3542	25.1940	26.0338	26.8736	27.7134	28.5532	29.3930	30.2328	31.0726	31.9124

MEGACYCLES PER SECOND

H A R M O N I C S

BASIC FREQ.	78	80	82	84	86	88	90	92	94	96	100	104	108
419600	32.7288	33.5680	34.4072	35.2464	36.0856	36.9248	37.7640	38.6032	39.4424	40.2816	41.9600	43.6384	45.3168
603	.7290	.5682	.4074	.2467	.0859	.9251	.7643	.6035	.4427	.2819	.9603	.6387	.3171
606	.7293	.5685	.4077	.2469	.0861	.9253	.7645	.6038	.4430	.2822	.9606	.6390	.3174
609	.7295	.5687	.4079	.2472	.0864	.9256	.7648	.6040	.4432	.2825	.9609	.6393	.3178
612	.7297	.5690	.4082	.2474	.0866	.9259	.7651	.6043	.4435	.2828	.9612	.6396	.3181
419615	32.7300	33.5692	34.4084	35.2477	36.0869	36.9261	37.7654	38.6046	39.4438	40.2830	41.9615	43.6400	45.3184
618	.7302	.5694	.4087	.2479	.0871	.9264	.7656	.6049	.4441	.2833	.9618	.6403	.3187
621	.7304	.5697	.4089	.2482	.0874	.9266	.7659	.6051	.4444	.2836	.9621	.6406	.3191
624	.7307	.5699	.4092	.2484	.0877	.9269	.7662	.6054	.4447	.2839	.9624	.6409	.3194
627	.7309	.5702	.4094	.2487	.0879	.9272	.7664	.6057	.4449	.2842	.9627	.6412	.3197
419630	32.7311	33.5704	34.4097	35.2489	36.0882	36.9274	37.7667	38.6060	39.4452	40.2845	41.9630	43.6415	45.5200
633	.7314	.5706	.4099	.2492	.0884	.9277	.7670	.6062	.4455	.2848	.9633	.6418	.3204
636	.7316	.5709	.4102	.2494	.0887	.9280	.7672	.6065	.4458	.2851	.9636	.6421	.3207
639	.7318	.5711	.4104	.2497	.0890	.9282	.7675	.6068	.4461	.2853	.9639	.6425	.3210
642	.7321	.5714	.4106	.2499	.0892	.9285	.7678	.6071	.4463	.2856	.9642	.6428	.3213
419645	32.7323	33.5716	34.4109	35.2502	36.0895	36.9288	37.7681	38.6073	39.4466	40.2859	41.9645	43.6431	45.3217
648	.7325	.5718	.4111	.2504	.0897	.9290	.7683	.6076	.4469	.2862	.9648	.6434	.3220
651	.7328	.5721	.4114	.2507	.0900	.9293	.7686	.6079	.4472	.2865	.9651	.6437	.3223
654	.7330	.5723	.4116	.2509	.0902	.9296	.7689	.6082	.4475	.2868	.9654	.6440	.3226
657	.7332	.5726	.4119	.2512	.0905	.9298	.7691	.6084	.4478	.2871	.9657	.6443	.3230
419660	32.7335	33.5728	34.4121	35.2514	36.0908	36.9301	37.7694	38.6087	39.4480	40.2874	41.9660	43.6446	45.3233
663	.7337	.5730	.4124	.2517	.0910	.9303	.7697	.6090	.4483	.2876	.9663	.6450	.3236
666	.7339	.5733	.4126	.2519	.0913	.9306	.7699	.6093	.4486	.2879	.9666	.6453	.3239
669	.7342	.5735	.4129	.2522	.0915	.9309	.7702	.6095	.4489	.2882	.9669	.6456	.3243
672	.7344	.5738	.4131	.2524	.0918	.9311	.7705	.6098	.4492	.2885	.9672	.6459	.3246
419675	32.7347	33.5740	34.4134	35.2527	36.0921	36.9314	37.7708	38.6101	39.4495	40.2888	41.9675	43.6462	45.3249
678	.7349	.5742	.4136	.2530	.0923	.9317	.7710	.6104	.4497	.2891	.9678	.6465	.3252
681	.7351	.5745	.4138	.2532	.0926	.9319	.7713	.6107	.4500	.2894	.9681	.6468	.3255
684	.7354	.5747	.4141	.2535	.0928	.9322	.7716	.6109	.4503	.2897	.9684	.6471	.3259
687	.7356	.5750	.4143	.2537	.0931	.9325	.7718	.6112	.4506	.2900	.9687	.6474	.3262
419690	32.7358	33.5752	34.4146	35.2540	36.0933	36.9327	37.7721	38.6115	39.4509	40.2902	41.9690	43.6478	45.3265
693	.7361	.5754	.4148	.2542	.0936	.9330	.7724	.6118	.4511	.2905	.9693	.6481	.3268
696	.7363	.5757	.4151	.2545	.0939	.9332	.7726	.6120	.4514	.2908	.9696	.6484	.3272
699	.7365	.5759	.4153	.2547	.0941	.9335	.7729	.6123	.4517	.2911	.9699	.6487	.3275
702	.7368	.5762	.4156	.2550	.0944	.9338	.7732	.6126	.4520	.2914	.9702	.6490	.3278
419705	32.7370	33.5764	34.4158	35.2552	36.0946	36.9340	37.7735	38.6129	39.4523	40.2917	41.9705	43.6493	45.3281
708	.7372	.5766	.4161	.2555	.0949	.9343	.7737	.6131	.4526	.2920	.9708	.6496	.3285
711	.7375	.5769	.4163	.2557	.0951	.9346	.7740	.6134	.4528	.2923	.9711	.6499	.3288
714	.7377	.5771	.4165	.2560	.0954	.9348	.7743	.6137	.4531	.2925	.9714	.6503	.3291
717	.7379	.5774	.4168	.2562	.0957	.9351	.7745	.6140	.4534	.2928	.9717	.6506	.3294
419720	32.7382	33.5776	34.4170	35.2565	36.0959	36.9354	37.7748	38.6142	39.4537	40.2931	41.9720	43.6509	45.3298
723	.7384	.5778	.4173	.2567	.0962	.9356	.7751	.6145	.4540	.2934	.9723	.6512	.3301
726	.7386	.5781	.4175	.2570	.0964	.9359	.7753	.6148	.4542	.2937	.9726	.6515	.3304
729	.7389	.5783	.4178	.2572	.0967	.9362	.7756	.6151	.4545	.2940	.9729	.6518	.3307
732	.7391	.5786	.4180	.2575	.0970	.9364	.7759	.6153	.4548	.2943	.9732	.6521	.3311
419735	32.7393	33.5788	34.4183	35.2577	36.0972	36.9367	37.7762	38.6156	39.4551	40.2946	41.9735	43.6524	45.3314
738	.7396	.5790	.4185	.2580	.0975	.9369	.7764	.6159	.4554	.2948	.9738	.6528	.3317
741	.7398	.5793	.4188	.2582	.0977	.9372	.7767	.6162	.4557	.2951	.9741	.6531	.3320
744	.7400	.5795	.4190	.2585	.0980	.9375	.7770	.6164	.4559	.2954	.9744	.6534	.3324
747	.7403	.5798	.4193	.2587	.0982	.9377	.7772	.6167	.4562	.2957	.9747	.6537	.3327
419750	32.7405	33.5800	34.4195	35.2590	36.0985	36.9380	37.7775	38.6170	39.4565	40.2960	41.9750	43.6540	45.3330
753	.7407	.5802	.4197	.2593	.0988	.9383	.7778	.6173	.4568	.2963	.9753	.6543	.3333
756	.7410	.5805	.4200	.2595	.0990	.9385	.7780	.6176	.4571	.2966	.9756	.6546	.3336
759	.7412	.5807	.4202	.2598	.0993	.9388	.7783	.6178	.4573	.2969	.9759	.6549	.3340
762	.7414	.5810	.4205	.2600	.0995	.9391	.7786	.6181	.4576	.2972	.9762	.6552	.3343
419765	32.7417	33.5812	34.4207	35.2603	36.0998	36.9393	37.7789	38.6184	39.4579	40.2974	41.9765	43.6556	45.3346
768	.7419	.5814	.4210	.2605	.1000	.9396	.7791	.6187	.4582	.2977	.9768	.6559	.3349
771	.7421	.5817	.4212	.2608	.1003	.9398	.7794	.6189	.4585	.2980	.9771	.6562	.3353
774	.7424	.5819	.4215	.2610	.1006	.9401	.7797	.6192	.4588	.2983	.9774	.6565	.3356
777	.7426	.5822	.4217	.2613	.1008	.9404	.7799	.6195	.4590	.2986	.9777	.6568	.3359
419780	32.7[illegible]28	33.5824	34.4220	35.2615	36.1011	36.9406	37.7802	38.6198	39.4593	40.2989	41.9780	43.6571	45.3362
783	.7431	.5826	.4222	.2618	.1013	.9409	.7805	.6200	.4596	.2992	.9783	.6574	.3366
786	.7433	.5829	.4225	.2620	.1016	.9412	.7807	.6203	.4599	.2995	.9786	.6577	.3369
789	.7435	.5831	.4227	.2623	.1019	.9414	.7810	.6206	.4602	.2997	.9789	.6581	.3372
792	.7438	.5834	.4229	.2625	.1021	.9417	.7813	.6209	.4604	.3000	.9792	.6584	.3375
419795	32.7440	33.5836	34.4232	35.2628	36.1024	36.9420	37.7816	38.6211	39.4607	40.3003	41.9795	43.6587	45.3379
798	.7442	.5838	.4234	.2630	.1026	.9422	.7818	.6214	.4610	.3006	.9798	.6590	.3382
801	.7445	.5841	.4237	.2633	.1029	.9425	.7821	.6217	.4613	.3009	.9801	.6593	.3385
804	.7447	.5843	.4239	.2635	.1031	.9428	.7824	.6220	.4616	.3012	.9804	.6596	.3388
807	.7449	.5846	.4242	.2638	.1034	.9430	.7826	.6222	.4619	.3015	.9807	.6599	.3392
419810	32.7452	33.5848	34.4244	35.2640	36.1037	36.9433	37.7829	38.6225	39.4621	40.3018	41.9810	43.6602	45.3395
813	.7454	.5850	.4247	.2643	.1039	.9435	.7832	.6228	.4624	.3020	.9813	.6606	.3398
816	.7456	.5853	.4249	.2645	.1042	.9438	.7834	.6231	.4627	.3023	.9816	.6609	.3401
819	.7459	.5855	.4252	.2648	.1044	.9441	.7837	.6233	.4630	.3026	.9819	.6612	.3405
822	.7461	.5858	.4254	.2650	.1047	.9443	.7840	.6236	.4633	.3029	.9822	.6615	.3408
419825	32.7464	33.5860	34.4257	35.2653	36.1050	36.9446	37.7843	38.6239	39.4636	40.3032	41.9825	43.6618	45.3411
828	.7466	.5862	.4259	.2656	.1052	.9449	.7845	.6242	.4638	.3035	.9828	.6621	.3414
831	.7468	.5865	.4261	.2658	.1055	.9451	.7848	.6245	.4641	.3038	.9831	.6624	.3417
834	.7471	.5867	.4264	.2661	.1057	.9454	.7851	.6247	.4644	.3041	.9834	.6627	.3421
837	.7473	.5870	.4266	.2663	.1060	.9457	.7853	.6250	.4647	.3044	.9837	.6630	.3424
419840	32.7475	33.5872	34.4269	35.2666	36.1062	36.9459	37.7856	38.6253	39.4650	40.3046	41.9840	43.6634	45.3427
843	.7478	.5874	.4271	.2668	.1065	.9462	.7859	.6256	.4652	.3049	.9843	.6637	.3430
846	.7480	.5877	.4274	.2671	.1068	.9464	.7861	.6258	.4655	.3052	.9846	.6640	.3434
849	.7482	.5879	.4276	.2673	.1070	.9467	.7864	.6261	.4658	.3055	.9849	.6643	.3437
852	.7485	.5882	.4279	.2676	.1073	.9470	.7867	.6264	.4661	.3058	.9852	.6646	.3440
419855	32.7487	33.5884	34.4281	35.2678	36.1075	36.9472	37.7870	38.6267	39.4664	40.3061	41.9855	43.6649	45.3443
858	.7489	.5886	.4284	.2681	.1078	.9475	.7872	.6269	.4667	.3064	.9858	.6652	.3447
861	.7492	.5889	.4286	.2683	.1080	.9478	.7875	.6272	.4669	.3067	.9861	.6655	.3450
864	.7494	.5891	.4288	.2686	.1083	.9480	.7878	.6275	.4672	.3069	.9864	.6659	.3453
867	.7496	.5894	.4291	.2688	.1086	.9483	.7880	.6278	.4675	.3072	.9867	.6662	.3456
419870	32.7499	33.5998	34.4293	35.2691	36.1088	36.9486	37.7883	38.6280	39.4678	40.3075	41.9870	43.6665	45.3460
873	.7501	.5898	.4296	.2693	.1091	.9488	.7886	.6283	.4681	.3078	.9873	.6668	.3463
876	.7503	.5901	.4298	.2696	.1093	.9491	.7888	.6286	.4683	.3081	.9876	.6671	.3466
879	.7506	.5903	.4301	.2698	.1096	.9494	.7891	.6289	.4686	.3084	.9879	.6674	.3469
882	.7508	.5906	.4303	.2701	.1099	.9496	.7894	.6291	.4689	.3087	.9882	.6677	.3473
419885	32.7510	33.5908	34.4306	35.2703	36.1101	36.9499	37.7897	38.6294	39.4692	40.3090	41.9885	43.6680	45.3476
888	.7513	.5910	.4308	.2706	.1104	.9501	.7899	.6297	.4695	.3092	.9888	.6684	.3479
891	.7515	.5913	.4311	.2708	.1106	.9504	.7902	.6300	.4698	.3095	.9891	.6687	.3482
894	.7517	.5915	.4313	.2711	.1109	.9507	.7905	.6302	.4700	.3098	.9894	.6690	.3486
897	.7520	.5918	.4316	.2713	.1111	.9509	.7907	.6305	.4703	.3101	.9897	.6693	.3489
419900	32.7522	33.5920	34.4318	35.2716	36.1114	36.9512	37.7910	38.6308	39.4706	40.3104	41.9900	43.6696	45.3492

H A R M O N I C S

BASIC FREQ.	52	54	56	58	60	62	64	66	68	70	72	74	76
419900	21.8348	22.6746	23.5144	24.3542	25.1940	26.0338	26.8736	27.7134	28.5532	29.3930	30.2328	31.0726	31.9124
903	.8350	.6748	.5146	.3544	.1942	.0340	.8738	.7136	.5534	.3932	.2330	.0728	.9126
906	.8351	.6749	.5147	.3545	.1944	.0342	.8740	.7138	.5536	.3934	.2332	.0730	.9129
909	.8353	.6751	.5149	.3547	.1945	.0344	.8742	.7140	.5538	.3936	.2334	.0733	.9131
912	.8354	.6752	.5151	.3549	.1947	.0345	.8744	.7142	.5540	.3938	.2337	.0735	.9133
419915	21.8356	22.6754	23.5152	24.3551	25.1949	26.0347	26.8746	27.7144	28.5542	29.3941	30.2339	31.0737	31.9135
918	.8357	.6756	.5154	.3552	.1951	.0349	.8748	.7146	.5544	.3943	.2341	.0739	.9138
921	.8359	.6757	.5156	.3554	.1953	.0351	.8749	.7148	.5546	.3945	.2343	.0742	.9140
924	.8360	.6759	.5157	.3556	.1954	.0353	.8751	.7150	.5548	.3947	.2345	.0744	.9142
927	.8362	.6761	.5159	.3558	.1956	.0355	.8753	.7152	.5550	.3949	.2347	.0746	.9145
419930	21.8364	22.6762	23.5161	24.3559	25.1958	26.0357	26.8755	27.7154	28.5552	29.3951	30.2350	31.0748	31.9147
933	.8365	.6764	.5162	.3561	.1960	.0358	.8757	.7156	.5554	.3953	.2352	.0750	.9149
936	.8367	.6765	.5164	.3563	.1962	.0360	.8759	.7158	.5556	.3955	.2354	.0753	.9151
939	.8368	.6767	.5166	.3565	.1963	.0362	.8761	.7160	.5559	.3957	.2356	.0755	.9154
942	.8370	.6769	.5168	.3566	.1965	.0364	.8763	.7162	.5561	.3959	.2358	.0757	.9156
419945	21.8371	22.6770	23.5169	24.3568	25.1967	26.0366	26.8765	27.7164	28.5563	39.2962	30.2360	31.0759	31.9158
948	.8373	.6772	.5171	.3570	.1969	.0368	.8767	.7166	.5565	.3964	.2363	.0762	.9160
951	.8375	.6774	.5173	.3572	.1971	.0370	.8769	.7168	.5567	.3966	.2365	.0764	.9163
954	.8376	.6775	.5174	.3573	.1972	.0371	.8771	.7170	.5569	.3968	.2367	.0766	.9165
957	.8378	.6777	.5176	.3575	.1974	.0373	.8772	.7172	.5571	.3970	.2369	.0768	.9167
419960	21.8379	22.6778	23.5178	24.3577	25.1976	26.0375	26.8774	27.7174	28.5573	29.3972	30.2371	31.0770	31.9170
963	.8381	.6780	.5179	.3579	.1978	.0377	.8776	.7176	.5575	.3974	.2373	.0773	.9172
966	.8382	.6782	.5181	.3580	.1980	.0379	.8778	.7178	.5577	.3976	.2376	.0775	.9174
969	.8384	.6783	.5183	.3582	.1981	.0381	.8780	.7180	.5579	.3978	.2378	.0777	.9176
972	.8385	.6785	.5184	.3584	.1983	.0383	.8782	.7182	.5581	.3980	.2380	.0779	.9179
419975	21.8387	22.6787	23.5186	24.3586	25.1985	26.0385	26.8784	27.7184	28.5583	29.3983	30.2382	31.0782	31.9181
978	.8389	.6788	.5188	.3587	.1987	.0386	.8786	.7185	.5585	.3985	.2384	.0784	.9183
981	.8390	.6790	.5189	.3589	.1989	.0388	.8788	.7187	.5587	.3987	.2386	.0786	.9186
984	.8392	.6791	.5191	.3591	.1990	.0390	.8790	.7189	.5589	.3989	.2388	.0788	.9188
987	.8393	.6793	.5193	.3592	.1992	.0392	.8792	.7191	.5591	.3991	.2391	.0790	.9190
419990	21.8395	22.6795	23.5194	24.3594	25.1994	26.0394	26.8794	27.7193	28.5593	29.3993	30.2393	31.0793	31.9192
993	.8396	.6796	.5196	.3596	.1996	.0396	.8796	.7195	.5595	.3995	.2395	.0795	.3195
996	.8398	.6798	.5198	.3598	.1998	.0398	.8797	.7197	.5597	.3997	.2397	.0797	.9197
999	.8399	.6799	.5199	.3599	.1999	.0399	.8799	.7199	.5599	.3999	.2399	.0799	.9199
420002	.8401	.6801	.5201	.3601	.2001	.0401	.8801	.7201	.5601	.4001	.2401	.0801	.9202
420005	21.8403	22.6803	23.5203	24.3603	25.2003	26.0403	26.8803	27.7203	28.5603	29.4004	30.2404	31.0804	31.9204
008	.8404	.6804	.5204	.3605	.2005	.0405	.8805	.7205	.5605	.4006	.2406	.0806	.9206
011	.8406	.6806	.5206	.3606	.2007	.0407	.8807	.7207	.5607	.4008	.2408	.0808	.9208
014	.8407	.6808	.5208	.3608	.2008	.0409	.8809	.7209	.5610	.4010	.2410	.0810	.9211
017	.8409	.6809	.5210	.3610	.2010	.0411	.8811	.7211	.5612	.4012	.2412	.0813	.9213
420020	21.8410	22.6811	23.5211	24.3612	25.2012	26.0412	26.8813	27.7213	28.5614	29.4014	30.2414	31.0815	31.9215
023	.8412	.6812	.5213	.3613	.2014	.0414	.8815	.7215	.5616	.4016	.2417	.0817	.9217
026	.8414	.6814	.5215	.3615	.2016	.0416	.8817	.7217	.5618	.4018	.2419	.0819	.9220
029	.8415	.6816	.5216	.3617	.2017	.0418	.8819	.7219	.5620	.4020	.2421	.0821	.9222
032	.8417	.6817	.5218	.3619	.2019	.0420	.8820	.7221	.5622	.4022	.2423	.0824	.9224
420035	21.8418	22.6819	23.5220	24.3620	25.2021	26.0422	26.8822	27.7223	28.5624	29.4025	30.2425	31.0826	31.9227
038	.8420	.6821	.5221	.3622	.2023	.0424	.8824	.7225	.5626	.4027	.2427	.0828	.9229
041	.8421	.6822	.5223	.3624	.2025	.0425	.8826	.7227	.5628	.4029	.2430	.0830	.9231
044	.8423	.6824	.5225	.3626	.2026	.0427	.8828	.7229	.5630	.4031	.2432	.0833	.9233
047	.8424	.6825	.5226	.3627	.2028	.0429	.8830	.7231	.5632	.4033	.2434	.0835	.9236
420050	21.8426	22.6827	23.5228	24.3629	25.2030	26.0431	26.8832	27.7233	28.5634	29.4035	30.2436	31.0837	31.9238
053	.8428	.6829	.5230	.3631	.2032	.0433	.8834	.7235	.5636	.4037	.2438	.0839	.9240
056	.8429	.6830	.5231	.3632	.2034	.0435	.8836	.7237	.5638	.4039	.2440	.0841	.9243
059	.8431	.6832	.5233	.3634	.2035	.0437	.8838	.7239	.5640	.4041	.2442	.0844	.9245
062	.8432	.6833	.5235	.3636	.2037	.0438	.8840	.7241	.5642	.4043	.2445	.0846	.9247
420065	21.8434	22.6835	23.5236	24.3638	25.2039	26.0440	26.8842	27.7243	28.5644	29.4046	30.2447	31.0848	31.9249
068	.8435	.6837	.5238	.3639	.2041	.0442	.8844	.7245	.5646	.4048	.2449	.0850	.9252
071	.8437	.6838	.5240	.3641	.2043	.0444	.8845	.7247	.5648	.4050	.2451	.0853	.9254
074	.8438	.6840	.5241	.3643	.2044	.0446	.8847	.7249	.5650	.4052	.2453	.0855	.9256
077	.8440	.6842	.5243	.3645	.2046	.0448	.8849	.7251	.5652	.4054	.2455	.0857	.9259
420080	21.8442	22.6843	23.5245	24.3646	25.2048	26.0450	26.8851	27.7253	28.5654	29.4056	30.2458	31.0859	31.9261
083	.8443	.6845	.5246	.3648	.2050	.0451	.8853	.7255	.5656	.4058	.2460	.0861	.9263
086	.8445	.6846	.5248	.3650	.2052	.0453	.8855	.7257	.5658	.4060	.2462	.0864	.9265
089	.8446	.6848	.5250	.3652	.2053	.0455	.8857	.7259	.5661	.4062	.2464	.0866	.9268
092	.8448	.6850	.5252	.3653	.2055	.0457	.8859	.7261	.5663	.4064	.2466	.0868	.9270
420095	21.8449	22.6851	23.5253	24.3655	25.2057	26.0459	26.8861	27.7263	28.5665	29.4067	30.2468	31.0870	31.9272
098	.8451	.6853	.5255	.3657	.2059	.0461	.8863	.7265	.5667	.4069	.2471	.0873	.9274
101	.8453	.6855	.5257	.3659	.2061	.0463	.8865	.7267	.5669	.4071	.2473	.0875	.9277
104	.8454	.6856	.5258	.3660	.2062	.0464	.8867	.7269	.5671	.4073	.2475	.0877	.9279
107	.8456	.6858	.5260	.3662	.2064	.0466	.8868	.7271	.5673	.4075	.2477	.0879	.9281
420110	21.8457	22.6859	23.5262	24.3664	25.2066	26.0468	26.8870	27.7273	28.5675	29.4077	30.2479	31.0881	31.9284
113	.8459	.6861	.5263	.3666	.2068	.0470	.8872	.7275	.5677	.4079	.2481	.0884	.9286
116	.8460	.6863	.5265	.3667	.2070	.0472	.8874	.7277	.5679	.4081	.2484	.0886	.9288
119	.8462	.6864	.5267	.3669	.2071	.0474	.8876	.7279	.5681	.4083	.2486	.0888	.9290
122	.8463	.6866	.5268	.3671	.2073	.0476	.8878	.7281	.5683	.4085	.2488	.0890	.9293
420125	21.8465	22.6868	23.5270	24.3673	25.2075	26.0478	26.8880	27.7283	28.5685	29.4088	30.2490	31.0893	31.9295
128	.8467	.6869	.5272	.3674	.2077	.0479	.8882	.7284	.5687	.4090	.2492	.0895	.9297
131	.8468	.6871	.5273	.3676	.2079	.0481	.8884	.7286	.5689	.4092	.2494	.0897	.9300
134	.8470	.6872	.5275	.3678	.2080	.0483	.8886	.7288	.5691	.4094	.2496	.0899	.9302
137	.8471	.6874	.5277	.3679	.2082	.0485	.8888	.7290	.5693	.4096	.2499	.0901	.9304
420140	21.8473	22.6876	23.5278	24.3681	25.2084	26.0487	26.8890	27.7292	28.5695	29.4098	30.2501	31.0904	31.9306
143	.8474	.6877	.5280	.3683	.2086	.0489	.8892	.7294	.5697	.4100	.2503	.0906	.9309
146	.8476	.6879	.5282	.3685	.2088	.0491	.8893	.7296	.5699	.4102	.2505	.0908	.9311
149	.8477	.6880	.5283	.3686	.2089	.0492	.8895	.7298	.5701	.4104	.2507	.0910	.9313
152	.8479	.6882	.5285	.3688	.2091	.0494	.8897	.7300	.5703	.4106	.2509	.0912	.9316
420155	21.8481	22.6884	23.5287	24.3690	25.2093	26.0496	26.8899	27.7302	28.5705	29.4109	30.2512	31.0915	31.9318
158	.8482	.6885	.5288	.3692	.2095	.0498	.8901	.7304	.5707	.4111	.2514	.0917	.9320
161	.8484	.6887	.5290	.3693	.2097	.0500	.8903	.7306	.5709	.4113	.2516	.0919	.9322
164	.8485	.6889	.5292	.3695	.2098	.0502	.8905	.7308	.5712	.4115	.2518	.0921	.9325
167	.8487	.6890	.5294	.3697	.2100	.0504	.8907	.7310	.5714	.4117	.2520	.0924	.9327
420170	21.8488	22.6892	23.5295	24.3699	25.2102	26.0505	26.8909	27.7312	28.5716	29.4119	30.2522	31.0926	31.9329
173	.8490	.6893	.5297	.3700	.2104	.0507	.8911	.7314	.5718	.4121	.2525	.0928	.9331
176	.8492	.6895	.5299	.3702	.2106	.0509	.8913	.7316	.5720	.4123	.2527	.0930	.9334
179	.8493	.6897	.5300	.3704	.2107	.0511	.8915	.7318	.5722	.4125	.2529	.0932	.9336
182	.8495	.6898	.5302	.3706	.2109	.0513	.8916	.7320	.5724	.4127	.2531	.0935	.9338
420185	21.8496	22.6900	23.5304	24.3707	25.2111	26.0515	26.8918	27.7322	28.5726	29.4130	30.2533	31.0937	31.9341
188	.8498	.6902	.5305	3709	.2113	.0517	.8920	.7324	.5728	.4132	.2535	.0939	.9343
191	.8499	.6903	.5307	.3711	.2115	.0518	.8922	.7326	.5730	.4134	.2538	.0941	.9345
194	.8501	.6905	.5309	.3713	.2116	.0520	.8924	.7328	.5732	.4136	.2540	.0944	.9347
197	.8502	.6906	.5310	.3714	.2118	.0522	.8926	.7330	.5734	.4138	.2542	.0946	.9350
420200	21.8504	22.6908	23.5312	24.3716	25.2120	26.0524	26.8928	27.7332	28.5736	29.4140	30.2544	31.0948	31.9352

MEGACYCLES PER SECOND

HARMONICS

BASIC FREQ.	78	80	82	84	86	88	90	92	94	96	100	104	108
419900	32.7522	33.5920	34.4318	35.2716	36.1114	36.9512	37.7910	38.6308	39.4706	40.3104	41.9900	43.6696	45.3492
903	.7524	.5922	.4320	.2719	.1117	.9515	.7913	.6311	.4709	.3107	.9903	.6699	.3495
906	.7527	.5925	.4323	.2721	.1119	.9517	.7915	.6314	.4712	.3110	.9906	.6702	.3498
909	.7529	.5927	.4325	.2724	.1122	.9520	.7918	.6316	.4714	.3113	.9909	.6705	.3502
912	.7531	.5930	.4328	.2726	.1124	.9523	.7921	.6319	.4717	.3116	.9912	.6708	.3505
419915	32.7534	33.5932	34.4330	35.2729	36.1127	36.9525	37.7924	38.6322	39.4720	40.3118	41.9915	43.6712	45.3508
918	.7536	.5934	.4333	.2731	.1129	.9528	.7926	.6325	.4723	.3121	.9918	.6715	.3511
921	.7538	.5937	.4335	.2734	.1132	.9530	.7929	.6327	.4726	.3124	.9921	.6718	.3515
924	.7541	.5939	.4338	.2736	.1135	.9533	.7932	.6330	.4729	.3127	.9924	.6721	.3518
927	.7543	.5942	.4340	.2739	.1137	.9536	.7934	.6333	.4731	.3130	.9927	.6724	.3521
419930	32.8545	33.5944	34.4343	35.2741	36.1140	36.9538	37.7937	38.6336	39.4734	40.3133	41.9930	43.6727	45.3524
933	.7548	.5946	.4345	.2744	.1142	.9541	.7940	.6338	.4737	.3136	.9933	.6730	.3528
936	.7550	.5949	.4348	.2746	.1145	.9544	.7942	.6341	.4740	.3139	.9936	.6733	.3531
939	.7552	.5951	.4350	.2749	.1148	.9546	.7945	.6344	.4743	.3141	.9939	.6737	.3534
942	.7555	.5954	.4352	.2751	.1150	.9549	.7948	.6347	.4745	.3144	.9942	.6740	.3537
419945	32.7557	33.5956	34.4355	35.2754	36.1153	36.9552	37.7951	38.6349	39.4748	40.3147	41.9945	43.6743	45.3541
948	.7559	.5958	.4357	.2756	.1155	.9554	.7953	.6352	.4751	.3150	.9948	.6746	.3544
951	.7562	.5961	.4360	.2759	.1158	.9557	.7956	.6355	.4754	.3153	.9951	.6749	.3547
954	.7564	.5963	.4362	.2761	.1160	.9560	.7959	.7358	.4757	.3156	.9954	.6752	.3550
957	.7566	.5966	.4365	.2764	.1163	.9562	.7961	.6360	.4760	.3159	.9957	.6755	.3554
419960	32.7569	33.5968	34.4367	35.2766	36.1166	36.9565	37.7964	38.6363	39.4762	40.3162	41.9960	43.6758	45.3557
963	.7571	.5970	.4370	.2769	.1168	.9567	.7967	.6366	.4765	.3164	.9963	.6762	.3560
966	.7573	.5973	.4372	.2771	.1171	.9570	.7969	.6369	.4768	.3167	.9966	.6765	.3563
969	.7576	.5975	.4375	.2774	.1173	.9573	.7972	.6371	.4771	.3170	.9969	.6768	.3567
972	.7578	.5978	.4377	.2776	.1176	.9575	.7975	.6374	.4774	.3173	.9972	.6771	.3570
419975	32.7581	33.5980	34.4380	35.2779	36.1179	36.9578	37.7978	38.6377	39.4777	40.3176	41.9975	43.6774	45.3573
978	.7583	.5982	.4382	.2782	.1181	.9581	.7980	.6380	.4779	.3179	.9978	.6777	.3576
981	.7585	.5985	.4384	.2784	.1184	.9583	.7983	.6383	.4782	.3182	.9981	.6780	.3579
984	.7588	.5987	.4387	.2787	.1186	.9586	.7986	.6385	.4785	.3185	.9984	.6783	.3583
987	.7590	.5990	.4389	.2789	.1189	.9589	.7988	.6388	.4788	.3188	.9987	.6786	.3586
419990	32.7592	33.5992	34.4392	35.2792	36.1191	36.9591	37.7991	38.6391	39.4791	40.3190	41.9990	43.6790	45.3589
993	.7595	.5994	.4394	.2794	.1194	.9594	.7994	.6394	.4793	.3193	.9993	.6793	.3592
996	.7597	.5997	.4397	.2797	.1197	.9596	.7996	.6396	.4796	.3196	.9996	.6796	.3596
999	.7599	.5999	.4399	.2799	.1199	.9599	.7999	.6399	.4799	.3199	.9999	.6799	.3599
420002	.7602	.6002	.4402	.2802	.1202	.9602	.8002	.6402	.4802	.3202	42.0002	.6802	.3602
420005	32.7604	33.6004	34.4404	35.2804	36.1204	36.9604	37.8005	38.6405	39.4805	40.3205	42.0005	43.6805	45.3605
008	.7606	.6006	.4407	.2807	.1207	.9607	.8007	.6407	.4808	.3208	.0008	.6808	.3609
011	.7609	.6009	.4409	.2809	.1209	.9610	.8010	.6410	.4810	.3211	.0011	.6811	.3612
014	.7611	.6011	.4411	.2812	.1212	.9612	.8013	.6413	.4813	.3213	.0014	.6815	.3615
017	.7613	.6014	.4414	.2814	.1215	.9615	.8015	.6416	.4816	.3216	.0017	.6818	.3618
420020	32.7616	33.6016	34.4416	35.2817	36.1217	36.9618	37.8018	38.6418	39.4819	40.3219	42.0020	43.6821	45.3622
023	.7618	.6018	.4419	.2819	.1220	.9620	.8021	.6421	.4822	.3222	.0023	.6824	.3625
026	.7620	.6021	.4421	.2822	.1222	.9623	.8023	.6424	.4824	.3225	.0026	.6827	.3628
029	.7623	.6023	.4424	.2824	.1225	.9626	.8026	.6427	.4827	.3228	.0029	.6830	.3631
032	.7625	.6026	.4426	.2827	.1228	.9628	.8029	.6429	.4830	.3231	.0032	.6833	.3635
420035	32.7627	33.6028	34.4429	35.2829	36.1230	36.9631	37.8032	38.6432	39.4833	40.3234	42.0035	43.6836	45.3638
038	.7630	.6030	.4431	.2832	.1233	.9633	.8034	.6435	.4836	.3236	.0038	.6840	.3641
041	.7632	.6033	.4434	.2834	.1235	.9636	.8037	.6438	.4839	.3239	.0041	.6843	.3644
044	.7634	.6035	.4436	.2837	.1238	.9639	.8040	.6440	.4841	.3242	.0044	.6846	.3648
047	.7637	.6038	.4439	.2839	.1240	.9641	.8042	.6443	.4844	.3245	.0047	.6849	.3651
420050	32.7639	33.6040	34.4441	35.2842	36.1243	36.9644	37.8045	38.6446	39.4847	40.3248	42.0050	43.6852	45.3654
053	.7641	.6042	.4443	.2845	.1246	.9647	.8048	.6449	.4850	.3251	.0053	.6855	.3657
056	.7644	.6045	.4446	.2847	.1248	.9649	.8050	.6452	.4853	.3254	.0056	.6858	.3660
059	.7646	.6047	.4448	.2850	.1251	.9652	.8053	.6454	.4855	.3257	.0059	.6861	.3664
062	.7648	.6050	.4451	.2852	.1253	.9655	.8056	.6457	.4858	.3260	.0062	.6864	.3667
420065	32.7651	33.6052	34.4453	35.2855	36.1256	36.9657	37.8059	38.6460	39.4861	40.3262	42.0065	43.6868	45.3670
068	.7653	.6054	.4456	.2857	.1258	.9660	.8061	.6463	.4864	.3265	.0068	.6871	.3673
071	.7655	.6057	.4458	.2860	.1261	.9662	.8064	.6465	.4867	.3268	.0071	.6874	.3677
074	.7658	.6059	.4461	.2862	.1264	.9665	.8067	.6468	.4870	.3271	.0074	.6877	.3680
077	.7660	.6062	.4463	.2865	.1266	.9668	.8069	.6471	.4872	.3274	.0077	.6880	.3683
420080	32.7662	33.6064	34.4466	35.2867	36.1269	36.9670	37.8072	38.6474	39.4875	40.3277	42.0080	43.6883	45.3686
083	.7665	.6066	.4468	.2870	.1271	.9673	.8075	.6476	.4878	.3280	.0083	.6886	.3690
086	.7667	.6069	.4471	.2872	.1274	.9676	.8077	.6479	.4881	.3283	.0086	.6889	.3693
089	.7669	.6071	.4473	.2875	.1277	.9678	.8080	.6482	.4884	.3285	.0089	.6893	.3696
092	.7672	.6074	.4475	.2877	.1279	.9681	.8083	.6485	.4886	.3288	.0092	.6896	.3699
420095	32.7674	33.6076	34.4478	35.2880	36.1282	36.9684	37.8086	38.6487	39.4889	40.3291	42.0095	43.6899	45.3703
098	.7676	.6078	.4480	.2882	.1284	.9686	.8088	.6490	.4892	.3294	.0098	.6902	.3706
101	.7679	.6081	.4483	.2885	.1287	.9689	.8091	.6493	.4895	.3297	.0101	.6905	.3709
104	.7681	.6083	.4485	.2887	.1289	.9692	.8094	.6496	.4898	.3300	.0104	.6908	.3712
107	.7683	.6086	.4488	.2890	.1292	.9694	.8096	.6498	.4901	.3303	.0107	.6911	.3716
420110	32.7686	33.6088	34.4490	35.2892	36.1295	36.9697	37.8099	38.6501	39.4903	40.3306	42.0110	43.6914	45.3719
113	.7688	.6090	.4493	.2895	.1297	.9699	.8102	.6504	.4906	.3308	.0113	.6918	.3722
116	.7690	.6093	.4495	.2897	.1300	.9702	.8104	.6507	.4909	.3311	.0116	.6921	.3725
119	.7693	.6095	.4498	.2900	.1302	.9705	.8107	.6509	.4912	.3314	.0119	.6924	.3729
122	.7695	.6098	.4500	.2902	.1305	.9707	.8110	.6512	.4915	.3317	.0122	.6927	.3732
420125	32.7698	33.6100	34.4503	35.2905	36.1308	36.9710	37.8113	38.6515	39.4918	40.3320	42.0125	43.6930	45.3735
128	.7700	.6102	.4505	.2908	.1310	.9713	.8115	.6518	.4920	.3323	.0128	.6933	.3738
131	.7702	.6105	.4507	.2910	.1313	.9715	.8118	.6521	.4923	.3326	.0131	.6936	.3741
134	.7705	.6107	.4510	.2913	.1315	.9718	.8121	.6523	.4926	.3329	.0134	.6939	.3745
137	.7707	.6110	.4512	.2915	.1318	.9721	.8123	.6526	.4929	.3332	.0137	.6942	.3748
420140	32.7709	33.6112	34.4515	35.2918	36.1320	36.9723	37.8126	38.6529	39.4932	40.3334	42.0140	43.6946	45.3751
143	.7712	.6114	.4517	.2920	.1323	.9726	.8129	.6532	.4934	.3337	.0143	.6949	.3754
146	.7714	.6117	.4520	.2923	.1326	.9728	.8131	.6534	.4937	.3340	.0146	.6952	.3758
149	.7716	.6119	.4522	.2925	.1328	.9731	.8134	.6537	.4940	.3343	.0149	.6955	.3761
152	.7719	.6122	.4525	.2928	.1331	.9734	.8137	.6540	.4943	.3346	.0152	.6958	.3764
420155	32.7721	33.6124	34.4527	35.2930	36.1333	36.9736	37.8140	38.6543	39.4946	40.3349	42.0155	43.6961	45.3767
158	.7723	.6126	.4530	.2933	.1336	.9739	.8142	.6545	.4949	.3352	.0158	.6964	.3771
161	.7726	.6129	.4532	.2935	.1338	.9742	.8145	.6548	.4951	.3355	.0161	.6967	.3774
164	.7728	.6131	.4534	.2938	.1341	.9744	.8148	.6551	.4954	.3357	.0164	.6971	.3777
167	.7730	.6134	.4537	.2940	.1344	.9747	.8150	.6554	.4957	.3360	.0167	.6974	.3780
420170	32.7733	33.6136	34.4539	35.2943	36.1346	36.9750	37.8153	38.6556	39.4960	40.3363	42.0170	43.6977	45.3784
173	.7735	.6138	.4542	.2945	.1349	.9752	.8156	.6559	.4963	.3366	.0173	.6980	.3787
176	.7737	.6141	.4544	.2948	.1351	.9755	.8158	.6562	.4965	.3369	.0176	.6983	.3790
179	.7740	.6143	.4547	.2950	.1354	.9758	.8161	.6565	.4968	.3372	.0179	.6986	.3793
182	.7742	.6146	.4549	.2953	.1357	.9760	.8164	.6567	.4971	.3375	.0182	.6989	.3797
420185	32.7744	33.6148	34.4552	35.2955	36.1359	36.9763	37.8167	38.6570	39.4974	40.3378	42.0185	43.6992	45.3800
188	.7747	.6150	.4554	.2958	.1362	.9765	.8169	.6573	.4977	.3380	.0188	.6996	.3803
191	.7749	.6153	.4557	.2960	.1364	.9768	.8172	.6576	.4980	.3383	.0191	.6999	.3806
194	.7751	.6155	.4559	.2963	.1367	.9771	.8175	.6578	.4982	.3386	.0194	.7002	.3810
197	.7754	.6158	.4562	.2965	.1369	.9773	.8177	.6581	.4985	.3389	.0197	.7005	.3813
420200	32.7756	33.6160	34.4564	35.2968	36.1372	36.9776	37.8180	38.6584	39.4988	40.3392	42.0200	43.7008	45.3816

MEGACYCLES PER SECOND

HARMONICS

BASIC FREQ.	52	54	56	58	60	62	64	66	68	70	72	74	76
420200	21.8504	22.6908	23.5312	24.3716	25.2120	26.0524	26.8928	27.7332	28.5736	29.4140	30.2544	31.0948	31.9352
203	.8506	.6910	.5314	.3718	.2122	.0526	.8930	.7334	.5738	.4142	.2546	.0950	.9354
206	.8507	.6911	.5315	.3719	.2124	.0528	.8932	.7336	.5740	.4144	.2548	.0952	.9357
209	.8509	.6913	.5317	.3721	.2125	.0530	.8934	.7338	.5742	.4146	.2550	.0955	.9359
212	.8510	.6914	.5319	.3723	.2127	.0531	.8936	.7340	.5744	.4148	.2553	.0957	.9361
420215	21.8512	22.6916	23.5320	24.3725	25.2129	26.0533	26.8938	27.7342	28.5746	29.4151	30.2555	31.0959	31.9363
218	.8513	.6918	.5322	.3726	.2131	.0535	.8940	.7344	.5748	.4153	.2557	.0961	.9366
221	.8515	.6919	.5324	.3728	.2133	.0537	.8941	.7346	.5750	.4155	.2559	.0964	.9368
224	.8516	.6921	.5325	.3730	.2134	.0539	.8943	.7348	.5752	.4157	.2561	.0966	.9370
227	.8518	.6923	.5327	.3732	.2136	.0541	.8945	.7350	.5754	.4159	.2563	.0968	.9373
420230	21.8520	22.6924	23.5329	24.3733	25.2138	26.0543	26.8947	27.7352	28.5756	29.4161	30.2566	31.0970	31.9375
233	.8521	.6926	.5330	.3735	.2140	.0544	.8949	.7354	.5758	.4163	.2568	.0972	.9377
236	.8523	.6927	.5332	.3737	.2142	.0546	.8951	.7356	.5760	.4165	.2570	.0975	.9379
239	.8524	.6929	.5334	.3739	.2143	.0548	.8953	.7358	.5763	.4167	.2572	.0977	.9382
242	.8526	.6931	.5336	.3740	.2145	.0550	.8955	.7360	.5765	.4169	.2574	.0979	.9384
420245	21.8527	22.6932	23.5337	24.3742	25.2147	26.0552	26.8957	27.7562	28.5767	29.4172	30.2576	31.0981	31.9386
248	.8529	.6934	.5339	.3744	.2149	.0554	.8959	.7364	.5769	.4174	.2579	.0984	.9388
251	.8531	.6936	.5341	.3746	.2151	.0556	.8961	.7366	.5771	.4176	.2581	.0986	.9391
254	.8532	.6937	.5342	.3747	.2152	.0557	.8963	.7368	.5773	.4178	.2583	.0988	.9393
257	.8534	.6939	.5344	.3749	.2154	.0559	.8964	.7370	.5775	.4180	.2585	.0990	.9395
420260	21.8535	22.6940	23.5346	24.3751	25.2156	26.0561	26.8966	27.7372	28.5777	29.4182	30.2587	31.0992	31.9398
263	.8537	.6942	.5347	.3753	.2158	.0563	.8968	.7374	.5779	.4184	.2589	.0995	.9400
266	.8538	.6944	.5349	.3754	.2160	.0565	.8970	.7276	.5781	.4186	.2592	.0997	.9402
269	.8540	.6945	.5351	.3756	.2161	.0567	.8972	.7378	.5783	.4188	.2594	.0999	.9404
272	.8541	.6947	.5352	.3758	.2163	.0569	.8974	.7380	.5785	.4190	.2596	.1001	.9407
420275	21.8543	22.6949	23.5354	24.3760	25.2165	26.0571	26.8976	27.7382	28.5787	29.4193	30.2598	31.1004	31.9409
278	.8545	.6950	.5356	.3761	.2167	.0572	.8978	.7383	.5789	.4195	.2600	.1006	.9411
281	.8546	.6952	.5357	.3763	.2169	.0574	.8980	.7385	.5791	.4197	.2602	.1008	.9414
284	.8548	.6953	.5359	.3765	.2170	.0576	.8982	.7387	.5793	.4199	.2604	.1010	.9416
287	.8549	.6955	.5361	.3766	.2172	.0578	.8984	.7389	.5795	.4201	.2607	.1012	.9418
420290	21.8551	22.6957	23.5362	24.3768	25.2174	26.0580	26.8986	27.7391	28.5797	29.4203	30.2609	31.1015	31.9420
293	.8552	.6958	.5364	.3770	.2176	.0582	.8988	.7393	.5799	.4205	.2611	.1017	.9423
296	.8554	.6960	.5366	.3772	.2178	.0584	.8989	.7395	.5801	.4207	.2613	.1019	.9425
299	.8555	.6961	.5367	.3773	.2179	.0585	.8991	.7397	.5803	.4209	.2615	.1021	.9427
302	.8557	.6963	.5369	.3775	.2181	.0587	.8993	.7399	.5805	.4211	.2617	.1023	.9430
420305	21.8559	22.6965	23.5371	24.3777	25.2183	26.0589	26.8995	27.7401	28.5807	29.4214	30.2620	31.0126	31.9432
308	.8560	.6966	.5372	.3779	.2185	.0591	.8997	.7403	.5809	.4216	.2622	.1028	.9434
311	.8562	.6968	.5374	.3780	.2187	.0593	.8999	.7405	.5811	.4218	.2624	.1030	.9436
314	.8563	.6970	.5376	.3782	.2188	.0595	.9001	.7407	.5814	.4220	.2626	.1032	.9439
317	.8565	.6971	.5378	.3784	.2190	.0597	.9003	.7409	.5816	.4222	.2628	.1035	.9441
420320	21.8566	22.6973	23.5379	24.3786	25.2192	26.0598	26.9005	27.7411	28.5818	29.4224	30.2630	31.1037	31.9443
323	.8568	.6974	.5381	.3787	.2194	.0600	.9007	.7413	.5820	.4226	.2633	.1039	.9445
326	.8570	.6976	.5383	.3789	.2196	.0602	.9009	.7415	.5822	.4228	.2635	.1041	.9448
329	.8571	.6978	.5384	.3791	.2197	.0604	.9011	.7417	.5824	.4230	.2637	.1043	.9450
332	.8573	.6979	.5386	.3793	.2199	.0606	.9012	.7419	.5826	.4232	.2639	.1046	.9452
420335	21.8574	22.6981	23.5388	24.3794	25.2201	26.0608	26.9014	27.7421	28.5828	29.4235	30.2641	31.1048	31.9455
338	.8576	.6983	.5389	.3796	.2203	.0610	.9016	.7423	.5830	.4237	.2643	.1050	.9457
341	.8577	.6984	.5391	.3798	.2205	.0611	.9018	.7425	.5832	.4239	.2646	.1052	.9459
344	.8579	.6986	.5393	.3800	.2206	.0613	.9020	.7427	.5834	.4241	.2648	.1055	.9461
347	.8580	.6987	.5394	.3801	.2208	.0615	.9022	.7429	.5836	.4243	.2650	.1057	.9464
420350	21.8582	22.6989	23.5396	24.3803	25.2210	26.0617	26.9024	27.7431	28.5838	29.4245	30.2652	31.1059	31.9466
353	.8584	.6991	.5398	.3805	.2212	.0619	.9026	.7433	.5840	.4247	.2654	.1061	.9468
356	.8585	.6992	.5399	.3806	.2214	.0621	.9028	.7435	.5842	.4249	.2656	.1063	.9471
359	.8587	.6994	.5401	.3808	.2215	.0623	.9030	.7437	.5844	.4251	.3658	.1066	.9473
362	.8588	.6995	.5403	.3810	.2217	.0624	.9032	.7439	.5846	.4253	.2661	.1068	.9475
420365	21.8590	22.6997	23.5404	24.3812	25.2219	26.0626	26.9034	27.7441	28.5848	29.4256	30.2663	31.1070	31.9477
368	.8591	.6999	.5406	.3813	.2221	.0628	.9036	.7443	.5850	.4258	.2665	.1072	.9480
371	.8593	.7000	.5408	.3815	.2223	.0630	.9037	.7445	.5852	.4260	.2667	.1075	.9482
374	.8594	.7002	.5409	.3817	.2224	.0632	.9039	.7447	.5854	.4262	.2669	.1077	.9384
377	.8596	.7004	.5411	.3819	.2226	.0634	.9041	.7449	.5856	.4264	.2671	.1079	.9487
420380	21.8598	22.7005	23.5413	24.3820	25.2228	26.0636	26.9043	27.7451	28.5858	29.4266	30.2674	31.1081	31.9489
383	.8599	.7007	.5414	.3822	.2230	.0637	.9045	.7453	.5860	.4268	.2676	.1083	.9491
386	.8601	.7008	.5416	.3824	.2232	.0639	.9047	.7455	.5862	.4270	.2678	.1086	.9493
389	.8602	.7010	.5418	.3826	.2233	.0641	.9049	.7457	.5865	.4272	.2680	.1088	.9496
392	.8604	.7012	.5420	.3827	.2235	.0643	.9051	.7459	.5867	.4274	.2682	.1090	.9498
420395	21.8605	22.7013	23.5421	24.3829	25.2237	26.0645	26.9053	27.7461	28.5869	29.4277	30.2684	31.1092	31.9500
398	.8607	.7015	.5423	.3831	.2239	.0647	.9055	.7463	.5871	.4279	.2687	.1095	.9502
401	.8609	.7017	.5425	.3833	.2241	.0649	.9057	.7465	.5873	.4281	.2689	.1097	.9505
404	.8610	.7018	.5426	.3834	.2242	.0650	.9059	.7467	.5875	.4283	.2691	.1099	.9507
407	.8612	.7020	.5428	.3836	.2244	.0652	.9060	.7469	.5877	.4285	.2693	.1101	.9509
420410	21.8613	22.7021	23.5430	24.3838	25.2246	26.0654	26.9062	27.7471	28.5879	29.4287	30.2695	31.1103	31.9512
413	.8615	.7023	.5431	.3840	.2248	.0656	.9064	.7473	.5881	.4289	.2697	.1106	.9514
416	.8616	.7025	.5433	.3841	.2250	.0658	.9066	.7475	.5883	.4291	.2700	.1108	.9516
419	.8618	.7026	.5435	.3843	.2251	.0660	.9068	.7477	.5885	.4293	.2702	.1110	.9518
422	.8619	.7028	.5436	.3845	.2253	.0662	.9070	.7479	.5887	.4295	.2704	.1112	.9521
420425	21.8621	22.7030	23.5438	24.3847	25.2255	26.0664	26.9072	27.7481	28.5889	29.4298	30.2706	31.1115	31.9523
428	.8623	.7031	.5440	.3848	.2257	.0665	.9074	.7482	.5891	.4300	.2708	.1117	.9525
431	.8624	.7033	.5441	.3850	.2259	.0667	.9076	.7484	.5893	.4302	.2710	.1119	.9528
434	.8626	.7034	.5443	.3852	.2260	.0669	.9078	.7486	.5895	.4304	.2712	.1121	.9530
437	.8627	.7036	.5445	.3853	.2262	.0671	.9080	.7488	.5897	.4306	.2715	.1123	.9532
420440	21.8629	22.7038	23.5446	24.3855	25.2264	26.0673	26.9082	27.7490	28.5899	29.4308	30.2717	31.1126	31.9534
443	.8630	.7039	.5448	.3857	.2266	.0675	.9084	.7492	.5901	.4310	.2719	.1128	.9537
446	.8632	.7041	.5450	.3859	.2268	.0677	.9085	.7494	.5903	.4312	.2721	.1130	.9539
449	.8633	.7042	.5451	.3860	.2269	.0678	.9087	.7496	.5905	.4314	.2723	.1132	.9541
452	.8635	.7044	.5453	.3862	.2271	.0680	.9089	.7498	.5907	.4316	.2725	.1134	.9544
420455	21.8637	22.7046	23.5455	24.3864	25.2273	26.0682	26.9091	27.7500	28.5909	29.4319	30.2728	31.1137	31.9546
458	.8638	.7047	.5456	.3866	.2275	.0684	.9093	.7502	.5911	.4321	.3730	.1139	.9548
461	.8640	.7049	.5458	.3867	.2277	.0686	.9095	.7504	.5913	.4323	.2732	.1141	.9550
464	.8641	.7051	.5460	.3869	.2278	.0688	.9097	.7506	.5916	.4325	.2734	.1143	.9553
467	.8643	.7052	.5462	.3871	.2280	.0690	.9099	.7508	.5918	.4327	.2736	.1146	.9555
420470	21.8644	22.7054	23.5463	24.3873	25.2282	26.0691	26.9101	27.7510	28.5920	29.4329	30.2738	31.1148	31.9557
473	.8646	.7055	.5465	.3874	.2284	.0693	.9103	.7512	.5922	.4331	.2741	.1150	.9559
476	.8648	.7057	.5467	.3876	.2286	.0695	.9105	.7514	.5924	.4333	.2743	.1152	.9562
479	.8649	.7059	.5468	.3878	.2287	.0697	.9107	.7516	.5926	.4335	.2745	.1154	.9564
482	.8651	.7060	.5470	.3880	.2289	.0699	.9108	.7518	.5928	.4337	.2747	.1157	.9566
420485	21.8652	22.7062	23.5472	24.3881	25.2291	26.0701	26.9110	27.7520	28.5930	29.4340	30.2749	31.1159	31.9569
488	.8654	.7064	.5473	.3883	.2293	.0703	.9112	.7522	.5932	.4342	.2751	.1161	.9571
491	.8655	.7065	.5475	.3885	.2295	.0704	.9114	.7524	.5934	.4344	.2754	.1163	.9573
494	.8657	.7067	.5477	.3887	.2296	.0706	.9116	.7526	.5936	.4346	.2756	.1166	.9575
497	.8658	.7068	.5478	.3888	.2298	.0708	.9118	.7528	.5938	.4348	.2758	.1168	.9578
420500	21.8660	22.7070	23.5480	24.3890	25.2300	26.0710	26.9120	27.7530	28.5940	29.4350	30.2760	31.1170	31.9580

MEGACYCLES PER SECOND

BASIC FREQ.	78	80	82	84	86	88	90	92	94	96	100	104	108
420200	32.7756	33.6160	34.4564	35.2968	36.1372	36.9776	37.8180	38.6584	39.4988	40.3392	42.0200	43.7008	45.3816
203	.7758	.6162	.4566	.2971	.1375	.9779	.8183	.6587	.4991	.3395	.0203	.7011	.3819
206	.7761	.6165	.4569	.2973	.1377	.9781	.8185	.6590	.4994	.3398	.0206	.7014	.3822
209	.7763	.6167	.4571	.2976	.1380	.9784	.8188	.6592	.4996	.3401	.0209	.7017	.3826
212	.7765	.6170	.4574	.2978	.1382	.9787	.8191	.6595	.4999	.3404	.0212	.7020	.3829
420215	32.7768	33.6172	34.4576	35.2981	36.1385	36.9789	37.8194	38.6598	39.5002	40.3406	42.0215	43.7024	45.3832
218	.7770	.6174	.4579	.2983	.1387	.9792	.8196	.6601	.5005	.3409	.0218	.7027	.3835
221	.7772	.6177	.4581	.2986	.1390	.9794	.8199	.6603	.5008	.3412	.0221	.7030	.3839
224	.7775	.6179	.4584	.2988	.1393	.9797	.8202	.6606	.5011	.3415	.0224	.7033	.3842
227	.7777	.6182	.4586	.2991	.1395	.9800	.8204	.6609	.5013	.3418	.0227	.7036	.3845
420230	32.7779	33.6184	34.4589	35.2993	36.1398	36.9802	37.8207	38.6612	39.5016	40.3421	42.0230	43.7039	45.3848
233	.7782	.6186	.4591	.2996	.1400	.9805	.8210	.6614	.5019	.3424	.0233	.7042	.3852
236	.7784	.6189	.4594	.2998	.1403	.9808	.8212	.6617	.5022	.3427	.0236	.7045	.3855
239	.7786	.6191	.4596	.3001	.1406	.9810	.8215	.6620	.5025	.3429	.0239	.7049	.3858
242	.7789	.6194	.4598	.3003	.1408	.9813	.8218	.6623	.5027	.3432	.0242	.7052	.3861
420245	32.7791	33.6196	34.4601	35.3006	36.1411	36.9816	37.8221	38.6625	39.5030	40.3435	42.0245	43.7055	45.3865
248	.7793	.6198	.4603	.3008	.1413	.9818	.8223	.6628	.5033	.3438	.0248	.7058	.3868
251	.7796	.6201	.4606	.3011	.1416	.9821	.8226	.6631	.5036	.3441	.0251	.7061	.3871
254	.7798	.8203	.4608	.3013	.1418	.9824	.8229	.6634	.5039	.3444	.0254	.7064	.3874
257	.7800	.6206	.4611	.3016	.1421	.9826	.8231	.6636	.5042	.3447	.0257	.7067	.3878
420260	32.7803	33.6208	34.4613	35.3018	36.1424	36.9829	37.8234	38.6639	39.5044	40.3450	42.0260	43.7070	45.3881
263	.7805	.6210	.4616	.3021	.1426	.9831	.8237	.6642	.5047	.3452	.0263	.7074	.3884
266	.7807	.6213	.4618	.3023	.1429	.9834	.8239	.6645	.5050	.3455	.0266	.7077	.3887
269	.7810	.6215	.4621	.3026	.1431	.9837	.8242	.6647	.5053	.3458	.0269	.7080	.3891
272	.7812	.6218	.4623	.3028	.1434	.9839	.8245	.6650	.5056	.3461	.0272	.7083	.3894
420275	32.7815	33.6220	34.4626	35.3031	36.1437	36.9842	37.8248	38.6653	39.5059	40.3464	42.0275	43.7086	45.3897
278	.7817	.6222	.4628	.3034	.1439	.9845	.8250	.6656	.5061	.3467	.0278	.7089	.3900
281	.7819	.6225	.4630	.3036	.1442	.9847	.8253	.6659	.5064	.3470	.0281	.7092	.3903
284	.7822	.6227	.4633	.3039	.1444	.9850	.8256	.6661	.5067	.3473	.0284	.7095	.3907
287	.7824	.6230	.4635	.3041	.1447	.9853	.8258	.6664	.5070	.3476	.0287	.7098	.3910
420290	32.7826	33.6232	34.4638	35.3044	36.1449	36.9855	37.8261	38.6667	39.5073	40.2478	42.0290	43.7102	45.3913
293	.7829	.6234	.4640	.3046	.1452	.9858	.8264	.6670	.5075	.3481	.0293	.7105	.3916
296	.7831	.6237	.4643	.3049	.1455	.9860	.8266	.6672	.5078	.3484	.0296	.7108	.3920
299	.7833	.6239	.4645	.3051	.1457	.9863	.8269	.6675	.5081	.3487	.0299	.7111	.3923
302	.7836	.6242	.4648	.3054	.1460	.9866	.8272	.6678	.5084	.3490	.0302	.7114	.3926
420305	32.7838	33.6244	34.4650	35.3056	36.1462	36.9868	37.8275	38.6681	39.5087	40.3493	42.0305	43.7117	45.3929
308	.7840	.6246	.4653	.3059	.1465	.9871	.8277	.6683	.5090	.3496	.0308	.7120	.3933
311	.7843	.6249	.4655	.3061	.1467	.9874	.8280	.6686	.5092	.3499	.0311	.7123	.3936
314	.7845	.6251	.4657	.3064	.1470	.9876	.8283	.6689	.5095	.3501	.0314	.7127	.3939
317	.7847	.6254	.4660	.3066	.1473	.9879	.8285	.6692	.5098	.3504	.0317	.7130	.3942
420320	32.7850	33.6256	34.4662	35.3069	36.1475	36.9882	37.8288	38.6694	39.5101	40.3507	42.0320	43.7133	45.3946
323	.7852	.6258	.4665	.3071	.1478	.9884	.8291	.6697	.5104	.3510	.0323	.7136	.3949
326	.7854	.6261	.4667	.3074	.1480	.9887	.8293	.6700	.5106	.3513	.0326	.7139	.3952
329	.7857	.6263	.4670	.3076	.1483	.9890	.8296	.6703	.5109	.3516	.0329	.7142	.3955
332	.7859	.6266	.4672	.3079	.1486	.9892	.8299	.6705	.5112	.3519	.0332	.7145	.3959
420335	32.7861	33.6268	34.4675	35.3081	36.1488	36.9895	37.8302	38.6708	39.5115	40.3522	42.0335	43.7148	45.3962
338	.7864	.6270	.4677	.3084	.1491	.9897	.8304	.6711	.5118	.3524	.0338	.7152	.3965
341	.7866	.6273	.4680	.3086	.1493	.9900	.8307	.6714	.5121	.3527	.0341	.7155	.3968
344	.7868	.6275	.4682	.3089	.1496	.9903	.8310	.6716	.5123	.3530	.0344	.7158	.3972
347	.7871	.6278	.4685	.3091	.1498	.9905	.8312	.6719	.5126	.3533	.0347	.7161	.3975
420350	32.7873	33.6280	34.4687	35.3094	36.1501	36.9908	37.8315	38.6722	39.5129	40.3536	42.0350	43.7164	45.3978
353	.7875	.6282	.4689	.3097	.1504	.9911	.8318	.6725	.5132	.3539	.0353	.7167	.3981
356	.7878	.6285	.4692	.3099	.1506	.9913	.8320	.6728	.5135	.3542	.0356	.7170	.3984
359	.7880	.6287	.4694	.3102	.1509	.9916	.8323	.6730	.5137	.3545	.0359	.7173	.3988
362	.7882	.6290	.4697	.3104	.1511	.9919	.8326	.6733	.5140	.3548	.0362	.7176	.3991
420365	32.7885	33.6292	34.4699	35.3107	36.1514	36.9921	37.8329	38.6736	39.5143	40.3550	42.0365	43.7180	45.3994
368	.7887	.6294	.4702	.3109	.1516	.9924	.8331	.6739	.5146	.3553	.0368	.7183	.3997
371	.7889	.6297	.4704	.3112	.1519	.9926	.8334	.6741	.5149	.3556	.0371	.7186	.4001
374	.7892	.6299	.4707	.3114	.1522	.9929	.8337	.6744	.5152	.3559	.0374	.7189	.4004
377	.7894	.6302	.4709	.3117	.1524	.9932	.8339	.6747	.5154	.3562	.0377	.7192	.4007
420380	32.7896	33.6304	34.4712	35.3119	36.1527	36.9934	37.8342	38.6750	39.5157	40.3565	42.0380	43.7195	45.4010
383	.7899	.6306	.4714	.3122	.1529	.9937	.8345	.6752	.5160	.3568	.0383	.7198	.4014
386	.7901	.6309	.4717	.3124	.1532	.9940	.8347	.6755	.5163	.3571	.0386	.7201	.4017
389	.7903	.6311	.4719	.3127	.1535	.9942	.8350	.6758	.5166	.3573	.0389	.7205	.4020
392	.7906	.6314	.4721	.3129	.1537	.9945	.8353	.6761	.5168	.3576	.0392	.7208	.4023
420395	32.7908	33.6316	34.4724	35.3132	36.1540	36.9948	37.8356	38.6763	39.5171	40.3579	42.0395	43.7211	45.4027
398	.7910	.6318	.4726	.3134	.1542	.9950	.8358	.6766	.5174	.3582	.0398	.7214	.4030
401	.7913	.6321	.4729	.3137	.1545	.9953	.8361	.6769	.5177	.3585	.0401	.7217	.4033
404	.7915	.6323	.4731	.3139	.1547	.9956	.8364	.6772	.5180	.3588	.0404	.7220	.4036
407	.7917	.6326	.4734	.3142	.1550	.9958	.8366	.6774	.5183	.3591	.0407	.7223	.4040
420410	32.7920	33.6328	34.4736	35.3144	36.1553	36.9961	37.8369	38.6777	39.5185	40.3594	42.0410	43.7226	45.4043
413	.7922	.6330	.4739	.3147	.1555	.9963	.8372	.6780	.5188	.3596	.0413	.7230	.4046
416	.7924	.6333	.4741	.3149	.1558	.9966	.8374	.6783	.5191	.3599	.0416	.7233	.4049
419	.7927	.6335	.4744	.3152	.1560	.9969	.8377	.6785	.5194	.3602	.0419	.7236	.4053
422	.7929	.6338	.4746	.3154	.1563	.9971	.8380	.6788	.5197	.3605	.0422	.7239	.4056
420425	32.7932	33.6340	34.4749	35.3157	36.1566	36.9974	37.8383	38.6791	39.5200	40.3608	42.0425	43.7242	45.4059
428	.7934	.6342	.4751	.3160	.1568	.9977	.8385	.6794	.5202	.3611	.0428	.7245	.4062
431	.7936	.6345	.4753	.3162	.1571	.9979	.8388	.6797	.5205	.3614	.0431	.7248	.4065
434	.7939	.6347	.4756	.3165	.1573	.9982	.8391	.6799	.5208	.3617	.0434	.7251	.4069
437	.7941	.6350	.4758	.3167	.1576	.9985	.8393	.6802	.5211	.3620	.0437	.7254	.4072
420440	32.7943	33.6352	34.4761	35.3170	36.1578	36.9987	37.8396	38.6805	39.5214	40.3622	42.0440	43.7258	45.4075
443	.7946	.6354	.4763	.3172	.1581	.9990	.8399	.6808	.5216	.3625	.0443	.7261	.4078
446	.7948	.6357	.4766	.3175	.1584	.9992	.8401	.6810	.5219	.3628	.0446	.7264	.4082
449	.7950	.6359	.4768	.3177	.1586	.9995	.8404	.6813	.5222	.3631	.0449	.7267	.4085
452	.7953	.6362	.4771	.3180	.1589	.9998	.8407	.6816	.5225	.3634	.0452	.7270	.4088
420455	32.7955	33.6364	34.4773	35.3182	36.1591	37.0000	37.8410	38.6819	39.5228	40.3637	42.0455	43.7273	45.4091
458	.7957	.6366	.4776	.3185	.1594	.0003	.8412	.6821	.5231	.3640	.0458	.7276	.4095
461	.7960	.6369	.4778	.3187	.1596	.0006	.8415	.6824	.5233	.3643	.0461	.7279	.4098
464	.7962	.6371	.4780	.3190	.1599	.0008	.8418	.6827	.5236	.3645	.0464	.7283	.4101
467	.7964	.6374	.4783	.3192	.1602	.0011	.8420	.6830	.5239	.3648	.0467	.7286	.4104
420470	32.7967	33.6376	34.4785	35.3195	36.1604	37.0014	37.8423	38.6832	39.5242	40.3651	42.0470	43.7289	45.4108
473	.7969	.6378	.4788	.3197	.1607	.0016	.8426	.6835	.5245	.3654	.0473	.7292	.4111
476	.7971	.6381	.4790	.3200	.1609	.0019	.8428	.6838	.5247	.3657	.0476	.7295	.4114
479	.7974	.6383	.4793	.3202	.1612	.0022	.8431	.6841	.5250	.3660	.0479	.7298	.4117
482	.7976	.6386	.4795	.3205	.1615	.0024	.8434	.6843	.5253	.3663	.0482	.7301	.4121
420485	32.7978	33.6388	34.4798	35.3207	36.1617	37.0027	37.8437	38.6846	39.5256	40.3666	42.0485	43.7304	45.4124
488	.7981	.6390	.4800	.3210	.1620	.0029	.8439	.6849	.5259	.3668	.0488	.7308	.4127
491	.7983	.6393	.4803	.3212	.1622	.0032	.8442	.6852	.5262	.3671	.0491	.7311	.4130
494	.7985	.6395	.4805	.3215	.1625	.0035	.8445	.6854	.5264	.3674	.0494	.7314	.4134
497	.7988	.6398	.4808	.3217	.1627	.0037	.8447	.6857	.5267	.3677	.0497	.7317	.4137
420500	32.7990	33.6400	34.4810	35.3220	36.1630	37.0040	37.8450	38.6860	39.5270	40.3680	42.0500	43.7320	45.4140

H A R M O N I C S

BASIC FREQ.	52	54	56	58	60	62	64	66	68	70	72	74	76
420500	21.8660	22.7070	23.5480	24.3890	25.2300	26.0710	26.9120	27.7530	28.5940	29.4350	30.2760	31.1170	31.9580
503	.8662	.7072	.5482	.3892	.2302	.0712	.9122	.7532	.5942	.4352	.2762	.1172	.9582
506	.8663	.7073	.5483	.3893	.2304	.0714	.9124	.7534	.5944	.4354	.2764	.1174	.9585
509	.8665	.7075	.5485	.3895	.2305	.0716	.9126	.7536	.5946	.4356	.2766	.1177	.9587
512	.8666	.7076	.5487	.3897	.2307	.0717	.9128	.7538	.5948	.4358	.2769	.1179	.9589
420515	21.8668	22.7078	23.5488	24.3899	25.2309	26.0719	26.9130	27.7540	28.5950	29.4361	30.2771	31.1181	31.9591
518	.8669	.7080	.5490	.3900	.2311	.0721	.9132	.7542	.5952	.4363	.2773	.1183	.9594
521	.8671	.7081	.5492	.3902	.2313	.0723	.9133	.7544	.5954	.4365	.2775	.1186	.9596
524	.8672	.7083	.5493	.3904	.2314	.0725	.9135	.7546	.5956	.4367	.2777	.1188	.9598
527	.8674	.7085	.5495	.3906	.2316	.0727	.9137	.7548	.5958	.4369	.2779	.1190	.9601
420530	21.8676	22.7086	23.5497	24.3907	25.2318	26.0729	26.9139	27.7550	28.5960	29.4371	30.2782	31.1192	31.9603
533	.8677	.7088	.5498	.3909	.2320	.0730	.9141	.7552	.5962	.4373	.2784	.1194	.9605
536	.8679	.7089	.5500	.3911	.2322	.0732	.9143	.7554	.5964	.4375	.2786	.1197	.9607
539	.8680	.7091	.5502	.3913	.2323	.0734	.9145	.7556	.5967	.4377	.2788	.1199	.9610
542	.8682	.7093	.5504	.3914	.2325	.0736	.9147	.7558	.5969	.4379	.2790	.1201	.9612
420545	21.8683	22.7094	23.5505	24.3916	25.2327	26.0738	26.9149	27.7560	28.5971	29.4382	30.2792	31.1203	31.9614
548	.8685	.7096	.5507	.3918	.2329	.0740	.9151	.7562	.5973	.4384	.2795	.1206	.9616
551	.8687	.7098	.5509	.3920	.2331	.0742	.9153	.7564	.5975	.4386	.2797	.1208	.9619
554	.8688	.7099	.5510	.3921	.2332	.0743	.9155	.7566	.5977	.4388	.2799	.1210	.9621
557	.8690	.7101	.5512	.3923	.2334	.0745	.9156	.7568	.5979	.4390	.2801	.1212	.9623
420560	21.8691	22.7102	23.5514	24.3925	25.2336	26.0747	26.9158	27.7570	28.5981	29.4392	30.2803	31.1214	31.9626
563	.8693	.7104	.5515	.3927	.2338	.0749	.9160	.7572	.5983	.4394	.2805	.1217	.9628
566	.8694	.7106	.5517	.3928	.2340	.0751	.9162	.7574	.5985	.4396	.2808	.1219	.9630
569	.8696	.7107	.5519	.3930	.2341	.0753	.9164	.7576	.5987	.4398	.2810	.1221	.9632
572	.8697	.7109	.5520	.3932	.2343	.0755	.9166	.7568	.5989	.4400	.2812	.1223	.9635
420575	21.8699	22.7111	23.5522	24.3934	25.2345	26.0757	26.9168	27.7580	28.5991	29.4403	30.2814	31.1226	31.9637
578	.8701	.7112	.5524	.3935	.2347	.0758	.9170	.7581	.5993	.4405	.2816	.1228	.9639
581	.8702	.7114	.5525	.3937	.2349	.0760	.9172	.7583	.5995	.4407	.2818	.1230	.9642
584	.8704	.7115	.5527	.3939	.2350	.0762	.9174	.7585	.5997	.4409	.2820	.1232	.9644
587	.8705	.7117	.5529	.3940	.2352	.0764	.9176	.7587	.5999	.4411	.2823	.1234	.9646
420590	21.8707	22.7119	23.5530	24.3942	25.2354	26.0766	26.9178	27.7589	28.6001	28.4413	30.2825	31.1237	31.9648
593	.8708	.7120	.5532	.3944	.2356	.0768	.9180	.7591	.6003	.4415	.2827	.1239	.9651
596	.8710	.7122	.5534	.3946	.2358	.0770	.9181	.7593	.6005	.4417	.2829	.1241	.9653
599	.8711	.7123	.5535	.3947	.2359	.0771	.9183	.7595	.6007	.4419	.2831	.1243	.9655
602	.8713	.7125	.5537	.3949	.2361	.0773	.9185	.7597	.6009	.4421	.2833	.1245	.9658
420605	21.8715	22.7127	23.5539	24.3951	25.2363	26.0775	26.9187	27.7599	28.6011	29.4424	30.2836	31.1248	31.9660
608	.8716	.7128	.5540	.3953	.2365	.0777	.9189	.7601	.6013	.4426	.2838	.1250	.9662
611	.8718	.7130	.5542	.3954	.2367	.0779	.9191	.7603	.6015	.4428	.2840	.1252	.9664
614	.8719	.7132	.5544	.3956	.2368	.0781	.9193	.7605	.6018	.4430	.2842	.1254	.9667
617	.8721	.7133	.5546	.3958	.2370	.0783	.9195	.7607	.6020	.4432	.2844	.1257	.9669
420620	21.8722	22.7135	23.5547	24.3960	25.2372	26.0784	26.9197	27.7609	28.6022	29.4434	30.2846	31.1259	31.9671
623	.8724	.7136	.5549	.3961	.2374	.0786	.9199	.7611	.6024	.4436	.2849	.1261	.9673
626	.8726	.7138	.5551	.3963	.2376	.0788	.9201	.7613	.6026	.4438	.2851	.1263	.9676
629	.8727	.7140	.5552	.3965	.2377	.0790	.9203	.7615	.6028	.4440	.2853	.1265	.9678
632	.8729	.7141	.5554	.3967	.2379	.0792	.9204	.7617	.6030	.4442	.2855	.1268	.9680
420635	21.8730	22.7143	23.5556	24.3968	25.2381	26.0794	26.9206	27.7619	28.6032	29.4445	30.2857	31.1270	31.9683
638	.8732	.7145	.5557	.3970	.2383	.0796	.9208	.7621	.6034	.4447	.2859	.1272	.9685
641	.8733	.7146	.5559	.3972	.2385	.0797	.9210	.7623	.6036	.4449	.2862	.1274	.9687
644	.8735	.7148	.5561	.3974	.2386	.0799	.9212	.7625	.6038	.4451	.2864	.1277	.9689
647	.8736	.7149	.5562	.3975	.2388	.0801	.9214	.7627	.6040	.4453	.2866	.1279	.9692
420650	21.8738	22.7151	23.5564	24.3977	25.2390	26.0803	26.9216	27.7629	28.6042	29.4455	30.2868	31.1281	31.9694
653	.8740	.7153	.5566	.3979	.2392	.0805	.9218	.7631	.6044	.4457	.2870	.1283	.9696
656	.8741	.7154	.5567	.3980	.2394	.0807	.9220	.7633	.6046	.4459	.2872	.1285	.9699
659	.8743	.7156	.5569	.3982	.2395	.0809	.9222	.7635	.6048	.4461	.2874	.1288	.9701
662	.8744	.7157	.5571	.3984	.2397	.0810	.9224	.7637	.6050	.4463	.2877	.1290	.9703
420665	21.8746	22.7159	23.5572	24.3986	25.2399	26.0812	26.9226	27.7639	28.6052	29.4466	30.2879	31.1292	31.9705
668	.8747	.7161	.5574	.3987	.2401	.0814	.9228	.7641	.6054	.4468	.2881	.1294	.9708
671	.8749	.7162	.5576	.3989	.2403	.0816	.9229	.7643	.6056	.4470	.2883	.1297	.9710
674	.8750	.7164	.5577	.3991	.2404	.0818	.9231	.7645	.6058	.4472	.2885	.1299	.9712
677	.8752	.7166	.5579	.3993	.2406	.0820	.9233	.7647	.6060	.4474	.2887	.1301	.9715
420680	21.8754	22.7167	23.5581	24.3994	25.2408	26.0822	26.9235	27.7649	28.6062	29.4476	30.2890	31.1303	31.9717
683	.8755	.7169	.5582	.3996	.2410	.0823	.9237	.7651	.6064	.4478	.2892	.1305	.9719
686	.8757	.7170	.5584	.3998	.2412	.0825	.9239	.7653	.6066	.4480	.2894	.1308	.9721
689	.8758	.7172	.5586	.4000	.2413	.0827	.9241	.7655	.6069	.4482	.2896	.1310	.9724
692	.8760	.7174	.5588	.4001	.2415	.0829	.9243	.7657	.6071	.4484	.2898	.1312	.9726
420695	21.8761	22.7175	23.5589	24.4003	25.2417	26.0831	26.9245	27.7659	28.6073	.4487	30.2900	31.1314	31.9728
698	.8763	.7177	.5591	.4005	.2419	.0833	.9247	.7661	.6075	.4489	.2903	.1317	.9730
701	.8765	.7179	.5593	.4007	.2421	.0835	.9249	.7663	.6077	.4491	.2905	.1319	.9733
704	.8766	.7180	.5594	.4008	.2422	.0836	.9251	.7665	.6079	.4493	.2907	.1321	.9735
707	.8768	.7182	.5596	.4010	.2424	.0838	.9252	.7667	.6081	.4495	.2909	.1323	.9737
420710	21.8769	22.7183	23.5598	24.4012	25.2426	26.0840	26.9254	27.7669	28.6083	29.4497	30.2911	31.1325	31.9740
713	.8771	.7185	.5599	.4014	.2428	.0842	.9256	.7671	.6085	.4499	.2913	.1328	.9742
716	.8772	.7187	.5601	.4015	.2430	.0844	.9258	.7673	.6087	.4501	.2916	.1330	.9744
719	.8774	.7188	.5603	.4017	.2431	.0846	.9260	.7675	.6089	.4503	.2918	.1332	.9746
722	.8775	.7190	.5604	.4019	.2433	.0848	.9262	.7677	.6091	.4505	.2920	.1334	.9749
420725	21.8777	22.7192	23.5606	24.4021	25.2435	26.0850	26.9264	27.7679	28.6093	29.4508	30.2922	31.1337	31.9751
728	.8779	.7193	.5608	.4022	.2437	.0851	.9266	.7680	.6095	.4510	.2924	.1339	.9753
731	.8780	.7195	.5609	.4024	.2439	.0853	.9268	.7682	.6097	.4512	.2926	.1341	.9756
734	.8782	.7196	.5611	.4026	.2440	.0855	.9270	.7684	.6099	.4514	.2928	.1343	.9758
737	.8783	.7198	.5613	.4027	.2442	.0857	.9272	.7686	.6101	.4516	.2931	.1345	.9760
420740	21.8785	22.7200	23.5614	24.4029	25.2444	26.0859	26.9274	27.7688	28.6103	29.4518	30.2933	31.1348	31.9762
743	.8786	.7201	.5616	.4031	.2446	.0861	.9276	.7690	.6105	.4520	.2935	.1350	.9765
746	.8788	.7203	.5618	.4033	.2448	.0863	.9277	.7692	.6107	.4522	.2937	.1352	.9767
749	.8789	.7204	.5619	.4034	.2449	.0864	.9279	.7694	.6109	.4524	.2939	.1354	.9769
752	.8791	.7206	.5621	.4036	.2451	.0866	.9281	.7696	.6111	.4526	.2941	.1356	.9772
420755	21.8793	22.7208	23.5623	24.4038	25.2453	26.0868	26.9283	27.7698	28.6113	29.4529	30.2944	31.1359	31.9774
758	.8794	.7209	.5624	.4040	.2455	.0870	.9285	.7700	.6115	.4531	.2946	.1361	.9776
761	.8796	.7211	.5626	.4041	.2457	.0872	.9287	.7702	.6117	.4533	.2948	.1363	.9778
764	.8797	.7213	.5628	.4043	.2458	.0874	.9289	.7704	.6120	.4535	.2950	.1365	.9781
767	.8799	.2714	.5630	.4045	.2460	.0876	.9291	.7706	.6122	.4537	.2952	.1368	.9783
420770	21.8800	22.7216	23.5631	24.4047	25.2462	26.0877	26.9293	27.7708	28.6124	29.4539	30.2954	31.1370	31.9785
773	.8802	.7217	.5633	.4048	.2464	.0879	.9295	.7710	.6126	.4541	.2957	.1372	.9787
776	.8804	.7219	.5635	.4050	.2466	.0881	.9297	.7712	.6128	.4543	.2959	.1374	.9790
779	.8805	.7221	.5636	.4052	.2467	.0883	.9299	.7714	.6130	.4545	.2961	.1376	.9792
782	.8807	.7222	.5638	.4054	.2469	.0885	.9300	.7716	.6132	.4547	.2963	.1379	.9794
420785	21.8808	22.7224	23.5640	24.4055	25.2471	26.0887	26.9302	27.7718	28.6134	29.4550	30.2965	31.1381	31.9797
788	.8810	.7226	.5641	.4057	.2473	.0889	.9304	.7720	.6136	.4552	.2967	.1383	.9799
791	.8811	.7227	.5643	.4059	.2475	.0890	.9306	.7722	.6138	.4554	.2970	.1385	.9801
794	.8813	.7229	.5645	.4061	.2476	.0892	.9308	.7724	.6140	.4556	.2972	.1388	.9803
797	.8814	.7230	.5646	.4062	.2478	.0894	.9310	.7726	.6142	.4558	.2974	.1390	.9806
420800	21.8816	22.7232	23.5648	24.4064	25.2480	26.0896	26.9312	27.7728	28.6144	29.4560	30.2976	31.1392	31.9808

MEGACYCLES PER SECOND

HARMONICS

BASIC FREQ.	78	80	82	84	86	88	90	92	94	96	100	104	108
420500	32.7990	33.6400	34.4810	35.3220	36.1630	37.0040	37.8450	38.6860	39.5270	40.3680	42.0500	43.7320	45.4140
503	.7992	.6402	.4812	.3223	.1633	.0043	.8453	.6863	.5273	.3683	.0503	.7323	.4143
506	.7995	.6405	.4815	.3225	.1635	.0045	.8455	.6866	.5276	.3686	.0506	.7326	.4146
509	.7997	.6407	.4817	.3228	.1638	.0048	.8458	.6868	.5278	.3689	.0509	.7329	.4150
512	.7999	.6410	.4820	.3230	.1640	.0051	.8461	.6871	.5281	.3692	.0512	.7332	.4153
420515	32.8002	33.6412	34.4822	35.3233	36.1643	37.0053	37.8464	38.6874	39.5284	40.3694	42.0515	43.7336	45.4156
518	.8004	.6414	.4825	.3235	.1645	.0056	.8466	.6877	.5287	.3697	.0518	.7339	.4159
521	.8006	.6417	.4827	.3238	.1648	.0058	.8469	.6879	.5290	.3700	.0521	.7342	.4163
524	.8009	.6419	.4830	.3240	.1651	.0061	.8472	.6882	.5293	.3703	.0524	.7345	.4166
527	.8011	.6422	.4832	.3243	.1653	.0064	.8474	.6885	.5295	.3706	.0527	.7348	.4169
420530	32.8013	33.6424	34.4835	35.3245	36.1656	37.0066	37.8477	38.6888	39.5298	40.3709	42.0530	43.7351	45.4172
533	.8016	.6426	.4837	.3248	.1658	.0069	.8480	.6890	.5301	.3712	.0533	.7354	.4176
536	.8018	.6429	.4840	.3250	.1661	.0072	.8482	.6893	.5304	.3715	.0536	.7357	.4179
539	.8020	.6431	.4842	.3253	.1664	.0074	.8485	.6896	.5307	.3717	.0539	.7361	.4182
542	.8023	.6434	.4844	.3255	.1666	.0077	.8488	.6899	.5309	.3720	.0542	.7364	.4185
420545	32.8025	33.6436	35.4847	35.3258	36.1669	37.0080	37.8491	38.6901	39.5312	40.3723	42.0545	43.7367	45.4189
548	.8027	.6438	.4849	.3260	.1671	.0082	.8493	.6904	.5315	.3726	.0548	.7370	.4192
551	.8030	.6441	.4852	.3263	.1674	.0085	.8496	.6907	.5318	.3729	.0551	.7373	.4195
554	.8032	.6443	.4854	.3265	.1676	.0088	.8499	.6910	.5321	.3732	.0554	.7376	.4198
557	.8034	.6446	.4857	.3268	.1679	.0090	.8501	.6912	.5324	.3735	.0557	.7379	.4202
420560	32.8037	33.6448	34.4859	35.3270	36.1682	37.0093	37.8504	38.6915	39.5326	40.3738	42.0560	43.7382	45.4205
563	.8039	.6450	.4862	.3273	.1684	.0095	.8507	.6918	.5329	.3740	.0563	.7386	.4208
566	.8041	.6453	.4864	.3275	.1687	.0098	.8509	.6921	.5332	.3743	.0566	.7389	.4211
569	.8044	.6455	.4867	.3278	.1689	.0101	.8512	.6923	.5335	.3746	.0569	.7392	.4215
572	.8046	.6458	.4869	.3280	.1692	.0103	.8515	.6926	.5338	.3749	.0572	.7395	.4218
420575	32.8049	33.6460	34.4872	35.3283	36.1695	37.0106	37.8518	38.6929	39.5341	40.3752	42.0575	43.7398	45.4221
578	.8051	.6462	.4874	.3286	.1697	.0109	.8520	.6932	.5343	.3755	.0578	.7401	.4224
581	.8053	.6465	.4876	.3288	.1700	.0111	.8523	.6935	.5346	.3758	.0581	.7404	.4227
584	.8056	.6467	.4879	.3291	.1702	.0114	.8526	.6937	.5349	.3761	.0584	.7407	.4231
587	.8058	.6470	.4881	.3293	.1705	.0117	.8528	.6940	.5352	.3764	.0587	.7410	.4234
420590	32.8060	33.6472	34.4884	35.3296	36.1707	37.0119	37.8531	38.6943	39.5355	40.3766	42.0590	43.7414	45.4237
593	.8063	.6474	.4886	.3298	.1710	.0122	.8534	.6946	.5357	.3769	.0593	.7417	.4240
596	.8065	.6477	.4889	.3301	.1713	.0124	.8536	.6948	.5360	.3772	.0596	.7420	.4244
599	.8067	.6479	.4891	.3303	.1715	.0127	.8539	.6951	.5363	.3775	.0599	.7423	.4247
602	.8070	.6482	.4894	.3306	.1718	.0130	.8542	.6954	.5366	.3778	.0602	.7426	.4250
420605	32.8072	33.6484	34.4896	35.3308	36.1720	37.0132	37.8545	38.6957	39.5369	40.3781	42.0605	43.7429	45.4253
608	.8074	.6486	.4899	.3311	.1723	.0135	.8547	.6959	.5372	.3784	.0608	.7432	.4257
611	.8077	.6489	.4901	.3313	.1725	.0138	.8550	.6962	.5374	.3787	.0611	.7435	.4260
614	.8079	.6491	.4903	.3316	.1728	.0140	.8553	.6965	.5377	.3789	.0614	.7439	.4263
617	.8081	.6494	.4906	.3318	.1731	.0143	.8555	.6968	.5380	.3792	.0617	.7442	.4266
420620	32.8084	33.6496	34.4908	35.3321	36.1733	37.0146	37.8558	38.6970	39.5383	40.3795	42.0620	43.7445	45.4270
623	.8086	.6498	.4911	.3323	.1736	.0148	.8561	.6973	.5386	.3798	.0623	.7448	.4273
626	.8088	.6501	.4913	.3326	.1738	.0151	.8563	.6976	.5388	.3801	.0626	.7451	.4276
629	.8091	.6503	.4916	.3328	.1741	.0154	.8566	.6979	.5391	.3804	.0629	.7454	.4279
632	.8093	.6506	.4918	.3331	.1744	.0156	.8569	.6981	.5394	.3807	.0632	.7457	.4283
420635	32.8095	33.6508	34.4921	35.3333	36.1746	37.0159	37.8572	38.6984	39.5397	40.3810	42.0635	43.7460	45.4286
638	.8098	.6510	.4923	.3336	.1749	.0161	.8574	.6987	.5400	.3812	.0638	.7464	.4289
641	.8100	.6513	.4926	.3338	.1751	.0164	.8577	.6990	.5403	.3815	.0641	.7467	.4292
644	.8102	.6515	.4928	.3341	.1754	.0167	.8580	.6992	.5405	.3818	.0644	.7470	.4296
647	.8105	.6518	.4931	.3343	.1756	.0169	.8582	.6995	.5408	.3821	.0647	.7473	.4299
420650	32.8107	33.6520	34.4933	35.3346	36.1759	37.0172	37.8585	38.6998	39.5411	40.3824	42.0650	43.7476	45.4302
653	.8109	.6522	.4935	.3349	.1762	.0175	.8588	.7001	.5414	.3827	.0653	.7479	.4305
656	.8112	.6525	.4938	.3351	.1764	.0177	.8590	.7004	.5417	.3830	.0656	.7482	.4308
659	.8114	.6527	.4940	.3354	.1767	.0180	.8593	.7006	.5419	.3833	.0659	.7485	.4312
662	.8116	.6530	.4943	.3356	.1769	.0183	.8596	.7009	.5422	.3836	.0662	.7488	.4315
420665	32.8119	33.6532	34.4945	35.3359	36.1772	37.0185	37.8599	38.7012	39.5425	40.3838	42.0665	43.7492	45.4318
668	.8121	.6534	.4948	.3361	.1774	.0188	.8601	.7015	.5428	.3841	.0668	.7495	.4321
671	.8123	.6537	.4950	.3364	.1777	.0190	.8604	.7017	.5431	.3844	.0671	.7498	.4325
674	.8126	.6539	.4953	.3366	.1780	.0193	.8607	.7020	.5434	.3847	.0674	.7501	.4328
677	.8128	.6542	.4955	.3369	.1782	.0196	.8609	.7023	.5436	.3850	.0677	.7504	.4331
420680	32.8130	33.6544	34.4958	35.3371	36.1785	37.0198	37.8612	38.7026	39.5439	40.3853	42.0680	43.7507	45.4334
683	.8133	.6546	.4960	.3374	.1787	.0201	.8615	.7028	.5442	.3856	.0683	.7510	.4338
686	.8135	.6549	.4963	.3376	.1790	.0204	.8617	.7031	.5445	.3859	.0686	.7513	.4341
689	.8137	.6551	.4965	.3379	.1793	.0206	.8620	.7034	.5448	.3861	.0689	.7517	.4344
692	.8140	.6554	.4967	.3381	.1795	.0209	.8623	.7037	.5450	.3864	.0692	.7520	.4347
420695	32.8142	33.6556	34.4970	35.3384	36.1798	37.0212	37.8626	38.7039	39.5453	40.3867	42.0695	43.7523	45.4351
698	.8144	.6558	.4972	.3386	.1800	.0214	.8628	.7042	.5456	.3870	.0698	.7526	.4354
701	.8147	.6561	.4975	.3389	.1803	.0217	.8631	.7045	.5459	.3873	.0701	.7529	.4357
704	.8149	.6563	.4977	.3391	.1805	.0220	.8634	.7048	.5462	.3876	.0704	.7532	.4360
707	.8151	.6566	.4980	.3394	.1808	.0222	.8636	.7050	.5465	.3879	.0707	.7535	.4364
420710	32.8154	33.6568	34.4982	35.3396	36.1811	37.0225	37.8639	38.7053	39.5467	40.3882	42.0710	43.7538	45.4367
713	.8156	.6570	.4985	.3399	.1813	.0227	.8642	.7056	.5470	.3884	.0713	.7542	.4370
716	.8158	.6573	.4987	.3401	.1816	.0230	.8644	.7059	.5473	.3887	.0716	.7545	.4373
719	.8161	.6575	.4990	.3404	.1818	.0233	.8647	.7061	.5476	.3890	.0719	.7548	.4377
722	.8163	.6578	.4992	.3406	.1821	.0235	.8650	.7064	.5479	.3893	.0722	.7551	.4380
420725	32.8166	33.6580	34.4995	35.3409	36.1824	37.0238	37.8653	38.7067	39.5482	40.3896	42.0725	43.7554	45.4383
728	.8168	.6582	.4997	.3412	.1826	.0241	.8655	.7070	.5484	.3899	.0728	.7557	.4386
731	.8170	.6585	.4999	.3414	.1829	.0243	.8658	.7073	.5487	.3902	.0731	.7560	.4389
734	.8173	.6587	.5002	.3417	.1831	.0246	.8661	.7075	.5490	.3905	.0734	.7563	.4393
737	.8175	.6590	.5004	.3419	.1834	.0249	.8663	.7078	.5493	.3908	.0737	.7566	.4396
420740	32.8177	33.6592	34.5007	35.3422	36.1836	37.0251	37.8666	38.7081	39.5496	40.3910	42.0740	43.7570	45.4399
743	.8180	.6594	.5009	.3424	.1839	.0254	.8669	.7084	.5498	.3913	.0743	.7573	.4402
746	.8182	.6597	.5012	.3427	.1842	.0256	.8671	.7086	.5501	.3916	.0746	.7576	.4406
749	.8184	.6599	.5014	.3429	.1844	.0259	.8674	.7089	.5504	.3919	.0749	.7579	.4409
752	.8187	.6602	.5017	.3432	.1847	.0262	.8677	.7092	.5507	.3922	.0752	.7582	.4412
420755	32.8189	33.6604	34.5019	35.3434	36.1849	37.0264	37.8680	38.7095	39.5510	40.3925	42.0755	43.7585	45.4415
758	.8191	.6606	.5022	.3437	.1852	.0267	.8682	.7097	.5513	.3928	.0758	.7588	.4419
761	.8194	.6609	.5024	.3439	.1854	.0270	.8685	.7100	.5515	.3931	.0761	.7591	.4422
764	.8196	.6611	.5026	.3442	.1857	.0272	.8688	.7103	.5518	.3933	.0764	.7595	.4425
767	.8198	.6614	.5029	.3444	.1860	.0275	.8690	.7106	.5521	.3936	.0767	.7598	.4428
420770	32.8201	33.6616	34.5031	35.3447	36.1862	37.0278	37.8693	38.7108	39.5524	40.3939	42.0770	43.7601	45.4432
773	.8203	.6618	.5034	.3449	.1865	.0280	.8696	.7111	.5527	.3942	.0773	.7604	.4435
776	.8205	.6621	.5036	.3452	.1867	.0283	.8698	.7114	.5529	.3945	.0776	.7607	.4438
779	.8208	.6623	.5039	.3454	.1870	.0286	.8701	.7117	.5532	.3948	.0779	.7610	.4441
782	.8210	.6626	.5041	.3457	.1873	.0288	.8704	.7119	.5535	.3951	.0782	.7613	.4445
420785	32.8212	33.6628	34.5044	35.3459	36.1875	37.0291	37.8707	38.7122	39.5538	40.3954	42.0785	43.7616	45.4448
788	.8215	.6630	.5046	.3462	.1878	.0293	.8709	.7125	.5541	.3956	.0788	.7620	.4451
791	.8217	.6633	.5049	.3464	.1880	.0296	.8712	.7128	.5544	.3959	.0791	.7623	.4454
794	.8219	.6635	.5051	.3467	.1883	.0299	.8715	.7130	.5546	.3962	.0794	.7626	.4458
797	.8222	.6638	.5054	.3469	.1885	.0301	.8717	.7133	.5549	.3965	.0797	.7629	.4461
420800	32.8224	33.6640	34.5056	35.3472	36.1888	37.0304	37.8720	38.7136	39.5552	40.3968	42.0800	43.7632	45.4464

MEGACYCLES PER SECOND

H A R M O N I C S

BASIC FREQ.	52	54	56	58	60	62	64	66	68	70	72	74	76
420800	21.8816	22.7232	23.5648	24.4064	25.2480	26.0896	26.9312	27.7728	28.6144	29.4560	30.2976	31.1392	31.9808
803	.8818	.7234	.5650	.4066	.2482	.0898	.9314	.7730	.6146	.4562	.2978	.1394	.9810
806	.8819	.7235	.5651	.4067	.2484	.0900	.9316	.7732	.6148	.4564	.2980	.1396	.9813
809	.8821	.7237	.5653	.4069	.2485	.0902	.9318	.7774	.6150	.4566	.2982	.1399	.9815
812	.8822	.7238	.5655	.4071	.2487	.0903	.9320	.7736	.6152	.4568	.2985	.1401	.9817
420815	21.8824	22.7240	23.5656	24.4073	25.2489	26.0905	26.9322	27.7738	28.6154	29.4571	30.2987	31.1403	31.9819
818	.8825	.7242	.5658	.4074	.2491	.0907	.9324	.7740	.6156	.4573	.2989	.1405	.9822
821	.8827	.7243	.5660	.4076	.2493	.0909	.9325	.7742	.6158	.4575	.2991	.1408	.9824
824	.8828	.7245	.5661	.4078	.2494	.0911	.9327	.7744	.6160	.4577	.2993	.1410	.9826
827	.8830	.7247	.5663	.4080	.2496	.0913	.9329	.7746	.6162	.4579	.2995	.1412	.9829
420830	21.8832	22.7248	23.5665	24.4081	25.2498	26.0915	26.9331	27.7748	28.6164	29.4581	30.2998	31.1414	31.9831
833	.8833	.7250	.5666	.4083	.2500	.0916	.9333	.7750	.6166	.4583	.3000	.1416	.9833
836	.8835	.7251	.5668	.4085	.2502	.0918	.9335	.7752	.6168	.4585	.3002	.1419	.9835
839	.8836	.7253	.5670	.4087	.2503	.0920	.9337	.7754	.6171	.4587	.3004	.1421	.9838
842	.8838	.7255	.5672	.4088	.2505	.0922	.9339	.7756	.6173	.4589	.3006	.1423	.9840
420845	21.8839	22.7256	23.5673	24.4090	25.2507	26.0924	26.9341	27.7758	28.6175	29.4592	30.3008	31.1425	31.9842
848	.8841	.7258	.5675	.4092	.2509	.0926	.9343	.7760	.6177	.4594	.3011	.1428	.9844
851	.8843	.7260	.5677	.4094	.2511	.0928	.9345	.7762	.6179	.4596	.3013	.1430	.9847
854	.8844	.7261	.5678	.4095	.2512	.0929	.9347	.7764	.6181	.4598	.3015	.1432	.9849
857	.8846	.7263	.5680	.4097	.2514	.0931	.9348	.7766	.6183	.4600	.3017	.1434	.9851
420860	21.8847	22.7264	23.5682	24.4099	25.2516	26.0933	26.9350	27.7768	28.6185	29.4602	30.3019	31.1436	31.9854
863	.8849	.7266	.5683	.4101	.2518	.0935	.9352	.7770	.6187	.4604	.3021	.1439	.9856
866	.8850	.7268	.5685	.4102	.2520	.0937	.9354	.7772	.6189	.4606	.3024	.1441	.9858
869	.8852	.7269	.5687	.4104	.2521	.0939	.9356	.7774	.6191	.4608	.3026	.1443	.9860
872	.8853	.7271	.5688	.4106	.2523	.0941	.9358	.7776	.6193	.4610	.3028	.1445	.9863
420875	21.8855	22.7273	23.5690	24.4108	25.2525	26.0943	26.9360	27.7778	28.6195	29.4613	30.3030	31.1448	31.9865
878	.8857	.7274	.5692	.4109	.2527	.0944	.9362	.7779	.6197	.4615	.3032	.1450	.9867
881	.8858	.7276	.5693	.4111	.2529	.0946	.9364	.7781	.6199	.4617	.3034	.1452	.9870
884	.8860	.7277	.5695	.4113	.2530	.0948	.9366	.7783	.6201	.4619	.3036	.1454	.9872
887	.8861	.7279	.5697	.4114	.2532	.0950	.9368	.7785	.6203	.4621	.3039	.1456	.9874
420890	21.8863	22.7281	23.5698	24.4116	25.2534	26.0952	26.9370	27.7787	28.6205	29.4623	30.3041	31.1459	31.9876
893	.8864	.7282	.5700	.4118	.2536	.0954	.9372	.7789	.6207	.4625	.3043	.1461	.9879
896	.8866	.7284	.5702	.4120	.2538	.0956	.9373	.7791	.6209	.4627	.3045	.1463	.9881
899	.8867	.7285	.5703	.4121	.2539	.0957	.9375	.7793	.6211	.4629	.3047	.1465	.9883
902	.8869	.7287	.5705	.4123	.2541	.0959	.9377	.7795	.6213	.4631	.3049	.1467	.9886
420905	21.8871	22.7289	23.5707	24.4125	25.2543	26.0961	26.9379	27.7797	28.6215	29.4634	30.3052	31.1470	31.9888
908	.8872	.7290	.5708	.4127	.2545	.0963	.9381	.7799	.6217	.4636	.3054	.1472	.9890
911	.8874	.7292	.5710	.4128	.2547	.0965	.9383	.7801	.6219	.4638	.3056	.1474	.9892
914	.8875	.7294	.5712	.4130	.2548	.0967	.9385	.7803	.6222	.4640	.3058	.1476	.9895
917	.8877	.7295	.5714	.4132	.2550	.0969	.9387	.7805	.6224	.4642	.3060	.1479	.9897
420920	21.8878	22.7297	23.5715	24.4134	25.2552	26.0970	26.9389	27.7807	28.6226	29.4644	30.3062	31.1481	31.9899
923	.8880	.7298	.5717	.4135	.2554	.0972	.9391	.7809	.6228	.4646	.3065	.1483	.9901
926	.8882	.7300	.5719	.4137	.2556	.0974	.9393	.7811	.6230	.4648	.3067	.1485	.9904
929	.8883	.7302	.5720	.4139	.2557	.0976	.9395	.7813	.6232	.4650	.3069	.1487	.9906
932	.8885	.7303	.5722	.4141	.2559	.0978	.9396	.7815	.6234	.4652	.3071	.1490	.9908
420935	21.8886	22.7305	23.5724	24.4142	25.2561	26.0980	26.9398	27.7817	28.6236	29.4655	30.3073	31.1492	31.9911
938	.8888	.7307	.5725	.4144	.2563	.0982	.9400	.7819	.6238	.4657	.3075	.1494	.9913
941	.8889	.7308	.5727	.4146	.2565	.0983	.9402	.7821	.6240	.4659	.3078	.1496	.9915
944	.8891	.7310	.5729	.4148	.2566	.0985	.9404	.7823	.6242	.4661	.3080	.1499	.9917
947	.8892	.7311	.5730	.4149	.2568	.0987	.9406	.7825	.6244	.4663	.3082	.1501	.9920
420950	21.8894	22.7313	23.5732	24.4151	25.2570	26.0989	26.9408	27.7827	28.6246	29.4665	30.3084	31.1503	31.9922
953	.8896	.7315	.5734	.4153	.2572	.0991	.9410	.7829	.6248	.4667	.3086	.1505	.9924
956	.8897	.7316	.5735	.4154	.2574	.0993	.9412	.7831	.6250	.4669	.3088	.1507	.9927
959	.8899	.7318	.5737	.4156	.2575	.0995	.9414	.7833	.6252	.4671	.3090	.1510	.9929
962	.8900	.7319	.5739	.4158	.2577	.0996	.9416	.7835	.6254	.4673	.3093	.1512	.9931
420965	21.8902	22.7321	23.5740	24.4160	25.2579	26.0998	26.9418	27.7837	28.6256	29.4676	30.3095	31.1514	31.9933
968	.8903	.7323	.5742	.4161	.2581	.1000	.9420	.7839	.6258	.4678	.3097	.1516	.9936
971	.8905	.7324	.5744	.4163	.2583	.1002	.9421	.7841	.6260	.4680	.3099	.1519	.9938
974	.8906	.7326	.5745	.4165	.2584	.1004	.9423	.7843	.6262	.4682	.3101	.1521	.9940
977	.8908	.7328	.5747	.4167	.2586	.1006	.9425	.7845	.6264	.4684	.3103	.1523	.9943
420980	21.8910	22.7329	23.5749	24.4168	25.2588	26.1008	26.9427	27.7847	28.6266	29.4686	30.3106	31.1525	31.9945
983	.8911	.7331	.5750	.4170	.2590	.1009	.9429	.7849	.6268	.4688	.3108	.1527	.9947
986	.8913	.7332	.5752	.4172	.2592	.1001	.9431	.7851	.6270	.4690	.3110	.1530	.9949
989	.8914	.7334	.5754	.4174	.2593	.1013	.9433	.7853	.6273	.4692	.3112	.1532	.9952
992	.8916	.7336	.5756	.4175	.2595	.1015	.9435	.7855	.6275	.4694	.3114	.1534	.9954
420995	21.8917	22.7337	23.5757	24.4177	25.2597	26.1017	26.9437	27.7857	28.6277	29.4697	30.3116	31.1536	31.9956
998	.8919	.7339	.5759	.4179	.2599	.1019	.9439	.7859	.6279	.4699	.3119	.1539	.9958
421001	.8921	.7341	.5761	.4181	.2601	.1021	.9441	.7861	.6281	.4701	.3121	.1541	.9961
004	.8922	.7342	.5762	.4182	.2602	.1022	.9443	.7863	.6283	.4703	.3123	.1543	.9963
007	.8924	.7344	.5764	.4184	.2604	.1024	.9444	.7865	.6285	.4705	.3125	.1545	.9965
420010	21.8925	22.7345	23.5766	24.4186	25.2606	26.1026	26.9446	27.7867	28.6287	29.4707	30.3127	31.1547	31.9968
013	.8927	.7347	.5767	.4188	.2608	.1028	.9448	.7869	.6289	.4709	.3129	.1550	.9970
016	.8928	.7349	.5769	.4189	.2610	.1030	.9450	.7871	.6291	.4711	.3132	.1552	.9972
019	.8930	.7350	.5771	.4191	.2611	.1032	.9452	.7873	.6293	.4713	.3134	.1554	.9974
022	.8931	.7352	.5772	.4193	.2613	.1034	.9454	.7875	.6295	.4715	.3136	.1556	.9977
421025	21.8933	22.7354	23.5774	24.4195	25.2615	26.1036	26.9456	27.7877	28.6297	29.4718	30.3138	31.1559	31.9979
028	.8935	.7355	.5776	.4196	.2617	.1037	.9458	.7878	.6299	.4720	.3140	.1561	.9981
031	.8936	.7357	.5777	.4198	.2619	.1039	.9460	.7880	.6301	.4722	.3142	.1563	.9984
034	.8938	.7358	.5779	.4200	.2620	.1041	.9462	.7882	.6303	.4724	.3144	.1565	.9986
037	.8939	.7360	.5781	.4201	.2622	.1043	.9464	.7884	.6305	.4726	.3147	.1567	.9988
421040	21.8941	22.7362	23.5782	24.4203	25.2624	26.1045	26.9466	27.7886	28.6307	29.4728	30.3149	31.1570	31.9990
043	.8942	.7363	.5784	.4205	.2626	.1047	.9468	.7888	.6309	.4730	.3151	.1572	.9993
046	.8944	.7365	.5786	.4207	.2628	.1049	.9469	.7890	.6311	.4732	.3153	.1574	.9995
049	.8945	.7366	.5787	.4208	.2629	.1050	.9471	.7892	.6313	.4734	.3155	.1576	.9997
052	.8947	.7368	.5789	.4210	.2631	.1052	.9473	.7894	.6315	.4736	.3157	.1578	32.0000
421055	21.8949	22.7370	23.5791	24.4212	25.2633	26.1054	26.9475	27.7896	28.6317	29.4739	30.3160	31.1581	32.0002
058	.8950	.7371	.5792	.4214	.2635	.1056	.9477	.7898	.6319	.4741	.3162	.1583	.0004
061	.8952	.7373	.5794	.4215	.2637	.1058	.9479	.7900	.6321	.4743	.3164	.1585	.0006
064	.8953	.7375	.5796	.4217	.2638	.1060	.9481	.7902	.6324	.4745	.3166	.1587	.0009
067	.8955	.7376	.5798	.4219	.2640	.1062	.9483	.7904	.6326	.4747	.3168	.1590	.0011
421070	21.8956	22.7378	23.5799	24.4221	25.2642	26.1063	26.9485	27.7906	28.6328	29.4749	30.3170	31.1592	32.0013
073	.8958	.7379	.5801	.4222	.2644	.1065	.9487	.7908	.6330	.4751	.3173	.1594	.0015
076	.8960	.7381	.5803	.4224	.2646	.1067	.9489	.7910	.6332	.4753	.3175	.1596	.0018
079	.8961	.7383	.5804	.4226	.2647	.1069	.9491	.7912	.6334	.4755	.3177	.1598	.0020
082	.8963	.7384	.5806	.4228	.2649	.1071	.9492	.7914	.6336	.4757	.3179	.1601	.0022
421085	21.8964	22.7386	23.5808	24.4229	25.2651	26.1073	26.9494	27.7916	28.6338	29.4760	30.3181	31.1603	32.0025
088	.8966	.7388	.5809	.4231	.2653	.1075	.9496	.7918	.6340	.4762	.3183	.1605	.0027
091	.8967	.7389	.5811	.4233	.2655	.1076	.9498	.7920	.6342	.4764	.3186	.1607	.0029
094	.8969	.7391	.5813	.4235	.2656	.1078	.9500	.7922	.6344	.4766	.3188	.1610	.0031
097	.8970	.7392	.5814	.4236	.2658	.1080	.9502	.7924	.6346	.4768	.3190	.1612	.0034
421100	21.8972	22.7394	23.5816	24.4238	25.2660	26.1082	26.9504	27.7926	28.6348	29.4770	30.3192	31.1614	32.0039

MEGACYCLES PER SECOND

HARMONICS

BASIC FREQ.	78	80	82	84	86	88	90	92	94	96	100	104	108
420800	32.8224	33.6640	34.5056	35.3472	36.1888	37.0304	37.8720	38.7136	39.5552	40.3968	42.0800	43.7632	45.4464
803	.8226	.6642	.5058	.3475	.1891	.0307	.8723	.7139	.5555	.3971	.0803	.7635	.4467
806	.8229	.6645	.5061	.3477	.1893	.0309	.8725	.7142	.5558	.3974	.0806	.7638	.4470
809	.8231	.6647	.5063	.3480	.1896	.0312	.8728	.7144	.5560	.3977	.0809	.7641	.4474
812	.8233	.6650	.5066	.3482	.1898	.0315	.8731	.7147	.5563	.3980	.0812	.7644	.4477
420815	32.8236	33.6652	34.5068	35.3485	36.1901	37.0317	37.8734	38.7150	39.5566	40.3982	42.0815	43.7648	45.4480
818	.8238	.6654	.5071	.3487	.1903	.0320	.8736	.7153	.5569	.3985	.0818	.7651	.4483
821	.8240	.6657	.5073	.3490	.1906	.0322	.8739	.7155	.5572	.3988	.0821	.7654	.4487
824	.8243	.6659	.5076	.3492	.1909	.0325	.8742	.7158	.5575	.3391	.0824	.7657	.4490
827	.8245	.6662	.5078	.3495	.1911	.0328	.8744	.7161	.5577	.3994	.0827	.7660	.4493
420830	32.8247	33.6664	34.5081	35.3497	36.1914	37.0330	37.8747	38.7164	39.5580	40.3997	42.0830	43.7663	45.4496
833	.8250	.6666	.5083	.3500	.1916	.0333	.8750	.7166	.5583	.4000	.0833	.7666	.4500
836	.8252	.6669	.5086	.3502	.1919	.0336	.8752	.7169	.5586	.4003	.0836	.7669	.4503
839	.8254	.6671	.5088	.3505	.1922	.0338	.8755	.7172	.5589	.4005	.0839	.7673	.4506
842	.8257	.6674	.5090	.3507	.1924	.0341	.8758	.7175	.5591	.4008	.0842	.7676	.4509
420845	32.8259	33.6676	34.5093	35.3510	36.1927	37.0344	37.8761	38.7177	39.5594	40.4011	42.2845	43.7679	45.4513
848	.8261	.6678	.5095	.3512	.1929	.0346	.8763	.7180	.5597	.4014	.0848	.7682	.4516
851	.8264	.6681	.5098	.3515	.1932	.0349	.8766	.7183	.5600	.4017	.0851	.7685	.4519
854	.8266	.6683	.5100	.3517	.1934	.0352	.8769	.7186	.5603	.4020	.0854	.7688	.4522
857	.8268	.6686	.5103	.3520	.1937	.0354	.8771	.7188	.5606	.4023	.0857	.7691	.4526
420860	32.8271	33.6688	34.5105	35.3522	36.1940	37.0357	37.8774	38.7191	39.5608	40.4026	42.0860	43.7694	45.4529
863	.8273	.6690	.5108	.3525	.1942	.0359	.8777	.7194	.5611	.4028	.0863	.7698	.4532
866	.8275	.6693	.5110	.3527	.1945	.0362	.8779	.7197	.5614	.4031	.0866	.7701	.4535
869	.8278	.6695	.5113	.3530	.1947	.0365	.8782	.7199	.5617	.4034	.0869	.7704	.4539
872	.8280	.6698	.5115	.3532	.1950	.0367	.8785	.7202	.5620	.4037	.0872	.7707	.4542
420875	32.8283	33.6700	34.5118	35.3535	36.1953	37.0370	37.8788	38.7205	39.5623	40.4040	42.0875	43.7710	45.4545
878	.8285	.6702	.5120	.3538	.1955	.0373	.8790	.7208	.5625	.4043	.0878	.7713	.4548
881	.8287	.6705	.5122	.3540	.1958	.0375	.8793	.7211	.5628	.4046	.0881	.7716	.4551
884	.8290	.6707	.5125	.3543	.1960	.0378	.8796	.7213	.5631	.4049	.0884	.7719	.4555
887	.8292	.6710	.5127	.3545	.1963	.0381	.8798	.7216	.5634	.4052	.0887	.7722	.4558
420890	32.8294	33.6712	34.5130	35.3548	36.1965	37.0383	37.8801	38.7219	39.5637	40.4054	42.0890	43.7726	45.4561
893	.8297	.6714	.5132	.3550	.1968	.0386	.8804	.7222	.5639	.4057	.0893	.7729	.4564
896	.8299	.6717	.5135	.3553	.1971	.0388	.8806	.7224	.5642	.4060	.0896	.7732	.4568
899	.8301	.6719	.5137	.3555	.1973	.0391	.8809	.7227	.5645	.4063	.0899	.7735	.4571
902	.8304	.6722	.5140	.3558	.1976	.0394	.8812	.7230	.5648	.4066	.0902	.7738	.4574
420905	32.8306	33.6724	34.5142	35.3560	36.1978	37.0396	37.8815	38.7233	39.5651	40.4069	42.0905	43.7741	45.4577
908	.8308	.6726	.5145	.3563	.1981	.0399	.8817	.7235	.5654	.4072	.0908	.7744	.4581
911	.8311	.6729	.5147	.3565	.1983	.0402	.8820	.7238	.5656	.4075	.0911	.7747	.4584
914	.8313	.6731	.5149	.3568	.1986	.0404	.8823	.7241	.5659	.4077	.0914	.7751	.4587
917	.8315	.6734	.5152	.3570	.1989	.0407	.8825	.7244	.5662	.4080	.0917	.7754	.4590
420920	32.8318	33.6736	34.5154	35.3573	36.1991	37.0410	37.8828	38.7246	39.5665	40.4083	42.0920	43.7757	45.4594
923	.8320	.6738	.5157	.3575	.1994	.0412	.8831	.7249	.5668	.4086	.9923	.7760	.4597
926	.8322	.6741	.5159	.3578	.1996	.0415	.8833	.7252	.5670	.4089	.0926	.7763	.4600
929	.8325	.6743	.5162	.3580	.1999	.0418	.8836	.7255	.5673	.4092	.0929	.7766	.4603
932	.8327	.6746	.5164	.3583	.2002	.0420	.8839	.7257	.5676	.4095	.0932	.7769	.4607
420935	32.8329	33.6748	34.5167	35.3585	36.2004	37.0423	37.8842	38.7260	39.5679	40.4098	42.0935	43.7772	45.4610
938	.8332	.6750	.5169	.3588	.2007	.0425	.8844	.7263	.5682	.4100	.0938	.7776	.4613
941	.8334	.6753	.5172	.3590	.2009	.0428	.8847	.7266	.5685	.4103	.0941	.7779	.4616
944	.8336	.6755	.5174	.3593	.2012	.0431	.8850	.7268	.5687	.4106	.0944	.7782	.4620
947	.8339	.6758	.5177	.3595	.2014	.0433	.8852	.7271	.5690	.4109	.0947	.7785	.4623
420950	32.8341	33.6760	34.5179	35.3598	36.2017	37.0436	37.8855	38.7274	39.5693	40.4112	42.0950	43.7788	45.4626
953	.8343	.6762	.5181	.3601	.2020	.0439	.8858	.7277	.5696	.4115	.0953	.7791	.4629
956	.8346	.6765	.5184	.3603	.2022	.0441	.8860	.7280	.5699	.4118	.0956	.7794	.4632
959	.8348	.6767	.5186	.3606	.2025	.0444	.8863	.7282	.5701	.4121	.0959	.7797	.4636
962	.8350	.6770	.5189	.3608	.2027	.0447	.8866	.7285	.5704	.4124	.0962	.7800	.4639
420965	32.8353	33.6772	34.5191	35.3611	36.2030	37.0449	37.8869	38.7288	39.5707	40.4126	42.0965	43.7804	45.4642
968	.8355	.6774	.5194	.3613	.2032	.0452	.8871	.7291	.5710	.4129	.0968	.7807	.4645
971	.8357	.6777	.5196	.3616	.2035	.0454	.8874	.7293	.5713	.4132	.0971	.7810	.4649
974	.8360	.6779	.5199	.3618	.2038	.0457	.8877	.7296	.5716	.4135	.0974	.7813	.4652
977	.8362	.6782	.5201	.3621	.2040	.0460	.8879	.7299	.5718	.4138	.0977	.7816	.4655
420980	32.8364	33.6784	34.5204	35.3623	36.2043	37.0462	37.8882	38.7302	39.5721	40.4141	42.0980	43.7819	45.4658
983	.8367	.6786	.5206	.3626	.2045	.0465	.8885	.7304	.5724	.4144	.0983	.7822	.4662
986	.8369	.6789	.5209	.3628	.2048	.0468	.8887	.7307	.5727	.4147	.0986	.7825	.4665
989	.8371	.6791	.5211	.3631	.2051	.0470	.8890	.7310	.5730	.4149	.0989	.7829	.4668
992	.8374	.6794	.5213	.3633	.2053	.0473	.8893	.7313	.5732	.4152	.0992	.7832	.4671
420995	32.8376	33.6796	34.5216	35.3636	36.2056	37.0476	37.8896	38.7315	39.5735	40.4155	42.0995	43.7835	45.4675
998	.8378	.6798	.5218	.3638	.2058	.0478	.8898	.7318	.5738	.4158	.0998	.7838	.4678
421001	.8381	.6801	.5221	.3641	.2061	.0481	.8901	.7321	.5741	.4161	.1001	.7841	.4681
004	.8383	.6803	.5223	.3643	.2063	.0484	.8904	.7324	.5744	.4164	.1004	.7844	.4684
007	.8385	.6806	.5226	.3646	.2066	.0486	.8906	.7326	.5747	.4167	.1007	.7847	.4688
421010	32.8388	33.6808	34.5228	35.3648	36.2069	37.0489	37.8909	38.7329	39.5749	40.4170	42.1010	43.7850	45.4691
013	.8390	.6810	.5231	.3651	.2071	.0491	.8912	.7332	.5752	.4172	.1013	.7854	.4694
016	.8392	.6813	.5233	.3653	.2074	.0494	.8914	.7335	.5755	.4175	.1016	.7857	.4697
019	.8395	.6815	.5236	.3656	.2076	.0497	.8917	.7337	.5758	.4178	.1019	.7860	.4701
022	.8397	.6818	.5238	.3658	.2079	.0499	.8920	.7340	.5761	.4181	.1022	.7863	.4704
421025	32.8400	33.6820	34.5241	35.3661	36.2082	37.0502	37.8923	38.7343	39.5764	40.4184	42.1025	43.7866	45.4707
028	.8402	.6822	.5243	.3664	.2084	.0505	.8925	.7346	.5766	.4187	.1028	.7869	.4710
031	.8404	.6825	.5245	.3666	.2087	.0507	.8928	.7349	.5769	.4190	.1031	.7872	.4713
034	.8407	.6827	.5248	.3669	.2089	.0510	.8931	.7351	.5772	.4193	.1034	.7875	.4717
037	.8409	.6830	.5250	.3671	.2092	.0513	.8933	.7354	.5775	.4196	.1037	.7878	.4720
421040	32.8411	33.6832	34.5253	35.3674	36.2094	37.0515	37.8936	38.7357	39.5778	40.4198	42.1040	43.7882	45.4723
043	.8414	.6834	.5255	.3676	.2097	.0518	.8939	.7360	.5780	.4201	.1043	.7885	.4726
046	.8416	.6837	.5258	.3679	.2100	.0520	.8941	.7362	.5783	.4204	.1046	.7888	.4730
049	.8418	.6839	.5260	.3681	.2102	.0523	.8944	.7365	.5786	.4207	.1049	.7891	.4733
052	.8421	.6842	.5263	.3684	.2105	.0526	.8947	.7368	.5789	.4210	.1052	.7894	.4736
421055	32.8423	33.6844	34.5265	35.3686	36.2107	37.0528	37.8950	38.7371	39.5792	40.4213	42.1055	43.7897	45.4739
058	.8425	.6846	.5268	.3689	.2110	.0531	.8952	.7373	.5795	.4216	.1058	.7900	.4743
061	.8428	.6849	.5270	.3691	.2112	.0534	.8955	.7376	.5797	.4219	.1061	.7903	.4746
064	.8430	.6851	.5272	.3694	.2115	.0536	.8958	.7379	.5800	.4221	.1064	.7907	.4749
067	.8432	.6854	.5275	.3696	.2118	.0539	.8960	.7382	.5803	.4224	.1067	.7910	.4752
421070	32.8435	33.6856	34.5277	35.3699	36.2120	37.0542	37.8963	38.7384	39.5806	40.4227	42.1070	43.7913	45.4756
073	.8437	.6858	.5280	.3701	.2123	.0544	.8966	.7387	.5809	.4230	.1073	.7916	.4759
076	.8439	.6861	.5282	.3704	.2125	.0547	.8968	.7390	.5811	.4233	.1076	.7919	.4762
079	.8442	.6863	.5285	.3706	.2128	.0550	.8971	.7393	.5814	.4236	.1079	.7922	.4765
082	.8444	.6866	.5287	.3709	.2131	.0552	.8974	.7395	.5817	.4239	.1082	.7925	.4769
421085	32.8446	33.6868	34.5290	35.3711	36.2133	37.0555	37.8977	38.7398	39.5820	40.4242	42.1085	43.7928	45.4772
088	.8449	.6870	.5292	.3714	.2136	.0557	.8979	.7401	.5823	.4244	.1088	.7932	.4775
091	.8451	.6873	.5295	.3716	.2138	.0560	.8982	.7404	.5826	.4247	.1091	.7935	.4778
094	.8453	.6875	.5297	.3719	.2141	.0563	.8985	.7406	.5828	.4250	.1094	.7938	.4782
097	.8456	.6878	.5300	.3721	.2143	.0565	.8987	.7409	.5831	.4253	.1097	.7941	.4785
421100	32.8458	33.6880	34.5302	35.3724	36.2146	37.0568	37.8990	38.7412	39.5834	40.4256	42.1100	43.7944	45.4788

HARMONICS

BASIC FREQ.	52	54	56	58	60	62	64	66	68	70	72	74	76
421100	21.8972	22.7394	23.5816	24.4238	25.2660	26.1082	26.9504	27.7926	28.6348	29.4770	30.3192	31.1614	32.0036
103	.8974	.7396	.5818	.4240	.2662	.1084	.9506	.7928	.6350	.4772	.3194	.1616	.0038
106	.8975	.7397	.5819	.4241	.2664	.1086	.9508	.7930	.6352	.4774	.3196	.1618	.0041
109	.8977	.7399	.5821	.4243	.2665	.1088	.9510	.7932	.6354	.4776	.3198	.1621	.0043
112	.8978	.7400	.5823	.4245	.2667	.1089	.9512	.7934	.6356	.4778	.3201	.1623	.0045
421115	21.8980	22.7402	23.5824	24.4247	25.2669	26.1091	26.9514	27.7936	28.6358	29.4781	30.3203	31.1625	32.0047
118	.8981	.7404	.5826	.4248	.2671	.1093	.9516	.7939	.6360	.4783	.3205	.1627	.0050
121	.8983	.7405	.5828	.4250	.2673	.1095	.9517	.7940	.6362	.4785	.3207	.1630	.0052
124	.8984	.7407	.5829	.4252	.2674	.1097	.9519	.7942	.6364	.4787	.3209	.1632	.0054
127	.8986	.7409	.5831	.4254	.2676	.1099	.9521	.7944	.6366	.4789	.3211	.1634	.0057
421130	21.8988	22.7410	23.5833	24.4255	25.2678	26.1101	26.9523	27.7946	28.6368	29.4791	30.3214	31.1636	32.0059
133	.8989	.7412	.5834	.4257	.2680	.1102	.9525	.7948	.6370	.4793	.3216	.1638	.0061
136	.8991	.7413	.5836	.4259	.2682	.1104	.9527	.7950	.6372	.4795	.3218	.1641	.0063
139	.8992	.7415	.5838	.4261	.2683	.1106	.9529	.7952	.6375	.4797	.3220	.1643	.0066
142	.8994	.7417	.5840	.4262	.2685	.1108	.9531	.7954	.6377	.4799	.3222	.1645	.0068
421145	21.8995	22.7418	23.5841	24.4264	25.2687	26.1110	26.9533	27.7956	28.6379	29.4802	30.3224	31.1647	32.0070
148	.8997	.7420	.5843	.4266	.2689	.1112	.9535	.7958	.6381	.4804	.3227	.1650	.0072
151	.8999	.7422	.5845	.4268	.2691	.1114	.9537	.7960	.6383	.4806	.3229	.1652	.0075
154	.9000	.7423	.5846	.4269	.2692	.1115	.9539	.7962	.6385	.4808	.3231	.1654	.0077
157	.9002	.7425	.5848	.4271	.2694	.1117	.9540	.7964	.6387	.4810	.3233	.1656	.0079
421160	21.9003	22.7426	23.5850	24.4273	25.2696	26.1119	26.9542	27.7966	28.6389	29.4812	30.3235	31.1658	32.0082
163	.9005	.7428	.5851	.4275	.2698	.1121	.9544	.7968	.6391	.4814	.3237	.1661	.0084
166	.9006	.7430	.5853	.4276	.2700	.1123	.9546	.7970	.6393	.4816	.3240	.1663	.0086
169	.9008	.7431	.5855	.4278	.2701	.1125	.9548	.7972	.6395	.4818	.3242	.1665	.0088
172	.9009	.7433	.5856	.4280	.2703	.1127	.9550	.7974	.6397	.4820	.3244	.1667	.0091
421175	21.9011	22.7435	23.5858	24.4282	25.2705	26.1129	26.9552	27.7976	28.6399	29.4823	30.3246	31.1670	32.0093
178	.9013	.7436	.5860	.4283	.2707	.1130	.9554	.7977	.6401	.4825	.3248	.1672	.0095
181	.9014	.7438	.5861	.4285	.2709	.1132	.9556	.7979	.6403	.4827	.3250	.1674	.0098
184	.9016	.7439	.5863	.4287	.2710	.1134	.9558	.7981	.6405	.4829	.3252	.1676	.0100
187	.9017	.7441	.5865	.4288	.2712	.1136	.9560	.7983	.6407	.4831	.3255	.1678	.0102
421190	21.9019	22.7443	23.5866	24.4290	25.2714	26.1138	26.9562	27.7985	28.6409	29.4833	30.3257	31.1681	32.0104
193	.9020	.7444	.5868	.4292	.2716	.1140	.9564	.7987	.6411	.4835	.3259	.1683	.0107
196	.9022	.7446	.5870	.4294	.2718	.1142	.9565	.7989	.6413	.4837	.3261	.1685	.0109
199	.9023	.7447	.5871	.4295	.2719	.1143	.9567	.7991	.6415	.4839	.3263	.1687	.0111
202	.9025	.7449	.5873	.4297	.2721	.1145	.9569	.7993	.6417	.4841	.3265	.1689	.0114
421205	21.9027	22.7451	23.5875	24.4299	25.2723	26.1147	26.9571	27.7995	28.6419	29.4844	30.3268	31.1692	32.0116
208	.9028	.7452	.5876	.4301	.2725	.1149	.9573	.7997	.6421	.4846	.3270	.1694	.0118
211	.9030	.7454	.5878	.4302	.2727	.1151	.9575	.7999	.6423	.4848	.3272	.1696	.0120
214	.9031	.7456	.5880	.4304	.2728	.1153	.9577	.8001	.6426	.4850	.3274	.1698	.0123
217	.9033	.7457	.5882	.4306	.2730	.1155	.9579	.8003	.6428	.4852	.3276	.1701	.0125
421220	21.9034	22.7459	23.5883	24.4308	25.2732	26.1156	26.9581	27.8005	28.6430	29.4854	30.3278	31.1703	32.0127
223	.9036	.7460	.5885	.4309	.2734	.1158	.9583	.8007	.6432	.4856	.3281	.1705	.0129
226	.9038	.7462	.5887	.4311	.2736	.1160	.9585	.8009	.6434	.4858	.3283	.1707	.0132
229	.9039	.7464	.5888	.4313	.2737	.1162	.9587	.8011	.6436	.4860	.3285	.1709	.0134
232	.9041	.7465	.5890	.4315	.2739	.1164	.9588	.8013	.6438	.4862	.3287	.1712	.0136
421235	21.9042	22.7467	23.5892	24.4316	25.2741	26.1166	26.9590	27.8015	28.6440	29.4865	30.3289	31.1714	32.0139
238	.9044	.7469	.5893	.4318	.2743	.1168	.9592	.8017	.6442	.4867	.3291	.1716	.0141
241	.9045	.7470	.5895	.4320	.2745	.1169	.9594	.8019	.6444	.4869	.3294	.1718	.0143
244	.9047	.7472	.5897	.4322	.2746	.1171	.9596	.8021	.6446	.4871	.3296	.1721	.0145
247	.9048	.7473	.5898	.4323	.2748	.1173	.9598	.8023	.6448	.4873	.3298	.1723	.0148
421250	21.9050	22.7475	23.5900	24.4325	25.2750	26.1175	26.9600	27.8025	28.6450	29.4875	30.3300	31.1725	32.0150
253	.9052	.7477	.5902	.4327	.2752	.1177	.9602	.8027	.6452	.4877	.3302	.1727	.0152
256	.9053	.7478	.5903	.4328	.2754	.1179	.9604	.8029	.6454	.4879	.3304	.1729	.0155
259	.9055	.7480	.5905	.4330	.2755	.1181	.9606	.8031	.6456	.4881	.3306	.1732	.0157
262	.9056	.7481	.5907	.4332	.2757	.1182	.9608	.8033	.6458	.4883	.3309	.1734	.0159
421265	21.9058	22.7483	23.5908	24.4334	25.2759	26.1184	26.9610	27.8035	28.6460	29.4886	30.3311	31.1736	32.0161
268	.9059	.7485	.5910	.4335	.2761	.1186	.9612	.8037	.6462	.4888	.3313	.1738	.0164
271	.9061	.7486	.5912	.4337	.2763	.1188	.9613	.8039	.6464	.4890	.3315	.1741	.0166
274	.9062	.7488	.5913	.4339	.2764	.1190	.9615	.8041	.6466	.4892	.3317	.1743	.0168
277	.9064	.7490	.5915	.4341	.2766	.1192	.9617	.8043	.6468	.4894	.3319	.1745	.0171
421280	21.9066	22.7491	23.5917	24.4342	25.2768	26.1194	26.9619	27.8045	28.6470	29.4896	30.3322	31.1747	32.0173
283	.9067	.7493	.5918	.4344	.2770	.1195	.9621	.8047	.6472	.4898	.3324	.1749	.0175
286	.9069	.7494	.5920	.4346	.2772	.1197	.9623	.8049	.6474	.4900	.3326	.1752	.0177
289	.9070	.7496	.5922	.4348	.2773	.1199	.9625	.8051	.6477	.4902	.3328	.1754	.0180
292	.9072	.7498	.5924	.4349	.2775	.1201	.9627	.8053	.6479	.4904	.3330	.1756	.0182
421295	21.9073	22.7499	23.5925	24.4351	25.2777	26.1203	26.9629	27.8055	28.6481	29.4907	30.3332	31.1758	32.0184
298	.9075	.7501	.5927	.4353	.2779	.1205	.9631	.8057	.6483	.4909	.3335	.1761	.0186
301	.9077	.7503	.5929	.4355	.2781	.1207	.9633	.8059	.6485	.4911	.3337	.1763	.0189
304	.9078	.7504	.5930	.4356	.2782	.1208	.9635	.8061	.6487	.4913	.3339	.1765	.0191
307	.9080	.7506	.5932	.4358	.2784	.1210	.9636	.8063	.6489	.4915	.3341	.1767	.0193
421310	21.9081	22.7507	23.5934	24.4360	25.2786	26.1212	26.9638	27.8065	28.6491	29.4917	30.3343	31.1769	32.0196
313	.9083	.7509	.5935	.4362	.2788	.1214	.9640	.8067	.6493	.4919	.3345	.1772	.0198
316	.9084	.7511	.5937	.4363	.2790	.1216	.9642	.8069	.6495	.4921	.3348	.1774	.0200
319	.9086	.7512	.5939	.4365	.2791	.1218	.9644	.8071	.6497	.4923	.3350	.1776	.0202
322	.9087	.7514	.5940	.4367	.2793	.1220	.9646	.8073	.6499	.4925	.3352	.1778	.0205
421325	21.9089	22.7516	23.5942	24.4369	25.2795	26.1222	26.9648	27.8075	28.6501	29.4928	30.3354	31.1781	32.0207
328	.9091	.7517	.5944	.4370	.2797	.1223	.9650	.8076	.6503	.4930	.3356	.1783	.0209
331	.9092	.7519	.5945	.4372	.2799	.1225	.9652	.8078	.6505	.4932	.3358	.1785	.0212
334	.9094	.7520	.5947	.4374	.2800	.1227	.9654	.8080	.6507	.4934	.3360	.1787	.0214
337	.9095	.7522	.5949	.4375	.2802	.1229	.9656	.8082	.6509	.4936	.3363	.1789	.0216
421340	21.9097	22.7524	23.5950	24.4377	25.2804	26.1231	26.9658	27.8084	28.6511	29.4938	30.3365	31.1792	32.0218
343	.9098	.7525	.5952	.4379	.2806	.1233	.9660	.8086	.6513	.4940	.3367	.1794	.0221
346	.9100	.7527	.5954	.4381	.2808	.1235	.9661	.8088	.6515	.4942	.3369	.1796	.0223
349	.9101	.7528	.5955	.4382	.2809	.1236	.9663	.8090	.6517	.4944	.3371	.1798	.0225
352	.9103	.7530	.5957	.4384	.2811	.1238	.9665	.8092	.6519	.4946	.3373	.1800	.0228
421355	21.9105	22.7532	23.5959	24.4386	25.2813	26.1240	26.9667	27.8094	28.6521	29.4949	30.3376	31.1803	32.0230
358	.9106	.7533	.5960	.4388	.2815	.1242	.9669	.8096	.6523	.4951	.3378	.1805	.0232
361	.9108	.7535	.5962	.4389	.2817	.1244	.9671	.8098	.6525	.4953	.3380	.1807	.0234
364	.9109	.7537	.5964	.4391	.2818	.1246	.9673	.8100	.6528	.4955	.3382	.1809	.0237
367	.9111	.7538	.5966	.4393	.2820	.1248	.9675	.8102	.6530	.4957	.3384	.1812	.0239
421370	21.9112	22.7540	23.5967	24.4395	25.2822	26.1249	26.9677	27.8104	28.6532	29.4959	30.3386	31.1814	32.0241
373	.9114	.7541	.5969	.4396	.2824	.1251	.9679	.8106	.6534	.4961	.3389	.1816	.0243
376	.9116	.7543	.5971	.4398	.2826	.1253	.9681	.8108	.6536	.4963	.3391	.1818	.0246
379	.9117	.7545	.5972	.4400	.2827	.1255	.9683	.8110	.6538	.4965	.3393	.1820	.0248
382	.9119	.7546	.5974	.4402	.2829	.1257	.9684	.8112	.6540	.4967	.3395	.1823	.0250
421385	21.9120	22.7548	23.5976	24.4403	25.2831	26.1259	26.9686	27.8114	28.6542	29.4970	30.3397	31.1825	32.0253
388	.9122	.7550	.5977	.4405	.2833	.1261	.9688	.8116	.6544	.4972	.3399	.1827	.0255
391	.9123	.7551	.5979	.4407	.2835	.1262	.9690	.8118	.6546	.4974	.3402	.1829	.0257
394	.9125	.7553	.5981	.4409	.2836	.1264	.9692	.8120	.6548	.4976	.3404	.1832	.0259
397	.9126	.7554	.5982	.4410	.2838	.1266	.9694	.8122	.6550	.4978	.3406	.1834	.0262
421400	21.9128	22.7556	23.5984	24.4412	25.2840	26.1268	26.9696	27.8124	28.6552	29.4980	30.3408	31.1836	32.0264

MEGACYCLES PER SECOND

HARMONICS

BASIC FREQ.	78	80	82	84	86	88	90	92	94	96	100	104	108
421100	32.8458	33.6880	34.5302	35.3724	36.2146	37.0568	37.8990	38.7412	39.5834	40.4256	42.1100	43.7944	45.4788
103	.8460	.6882	.5304	.3727	.2149	.0571	.8993	.7415	.5837	.4259	.1103	.7947	.4791
106	.8463	.6885	.5307	.3729	.2151	.0573	.8995	.7418	.5840	.4262	.1106	.7950	.4794
109	.8465	.6887	.5309	.3732	.2154	.0576	.8998	.7420	.5842	.4265	.1109	.7953	.4798
112	.8467	.6890	.5312	.3734	.2156	.0579	.9001	.7423	.9845	.4268	.1112	.7956	.4801
421115	32.8470	33.6892	34.5314	35.3737	36.2159	37.0581	37.9004	38.7426	39.5848	40.4270	42.1115	43.7960	45.4804
118	.8472	.6894	.5317	.3739	.2161	.0584	.9006	.7429	.5851	.4273	.1118	.7963	.4807
121	.8474	.6897	.5319	.3742	.2164	.0586	.9009	.7431	.5854	.4276	.1121	.7966	.4811
124	.8477	.6899	.5322	.3744	.2167	.0589	.9012	.7434	.5857	.4279	.1124	.7969	.4814
127	.8479	.6902	.5324	.3747	.2169	.0592	.9014	.7437	.5859	.4282	.1127	.7972	.4817
421130	32.8481	33.6904	34.5327	35.3749	36.2172	37.0594	37.9017	38.7440	39.5862	40.4285	42.1130	43.7975	45.4820
133	.8484	.6906	.5329	.3752	.2174	.0597	.9020	.7442	.5865	.4288	.1133	.7978	.4824
136	.8486	.6909	.5332	.3754	.2177	.0600	.9022	.7445	.5868	.4291	.1136	.7981	.4827
139	.8488	.6911	.5334	.3757	.2180	.0602	.9025	.7448	.5871	.4293	.1139	.7985	.4830
142	.8491	.6914	.5336	.3759	.2182	.0605	.9028	.7451	.5873	.4296	.1142	.7988	.4833
421145	32.8493	33.6916	34.5339	35.3762	36.2185	37.0608	37.9031	38.7453	39.5876	40.4299	42.1145	43.7991	45.4837
148	.8495	.6918	.5341	.3764	.2187	.0610	.9033	.7456	.5879	.4302	.1148	.7994	.4840
151	.8498	.6921	.5344	.3767	.2190	.0613	.9036	.7459	.5882	.4305	.1151	.7997	.4843
154	.8500	.6923	.5346	.3769	.2192	.0616	.9039	.7462	.5885	.4308	.1154	.8000	.4846
157	.8502	.6926	.5349	.3772	.2195	.0618	.9041	.7464	.5888	.4311	.1157	.8003	.4850
421160	32.8505	33.6928	34.5351	35.3774	36.2198	37.0621	37.9044	38.7467	39.5890	40.4314	42.1160	43.8006	45.4853
163	.8507	.6930	.5354	.3777	.2200	.0623	.9047	.7470	.5893	.4316	.1163	.8010	.4856
166	.8509	.6933	.5356	.3779	.2203	.0626	.9049	.7473	.5896	.4319	.1166	.8013	.4859
169	.8512	.6935	.5359	.3782	.2205	.0629	.9052	.7475	.5899	.4322	.1169	.8016	.4863
172	.8514	.6938	.5361	.3784	.2208	.0631	.9055	.7478	.5902	.4325	.1172	.8019	.4866
421175	32.8517	33.6940	34.5364	35.3787	36.2211	37.0634	37.9058	38.7481	39.5905	40.4328	42.1175	43.8022	45.4869
178	.8519	.6942	.5366	.3790	.2213	.0637	.9060	.7484	.5907	.4331	.1178	.8025	.4872
181	.8521	.6945	.5368	.3792	.2216	.0639	.9063	.7487	.5910	.4334	.1181	.8028	.4875
184	.8524	.6947	.5371	.3795	.2218	.0642	.9066	.7489	.5913	.4337	.1184	.8031	.4879
187	.8526	.6950	.5373	.3797	.2221	.0645	.9068	.7492	.5916	.4340	.1187	.8034	.4882
421190	32.8528	33.6952	34.5376	35.3800	36.2223	37.0647	37.9071	38.7495	39.5919	40.4342	42.1190	43.8038	45.4885
193	.8531	.6954	.5378	.3802	.2226	.0650	.9074	.7498	.5921	.4345	.1193	.8041	.4888
196	.8533	.6957	.5381	.3805	.2229	.0652	.9076	.7500	.5924	.4348	.1196	.8044	.4892
199	.8535	.6959	.5383	.3807	.2231	.0655	.9079	.7503	.5927	.4351	.1199	.8047	.4895
202	.8538	.6962	.5386	.3810	.2234	.0658	.9082	.7506	.5930	.4354	.1202	.8050	.4898
421205	32.8540	33.6964	34.5388	35.3812	36.2236	37.0660	37.9085	38.7509	39.5933	40.4357	42.1205	43.8053	45.4901
208	.8542	.6966	.5391	.3815	.2239	.0663	.9087	.7511	.5936	.4360	.1208	.8056	.4905
211	.8545	.6969	.5393	.3817	.2241	.0666	.9090	.7514	.5938	.4363	.1211	.8059	.4908
214	.8547	.6971	.5395	.3820	.2244	.0668	.9093	.7517	.5941	.4365	.1214	.8063	.4911
217	.8549	.6974	.5398	.3822	.2247	.0671	.9095	.7520	.5944	.4368	.1217	.8066	.4914
421220	32.8552	33.6976	34.5400	35.3825	36.2249	37.0674	37.9098	38.7522	39.5947	40.4371	42.1220	43.8069	45.4918
223	.8554	.6978	.5403	.3827	.2252	.0676	.9101	.7525	.5950	.4374	.1223	.8072	.4921
226	.8556	.6981	.5405	.3830	.2254	.0679	.9103	.7528	.5952	.4377	.1226	.8075	.4924
229	.8559	.6983	.5408	.3832	.2257	.0682	.9106	.7531	.5985	.4380	.1229	.8078	.4927
232	.8561	.6986	.5410	.3835	.2260	.0684	.9109	.7533	.5958	.4383	.1232	.8081	.4931
421235	32.8563	33.6988	34.5413	35.8837	36.2262	37.0687	37.9112	38.7536	39.5961	40.4386	42.1235	43.8084	45.4934
238	.8566	.6990	.5415	.3840	.2265	.0689	.9114	.7539	.5964	.4388	.1238	.8088	.4937
241	.8568	.6993	.5418	.3842	.2267	.0692	.9117	.7542	.5967	.4391	.1241	.8091	.4940
244	.8570	.6995	.5420	.3845	.2270	.0695	.9120	.7544	.5969	.4394	.1244	.9094	.4944
247	.8573	.6998	.5423	.3847	.2272	.0697	.9122	.7547	.5972	.4397	.1247	.8097	.4947
421250	32.8575	33.7000	34.5425	35.3850	36.2275	37.0700	37.9125	38.7550	39.5975	40.4400	42.1250	43.8100	45.4950
253	.8577	.7002	.5427	.3853	.2278	.0703	.9128	.7553	.5978	.4403	.1253	.8103	.4953
256	.8580	.7005	.5430	.3855	.2280	.0705	.9130	.7556	.5981	.4406	.1256	.8106	.4956
259	.8582	.7007	.5432	.3858	.2283	.0708	.9133	.7558	.5983	.4409	.1259	.8109	.4960
262	.8584	.7010	.5435	.3860	.2285	.0711	.9136	.7561	.5986	.4412	.1262	.8112	.4963
421265	32.8587	33.7012	34.5437	35.3863	36.2288	37.0713	37.9139	38.7564	39.5989	40.4414	42.1265	43.8116	45.4966
268	.8589	.7014	.5440	.3865	.2290	.0716	.9141	.7567	.5992	.4417	.1268	.8119	.4969
271	.8591	.7017	.5442	.3868	.2293	.0718	.9144	.7569	.5995	.4420	.1271	.8122	.4973
274	.8594	.7019	.5445	.3870	.2296	.0721	.9147	.7572	.5998	.4423	.1274	.8125	.4976
277	.8596	.7022	.5447	.3873	.2298	.0724	.9149	.7575	.6000	.4426	.1277	.8128	.4979
421280	32.8598	33.7024	34.5450	35.3875	36.2301	37.0726	37.9152	38.7578	39.6003	40.4429	42.1280	43.8131	45.4982
283	.8601	.7026	.5452	.3878	.2303	.0729	.9155	.7580	.6006	.4432	.1283	.8134	.4986
286	.8603	.7029	.5455	.3880	.2306	.0732	.9157	.7583	.6009	.4435	.1286	.8137	.4989
289	.8605	.7031	.5457	.3883	.2309	.0734	.9160	.7586	.6012	.4437	.1289	.8141	.4992
292	.8608	.7034	.5459	.3885	.2311	.0737	.9163	.7589	.6014	.4440	.1292	.8144	.4995
421295	32.8610	33.7036	34.5462	35.3888	36.2314	37.0740	37.9166	38.7591	39.6017	40.4443	42.1295	43.8147	45.4999
298	.8612	.7038	.5464	.3890	.2316	.0742	.9168	.7594	.6020	.4446	.1298	.8150	.5002
301	.8615	.7041	.5467	.3893	.2319	.0745	.9171	.7597	.6023	.4449	.1301	.8153	.5005
304	.8617	.7043	.5469	.3895	.2321	.0748	.9174	.7600	.6026	.4452	.1304	.8156	.5008
307	.8619	.7046	.5472	.3898	.2324	.0750	.9176	.7602	.6029	.4455	.1307	.8159	.5012
421310	32.8622	33.7048	34.5474	35.3900	36.2327	37.0753	37.9179	38.7605	39.6031	40.4458	42.1310	43.8162	45.5015
313	.8624	.7050	.5477	.3903	.2329	.0755	.9182	.7608	.6034	.4460	.1313	.8166	.5018
316	.8626	.7053	.5479	.3905	.2332	.0758	.9184	.7611	.6037	.4463	.1316	.8169	.5021
319	.8629	.7055	.5482	.3908	.2334	.0761	.9187	.7613	.6040	.4466	.1319	.8172	.5025
322	.8631	.7058	.5484	.3910	.2337	.0763	.9190	.7616	.6043	.4469	.1322	.8175	.5028
421325	32.8634	33.7060	34.5487	35.3913	36.2340	37.0766	37.9193	38.7619	39.6046	40.4472	42.1325	43.8178	45.5031
328	.8636	.7062	.5489	.3916	.2342	.0769	.9195	.7622	.6048	.4475	.1328	.8181	.5034
331	.8638	.7065	.5491	.3918	.2345	.0771	.9198	.7625	.6051	.4478	.1331	.8184	.5037
334	.8641	.7067	.5494	.3921	.2347	.0774	.9201	.7627	.6054	.4481	.1334	.8187	.5041
337	.8643	.7070	.5496	.3923	.2350	.0777	.9203	.7630	.6057	.4484	.1337	.8190	.5044
421340	32.8645	33.7072	34.5499	35.3926	36.2352	37.0779	37.9206	38.7633	39.6060	40.4486	42.1340	43.8194	45.5047
343	.8648	.7074	.5501	.3928	.2355	.0782	.9209	.7636	.6062	.4489	.1343	.8197	.5050
346	.8650	.7077	.5504	.3931	.2358	.0784	.9211	.7638	.6065	.4492	.1346	.8200	.5054
349	.8652	.7079	.5506	.3933	.2360	.0787	.9214	.7641	.6068	.4495	.1349	.8203	.5057
352	.8655	.7082	.5509	.3936	.2363	.0790	.9217	.7644	.6071	.4498	.1352	.8206	.5060
421355	32.8657	33.7084	34.5511	35.3938	36.2365	37.0792	37.9220	38.7647	39.6074	40.4501	42.1355	43.8209	45.5063
358	.8659	.7086	.5514	.3941	.2368	.0795	.9222	.7649	.6077	.4504	.1358	.8212	.5067
361	.8662	.7089	.5516	.3943	.2370	.0798	.9225	.7652	.6079	.4507	.1361	.8215	.5070
364	.8664	.7091	.5518	.3946	.2373	.0800	.9228	.7655	.6082	.4509	.1364	.8219	.5073
367	.8666	.7094	.5521	.3948	.2376	.0803	.9230	.7658	.6085	.4512	.1367	.8222	.5076
421370	32.8669	33.7096	34.5523	35.3951	36.2378	37.0806	37.9233	38.7660	39.6088	40.4515	42.1370	43.8225	45.5080
373	.8671	.7098	.5526	.3953	.2381	.0808	.9236	.7663	.6091	.4518	.1373	.8228	.5083
376	.8673	.7101	.5528	.3956	.2383	.0811	.9238	.7666	.6093	.4521	.1376	.8231	.5086
379	.8676	.7103	.5531	.3958	.2386	.0814	.9241	.7669	.6096	.4524	.1379	.8234	.5089
382	.8678	.7106	.5533	.3961	.2389	.0816	.9244	.7671	.6099	.4527	.1382	.8237	.5093
421385	32.8680	33.7108	34.5536	35.3963	36.2391	37.0819	37.9247	38.7674	39.6102	40.4530	42.1385	43.8240	45.5096
388	.8683	.7110	.5538	.3966	.2394	.0821	.9249	.7677	.6105	.4532	.1388	.8244	.5099
391	.8685	.7113	.5541	.3968	.2396	.0824	.9252	.7680	.6108	.4535	.1391	.8247	.5102
394	.8687	.7115	.5543	.3971	.2399	.0827	.9255	.7682	.6110	.4538	.1394	.8250	.5106
397	.8690	.7118	.5546	.3973	.2401	.0829	.9257	.7685	.6113	.4541	.1397	.8253	.5109
421400	32.8692	33.7120	34.5548	35.3976	36.2404	37.0832	37.9260	38.7688	39.6116	40.4544	42.1400	43.8256	45.5112

MEGACYCLES PER SECOND

HARMONICS

BASIC FREQ.	52	54	56	58	60	62	64	66	68	70	72	74	76
421200	21.9128	22.7556	23.5984	24.4412	25.2840	26.1268	26.9696	27.8124	28.6552	29.4980	30.3408	31.1836	32.0264
403	.9130	.7558	.5986	.4414	.2842	.1270	.9698	.8126	.6554	.4982	.3410	.1838	.0266
406	.9131	.7559	.5987	.4415	.2844	.1272	.9700	.8128	.6556	.4984	.3412	.1840	.0269
409	.9133	.7561	.5989	.4417	.2845	.1274	.9702	.8130	.6558	.4986	.3414	.1843	.0271
412	.9134	.7562	.5991	.4419	.2847	.1275	.9704	.8132	.6560	.4988	.3417	.1845	.0273
421415	21.9136	22.7564	23.5992	24.4421	25.2849	26.1277	26.9706	27.8134	28.6562	29.4991	30.3419	31.1847	32.0275
418	.9137	.7566	.5994	.4422	.2851	.1279	.9708	.8136	.6564	.4993	.3421	.1849	.0278
421	.9139	.7567	.5996	.4424	.2853	.1281	.9709	.8138	.6566	.4995	.3423	.1852	.0280
424	.9140	.7569	.5997	.4426	.2854	.1283	.9711	.8140	.6568	.4997	.3425	.1854	.0282
427	.9142	.7571	.5999	.4428	.2856	.1285	.9713	.8142	.6570	.4999	.3427	.1856	.0285
421430	21.9144	22.7572	23.6001	24.4429	25.2858	26.1287	26.9715	27.8144	28.6572	29.5001	30.3430	31.1858	32.0287
433	.9145	.7574	.6002	.4431	.2860	.1288	.9717	.8146	.6574	.5003	.3432	.1860	.0289
436	.9147	.7575	.6004	.4433	.2862	.1290	.9719	.8148	.6576	.5005	.3434	.1863	.0291
439	.9148	.7577	.6006	.4435	.2863	.1292	.9721	.8150	.6579	.5007	.3436	.1865	.0294
442	.9150	.7579	.6008	.4436	.2865	.1294	.9723	.8152	.6581	.5009	.3438	.1867	.0296
421445	21.9151	22.7580	23.6009	24.4438	25.2867	26.1296	26.9725	27.8154	28.6583	29.5012	30.3440	31.1869	32.0298
448	.9153	.7582	.6011	.4440	.2869	.1298	.9727	.8156	.6585	.5014	.3443	.1872	.0300
451	.9155	.7584	.6013	.4442	.2871	.1300	.9729	.8158	.6587	.5016	.3445	.1874	.0303
454	.9156	.7585	.6014	.4443	.2872	.1301	.9731	.8160	.6589	.5018	.3447	.1876	.0305
457	.9158	.7587	.6016	.4445	.2874	.1303	.9732	.8162	.6591	.5020	.3449	.1878	.0307
421460	21.9159	22.7588	23.6018	24.4447	25.2876	26.1305	26.9734	27.8164	28.6593	29.5022	30.3451	31.1880	32.0310
463	.9161	.7590	.6019	.4449	.2878	.1307	.9736	.8166	.6595	.5024	.3453	.1883	.0312
466	.9162	.7592	.6021	.4450	.2880	.1309	.9738	.8168	.6597	.5026	.3456	.1885	.0314
469	.9164	.7593	.6023	.4452	.2881	.1311	.9740	.8170	.6599	.5028	.3458	.1887	.0316
472	.9165	.7595	.6024	.4454	.2883	.1313	.9742	.8172	.6601	.5030	.3460	.1889	.0319
421475	21.9167	22.7597	23.6026	24.4456	25.2885	26.1315	26.9744	27.8174	28.6603	29.5033	30.3462	31.1892	32.0321
478	.9169	.7598	.6028	.4457	.2887	.1316	.9746	.8175	.6605	.5035	.3464	.1894	.0323
481	.9170	.7600	.6029	.4459	.2889	.1318	.9748	.8177	.6607	.5037	.3466	.1896	.0326
484	.9172	.7601	.6031	.4461	.2890	.1320	.9750	.8179	.6609	.5039	.3468	.1898	.0328
487	.9173	.7603	.6033	.4462	.2892	.1322	.9752	.8181	.6611	.5041	.3471	.1900	.0330
421490	21.9175	22.7605	23.6034	24.4464	25.2894	26.1324	26.9754	27.8183	28.6613	29.5043	30.3473	31.1903	32.0332
493	.9176	.7606	.6036	.4466	.2896	.1326	.9756	.8185	.6615	.5045	.3475	.1905	.0335
496	.9178	.7608	.6038	.4468	.2898	.1328	.9757	.8187	.6617	.5047	.3477	.1907	.0337
499	.9179	.7609	.6039	.4469	.2899	.1329	.9759	.8189	.6619	.5049	.3479	.1909	.0339
502	.9181	.7611	.6041	.4471	.2901	.1331	.9761	.8191	.6621	.5051	.3481	.1911	.0342
421505	21.9183	22.7613	23.6043	24.4473	25.2903	26.1333	26.9763	27.8193	28.6623	29.5054	30.3484	31.1914	32.0344
508	.9184	.7614	.6044	.4475	.2905	.1335	.9765	.8195	.6625	.5056	.3486	.1916	.0346
511	.9186	.7616	.6046	.4476	.2907	.1337	.9767	.8197	.6627	.5058	.3488	.1918	.0348
514	.9187	.7618	.6048	.4478	.2908	.1339	.9769	.8199	.6630	.5060	.3490	.1920	.0351
517	.9189	.7619	.6050	.4480	.2910	.1341	.9771	.8201	.6632	.5062	.3492	.1923	.0353
421520	21.9190	22.7621	23.6051	24.4482	25.2912	26.1342	26.9773	27.8203	28.6634	29.5064	30.3494	31.1925	32.0355
523	.9192	.7622	.6053	.4483	.2914	.1344	.9775	.8205	.6636	.5066	.3497	.1927	.0357
526	.9194	.7624	.6055	.4485	.2916	.1346	.9777	.8207	.6638	.5068	.3499	.1929	.0360
529	.9195	.7626	.6056	.4487	.2917	.1348	.9779	.8209	.6640	.5070	.3501	.1931	.0362
532	.9197	.7627	.6058	.4489	.2919	.1350	.9780	.8211	.6642	.5072	.3503	.1934	.0364
421535	21.9198	22.7629	23.6060	24.4490	25.2921	26.1352	26.9782	27.8213	28.6644	29.5075	30.3505	31.1936	32.0367
538	.9200	.7631	.6061	.4492	.2923	.1354	.9784	.8215	.6646	.5077	.3507	.1938	.0369
541	.9201	.7632	.6063	.4494	.2925	.1355	.9786	.8217	.6648	.5079	.3510	.1940	.0371
544	.9203	.7634	.6065	.4496	.2926	.1357	.8788	.8219	.6650	.5081	.3512	.1943	.0373
547	.9204	.7635	.6066	.4497	.2928	.1359	.9790	.8221	.6652	.5083	.3514	.1945	.0376
421550	21.9206	22.7637	23.6068	24.4499	25.2930	26.1361	26.9792	27.8223	29.6654	29.5085	30.3516	31.1947	32.0378
553	.9208	.7639	.6070	.4501	.2932	.1363	.9794	.8225	.6656	.5087	.3518	.1949	.0380
556	.9209	.7640	.6071	.4502	.2934	.1365	.9786	.8227	.6658	.5089	.3520	.1951	.0383
559	.9211	.7642	.6073	.4504	.2935	.1367	.9798	.8229	.6660	.5091	.3522	.1954	.0385
562	.9212	.7643	.6075	.4506	.2937	.1368	.9800	.8231	.6662	.5093	.3525	.1956	.0387
421565	21.9214	22.7645	23.6076	24.4508	25.2939	26.1370	26.9802	27.8233	28.6664	29.5096	30.3527	31.1958	32.0389
568	.9215	.7647	.6078	.4509	.2941	.1372	.9804	.8235	.6666	.5098	.3529	.1960	.0392
571	.9217	.7648	.6080	.4511	.2943	.1374	.9805	.8237	.6668	.5100	.3531	.1963	.0394
574	.9218	.7650	.6081	.4513	.2944	.1376	.9807	.8239	.6670	.5102	.3533	.1965	.0396
577	.9220	.7652	.6083	.4515	.2946	.1378	.9809	.8241	.6672	.5104	.3535	.1967	.0399
421580	21.9222	22.7653	23.6085	24.4516	25.2948	26.1380	26.9811	27.8243	28.6674	29.5106	30.3538	31.1969	32.0401
583	.9223	.7655	.6086	.4518	.2950	.1381	.9813	.8245	.6676	.5108	.3540	.1971	.0403
586	.9225	.7656	.6088	.4520	.2952	.1383	.9815	.8247	.6678	.5110	.3542	.1974	.0405
589	.9226	.7658	.6090	.4522	.2953	.1385	.9817	.8249	.6681	.5112	.3544	.1976	.0408
592	.9228	.7660	.6092	.4523	.2955	.1387	.9819	.8251	.6683	.5114	.3546	.1978	.0410
421595	21.9229	22.7661	23.6093	24.4525	25.2957	26.1389	26.9821	27.8253	28.6685	29.5117	30.3548	31.1980	32.0412
598	.9231	.7663	.6095	.4527	.2959	.1391	.9823	.8255	.6687	.5119	.3551	.1983	.0414
601	.9233	.7665	.6097	.4529	.2961	.1393	.9825	.8257	.6689	.5121	.3553	.1985	.0417
604	.9234	.7666	.6098	.4530	.2962	.1394	.9827	.8259	.6691	.5123	.3555	.1987	.0419
607	.9236	.7668	.6100	.4532	.2964	.1396	.9828	.8261	.6693	.5125	.3557	.1989	.0421
421610	21.9237	22.7669	23.6102	24.4534	25.2966	26.1398	26.9830	27.8263	28.6695	29.5127	30.3559	31.1991	32.0424
613	.9239	.7671	.6103	.4536	.2968	.1400	.9832	.8265	.6697	.5129	.3561	.1994	.0426
616	.9240	.7673	.6105	.4537	.2970	.1402	.9834	.8267	.6699	.5131	.3564	.1996	.0428
619	.9242	.7674	.6107	.4539	.2971	.1404	.9836	.8269	.6701	.5133	.3566	.1998	.0430
622	.9243	.7676	.6108	.4541	.2973	.1406	.9838	.8271	.6703	.5135	.3568	.2000	.0433
421625	21.9245	22.7678	23.6110	24.4543	25.2975	26.1408	26.9840	27.8273	28.6705	29.5138	30.3570	31.2003	32.0435
628	.9247	.7679	.6112	.4544	.2977	.1409	.9842	.8274	.6707	.5140	.3572	.2005	.0437
631	.9248	.7681	.6113	.4546	.2979	.1411	.9844	.8276	.6709	.5142	.3574	.2007	.0440
634	.9250	.7682	.6115	.4548	.2980	.1413	.9846	.8278	.6711	.5144	.3576	.2009	.0442
637	.9251	.7684	.6117	.4549	.2982	.1415	.9848	.8280	.6713	.5146	.3579	.2011	.0444
421640	21.9253	22.7686	23.6118	24.4551	25.2984	26.1417	26.9850	27.8282	28.6715	29.5148	30.3581	31.2014	32.0446
643	.9254	.7687	.6120	.4553	.2986	.1419	.9852	.8284	.6717	.5150	.3583	.2016	.0449
646	.9256	.7689	.6122	.4555	.2988	.1421	.9853	.8286	.6719	.5152	.3585	.2018	.0451
649	.9257	.7690	.6123	.4556	.2989	.1422	.9855	.8286	.6721	.5154	.3587	.2020	.0453
652	.9259	.7692	.6125	.4558	.2991	.1424	.9857	.8290	.6723	.5156	.3589	.2022	.0456
421655	21.9261	22.7694	23.6127	24.4560	25.2993	26.1426	26.9859	27.8292	28.6725	29.5159	30.3592	31.2025	32.0458
658	.9262	.7695	.6128	.4562	.2995	.1428	.9861	.8294	.6727	.5161	.3594	.2027	.0460
661	.9264	.7697	.6130	.4563	.2997	.1430	.9863	.8296	.6729	.5163	.3596	.2029	.0462
664	.9265	.7699	.6132	.4565	.2998	.1432	.9865	.8298	.6732	.5165	.3598	.2031	.0465
667	.9267	.7700	.6134	.4567	.3000	.1434	.9867	.8300	.6734	.5167	.3600	.2034	.0467
421670	21.9268	22.7702	23.6135	24.4569	25.3002	26.1435	26.9869	27.8302	28.6736	29.5169	30.3602	31.2036	32.0469
673	.9270	.7703	.6137	.4570	.3004	.1437	.9871	.8304	.6738	.5171	.3605	.2038	.0471
676	.9272	.7705	.6139	.4572	.3006	.1439	.9873	.8306	.6740	.5173	.3607	.2040	.0474
679	.9273	.7707	.6140	.4574	.3007	.1441	.9875	.8308	.6742	.5175	.3609	.2042	.0476
682	.9275	.7708	.6142	.4576	.3009	.1443	.9876	.8310	.6744	.5177	.3611	.2045	.0478
421685	21.9276	22.7710	23.6144	24.4577	25.3011	26.1445	26.9878	27.8312	28.6746	29.5180	30.3613	31.2047	32.0481
688	.9278	.7712	.6145	.4579	.3013	.1447	.9880	.8314	.6748	.5182	.3615	.2049	.0483
691	.9279	.7713	.6147	.4581	.3015	.1448	.9882	.8316	.6750	.5184	.3618	.2051	.0485
694	.9281	.7715	.6149	.4583	.3016	.1450	.9884	.8318	.6752	.5186	.3620	.2054	.0487
697	.9282	.7716	.6150	.4584	.3018	.1452	.9886	.8320	.6754	.5188	.3622	.2056	.0490
421700	21.9284	22.7718	23.6152	24.4586	25.3020	26.1454	26.9888	27.8322	28.6756	29.5190	30.3624	31.2058	32.0492

MEGACYCLES PER SECOND

HARMONICS

BASIC FREQ.	78	80	82	84	86	88	90	92	94	96	100	104	108
421400	32.8692	33.7120	34.5548	35.3976	36.2404	37.0832	37.9260	38.7688	39.6116	40.4544	42.1400	43.8256	45.5112
403	.8694	.7122	.5550	.3979	.2407	.0835	.9263	.7691	.6119	.4547	.1403	.8259	.5115
406	.8697	.7125	.5553	.3981	.2409	.0837	.9265	.7694	.6122	.4550	.1406	.8262	.5118
409	.8699	.7127	.5555	.3984	.2412	.0840	.9268	.7696	.6124	.4553	.1409	.8265	.5122
412	.8701	.7130	.5558	.3986	.2414	.0843	.9271	.7699	.6127	.4556	.1412	.8268	.5125
421415	32.8704	33.7132	34.5560	35.3989	36.2417	37.0845	37.9274	38.7702	39.6130	40.4558	42.1415	43.8272	45.5128
418	.8706	.7134	.5563	.3991	.2419	.0848	.9276	.7705	.6133	.4561	.1418	.8275	.5131
421	.8708	.7137	.5565	.3994	.2422	.0850	.9279	.7707	.6136	.4564	.1421	.8278	.5135
424	.8711	.7139	.5568	.3996	.2425	.0853	.9282	.7710	.6139	.4567	.1424	.8281	.5138
427	.8713	.7142	.5570	.3999	.2427	.0856	.9284	.7713	.6141	.4570	.1427	.8284	.5141
421430	32.8715	33.7144	34.5573	35.4001	36.2430	37.0858	37.9287	38.7716	39.6144	40.4573	42.1430	43.8287	45.5144
433	.8718	.7146	.5575	.4004	.2432	.0861	.9290	.7718	.6147	.4576	.1433	.8290	.5148
436	.8720	.7149	.5578	.4006	.2435	.0864	.9292	.7721	.6150	.4579	.1436	.8293	.5151
439	.8722	.7151	.5580	.4009	.2438	.0866	.9295	.7724	.6153	.4581	.1439	.8297	.5154
442	.8725	.7154	.5582	.4011	.2440	.0869	.9298	.7727	.6155	.4584	.1442	.8300	.5157
421445	32.8727	33.7156	34.5585	35.4014	36.2443	37.0872	37.9301	38.7729	39.6158	40.4587	42.1445	43.8303	45.5161
448	.8729	.7158	.5587	.4016	.2445	.0874	.9303	.7732	.6161	.4590	.1448	.8306	.5164
451	.8732	.7161	.5590	.4019	.2448	.0877	.9306	.7735	.6164	.4593	.1451	.8309	.5167
454	.8734	.7163	.5592	.4021	.2450	.0880	.9309	.7738	.6167	.4596	.1454	.8312	.5170
457	.8736	.7166	.5595	.4024	.2453	.0882	.9311	.7740	.6170	.4599	.1457	.8315	.5174
421460	32.8739	33.7168	34.5597	35.4026	36.2456	37.0885	37.9314	38.7743	39.6172	40.4602	42.1460	43.8318	45.5177
463	.8741	.7170	.5600	.4029	.2458	.0887	.9317	.7746	.6175	.4604	.1463	.8322	.5180
466	.8743	.7173	.5602	.4031	.2461	.0890	.9319	.7749	.6178	.4607	.1466	.8325	.5183
469	.8746	.7175	.5605	.4034	.2463	.0893	.9322	.7751	.6181	.4610	.1469	.8328	.5187
472	.8748	.7178	.5607	.4036	.2466	.0895	.9325	.7754	.6184	.4613	.1472	.8331	.5190
421475	32.8751	33.7180	34.5610	35.4039	36.2469	37.0898	37.9328	38.7757	39.6187	40.4616	42.1475	43.8334	45.5193
478	.8753	.7182	.5612	.4042	.2471	.0901	.9330	.7760	.6189	.4619	.1478	.8337	.5196
481	.8755	.7185	.5614	.4044	.2474	.0903	.9333	.7763	.6192	.4622	.1481	.8340	.5199
484	.8758	.7187	.5617	.4047	.2476	.0906	.9336	.7765	.6195	.4625	.1484	.8343	.5203
487	.8760	.7190	.5619	.4049	.2479	.0909	.9338	.7768	.6198	.4628	.1487	.8346	.5206
421490	32.8762	33.7192	34.5622	35.4052	36.2481	37.0911	37.9341	38.7771	39.6201	40.4630	42.1490	43.8350	45.5209
493	.8765	.7194	.5624	.4054	.2484	.0914	.9344	.7774	.6203	.4633	.1493	.8353	.4212
496	.8767	.7197	.5627	.4057	.2487	.0916	.9346	.7776	.6206	.4636	.1496	.8356	.5216
499	.8769	.7199	.5629	.4059	.2489	.0919	.9349	.7779	.6209	.4639	.1499	.8359	.5219
502	.8772	.7202	.5632	.4062	.2492	.0922	.9352	.7782	.6212	.4642	.1502	.8362	.5222
421505	32.8774	33.7204	34.5634	35.4064	36.2494	37.0924	37.9355	38.7785	39.6215	40.4645	42.1505	43.8365	45.5225
508	.8776	.7206	.5637	.4067	.2497	.0927	.9357	.7787	.6218	.4648	.1508	.8368	.5229
511	.8779	.7209	.5639	.4069	.2499	.0930	.9360	.7790	.6220	.4651	.1511	.8371	.5232
514	.8781	.7211	.5641	.4072	.2502	.0932	.9363	.7793	.6223	.4653	.1514	.8375	.5235
517	.8783	.7214	.5644	.4074	.2505	.0935	.9365	.7796	.6226	.4656	.1517	.8378	.5238
421520	32.8786	33.7216	34.5646	35.4077	36.2507	37.0938	37.9368	38.7798	39.6229	40.4659	42.1520	43.8381	45.5242
523	.8788	.7218	.5649	.4079	.2510	.0940	.9371	.7801	.6232	.4662	.1523	.8384	.5245
526	.8790	.7221	.5651	.4082	.2512	.0943	.9373	.7804	.6234	.4665	.1526	.8387	.5248
529	.8793	.7223	.5654	.4084	.2515	.0946	.9376	.7807	.6237	.4668	.1529	.8390	.5251
532	.8795	.7226	.5656	.4087	.2518	.0948	.9379	.7809	.6240	.4671	.1532	.8393	.5255
421535	32.8797	33.7228	34.5659	35.4089	36.2520	37.0951	37.9382	38.7812	39.6243	40.4674	42.1535	43.8396	45.5258
538	.8800	.7230	.5661	.4092	.2523	.0953	.9384	.7815	.6246	.4676	.1538	.8400	.5261
541	.8802	.7233	.5664	.4094	.2525	.0956	.9387	.7818	.6249	.4679	.1541	.8403	.5264
544	.8804	.7235	.5666	.4097	.2528	.0959	.9390	.7820	.6251	.4682	.1544	.8406	.5268
547	.8807	.7238	.5669	.4099	.2530	.0961	.9392	.7823	.6254	.4685	.1547	.8409	.5271
421550	32.8809	33.7240	34.5671	35.4102	36.2533	37.0964	37.9395	38.7826	39.6257	40.4688	42.1550	43.8412	45.5274
553	.8811	.7242	.5673	.4105	.2536	.0967	.9398	.7829	.6260	.4691	.1553	.8415	.5277
556	.8814	.7245	.5676	.4107	.2538	.0969	.9400	.7832	.6263	.4694	.1556	.8418	.5280
559	.8816	.7247	.5678	.4110	.2541	.0972	.9403	.7834	.6265	.4697	.1559	.8421	.5284
562	.8818	.7250	.5681	.4112	.2543	.0975	.9406	.7837	.6268	.4700	.1562	.8424	.5287
421565	32.8821	33.7252	34.5683	35.4115	36.2546	37.0977	37.9409	38.7840	39.6271	40.4702	42.1565	43.8428	45.5290
568	.8823	.7254	.5686	.4117	.2548	.0980	.9411	.7843	.6274	.4705	.1568	.8431	.5293
571	.8825	.7257	.5688	.4120	.2551	.0982	.9414	.7845	.6277	.4708	.1571	.8434	.5297
574	.8828	.7259	.5691	.4122	.2554	.0985	.9417	.7848	.6280	.4711	.1574	.8437	.5300
577	.8830	.7262	.5693	.4125	.2556	.0988	.9419	.7851	.6282	.4714	.1577	.8440	.5303
421580	32.8832	33.7264	34.5696	35.4127	36.2559	37.0990	37.9422	38.7854	39.6285	40.4717	42.1580	43.8443	45.5306
583	.8835	.7266	.5698	.4130	.2561	.0993	.9425	.7856	.6288	.4720	.1583	.8446	.5310
586	.8837	.7269	.5701	.4132	.2564	.0996	.9427	.7859	.6291	.4723	.1586	.8449	.5313
589	.8839	.7271	.5703	.4135	.2567	.0998	.9430	.7862	.6294	.4725	.1589	.8453	.5316
592	.8842	.7274	.5705	.4137	.2569	37.1001	.9433	.7865	.6296	.4728	.1592	.8456	.5319
421595	32.8844	33.7276	34.5708	35.4140	36.2572	37.1004	37.9436	38.7867	39.6299	40.4731	42.1595	43.8459	45.5323
598	.8846	.7278	.5710	.4142	.2574	.1006	.9438	.7870	.6302	.4734	.1598	.8462	.5326
601	.8849	.7281	.5713	.4145	.2577	.1009	.9441	.7873	.6305	.4737	.1601	.8465	.5329
604	.8851	.7283	.5715	.4147	.2579	.1012	.9444	.7876	.6308	.4740	.1604	.8468	.5332
607	.8853	.7286	.5718	.4150	.2582	.1014	.9446	.7878	.6311	.4743	.1607	.8471	.5336
421610	32.8856	33.7288	34.5720	35.4152	36.2585	37.1017	37.9449	38.7881	39.6313	40.4746	42.1610	43.8474	45.5339
613	.8858	.7290	.5723	.4155	.2587	.1019	.9452	.7884	.6316	.4748	.1613	.8478	.5342
616	.8860	.7293	.5725	.4157	.2590	.1022	.9454	.7887	.6319	.4751	.1616	.8481	.5345
619	.8863	.7295	.5728	.4160	.2592	.1025	.9457	.7889	.6322	.4754	.1619	.8484	.5349
622	.8865	.7298	.5730	.4162	.2595	.1027	.9460	.7892	.6325	.4757	.1622	.8487	.5352
421625	32.8868	33.7300	34.5733	35.4165	36.2598	37.1030	37.9463	38.7895	39.6328	40.4760	42.1625	43.8490	45.5355
628	.8870	.7302	.5735	.4168	.2600	.1033	.9465	.7898	.6330	.4763	.1628	.8493	.5358
631	.8872	.7305	.5737	.4170	.2603	.1035	.9468	.7901	.6333	.4766	.1631	.8496	.5361
634	.8875	.7307	.5740	.4173	.2605	.1038	.9471	.7903	.6336	.4769	.1634	.8499	.5365
637	.8877	.7310	.5742	.4175	.2608	.1041	.9473	.7906	.6339	.4772	.1637	.8502	.5368
421640	32.8879	33.7312	34.5745	35.4178	36.2610	37.1043	37.9476	38.7909	39.6342	40.4774	42.1640	43.8506	45.5371
643	.8882	.7314	.5747	.4180	.2613	.1046	.9479	.7912	.6344	.4777	.1643	.8509	.5374
646	.8884	.7317	.5750	.4183	.2616	.1048	.9481	.7914	.6347	.4780	.1646	.8512	.5378
649	.8886	.7319	.5752	.4185	.2618	.1051	.9484	.7917	.6350	.4783	.1649	.8515	.5381
652	.8889	.7322	.5755	.4188	.2621	.1054	.9487	.7920	.6353	.4786	.1652	.8518	.5384
421655	32.8891	33.7324	34.5757	35.4190	36.2623	37.1056	37.9490	38.7923	39.6356	40.4789	42.1655	43.8521	45.5387
658	.8893	.7326	.5760	.4193	.2626	.1059	.9492	.7925	.6359	.4792	.1658	.8524	.5391
661	.8896	.7329	.5762	.4195	.2628	.1062	.9495	.7928	.6361	.4795	.1661	.8527	.5394
664	.8898	.7331	.5764	.4198	.2631	.1064	.9498	.7931	.6364	.4797	.1664	.8531	.5397
667	.8900	.7334	.5767	.4200	.2634	.1067	.9500	.7934	.6367	.4800	.1667	.8534	.5400
421670	32.8903	33.7336	34.5769	35.4203	36.2636	37.1070	37.9503	38.7936	39.6370	40.4803	42.1670	43.8537	45.5404
673	.8905	.7338	.5772	.4205	.2639	.1072	.9506	.7939	.6373	.4806	.1673	.8540	.5407
676	.8907	.7341	.5774	.4208	.2641	.1075	.9508	.7942	.6375	.4809	.1676	.8543	.5410
679	.8910	.7343	.5777	.4210	.2644	.1078	.9511	.7945	.6378	.4812	.1679	.8546	.5413
682	.8912	.7346	.5779	.4213	.2647	.1080	.9514	.7947	.6381	.4815	.1682	.8549	.5417
421685	32.8914	33.7348	34.5782	35.4215	36.2649	37.1083	37.9517	38.7950	39.6384	40.4818	42.1685	43.8552	45.5420
688	.8917	.7350	.5784	.4218	.2652	.1085	.9519	.7953	.6387	.4820	.1688	.8556	.5423
691	.8919	.7353	.5787	.4220	.2654	.1088	.9522	.7956	.6390	.4823	.1691	.8559	.5426
694	.8921	.7355	.5789	.4223	.2657	.1091	.9525	.7958	.6392	.4826	.1694	.8562	.5430
697	.8924	.7358	.5792	.4225	.2659	.1093	.9527	.7961	.6395	.4829	.1697	.8565	.5433
421700	32.8926	33.7360	34.5794	35.4228	36.2662	37.1096	37.9530	38.7964	39.6398	40.4832	42.1700	43.8568	45.5436

R

MEGACYCLES PER SECOND

HARMONICS

BASIC FREQ.	52	54	56	58	60	62	64	66	68	70	72	74	76
422000	21.9440	22.7880	23.6320	24.4760	25.3200	26.1640	27.0080	27.8520	28.6960	29.5400	30.3840	31.2280	32.0720
003	.9442	.7882	.6322	.4762	.3202	.1642	.0082	.8522	.6962	.5402	.3842	.2282	.0722
006	.9443	.7883	.6323	.4763	.3204	.1644	.0084	.8524	.6964	.5404	.3844	.2284	.0725
009	.9445	.7885	.6325	.4765	.3205	.1646	.0086	.8526	.6966	.5406	.3846	.2287	.0727
012	.9446	.7886	.6327	.4767	.3207	.1647	.0088	.8528	.6968	.5408	.3849	.2289	.0729
422015	21.9448	22.7888	23.6328	24.4769	25.3209	26.1649	27.0090	27.8530	28.6970	29.5411	30.3851	31.2291	32.0731
018	.9449	.7890	.6330	.4770	.3211	.1651	.0092	.8532	.6972	.5413	.3853	.2293	.0734
021	.9451	.7891	.6332	.4772	.3213	.1653	.0093	.8534	.6974	.5415	.3855	.2296	.0736
024	.9452	.7893	.6333	.4774	.3214	.1655	.0095	.8536	.6976	.5417	.3857	.2298	.0738
027	.9454	.7895	.6335	.4776	.3216	.1657	.0097	.8538	.6978	.5419	.3859	.2300	.0741
422030	21.9456	22.7896	23.6337	24.4777	25.3218	26.1659	27.0099	27.8540	28.6980	29.5421	30.3862	31.2302	32.0743
033	.9457	.7898	.6338	.4779	.3220	.1660	.0101	.8542	.6982	.5423	.3864	.2304	.0745
036	.9459	.7899	.6340	.4781	.3222	.1662	.0103	.8544	.6984	.5425	.3866	.2307	.0747
039	.9460	.7901	.6342	.4783	.3223	.1664	.0105	.8546	.6987	.5427	.3868	.2309	.0750
042	.9462	.7903	.6344	.4784	.3225	.1666	.0107	.8548	.6989	.5429	.3870	.2311	.0752
422045	21.9463	22.7904	23.6345	24.4786	25.3227	26.1668	27.0109	27.8550	28.6991	29.5432	30.3872	31.2313	32.0754
048	.9465	.7906	.6347	.4788	.3229	.1670	.0111	.8552	.6993	.5434	.3875	.2316	.0756
051	.9467	.7908	.6349	.4790	.3231	.1672	.0113	.8554	.6995	.5436	.3877	.2318	.0759
054	.9468	.7909	.6350	.4791	.3232	.1673	.0115	.8556	.6997	.5438	.3879	.2320	.0761
057	.9470	.7911	.6352	.4793	.3234	.1675	.0116	.8558	.6999	.5440	.3881	.2322	.0763
422060	21.9471	22.7912	23.6354	24.4795	25.3236	26.1677	27.0118	27.8560	28.7001	29.5442	30.3883	31.2324	32.0766
063	.9473	.7914	.6355	.4797	.3238	.1679	.0120	.8562	.7003	.5444	.3885	.2327	.0768
066	.9474	.7916	.6357	.4798	.3240	.1681	.0122	.8564	.7005	.5446	.3888	.2329	.0770
069	.9476	.7917	.6359	.4800	.3241	.1683	.0124	.8566	.7007	.5448	.3890	.2331	.0772
072	.9477	.7919	.6360	.4802	.3243	.1685	.0126	.8568	.7009	.5450	.3892	.2333	.0775
422075	21.9479	22.7921	23.6362	24.4804	25.3245	26.1687	27.0128	27.8570	28.7011	29.5453	30.3894	31.2336	32.0777
078	.9481	.7922	.6364	.4805	.3247	.1688	.0130	.8571	.7013	.5455	.3896	.2338	.0779
081	.9482	.7924	.6365	.4807	.3249	.1690	.0132	.8573	.7015	.5457	.3898	.2340	.0782
084	.9484	.7925	.6367	.4809	.3250	.1692	.0134	.8575	.7017	.5459	.3900	.2342	.0784
087	.9485	.7927	.6369	.4810	.3252	.1694	.0136	.8577	.7019	.5461	.3903	.2344	.0786
422090	21.9487	22.7929	23.6370	24.4812	25.3254	26.1696	27.0138	27.8579	28.7021	29.5463	30.3905	31.2347	32.0788
093	.9488	.7930	.6372	.4814	.3256	.1698	.0140	.8581	.7023	.5465	.3907	.2349	.0791
096	.9490	.7932	.6374	.4816	.3258	.1700	.0141	.8583	.7025	.5467	.3909	.2351	.0793
099	.9491	.7933	.6375	.4817	.3259	.1701	.0143	.8585	.7027	.5469	.3911	.2353	.0795
102	.9493	.7935	.6377	.4819	.3261	.1703	.0145	.8587	.7029	.5471	.3913	.2355	.0798
422105	21.9495	22.7937	23.6379	24.4821	25.3263	26.1705	27.0147	27.8589	28.7031	29.5474	30.3916	31.2358	32.0800
108	.9496	.7938	.6380	.4823	.3265	.1707	.0149	.8591	.7033	.5476	.3918	.2360	.0802
111	.9498	.7940	.6382	.4824	.3267	.1709	.0151	.8593	.7035	.5478	.3920	.2362	.0804
114	.9499	.7942	.6384	.4826	.3268	.1711	.0153	.8595	.7038	.5480	.3922	.2364	.0807
117	.9501	.7943	.6386	.4828	.3270	.1713	.0155	.8597	.7040	.5482	.3924	.2367	.0809
422120	21.9502	22.7945	23.6387	24.4830	25.3272	26.1714	27.0157	27.8599	28.7042	29.5484	30.3926	31.2369	32.0811
123	.9504	.7946	.6389	.4831	.3274	.1716	.0159	.8601	.7044	.5486	.3929	.2371	.0813
126	.9506	.7948	.6391	.4833	.3276	.1718	.0161	.8603	.7046	.5488	.3931	.2373	.0816
129	.9507	.7950	.6392	.4835	.3277	.1720	.0163	.8605	.7048	.5490	.3933	.2375	.0818
132	.9509	.7951	.6394	.4837	.3279	.1722	.0164	.8607	.7050	.5492	.3935	.2378	.0820
422135	21.9510	22.7953	23.6396	24.4838	25.3281	26.1724	27.0166	27.8609	28.7052	29.5495	30.3937	31.2380	32.0823
138	.9512	.7955	.6397	.4840	.3283	.1726	.0168	.8611	.7054	.5497	.3939	.2382	.0825
141	.9513	.7956	.6399	.4842	.3285	.1727	.0170	.8613	.7056	.5499	.3942	.2384	.0827
144	.9515	.7958	.6401	.4844	.3286	.1729	.0172	.8615	.7058	.5501	.3944	.2387	.0829
147	.9516	.7959	.6402	.4845	.3288	.1731	.0174	.8617	.7060	.5503	.3946	.2389	.0832
422150	21.9518	22.7961	23.6404	24.4847	25.3290	26.1733	27.0176	27.8619	28.7062	29.5505	30.3948	31.2391	32.0834
153	.9520	.7963	.6406	.4849	.3292	.1735	.0178	.8621	.7064	.5507	.3950	.2393	.0836
156	.9521	.7964	.6407	.4850	.3294	.1737	.0180	.8623	.7066	.5509	.3952	.2395	.0839
159	.9523	.7966	.6409	.4852	.3295	.1739	.0182	.8625	.7068	.5511	.3954	.2398	.0841
162	.9524	.7967	.6411	.4854	.3297	.1740	.0184	.8627	.7070	.5513	.3957	.2400	.0843
422165	21.9526	22.7969	23.6412	24.4856	25.3299	26.1742	27.0186	27.8629	28.7072	29.5516	30.3959	31.2402	32.0845
168	.9527	.7971	.6414	.4857	.3301	.1744	.0188	.8631	.7074	.5518	.3961	.2404	.0848
171	.9529	.7972	.6416	.4859	.3303	.1746	.0189	.8633	.7076	.5520	.3963	.2407	.0850
174	.9530	.7974	.6417	.4861	.3304	.1748	.0191	.8635	.7078	.5522	.3965	.2409	.0852
177	.9532	.7976	.6419	.4863	.3306	.1750	.0193	.8637	.7080	.5524	.3967	.2411	.0855
422180	21.9534	22.7977	23.6421	24.4864	25.3308	26.1752	27.0195	27.8639	28.7082	29.5526	30.3970	31.2413	32.0857
183	.9535	.7979	.6422	.4866	.3310	.1753	.0197	.8641	.7084	.5528	.3972	.2415	.0859
186	.9537	.7980	.6424	.4868	.3312	.1755	.0199	.8643	.7086	.5530	.3974	.2418	.0861
189	.9538	.7982	.6426	.4870	.3313	.1757	.0201	.8645	.7089	.5532	.3976	.2420	.0864
192	.9540	.7984	.6428	.4871	.3315	.1759	.0203	.8647	.7091	.5534	.3978	.2422	.0866
422195	21.9541	22.7985	23.6429	24.4873	25.3317	26.1761	27.0205	27.8649	28.7093	29.5537	30.3980	31.2424	32.0868
198	.9543	.7987	.6431	.4875	.3319	.1763	.0207	.8651	.7095	.5539	.3983	.2427	.0870
201	.9545	.7989	.6433	.4877	.3321	.1765	.0209	.8653	.7097	.5541	.3985	.2429	.0873
204	.9546	.7990	.6434	.4878	.3322	.1766	.0211	.8655	.7099	.5543	.3987	.2431	.0875
207	.9548	.7992	.6436	.4880	.3324	.1768	.0212	.8657	.7101	.5545	.3989	.2433	.0877
422210	21.9549	22.7993	23.6438	24.4882	25.3326	26.1770	27.0214	27.8659	28.7103	29.5547	30.3991	31.2435	32.0880
213	.9551	.7995	.6439	.4884	.3328	.1772	.0216	.8661	.7105	.5549	.3993	.2438	.0882
216	.9552	.7997	.6441	.4885	.3330	.1774	.0218	.8663	.7107	.5551	.3996	.2440	.0884
219	.9554	.7998	.6443	.4887	.3331	.1776	.0220	.8665	.7109	.5553	.3998	.2442	.0886
222	.9555	.8000	.6444	.4889	.3333	.1778	.0222	.8667	.7111	.5555	.4000	.2444	.0889
422225	21.9557	22.8002	23.6446	24.4891	25.3335	26.1780	27.0224	27.8669	28.7113	29.5558	30.4002	31.2447	32.0891
228	.9559	.8003	.6448	.4892	.3337	.1781	.0226	.8670	.7115	.5560	.4004	.2449	.0893
231	.9560	.8005	.6449	.4894	.3339	.1783	.0228	.8672	.7117	.5562	.4006	.2451	.0896
234	.9562	.8006	.6451	.4896	.3340	.1785	.0230	.8674	.7119	.5564	.4008	.2453	.0898
237	.9563	.8008	.6453	.4897	.3342	.1787	.0232	.8676	.7121	.5566	.4011	.2455	.0900
422240	21.9565	22.8010	23.6454	24.4899	25.3344	26.1789	27.0234	27.8678	28.7123	29.5568	30.4013	31.2458	32.0902
243	.9566	.8011	.6456	.4901	.3346	.1791	.0236	.8680	.7125	.5570	.4015	.2460	.0905
246	.9568	.8013	.6458	.4903	.3348	.1793	.0237	.8682	.7127	.5572	.4017	.2462	.0907
249	.9569	.8014	.6459	.4904	.3349	.1794	.0239	.8684	.7129	.5574	.4019	.2464	.0909
252	.9571	.8016	.6461	.4906	.3351	.1796	.0241	.8686	.7131	.5576	.4021	.2466	.0912
422255	21.9573	22.8018	23.6463	24.4908	25.3353	26.1798	27.0243	27.8688	28.7133	29.5579	30.4024	31.2469	32.0914
258	.9574	.8019	.6464	.4910	.3355	.1800	.0245	.8690	.7135	.5581	.4026	.2471	.0916
261	.9576	.8021	.6466	.4911	.3357	.1802	.0247	.8692	.7137	.5583	.4028	.2473	.0918
264	.9577	.8023	.6468	.4913	.3358	.1804	.0249	.8694	.7140	.5585	.4030	.2475	.0921
267	.9579	.8024	.6470	.4915	.3360	.1806	.0251	.8696	.7142	.5587	.4032	.2478	.0923
422270	21.9580	22.8026	23.6471	24.4917	25.3362	26.1807	27.0253	27.8698	28.7144	29.5589	30.4034	31.2480	32.0925
273	.9582	.8027	.6473	.4918	.3364	.1809	.0255	.8700	.7146	.5591	.4037	.2482	.0927
276	.9584	.8029	.6475	.4920	.3366	.1811	.0257	.8702	.7148	.5593	.4039	.2484	.0930
279	.9585	.8031	.6476	.4922	.3367	.1813	.0259	.8704	.7150	.5595	.4041	.2486	.0932
282	.9587	.8032	.6478	.4924	.3369	.1815	.0260	.8706	.7152	.5597	.4043	.2489	.0934
422285	21.9588	22.8034	23.6480	24.4925	25.3371	26.1817	27.0262	27.8708	28.7154	29.5600	30.4045	31.2491	32.0937
288	.9590	.8036	.6481	.4927	.3373	.1819	.0264	.8710	.7156	.5602	.4047	.2493	.0939
291	.9591	.8037	.6483	.4929	.3375	.1820	.0266	.8712	.7158	.5604	.4050	.2495	.0941
294	.9593	.8039	.6485	.4931	.3376	.1822	.0268	.8714	.7160	.5606	.4052	.2498	.0943
297	.9594	.8040	.6486	.4932	.3378	.1824	.0270	.8716	.7162	.5608	.4054	.2500	.0946
422300	21.9596	22.8042	23.6488	24.4934	25.3380	26.1826	27.0272	27.8718	28.7164	29.5610	30.4056	31.2502	32.0948

MEGACYCLES PER SECOND

HARMONICS

BASIC FREQ.	78	80	82	84	86	88	90	92	94	96	100	104	108
422000	32.9160	33.7600	34.6040	35.4480	36.2920	37.1360	37.9800	38.8240	39.6680	40.5120	42.2000	43.8880	45.5760
003	.9162	.7602	.6042	.4483	.2923	.1363	.9803	.8243	.6683	.5123	.2003	.8883	.5763
006	.9165	.7605	.6045	.4485	.2925	.1365	.9805	.8246	.6686	.5126	.2006	.8886	.5766
009	.9167	.7607	.6047	.4488	.2928	.1368	.9808	.8248	.6688	.5129	.2009	.8889	.5770
012	.9169	.7610	.6050	.4490	.2930	.1371	.9811	.8251	.6691	.5132	.2012	.8892	.5773
422015	32.9172	33.7612	34.6052	35.4493	36.2933	37.1373	37.9814	38.8254	39.6694	40.5134	42.2015	43.8896	45.5776
018	.9174	.7614	.6055	.4495	.2935	.1376	.9816	.8257	.6697	.5137	.2018	.8899	.5779
021	.9176	.7617	.6057	.4498	.2938	.1378	.9819	.8259	.6700	.5140	.2021	.8902	.5783
024	.9179	.7619	.6060	.4500	.2941	.1381	.9822	.8262	.6703	.5143	.2024	.8905	.5786
027	.9181	.7622	.6062	.4503	.2943	.1384	.9824	.8265	.6705	.5146	.2027	.8908	.5789
422030	32.9183	33.7624	34.6065	35.4505	36.2946	37.1386	37.9827	38.8268	39.6708	40.5149	42.2030	43.8911	45.5792
033	.9186	.7626	.6067	.4508	.2948	.1389	.9830	.8270	.6711	.5152	.2033	.8914	.5796
036	.9188	.7629	.6070	.4510	.2951	.1392	.9832	.8273	.6714	.5155	.2036	.8917	.5799
039	.9190	.7631	.6072	.4513	.2954	.1394	.9835	.8276	.6717	.5157	.2039	.8921	.5802
042	.9193	.7634	.6074	.4515	.2956	.1397	.9838	.8279	.6719	.5160	.2042	.8924	.5805
422045	32.9195	33.7636	34.6077	35.4518	36.2959	37.1400	37.9841	38.8281	39.6722	40.5163	42.2045	43.8927	45.5809
048	.9197	.7638	.6079	.4520	.2961	.1402	.9843	.8284	.6725	.5166	.2048	.8930	.5812
051	.9200	.7641	.6082	.4523	.2964	.1405	.9846	.8287	.6728	.5169	.2051	.8933	.5815
054	.9202	.7643	.6084	.4525	.2966	.1408	.9849	.8290	.6731	.5172	.2054	.8936	.5818
057	.9204	.7646	.6087	.4528	.2969	.1410	.9851	.8292	.6734	.5175	.2057	.8939	.5822
422060	32.9207	33.7648	34.6089	35.4530	36.2972	37.1413	37.9854	38.8295	39.6736	40.5178	42.3060	43.8942	45.5825
063	.9209	.7650	.6092	.4533	.2974	.1415	.9857	.8298	.6739	.5180	.2063	.8946	.5828
066	.9211	.7653	.6094	.4535	.2977	.1418	.9859	.8301	.6742	.5183	.2066	.8949	.5831
069	.9214	.7655	.6097	.4538	.2979	.1421	.9862	.8303	.6745	.5186	.2069	.8952	.5835
072	.9216	.7658	.6099	.4540	.2982	.1423	.9865	.8306	.6748	.5189	.2072	.8955	.5838
422075	32.9219	33.7660	34.6102	35.4543	36.2985	37.1426	37.9868	38.8309	39.6751	40.5192	42.2075	43.8958	45.5841
078	.9221	.7662	.6104	.4546	.2987	.1429	.9870	.8312	.6753	.5195	.2078	.8961	.5844
081	.9223	.7665	.6106	.4548	.2990	.1431	.9873	.8315	.6756	.5198	.2081	.8964	.5847
084	.9226	.7667	.6109	.4551	.2992	.1434	.9876	.8317	.6759	.5201	.2084	.8967	.5851
087	.9228	.7670	.6111	.4553	.2995	.1437	.9878	.8320	.6762	.5204	.2087	.8970	.5854
422090	32.9230	33.7672	34.6114	35.4556	36.2997	37.1439	37.9881	38.8323	39.6765	40.5206	42.2090	43.8974	45.5857
093	.9233	.7674	.6116	.4558	.3000	.1442	.9884	.8326	.6767	.5209	.2093	.8977	.5860
096	.9235	.7677	.6119	.4561	.3003	.1444	.9886	.8328	.6770	.5212	.2096	.8980	.5864
099	.9237	.7679	.6121	.4563	.3005	.1447	.9889	.8331	.6773	.5215	.2099	.8983	.5867
102	.9240	.7682	.6124	.4566	.3008	.1450	.9892	.8334	.6776	.5218	.2102	.8986	.5870
422105	32.9242	33.7684	34.6126	35.4568	36.3010	37.1452	37.9895	38.8337	39.6779	40.5221	42.2105	43.8989	45.5873
108	.9244	.7686	.6129	.4571	.3013	.1455	.9897	.8339	.6782	.5224	.2108	.8992	.5877
111	.9247	.7689	.6131	.4573	.3015	.1458	.9900	.8342	.6784	.5227	.2111	.8995	.5880
114	.9249	.7691	.6133	.4576	.3018	.1460	.9903	.8345	.6787	.5229	.2114	.8999	.5883
117	.9251	.7694	.6136	.4578	.3021	.1463	.9905	.8348	.6790	.5232	.2117	.9002	.5886
422120	32.9254	33.7696	34.6138	35.4581	36.3023	37.1466	37.9908	38.8350	39.6793	40.5235	42.2120	43.9005	45.5890
123	.9256	.7698	.6141	.4583	.3026	.1468	.9911	.8353	.6796	.5238	.2123	.9008	.5893
126	.9258	.7701	.6143	.4586	.3028	.1471	.9913	.8356	.6798	.5241	.2126	.9011	.5896
129	.9261	.7703	.6146	.4588	.3031	.1474	.9916	.8359	.6810	.5244	.2129	.9014	.5899
132	.9263	.7706	.6148	.4591	.3034	.1476	.9919	.8361	.6804	.5247	.2132	.9017	.5903
422135	32.9265	33.7708	34.6151	35.4593	36.3036	37.1479	37.9922	38.8364	39.6807	40.5250	42.2135	43.9020	45.5906
138	.9268	.7710	.6153	.4596	.3039	.1481	.9924	.8367	.6810	.5252	.2138	.9024	.5909
141	.9270	.7713	.6156	.4598	.3041	.1484	.9927	.8370	.6813	.5255	.2141	.9027	.5912
144	.9272	.7715	.6158	.4601	.3044	.1487	.9930	.8372	.6815	.5258	.2144	.9030	.5916
147	.9275	.7718	.6161	.4603	.3046	.1489	.9932	.8375	.6818	.5261	.2147	.9033	.5919
422150	32.9277	33.7720	34.6163	35.4606	36.3049	37.1492	37.9935	38.8378	39.6821	40.5264	42.2150	43.9036	45.5922
153	.9279	.7722	.6165	.4609	.3052	.1495	.9938	.8381	.6824	.5267	.2153	.9039	.5925
156	.9282	.7725	.6168	.4611	.3054	.1497	.9940	.8384	.6827	.5270	.2156	.9042	.5928
159	.9284	.7727	.6170	.4614	.3057	.1500	.9943	.8386	.6829	.5273	.2159	.9045	.5932
162	.9286	.7730	.6173	.4616	.3059	.1503	.9946	.8389	.6832	.5276	.2162	.9048	.5935
422165	32.9289	33.7732	34.6175	35.4619	36.3062	37.1505	37.9949	38.8392	39.6835	40.5278	42.2165	43.9052	45.5938
168	.9291	.7734	.6178	.4621	.3064	.1508	.9951	.8395	.6838	.5281	.2168	.9055	.5941
171	.9293	.7737	.6180	.4624	.3067	.1510	.9954	.8397	.6841	.5284	.2171	.9058	.5945
174	.9296	.7739	.6183	.4626	.3070	.1513	.9957	.8400	.6844	.5287	.2174	.9061	.5948
177	.9298	.7742	.6185	.4629	.3072	.1516	.9959	.8403	.6846	.5290	.2177	.9064	.5951
422180	32.9300	33.7744	34.6188	35.4631	36.3075	37.1518	37.9962	38.8406	39.6849	40.5293	42.2180	43.9067	45.5954
183	.9303	.7746	.6190	.4634	.3077	.1521	.9965	.8408	.6852	.5296	.2183	.9070	.5958
186	.9305	.7749	.6193	.4636	.3080	.1524	.9967	.8411	.6855	.5299	.2186	.9073	.5961
189	.9307	.7751	.6195	.4639	.3083	.1526	.9970	.8414	.6858	.5301	.2189	.9077	.5964
192	.9310	.7754	.6197	.4641	.3085	.1529	.9973	.8417	.6860	.5304	.2192	.9080	.5967
422195	32.9312	33.7756	34.6200	35.4644	36.3088	37.1532	37.9976	38.8419	39.6863	40.5307	42.2195	43.9083	45.5971
198	.9314	.7758	.6202	.4646	.3090	.1534	.9978	.8422	.6866	.5310	.2198	.9086	.5974
201	.9317	.7761	.6205	.4649	.3093	.1537	.9981	.8425	.6869	.5313	.2201	.9089	.5977
204	.9319	.7763	.6207	.4651	.3095	.1540	.9984	.8428	.6872	.5316	.2204	.9092	.5980
207	.9321	.7766	.6210	.4654	.3098	.1542	.9986	.8430	.6875	.5319	.2207	.9095	.5984
422210	32.9324	33.7768	34.6212	35.4656	36.3101	37.1545	37.9989	38.8433	39.6877	40.5322	42.2210	43.9098	45.5987
213	.9326	.7770	.6215	.4659	.3103	.1547	.9992	.8436	.6880	.5324	.2213	.9102	.5990
216	.9328	.7773	.6217	.4661	.3106	.1550	.9994	.8439	.6883	.5327	.2216	.9105	.5993
219	.9331	.7775	.6220	.4664	.3108	.1553	.9997	.8441	.6886	.5330	.2219	.9108	.5997
222	.9333	.7778	.6222	.4666	.3111	.1555	38.0000	.8444	.6889	.5333	.2222	.9111	.6000
422225	32.9336	33.7780	34.6225	35.4669	36.3114	37.1558	38.0003	38.8447	39.6892	40.5336	42.2225	43.9114	45.6003
228	.9338	.7782	.6227	.4672	.3116	.1561	.0005	.8450	.6894	.5339	.2228	.9117	.6006
231	.9340	.7785	.6229	.4674	.3119	.1563	.0008	.8453	.6897	.5342	.2231	.9120	.6009
234	.9343	.7787	.6232	.4677	.3121	.1566	.0011	.8455	.6900	.5345	.2234	.9123	.6013
237	.9345	.7790	.6234	.4679	.3124	.1569	.0013	.8458	.6903	.5348	.2237	.9126	.6016
422240	32.9347	33.7792	34.6237	35.4682	36.3126	37.1571	38.0016	38.8461	39.6906	40.5350	42.2240	43.9130	45.6019
243	.9350	.7794	.6239	.4684	.3129	.1574	.0019	.8464	.6908	.5353	.2243	.9133	.6022
246	.9352	.7797	.6242	.4687	.3132	.1576	.0021	.8466	.6911	.5356	.2246	.9136	.6025
249	.9354	.7799	.6244	.4689	.3134	.1579	.0024	.8469	.6914	.5359	.2249	.9139	.6029
252	.9357	.7802	.6247	.4692	.3137	.1582	.0027	.8472	.6917	.5362	.2252	.9142	.6032
422255	32.9359	33.7804	34.6249	35.4694	36.3139	37.1584	38.0030	38.8475	39.6920	40.5365	42.2255	43.9145	45.6035
258	.9361	.7806	.6252	.4697	.3142	.1587	.0032	.8477	.6923	.5368	.2258	.9148	.6039
261	.9364	.7809	.6254	.4699	.3144	.1590	.0035	.8480	.6925	.5371	.2261	.9151	.6042
264	.9366	.7811	.6256	.4702	.3147	.1592	.0038	.8483	.6928	.5373	.2264	.9155	.6045
267	.9368	.7814	.6259	.4704	.3150	.1595	.0040	.8486	.6931	.5376	.2267	.9158	.6048
422270	32.9371	33.7816	34.6261	35.4707	36.3152	37.1598	38.0043	38.8488	39.6934	40.5379	42.2270	43.9161	45.6052
273	.9373	.7818	.6264	.4709	.3155	.1600	.0046	.8491	.6937	.5382	.2273	.9164	.6055
276	.9375	.7821	.6266	.4712	.3157	.1603	.0048	.8494	.6939	.5385	.2276	.9167	.6058
279	.9378	.7823	.6269	.4714	.3160	.1606	.0051	.8497	.6942	.5388	.2279	.9170	.6061
282	.9380	.7826	.6271	.4717	.3163	.1608	.0054	.8499	.6945	.5391	.2282	.9173	.6065
422285	32.9382	33.7828	34.6274	35.4719	36.3165	37.1611	38.0057	38.8502	39.6948	40.5394	42.2285	43.9176	45.6068
288	.9385	.7830	.6276	.4722	.3168	.1613	.0059	.8505	.6951	.5396	.2288	.9180	.6071
291	.9387	.7833	.6279	.4724	.3170	.1616	.0062	.8508	.6954	.5399	.2291	.9183	.6074
294	.9389	.7835	.6281	.4727	.3173	.1619	.0065	.8510	.6956	.5402	.2294	.9186	.6078
297	.9392	.7838	.6284	.4729	.3175	.1621	.0067	.8513	.6959	.5405	.2297	.9189	.6081
422300	32.9394	33.7840	34.6286	35.4732	36.3178	37.1624	38.0070	38.8516	39.6962	40.5408	42.2300	43.9192	45.6084

HARMONICS

BASIC FREQ.	52	54	56	58	60	62	64	66	68	70	72	74	76
422300	21.9596	22.8042	23.6488	24.4934	25.3380	26.1826	27.0272	27.8718	28.7164	29.5610	30.4056	31.2502	32.0948
303	.9598	.8044	.6490	.4936	.3382	.1828	.0274	.8720	.7166	.5612	.4058	.2504	.0950
306	.9599	.8045	.6491	.4937	.3384	.1830	.0276	.8722	.7168	.5614	.4060	.2506	.0953
309	.9601	.8047	.6493	.4939	.3385	.1832	.0278	.8724	.7170	.5616	.4062	.2509	.0955
312	.9602	.8048	.6495	.4941	.3387	.1833	.0280	.8726	.7172	.5618	.4065	.2511	.0957
422315	21.9604	22.8050	23.6496	24.4943	25.3389	26.1835	27.0282	27.8728	28.7174	29.5621	30.4067	31.2513	32.0959
318	.9605	.8052	.6498	.4944	.3391	.1837	.0284	.8730	.7176	.5623	.4069	.2515	.0962
321	.9607	.8053	.6500	.4946	.3393	.1839	.0285	.8732	.7178	.5625	.4071	.2518	.0964
324	.9608	.8055	.6501	.4948	.3394	.1841	.0287	.8734	.7180	.5627	.4073	.2520	.0966
327	.9610	.8057	.6503	.4950	.3396	.1843	.0289	.8736	.7182	.5629	.4075	.2522	.0969
422330	21.9612	22.8058	23.6505	24.4951	25.3398	26.1845	27.0291	27.8738	28.7184	29.5631	30.4078	31.2524	32.0971
333	.9613	.8060	.6506	.4953	.3400	.1846	.0293	.8740	.7186	.5633	.4080	.2526	.0973
336	.9615	.8061	.6508	.4955	.3402	.1848	.0295	.8742	.7188	.5635	.4082	.2529	.0975
339	.9616	.8063	.6510	.4957	.3403	.1850	.0297	.8744	.7191	.5637	.4084	.2531	.0978
342	.9618	.8065	.6512	.4958	.3405	.1852	.0299	.8746	.7193	.5639	.4086	.2533	.0980
422345	21.9619	22.8066	23.6513	24.4960	25.3407	26.1854	27.0301	27.8748	28.7195	29.5642	30.4088	31.2535	32.0982
348	.9621	.8068	.6515	.4962	.3409	.1856	.0303	.8750	.7197	.5644	.4091	.2538	.0984
351	.9623	.8070	.6517	.4964	.3411	.1858	.0305	.8752	.7199	.5646	.4093	.2540	.0987
354	.9624	.8071	.6518	.4965	.3412	.1859	.0307	.8754	.7201	.5648	.4095	.2542	.0989
357	.9626	.8073	.6520	.4967	.3414	.1861	.0308	.8756	.7203	.5650	.4097	.2544	.0991
422360	21.9627	22.8074	23.6522	24.4969	25.3416	26.1863	27.0310	27.8758	28.7205	29.5652	30.4099	31.2546	32.0994
363	.9629	.8076	.6523	.4971	.3418	.1865	.0312	.8760	.7207	.5654	.4101	.2549	.0996
366	.9630	.8078	.6525	.4972	.3420	.1867	.0314	.8762	.7209	.5656	.4104	.2551	.0998
369	.9632	.8079	.6527	.4974	.3421	.1869	.0316	.8764	.7211	.5658	.4106	.2553	.1000
372	.9633	.8081	.6528	.4976	.3423	.1871	.0318	.8766	.7213	.5660	.4108	.2555	.1003
422375	21.9635	22.8083	23.6530	24.4978	25.3425	26.1873	27.0320	27.8768	28.7215	29.5663	30.4110	31.2558	32.1005
378	.9637	.8084	.6532	.4979	.3427	.1874	.0322	.8769	.7217	.5665	.4112	.2560	.1007
381	.9638	.8086	.6533	.4981	.3429	.1876	.0324	.8771	.7219	.5667	.4114	.2562	.1010
384	.9640	.8087	.6535	.4983	.3430	.1878	.0326	.8773	.7221	.5669	.4116	.2564	.1012
387	.9641	.8089	.6537	.4984	.3432	.1880	.0328	.8775	.7223	.5671	.4119	.2566	.1014
422390	21.9643	22.8091	23.6538	24.4986	25.3434	26.1882	27.0330	27.8777	28.7225	29.5673	30.4121	31.2569	32.1016
393	.9644	.8092	.6540	.4988	.3436	.1884	.0332	.8779	.7227	.5675	.4123	.2571	.1019
396	.9646	.8094	.6542	.4990	.3438	.1886	.0333	.8781	.7229	.5677	.4125	.2573	.1021
399	.9647	.8095	.6543	.4991	.3439	.1887	.0335	.8783	.7231	.5679	.4127	.2575	.1023
402	.9649	.8097	.6545	.4993	.3441	.1889	.0337	.8785	.7233	.5681	.4129	.2577	.1026
422405	21.9651	22.8099	23.6547	24.4995	25.3443	26.1891	27.0339	27.8787	28.7235	29.5684	30.4132	31.2580	32.1028
408	.9652	.8100	.6548	.4997	.3445	.1893	.0341	.8789	.7237	.5686	.4134	.2582	.1030
411	.9654	.8102	.6550	.4998	.3447	.1895	.0343	.8791	.7239	.5688	.4136	.2584	.1032
414	.9655	.8104	.6552	.5000	.3448	.1897	.0345	.8793	.7242	.5690	.4138	.2586	.1035
417	.9657	.8105	.6554	.5002	.3450	.1899	.0347	.8795	.7244	.5692	.4140	.2589	.1037
422420	21.9658	22.8107	23.6555	24.5004	25.3452	26.1900	27.0349	27.8797	28.7246	29.5694	30.4142	31.2591	32.1039
423	.9660	.8108	.6557	.5005	.3454	.1902	.0351	.8799	.7248	.5696	.4145	.2593	.1041
426	.9662	.8110	.6559	.5007	.3456	.1904	.0353	.8801	.7250	.5698	.4147	.2595	.1044
429	.9663	.8112	.6560	.5009	.3457	.1906	.0355	.8803	.7252	.5700	.4149	.2597	.1046
432	.9665	.8113	.6562	.5011	.3459	.1908	.0356	.8805	.7254	.5702	.4151	.2600	.1048
422435	21.9666	22.8115	23.6564	24.5012	25.3461	26.1910	27.0358	27.8807	28.7256	29.5705	30.4153	31.2602	32.1051
438	.9668	.8117	.6565	.5014	.3463	.1912	.0360	.8809	.7258	.5707	.4155	.2604	.1053
441	.9669	.8118	.6567	.5016	.3465	.1913	.0362	.8811	.7260	.5709	.4158	.2606	.1055
444	.9671	.8120	.6569	.5018	.3466	.1915	.0364	.8813	.7262	.5711	.4160	.2609	.1057
447	.9672	.8121	.6570	.5019	.3468	.1917	.0366	.8815	.7264	.5713	.4162	.2611	.1060
422450	21.9674	22.8123	23.6572	24.5021	25.3470	26.1919	27.0368	27.8817	28.7266	29.5715	30.4164	31.2613	32.1062
453	.9676	.8125	.6574	.5023	.3472	.1921	.0370	.8819	.7268	.5717	.4166	.2615	.1064
456	.9677	.8126	.6575	.5024	.3474	.1923	.0372	.8821	.7270	.5719	.4168	.2617	.1067
459	.9679	.8128	.6577	.5026	.3475	.1925	.0374	.8823	.7272	.5721	.4170	.2620	.1069
462	.9680	.8129	.6579	.5028	.3477	.1926	.0376	.8825	.7274	.5723	.4173	.2622	.1071
422465	21.9682	22.8131	23.6580	24.5030	25.3479	26.1928	27.0378	27.8827	28.7276	29.5726	30.4175	31.2624	32.1073
468	.9683	.8133	.6582	.5031	.3481	.1930	.0380	.8829	.7278	.5728	.4177	.2626	.1076
471	.9685	.8134	.6584	.5033	.3483	.1932	.0381	.8831	.7280	.5730	.4179	.2629	.1078
474	.9686	.8136	.6585	.5035	.3484	.1934	.0383	.8833	.7282	.5732	.4181	.2631	.1080
477	.9688	.8138	.6587	.5037	.3486	.1936	.0385	.8835	.7284	.5734	.4183	.2633	.1083
422480	21.9690	22.8139	23.6589	24.5038	25.3488	26.1938	27.0387	27.8837	28.7286	29.5736	30.4186	31.2635	32.1085
483	.9691	.8141	.6590	.5040	.3490	.1939	.0389	.8839	.7288	.5738	.4188	.2637	.1087
486	.9693	.8142	.6592	.5042	.3492	.1941	.0391	.8841	.7290	.5740	.4190	.2640	.1089
489	.9694	.8144	.6594	.5044	.3493	.1943	.0393	.8843	.7293	.5742	.4192	.2642	.1092
492	.9696	.8146	.6596	.5045	.3495	.1945	.0395	.8845	.7295	.5744	.4194	.2644	.1094
422495	21.9697	22.8147	23.6597	24.5047	25.3497	26.1947	27.0397	27.8847	28.7297	29.5747	30.4196	31.2646	32.1096
498	.9699	.8149	.6599	.5049	.3499	.1949	.0399	.8849	.7299	.5749	.4199	.2649	.1098
501	.9701	.8151	.6601	.5051	.3501	.1951	.0401	.8851	.7301	.5751	.4201	.2651	.1101
504	.9702	.8152	.6602	.5052	.3502	.1952	.0403	.8853	.7303	.5753	.4203	.2653	.1103
507	.9704	.8154	.6604	.5054	.3504	.1954	.0404	.8855	.7305	.5755	.4205	.2655	.1105
422510	21.9705	22.8155	23.6606	24.5056	25.3506	26.1956	27.0406	27.8857	28.7307	29.5757	30.4207	31.2657	32.1108
513	.9707	.8157	.6607	.5058	.3508	.1958	.0408	.8859	.7309	.5759	.4209	.2660	.1110
516	.9708	.8159	.6609	.5059	.3510	.1960	.0410	.8861	.7311	.5761	.4212	.2662	.1112
519	.9710	.8160	.6611	.5061	.3511	.1962	.0412	.8863	.7313	.5763	.4214	.2664	.1114
522	.9711	.8162	.6612	.5063	.3513	.1964	.0414	.8865	.7315	.5764	.4216	.2666	.1117
422525	21.9713	22.8164	23.6614	24.5065	25.3515	26.1966	27.0416	27.8867	28.7317	29.5768	30.4218	31.2669	32.1119
528	.9715	.8165	.6616	.5066	.3517	.1967	.0418	.8868	.7319	.5770	.4220	.2671	.1121
531	.9716	.8167	.6617	.5068	.3519	.1969	.0420	.8870	.7321	.5772	.4222	.2673	.1124
534	.9718	.8168	.6619	.5070	.3520	.1971	.0422	.8872	.7323	.5774	.4224	.2675	.1126
537	.9719	.8170	.6621	.5071	.3522	.1973	.0424	.8874	.7325	.5776	.4227	.2677	.1128
422540	21.9721	22.8172	23.6622	24.5073	25.3524	26.1975	27.0426	27.8876	28.7327	29.5778	30.4229	31.2680	32.1130
543	.9722	.8173	.6624	.5075	.3526	.1977	.0428	.8878	.7329	.5780	.4231	.2682	.1133
546	.9724	.8175	.6626	.5077	.3528	.1979	.0429	.8880	.7331	.5782	.4233	.2684	.1135
549	.9725	.8176	.6627	.5078	.3529	.1980	.0431	.8882	.7333	.5784	.4235	.2686	.1137
552	.9727	.8178	.6629	.5080	.3531	.1982	.0433	.8884	.7335	.5786	.4237	.2688	.1140
422555	21.9729	22.8180	23.6631	24.5082	25.3533	26.1984	27.0435	27.8886	28.7337	29.5789	30.4240	31.2691	32.1142
558	.9730	.8181	.6632	.5084	.3535	.1986	.0437	.8888	.7339	.5791	.4242	.2693	.1144
561	.9732	.8183	.6634	.5085	.3537	.1988	.0439	.8890	.7341	.5793	.4244	.2695	.1146
564	.9733	.8185	.6636	.5087	.3538	.1990	.0441	.8892	.7344	.5795	.4246	.2697	.1149
567	.9735	.8186	.6638	.5089	.3540	.1992	.0443	.8894	.7346	.5797	.4248	.2700	.1151
422570	21.9736	22.8188	23.6639	24.5091	25.3542	26.1993	27.0445	27.8896	28.7348	29.5799	30.4250	31.2702	32.1153
573	.9738	.8189	.6641	.5092	.3544	.1995	.0447	.8898	.7350	.5801	.4253	.2704	.1155
576	.9740	.8191	.6643	.5094	.3546	.1997	.0449	.8900	.7352	.5803	.4255	.2706	.1158
579	.9741	.8193	.6644	.5096	.3547	.1999	.0451	.8902	.7354	.5805	.4257	.2708	.1160
582	.9743	.8194	.6646	.5098	.3549	.2001	.0452	.8904	.7356	.5807	.4259	.2711	.1162
422585	21.9744	22.8196	23.6648	24.5099	25.3551	26.2003	27.0454	27.8906	28.7358	29.5810	30.4261	31.2713	32.1165
588	.9746	.8198	.6649	.5101	.3553	.2005	.0456	.8908	.7360	.5812	.4263	.2715	.1167
591	.9747	.8199	.6651	.5103	.3555	.2006	.0458	.8910	.7362	.5814	.4266	.2717	.1169
594	.9749	.8201	.6653	.5105	.3556	.2008	.0460	.8912	.7364	.5816	.4268	.2720	.1171
597	.9750	.8202	.6654	.5106	.3558	.2010	.0462	.8914	.7366	.5818	.4270	.2722	.1174
422600	21.9752	22.8204	23.6656	24.5108	25.3560	26.2012	27.0464	27.8916	28.7368	29.5820	30.4272	31.2724	32.1176

MEGACYCLES PER SECOND

HARMONICS

BASIC FREQ.	78	80	82	84	86	88	90	92	94	96	100	104	108
422300	32.9394	33.7840	34.6286	35.4732	36.3178	37.1624	38.0070	38.8516	39.6962	40.5408	42.2300	43.9192	45.6084
303	.9396	.7842	.6288	.4735	.3181	.1627	.0073	.8519	.6965	.5411	.2303	.9195	.6087
306	.9399	.7845	.6291	.4737	.3183	.1629	.0075	.8522	.6968	.5414	.2306	.9198	.6090
309	.9401	.7847	.6293	.4740	.3186	.1632	.0078	.8524	.6970	.5417	.2309	.9201	.6094
312	.9403	.7850	.6296	.4742	.3188	.1635	.0081	.8527	.6973	.5420	.2312	.9204	.6097
422315	32.9406	33.7852	34.6298	35.4745	36.3191	37.1637	38.0084	38.8530	39.6976	40.5422	42.2315	43.9208	45.6100
318	.9408	.7854	.6301	.4747	.3193	.1640	.0086	.8533	.6979	.5425	.2318	.9211	.6103
321	.9410	.7857	.6303	.4750	.3196	.1642	.0089	.8535	.6982	.5428	.2321	.9214	.6107
324	.9413	.7859	.6306	.4752	.3199	.1645	.0092	.8538	.6985	.5431	.2324	.9217	.6110
327	.9415	.7862	.6308	.4755	.3201	.1648	.0094	.8541	.6987	.5434	.2327	.9220	.6113
422330	32.9417	33.7864	34.6311	35.4757	36.3204	37.1650	38.0097	38.8544	39.6990	40.5437	42.2330	43.9223	45.6116
333	.9420	.7866	.6313	.4760	.3206	.1653	.0100	.8546	.6993	.5440	.2333	.9226	.6120
336	.9422	.7869	.6316	.4762	.3209	.1656	.0102	.8549	.6996	.5443	.2336	.9229	.6123
339	.9424	.7871	.6318	.4765	.3212	.1658	.0105	.8552	.6999	.5445	.2339	.9233	.6126
342	.9427	.7874	.6320	.4767	.3214	.1661	.0108	.8555	.7001	.5448	.2342	.9236	.6129
422345	32.9429	33.7876	34.6323	35.4770	36.3217	37.1664	38.0111	38.8557	39.7004	40.5451	42.2345	43.9239	45.6133
348	.9431	.7878	.6325	.4772	.3219	.1666	.0113	.8560	.7007	.5454	.2348	.9242	.6136
351	.9434	.7881	.6328	.4775	.3222	.1669	.0116	.8563	.7010	.5457	.2351	.9245	.6139
354	.9436	.7883	.6330	.4777	.3224	.1672	.0119	.8566	.7013	.5460	.2354	.9248	.6142
357	.9438	.7886	.6333	.4780	.3227	.1674	.0121	.8568	.7016	.5463	.2357	.9251	.6146
422360	32.9441	33.7888	34.6335	35.4782	36.3230	37.1677	38.0124	38.8571	39.7018	40.5466	42.2360	43.9254	45.6149
363	.9443	.7890	.6338	.4785	.3232	.1679	.0127	.8574	.7021	.5468	.2363	.9258	.6152
366	.9445	.7893	.6340	.4787	.3235	.1682	.0129	.8577	.7024	.5471	.2366	.9261	.6155
369	.9448	.7895	.6343	.4790	.3237	.1685	.0132	.8579	.7027	.5474	.2369	.9264	.6159
372	.9450	.7898	.6345	.4792	.3240	.1687	.0135	.8582	.7030	.5477	.2372	.9267	.6162
422375	32.9453	33.7900	34.6348	35.4795	36.3243	37.1690	38.0138	38.8585	39.7033	40.5480	42.2375	43.9270	45.6165
378	.9455	.7902	.6350	.4798	.3245	.1693	.0140	.8588	.7035	.5483	.2378	.9273	.6168
381	.9457	.7905	.6352	.4800	.3248	.1695	.0143	.8591	.7038	.5486	.2381	.9276	.6171
384	.9460	.7907	.6355	.4803	.3250	.1698	.0146	.8593	.7041	.5489	.2384	.9279	.6175
387	.9462	.7910	.6357	.4805	.3253	.1701	.0148	.8596	.7044	.5492	.2387	.9282	.6178
422390	32.9464	33.7912	34.6360	35.4808	36.3255	37.1703	38.0151	38.8599	39.7047	40.5494	42.2390	43.9286	45.6181
393	.9467	.7914	.6362	.4810	.3258	.1706	.0154	.8602	.7049	.5497	.2393	.9289	.6184
396	.9469	.7917	.6365	.4813	.3261	.1708	.0156	.8604	.7052	.5500	.2396	.9292	.6188
399	.9471	.7919	.6367	.4815	.3263	.1711	.0159	.8607	.7055	.5503	.2399	.9295	.6191
402	.9474	.7922	.6370	.4818	.3266	.1714	.0162	.8610	.7058	.5506	.2402	.9298	.6194
422405	32.9476	33.7924	34.6372	35.4820	36.3268	37.1716	38.0165	38.8613	39.7061	40.5509	42.2405	43.9301	45.6197
408	.9478	.7926	.6375	.4823	.3271	.1719	.0167	.8615	.7064	.5512	.2408	.9304	.6201
411	.9481	.7929	.6377	.4825	.3273	.1722	.0170	.8618	.7066	.5515	.2411	.9307	.6204
414	.9483	.7931	.6379	.4828	.3276	.1724	.0173	.8621	.7069	.5517	.2414	.9311	.6207
417	.9485	.7934	.6382	.4830	.3279	.1727	.0175	.8624	.7072	.5520	.2417	.9314	.6210
422420	32.9488	33.7936	34.6384	35.4833	36.3281	37.1730	38.0178	38.8626	39.7075	40.5523	42.2420	43.9317	45.6214
423	.9490	.7938	.6387	.4835	.3284	.1732	.0181	.8629	.7078	.5526	.2423	.9320	.6217
426	.9492	.7941	.6389	.4838	.3286	.1735	.0183	.8632	.7080	.5529	.2426	.9323	.6220
429	.9495	.7943	.6392	.4840	.3289	.1738	.0186	.8635	.7083	.5532	.2429	.9326	.6223
432	.9497	.7946	.6394	.4843	.3292	.1740	.0189	.8637	.7086	.5535	.2432	.9329	.6227
422435	32.9499	33.7948	34.6397	35.4845	36.3294	37.1743	38.0192	38.8640	39.7089	40.5538	42.2435	43.9332	45.6230
438	.9502	.7950	.6399	.4848	.3297	.1745	.0194	.8643	.7092	.5540	.2438	.9336	.6233
441	.9504	.7953	.6402	.4850	.3299	.1748	.0197	.8646	.7095	.5543	.2441	.9339	.6236
444	.9506	.7955	.6404	.4853	.3302	.1751	.0200	.8648	.7097	.5546	.2444	.9342	.6240
447	.9509	.7958	.6407	.4855	.3304	.1753	.0202	.8651	.7100	.5549	.2447	.9345	.6243
422450	32.9511	33.7960	34.6409	35.4858	36.3307	37.1756	38.0205	38.8654	39.7103	40.5552	42.2450	43.9348	45.6246
453	.9513	.7962	.6411	.4861	.3310	.1759	.0208	.8657	.7106	.5555	.2453	.9351	.6249
456	.9516	.7965	.6414	.4863	.3312	.1761	.0210	.8660	.7109	.5558	.2456	.9354	.6252
459	.9518	.7967	.6416	.4866	.3315	.1764	.0213	.8662	.7111	.5561	.2459	.9357	.6256
462	.9520	.7970	.6419	.4868	.3317	.1767	.0216	.8665	.7114	.5564	.2462	.9360	.6259
422465	32.9523	33.7972	34.6421	35.4871	36.3320	37.1769	38.0219	38.8668	39.7117	40.5566	42.2465	43.9364	45.6262
468	.9525	.7974	.6424	.4873	.3322	.1772	.0221	.8671	.7120	.5569	.2468	.9367	.6265
471	.9527	.7977	.6426	.4876	.3325	.1774	.0224	.8673	.7123	.5572	.2471	.9370	.6269
474	.9530	.7979	.6429	.4878	.3328	.1777	.0227	.8676	.7126	.5575	.2474	.9373	.6272
477	.9532	.7982	.6431	.4881	.3330	.1780	.0229	.8679	.7128	.5578	.2477	.9376	.6275
422480	32.9534	33.7984	34.6434	35.4883	36.3333	37.1782	38.0232	38.8682	39.7131	40.5581	42.2480	43.9379	45.6278
483	.9537	.7986	.6436	.4886	.3335	.1785	.0235	.8684	.7134	.5584	.2483	.9382	.6282
486	.9539	.7989	.6439	.4888	.3338	.1788	.0237	.8687	.7137	.5587	.2486	.9385	.6285
489	.9541	.7991	.6441	.4891	.3341	.1790	.0240	.8690	.7140	.5589	.2489	.9389	.6288
492	.9544	.7994	.6443	.4893	.3343	.1793	.0243	.8693	.7142	.5592	.2492	.9392	.6291
422495	32.9546	33.7996	34.6446	35.4896	36.3346	37.1796	38.0246	38.8695	39.7145	40.5595	42.2495	43.9395	45.6295
498	.9548	.7998	.6448	.4898	.3348	.1798	.0248	.8698	.7148	.5598	.2498	.9398	.6298
501	.9551	.8001	.6451	.4901	.3351	.1801	.0251	.8701	.7151	.5601	.2501	.9401	.6301
504	.9553	.8003	.6453	.4903	.3353	.1804	.0254	.8704	.7154	.5604	.2504	.9404	.6304
507	.9555	.8006	.6456	.4906	.3356	.1806	.0256	.8706	.7157	.5607	.2507	.9407	.6308
422510	32.9558	33.8008	34.6458	35.4908	36.3359	37.1809	38.0259	38.8709	39.7159	40.5610	42.2510	43.9410	45.6311
513	.9560	.8010	.6461	.4911	.3361	.1811	.0262	.8712	.7162	.5612	.2513	.9414	.6314
516	.9562	.8013	.6463	.4913	.3364	.1814	.0264	.8715	.7165	.5615	.2516	.9417	.6317
519	.9565	.8015	.6466	.4916	.3366	.1817	.0267	.8717	.7168	.5618	.2519	.9420	.6321
522	.9567	.8018	.6468	.4918	.3369	.1819	.0270	.8720	.7171	.5621	.2522	.9423	.6324
422525	32.9570	33.8020	34.6471	35.4921	36.3372	37.1822	38.0273	38.8723	39.7174	40.5624	42.2525	43.9426	45.6327
528	.9572	.8022	.6473	.4924	.3374	.1825	.0275	.8726	.7176	.5627	.2528	.9429	.6330
531	.9574	.8025	.6475	.4926	.3377	.1827	.0278	.8729	.7179	.5630	.2531	.9432	.6333
534	.9577	.8027	.6478	.4929	.3379	.1830	.0281	.8731	.7182	.5633	.2534	.9435	.6337
537	.9579	.8030	.6480	.4931	.3382	.1833	.0283	.8734	.7185	.5636	.2537	.9438	.6340
422540	32.9581	33.8032	34.6483	35.4934	36.3384	37.1835	38.0286	38.8737	39.7188	40.5638	42.2540	43.9442	45.6343
543	.9584	.8034	.6485	.4936	.3387	.1838	.0289	.8740	.7190	.5641	.2543	.9445	.6346
546	.9586	.8037	.6488	.4939	.3390	.1840	.0291	.8742	.7193	.5644	.2546	.9448	.6350
549	.9588	.8039	.6490	.4941	.3392	.1843	.0294	.8745	.7196	.5647	.2549	.9451	.6353
552	.9591	.8042	.6493	.4944	.3395	.1846	.0297	.8748	.7199	.5650	.2552	.9454	.6356
422555	32.9593	33.8044	34.6495	35.4946	36.3397	37.1848	38.0300	38.8751	39.7202	40.5653	42.2555	43.9457	45.6359
558	.9595	.8046	.6498	.4949	.3400	.1851	.0302	.8753	.7205	.5656	.2558	.9460	.6363
561	.9598	.8049	.6500	.4951	.3402	.1854	.0305	.8756	.7207	.5659	.2561	.9463	.6366
564	.9600	.8051	.6502	.4954	.3405	.1856	.0308	.8759	.7210	.5661	.2564	.9467	.6369
567	.9602	.8054	.6505	.4956	.3408	.1859	.0310	.8762	.7213	.5664	.2567	.9470	.6372
422570	32.9605	33.8056	34.6507	35.4959	36.3410	37.1862	38.0313	38.8764	39.7216	40.5667	42.2570	43.9473	45.6376
573	.9607	.8058	.6510	.4961	.3413	.1864	.0316	.8767	.7219	.5670	.2573	.9476	.6379
576	.9609	.8061	.6512	.4964	.3415	.1867	.0318	.8770	.7221	.5673	.2576	.9479	.6382
579	.9612	.8063	.6515	.4966	.3418	.1870	.0321	.8773	.7224	.5676	.2579	.9482	.6385
582	.9614	.8066	.6517	.4969	.3421	.1872	.0324	.8775	.7227	.5679	.2582	.9485	.6389
422585	32.9616	33.8068	34.6520	35.4971	36.3423	37.1875	38.0327	38.8778	39.7230	40.5682	42.2585	43.9488	45.6392
588	.9619	.8070	.6522	.4974	.3426	.1877	.0329	.8781	.7233	.5684	.2588	.9492	.6395
591	.9621	.8073	.6525	.4976	.3428	.1880	.0332	.8784	.7236	.5687	.2591	.9495	.6398
594	.9623	.8075	.6527	.4979	.3431	.1883	.0335	.8786	.7238	.5690	.2594	.9498	.6402
597	.9626	.8078	.6530	.4981	.3433	.1885	.0337	.8789	.7241	.5693	.2597	.9501	.6405
422600	32.9628	33.8080	34.6532	35.4984	36.3436	37.1888	38.0340	38.8792	39.7244	40.5696	42.2600	43.9504	45.6408

MEGACYCLES PER SECOND

HARMONICS

BASIC FREQ.	52	54	56	58	60	62	64	66	68	70	72	74	76
422600	21.9752	22.8204	23.6656	24.5108	25.3560	26.2012	27.0464	27.8916	28.7368	29.5820	30.4272	31.2724	32.1176
603	.9754	.8206	.6658	.5110	.3562	.2014	.0466	.8918	.7370	.5822	.4274	.2726	.1178
606	.9755	.8207	.6659	.5111	.3564	.2016	.0468	.8920	.7372	.5824	.4276	.2728	.1181
609	.9757	.8209	.6661	.5113	.3565	.2018	.0470	.8922	.7374	.5826	.4278	.2731	.1183
612	.9758	.8210	.6663	.5115	.3567	.2019	.0472	.8924	.7376	.5828	.4281	.2733	.1185
422615	21.9760	22.8212	23.6664	24.5117	25.3569	26.2021	27.0474	27.8926	28.7378	29.5831	30.4283	31.2735	32.1187
618	.9761	.8214	.6666	.5118	.3571	.2023	.0476	.8928	.7380	.5833	.4285	.2737	.1190
621	.9763	.8215	.6668	.5120	.3573	.2025	.0477	.8930	.7382	.5835	.4287	.2740	.1192
624	.9764	.8217	.6669	.5122	.3574	.2027	.0479	.8932	.7384	.5837	.4289	.2742	.1194
627	.9766	.8219	.6671	.5124	.3576	.2029	.0481	.8934	.7386	.5839	.4291	.2744	.1197
422630	21.9768	22.8220	23.6673	24.5125	25.3578	26.2031	27.0483	27.8936	28.7388	29.5841	30.4294	31.2746	32.1199
632	.9769	.8222	.6674	.5127	.3580	.2032	.0485	.8938	.7390	.5843	.4296	.2748	.1201
636	.9771	.8223	.6676	.5129	.3582	.2034	.0487	.8940	.7392	.5845	.4298	.2751	.1203
639	.9772	.8225	.6678	.5131	.3583	.2036	.0489	.8942	.7395	.5847	.4300	.2753	.1206
642	.9774	.8227	.6680	.5132	.3585	.2038	.0491	.8944	.7397	.5849	.4302	.2755	.1208
422645	21.9775	22.8228	23.6681	24.5134	25.3587	26.2040	27.0493	27.8946	28.7399	29.5852	50.4304	31.2757	32.1210
648	.9777	.8230	.6683	.5136	.3589	.2042	.0495	.8948	.7401	.5854	.4307	.2760	.1212
651	.9779	.8232	.6685	.5138	.3591	.2044	.0497	.8950	.7403	.5856	.4309	.2762	.1215
654	.9780	.8233	.6686	.5139	.3592	.2045	.0499	.8952	.7405	.5858	.4311	.2764	.1217
657	.9782	.8235	.6688	.5141	.3594	.2047	.0500	.8954	.7407	.5860	.4313	.2766	.1219
422660	21.9783	22.8236	23.6690	24.5143	25.3596	26.2049	27.0502	27.8956	28.7409	29.5862	30.4315	31.2768	32.1222
663	.9785	.8238	.6691	.5145	.3598	.2051	.0504	.8958	.7411	.5864	.4317	.2771	.1224
666	.9786	.8240	.6693	.5146	.3600	.2053	.0506	.8960	.7413	.5866	.4320	.2773	.1226
669	.9788	.8241	.6695	.5148	.3601	.2055	.0508	.8962	.7415	.5868	.4322	.2775	.1228
672	.9789	.8243	.6696	.5150	.3603	.2057	.0510	.8964	.7417	.5870	.4324	.2777	.1231
422675	21.9791	22.8245	23.6698	24.5152	25.3605	26.2059	27.0512	27.8966	28.7419	29.5873	30.4326	31.2780	32.1233
678	.9793	.8246	.6700	.5153	.3607	.2060	.0514	.8967	.7421	.5875	.4328	.2782	.1235
681	.9794	.8248	.6701	.5155	.3609	.2062	.0516	.8969	.7423	.5877	.4330	.2784	.1238
684	.9796	.8249	.6703	.5157	.3610	.2064	.0518	.8971	.7425	.5879	.4332	.2786	.1240
687	.9797	.8251	.6705	.5158	.3612	.2066	.0520	.8973	.7427	.5881	.4335	.2788	.1242
422690	21.9799	22.8253	23.6706	24.5160	25.3614	26.2068	27.0522	27.8975	28.7429	29.5883	30.4337	31.2791	32.1244
693	.9800	.8254	.6708	.5162	.3616	.2070	.0524	.8977	.7431	.5885	.4339	.2793	.1247
696	.9802	.8256	.6710	.5164	.3618	.2072	.0525	.8979	.7433	.5887	.4341	.2795	.1249
699	.9803	.8257	.6711	.5165	.3619	.2073	.0527	.8981	.7435	.5889	.4343	.2797	.1251
702	.9805	.8259	.6713	.5167	.3621	.2075	.0529	.8983	.7437	.5891	.4345	.2799	.1254
422705	21.9807	22.8261	23.6715	24.5169	25.3623	26.2077	27.0531	27.8985	28.7439	29.5894	30.4348	31.2802	32.1256
708	.9808	.8262	.6716	.5171	.3625	.2079	.0533	.8987	.7441	.5896	.4350	.2804	.1258
711	.9810	.8264	.6718	.5172	.3627	.2081	.0535	.8989	.7443	.5898	.4352	.2806	.1260
714	.9811	.8266	.6720	.5174	.3628	.2083	.0537	.8991	.7446	.5900	.4354	.2808	.1263
717	.9813	.8267	.6722	.5176	.3630	.2085	.0539	.8993	.7448	.5902	.4356	.2811	.1265
422720	21.9814	22.8269	23.6723	24.5178	25.3632	26.2086	27.0541	27.8995	28.7450	29.5904	30.4358	31.2813	32.1267
723	.9816	.8270	.6725	.5179	.3634	.2088	.0543	.8997	.7452	.5906	.4361	.2815	.1269
726	.9818	.8272	.6727	.5181	.3636	.2090	.0545	.8999	.7454	.5908	.4363	.2817	.1272
729	.9819	.8274	.6728	.5183	.3637	.2092	.0547	.9001	.7456	.5910	.4365	.2819	.1274
732	.9821	.8275	.6730	.5185	.3639	.2094	.0548	.9003	.7458	.5912	.4367	.2822	.1276
422735	21.9822	22.8277	23.6732	24.5186	25.3641	26.2096	27.0550	27.9005	28.7460	29.5915	30.4369	31.2824	32.1279
738	.9824	.8279	.6733	.5188	.3643	.2098	.0552	.9007	.7462	.5917	.4371	.2826	.1281
741	.9825	.8280	.6735	.5190	.3645	.2099	.0554	.9009	.7464	.5919	.4374	.2828	.1283
744	.9827	.8282	.6737	.5192	.3646	.2101	.0556	.9011	.7466	.5921	.4376	.2831	.1285
747	.9828	.8283	.6738	.5193	.3648	.2103	.0558	.9013	.7468	.5923	.4378	.2833	.1288
422750	21.9830	22.8285	23.6740	24.5195	25.3650	26.2105	27.0560	27.9015	28.7470	29.5925	30.4380	31.2835	32.1290
753	.9832	.8287	.6742	.5197	.3652	.2107	.0562	.9017	.7472	.5927	.4382	.2837	.1292
756	.9833	.8288	.6743	.5198	.3654	.2109	.0564	.9019	.7474	.5929	.4384	.2839	.1295
759	.9835	.8290	.6745	.5200	.3655	.2111	.0566	.9021	.7476	,5931	.4386	.2842	.1297
762	.9836	.8291	.6747	.5202	.3657	.2112	.0568	.9023	.7478	.5933	.4389	.2844	.1299
422765	21.9838	22.8293	23.6748	24.5204	25.3659	26.2114	27.0570	27.9025	28.7480	29.5936	30.4391	31.2846	32.1301
768	.9839	.8295	.6750	.5205	.3661	.2116	.0572	.9027	.7482	.5938	.4393	.2848	.1304
771	.9841	.8296	.6752	.5207	.3663	.2118	.0573	.9029	.7484	.5940	.4395	.2851	.1306
774	.9842	.8298	.6753	.5209	.3664	.2120	.0575	.9031	.7486	.5942	.4397	.2853	.1308
777	.9844	.8300	.6755	.5211	.3666	.2122	.0577	.9033	.7488	.5944	.4399	.2855	.1311
422780	21.9846	22.8301	23.6757	24.5212	25.3668	26.2124	27.0579	27.9035	28.7490	29.5946	30.4402	31.2857	32.1313
783	.9847	.8303	.6758	.5214	.3670	.2125	.0581	.9037	.7492	.5948	.4404	.2859	.1315
786	.9849	.8304	.6760	.5216	.3672	.2127	.0583	.9039	.7494	.5950	.4406	.2862	.1317
789	.9850	.8306	.6762	.5218	.3673	.2129	.0585	.9041	.7497	.5952	.4408	.2864	.1320
792	.9852	.8308	.6764	.5219	.3675	.2131	.0587	.9043	.7499	.5954	.4410	.2866	.1322
422795	21.9853	22.8309	23.6765	24.5221	25.3677	26.2133	27.0589	27.9045	28.7501	29.5957	30.4412	31.2868	32.1324
798	.9855	.8311	.6767	.5223	.3679	.2135	.0591	.9047	.7503	.5959	.4415	.2871	.1326
801	.9857	.8313	.6769	.5225	.3681	.2137	.0593	.9049	.7505	.5961	.4417	.2873	.1329
804	.9858	.8314	.6770	.5226	.3682	.2138	.0595	.9051	.7507	.5963	.4419	.2875	.1331
807	.9860	.8316	.6772	.5228	.3684	.2140	.0596	.9053	.7509	.6965	.4421	.2877	.1333
422810	21.9861	22.8317	23.6774	24.5230	25.3686	26.2142	27.0598	27.9055	28.7511	29.5967	30.4423	31.2879	32.1336
813	.9863	.8319	.6775	.5232	.3688	.2144	.0600	.9057	.7513	.5969	.4425	.2882	.1338
816	.9864	.8321	.6777	.5233	.3690	.2146	.0602	.9059	.7515	.5971	.4428	.2884	.1340
819	.9866	.8322	.6779	.5235	.3691	.2148	.0604	.9061	.7517	.5973	.4430	.2886	.1342
822	.9867	.8324	.6780	.5237	.3693	.2150	.0606	.9063	.7519	.5975	.4432	.2888	.1345
422825	21.9869	22.8326	23.6782	24.5239	25.3695	26.2152	27.0608	27.9065	28.7521	29.5978	30.4434	31.2891	32.1347
828	.9871	.8327	.6784	.5240	.3697	.2153	.0610	.9066	.7523	.5980	.4436	.2893	.1349
831	.9872	.8329	.6785	.5242	.3699	.2155	.0612	.9068	.7525	.5982	.4438	.2895	.1352
834	.9874	.8330	.6787	.5244	.3700	.2157	.0614	.9070	.7527	.5984	.4440	.2897	.1354
837	.9875	.8332	.6789	.5245	.3702	.2159	.0616	.9072	.7529	.5986	.4443	.2899	.1356
422840	21.9877	22.8334	23.6790	24.5247	25.3704	26.2161	27.0618	17.9074	28.7531	29.5988	30.4445	31.2902	32.1358
843	.9878	.8335	.6792	.5249	.3706	.2163	.0620	.9076	.7533	.5990	.4447	.2904	.1361
846	.9880	.8337	.6794	.5251	.3708	.2165	.0621	.9078	.7535	.5992	.4449	.2906	.1363
849	.9881	.8338	.6795	.5252	.3709	.2166	.0623	.9080	.7537	.5994	.4451	.2908	.1365
852	.9883	.8340	.6797	.5254	.3711	.2168	.0625	.9082	.7539	.5996	.4453	.2910	.1368
422855	21.9885	22.8342	23.6799	24.5256	25.3713	26.2170	27.0627	27.9084	28.7541	29.5999	30.4456	31.2913	32.1370
858	.9886	.8343	.6800	.5258	.3715	.2172	.0629	.9086	.7543	.6001	.4458	.2915	.1372
861	.9888	.8345	.6802	.5259	.3717	.2174	.0631	.9088	.7545	.6003	.4460	.2917	.1374
864	.9889	.8347	.6804	.5261	.3718	.2176	.0633	.9090	.7548	.6005	.4462	.2919	.1377
867	.9891	.8348	.6806	.5263	.3720	.2178	.0635	.9092	.7550	.6007	.4464	.2922	.1379
422870	21.9892	22.8350	23.6807	24.5265	25.3722	26.2179	27.0637	27.9094	28.7552	29.6009	30.4466	31.2924	32.1381
873	.9894	.8351	.6809	.5266	.3724	.2181	.0639	.9096	.7554	.6011	.4469	.2926	.1383
876	.9896	.8353	.6811	.5268	.3726	.2183	.0641	.9098	.7556	.6013	.4471	.2928	.1386
879	.9897	.8355	.6812	.5270	.3727	.2185	.0643	.9100	.7558	.6015	.4473	.2930	.1388
882	.9899	.8356	.6814	.5272	.3729	.2187	.0644	.9102	.7560	.6017	.4475	.2933	.1390
422885	21.9900	22.8358	23.6816	24.5273	25.3731	25.2189	27.0646	27.9104	28.7562	29.6020	30.4477	31.2935	32.1393
888	.9902	.8360	.6817	.5275	.3733	.2191	.0648	.9106	.7564	.6022	.4479	.2937	.1395
891	.9903	.8361	.6819	.5277	.3735	.2192	.0650	.9108	.7566	.6024	.4482	.2939	.1397
894	.9905	.8363	.6821	.5279	.3736	.2194	.0652	.9110	.7568	.6026	.4484	.2942	.1399
897	.9906	.8364	.6822	.5280	.3738	.2196	.0654	.9112	.7570	.6028	.4486	.2944	.1402
422900	21.9908	22.8366	23.6824	24.5282	25.3740	26.2198	27.0656	27.9114	28.7572	29.6030	30.4488	31.2946	32.1404

MEGACYCLES PER SECOND

HARMONICS

BASIC FREQ.	78	80	82	84	86	88	90	92	94	96	100	104	108
422600	32.9628	33.8080	34.6532	35.4984	36.3436	37.1888	38.0340	38.8792	39.7244	40.5696	42.2600	43.9504	45.6408
603	.9630	.8082	.6534	.4987	.3439	.1891	.0343	.8795	.7247	.5699	.2603	.9507	.6411
606	.9633	.8085	.6537	.4989	.3441	.1893	.0345	.8798	.7250	.5702	.2606	.9510	.6414
609	.9635	.8087	.6439	.4992	.3444	.1896	.0348	.8800	.7252	.5705	.2609	.9513	.6418
612	.9637	.8090	.6542	.4994	.3446	.1899	.0351	.8803	.7255	.5708	.2612	.9516	.6421
422615	32.9640	33.8092	34.6544	35.4997	36.3449	37.1901	38.0354	38.8806	39.7258	40.5710	42.2615	43.9520	45.6424
618	.9642	.8094	.6547	.4999	.3451	.1904	.0356	.8809	.7261	.5713	.2618	.9523	.6427
621	.9644	.8097	.6549	.5002	.3454	.1906	.0359	.8811	.7264	.5716	.2621	.9526	.6431
624	.9647	.8099	.6552	.5004	.3457	.1909	.0362	.8814	.7267	.5719	.2624	.9529	.6434
627	.9649	.8102	.6554	.5007	.3459	.1912	.0364	.8817	.7269	.5722	.2627	.9532	.6437
422630	32.9651	33.8104	34.6557	35.5009	36.3462	37.1914	38.0367	38.8820	39.7272	40.5725	42.2630	43.9535	45.6440
633	.9654	.8106	.6559	.5012	.3464	.1917	.0370	.8822	.7275	.5728	.2633	.9538	.6444
636	.9656	.8109	.6562	.5014	.3467	.1920	.0372	.8825	.7278	.5731	.2636	.9541	.6447
639	.9658	.8111	.6564	.5017	.3470	.1922	.0375	.8828	.7281	.5733	.2639	.9545	.6450
642	.9661	.8114	.6566	.5019	.3472	.1925	.0378	.8831	.7283	.5736	.2642	.9548	.6453
422645	32.9663	33.8116	34.6569	35.5022	36.3475	37.1928	38.0381	38.8833	39.7286	40.5739	42.2645	43.9551	45.6457
648	.9665	.8118	.6571	.5024	.3477	.1930	.0383	.8836	.7289	.5742	.2648	.9554	.6460
651	.9668	.8121	.6574	.5027	.3480	.1933	.0386	.8839	.7292	.5745	.2651	.9557	.6463
654	.9670	.8123	.6576	.5029	.3482	.1936	.0389	.8842	.7295	.5748	.2654	.9560	.6466
657	.9672	.8126	.6579	.5032	.3485	.1938	.0391	.8844	.7298	.5751	.2657	.9563	.6470
422660	32.9675	33.8128	34.6581	35.5034	36.3488	37.1941	38.0394	38.8847	39.7300	40.5754	42.2660	43.9566	45.6473
663	.9677	.8130	.6584	.5037	.3490	.1943	.0397	.8850	.7303	.5756	.2663	.9570	.6476
666	.9679	.8133	.6586	.5039	.3493	.1946	.0399	.8853	.7306	.5759	.2666	.9573	.6479
669	.9682	.8135	.6589	.5042	.3495	.1949	.0402	.8855	.7309	.5762	.2669	.9576	.6483
672	.9684	.8138	.6591	.5044	.3498	.1951	.0405	.8858	.7312	.5765	.2672	.9579	.6486
422675	32.9687	33.8140	34.6594	35.5047	36.3501	37.1954	38.0408	38.8861	39.7315	40.5768	42.2675	43.9582	45.6489
678	.9689	.8142	.6596	.5050	.3503	.1957	.0410	.8864	.7317	.5771	.2678	.9585	.6492
681	.9691	.8145	.6598	.5052	.3506	.1959	.0413	.8867	.7320	.5774	.2681	.9588	.6495
684	.9694	.8147	.6601	.5055	.3508	.1962	.0416	.8869	.7323	.5777	.2684	.9591	.6499
687	.9696	.8150	.6603	.5057	.3511	.1965	.0418	.8872	.7326	.5780	.2687	.9594	.6502
422690	32.9698	33.8152	34.6606	35.5060	36.3513	37.1967	38.0421	38.8875	39.7329	40.5782	42.2690	43.9598	45.6505
693	.9701	.8154	.6608	.5062	.3516	.1970	.0424	.8878	.7331	.5785	.2693	.9601	.6508
696	.9703	.8157	.6611	.5065	.3519	.1972	.0426	.8880	.7334	.5788	.2696	.9604	.6512
699	.9705	.8159	.6613	.5067	.3521	.1975	.0429	.8883	.7337	.5791	.2699	.9607	.6515
702	.9708	.8162	.6616	.5070	.3524	.1978	.0432	.8886	.7340	.5794	.2702	.9610	.6518
422705	32.9710	33.8164	34.6618	35.5072	36.3526	37.1980	38.0435	38.8889	39.7343	40.5797	42.2705	43.9613	45.6521
708	.9712	.8166	.6621	.5075	.3529	.1983	.0437	.8891	.7346	.5800	.2708	.9616	.6525
711	.9715	.8169	.6623	.5077	.3531	.1986	.0440	.8894	.7348	.5803	.2711	.9619	.6528
714	.9717	.8171	.6625	.5080	.3534	.1988	.0443	.8897	.7351	.5805	.2714	.9623	.6531
717	.9719	.8174	.6628	.5082	.3537	.1991	.0445	.8900	.7354	.5808	.3717	.9626	.6534
422720	32.9722	33.8176	34.6630	35.5085	36.3539	37.1994	38.0448	38.8902	39.7357	40.5811	42.2720	43.9629	45.6538
723	.9724	.8178	.6633	.5087	.3542	.1996	.0451	.8905	.7360	.5814	.2723	.9632	.6541
726	.9726	.8181	.6635	.5090	.3544	.1999	.0453	.8908	.7362	.5817	.2726	.9635	.6544
729	.9729	.8183	.6638	.5092	.3547	.2002	.0456	.8911	.7365	.5820	.2729	.9638	.6547
732	.9731	.8186	.6640	.5095	.3550	.2004	.0459	.8913	.7368	.5823	.2732	.9641	.6551
422735	32.9733	33.8188	34.6643	35.5097	36.3552	37.2007	38.0462	38.8916	39.7371	40.5826	42.2735	43.9644	45.6554
738	.9736	.8190	.6645	.5100	.3555	.2009	.0464	.8919	.7374	.5828	.2738	.9648	.6557
741	.9738	.8193	.6648	.5102	.3557	.2012	.0467	.8922	.7377	.5831	.2741	.9651	.6560
744	.9740	.8195	.6650	.5105	.3560	.2015	.0470	.8924	.7379	.5834	.2744	.9654	.6564
747	.9743	.8198	.6653	.5107	.3562	.2017	.0472	.8927	.7382	.5837	.2747	.9657	.6567
422750	32.9745	33.8200	34.6655	35.5110	36.3565	37.2020	38.0475	38.8930	39.7385	40.5840	42.2750	43.9660	45.6570
753	.9747	.8202	.6657	.5113	.3568	.2023	.0478	.8933	.7388	.5843	.2753	.9663	.6573
756	.9750	.8205	.6660	.5115	.3570	.2025	.0480	.8936	.7391	.5846	.2756	.9666	.6576
759	.9752	.8207	.6662	.5118	.3573	.2028	.0483	.8938	.7393	.5849	.2759	.9669	.6580
762	.9754	.8210	.6665	.5120	.3575	.2031	.0486	.8941	.7396	.5852	.2762	.9672	.6583
422765	32.9757	33.8212	34.6667	35.5123	36.3578	37.2033	38.0489	38.8944	39.7399	40.5854	42.2765	43.9676	45.6586
768	.9759	.8214	.6670	.5125	.3580	.2036	.0491	.8947	.7402	.5857	.2768	.9679	.6589
771	.9761	.8217	.6672	.5128	.3583	.2038	.0494	.8949	.7405	.5860	.2771	.9682	.6593
774	.9764	.8219	.6675	.5130	.3586	.2041	.0497	.8952	.7408	.5863	.2774	.9685	.6596
777	.9766	.8222	.6677	.5133	.3588	.2044	.0499	.8955	.7410	.5866	.2777	.9688	.6599
422780	32.9768	33.8224	34.6680	35.5135	36.3591	37.2046	38.0502	38.8958	39.7413	40.5869	42.4780	43.9691	45.6602
783	.9771	.8226	.6682	.5138	.3593	.2049	.0505	.8960	.7416	.5872	.2783	.9694	.6606
786	.9773	.8229	.6685	.5140	.3596	.2052	.0507	.8963	.7419	.5875	.2786	.9697	.6609
789	.9775	.8231	.6687	.5143	.3599	.2054	.0510	.8966	.7422	.5877	.2789	.9701	.6612
792	.9778	.8234	.6689	.5145	.3601	.2057	.0513	.8969	.7424	.5880	.2792	.9704	.6615
422795	32.9780	33.8236	34.6692	35.5148	36.3604	37.2060	38.0516	38.8971	39.7427	40.5883	42.4795	43.9707	45.6619
798	.9782	.8238	.6694	.5150	.3606	.2062	.0518	.8974	.7430	.5886	.2798	.9710	.6622
801	.9785	.8241	.6697	.5153	.3609	.2065	.0521	.8977	.7433	.5889	.2801	.9713	.6625
804	.9787	.8243	.6699	.5155	.3611	.2068	.0524	.8980	.7436	.5892	.2804	.9716	.6628
807	.9789	.8246	.6702	.5158	.3614	.2070	.0526	.8982	.7439	.5895	.2807	.9719	.6632
422810	32.9792	33.8248	34.6704	35.5160	36.3617	37.2073	38.0529	38.8985	39:7441	40.5898	42.2810	43.9722	45.6635
813	.9794	.8250	.6707	.5163	.3619	.2075	.0532	.8988	.7444	.5900	.2813	.9726	.6638
816	.9796	.8253	.6709	.5165	.3622	.2078	.0534	.8991	.7447	.5903	.2816	.9729	.6641
819	.9799	.8255	.6712	.5168	.3624	.2081	.0537	.8993	.7450	.5906	.2819	.9732	.6645
822	.9801	.8258	.6714	.5170	.3627	.2083	.0540	.8996	.7453	.5909	.2822	.9735	.6648
422825	32.9804	33.8260	34.6717	35.5173	36.3630	37.2086	38.0543	38.8999	39.7456	40.5912	42.2825	43.9738	45.6651
828	.9806	.8262	.6719	.5176	.3632	.2089	.0545	.9002	.7458	.5915	.2828	.9741	.6654
831	.9808	.8265	.6721	.5178	.3635	.2091	.0548	.9005	.7461	.5918	.2831	.9744	.6657
834	.9811	.8267	.6724	.5181	.3637	.2094	.0551	.9007	.7464	.5921	.2834	.9747	.6661
837	.9813	.8270	.6726	.5183	.3640	.2097	.0553	.9010	.7467	.5924	.2837	.9750	.6664
422840	32.9815	33.8272	34.6729	35.5186	36.3642	37.2099	38.0556	38.9013	39.7470	40.5926	42.2840	43.9754	45.6667
843	.9818	.8274	.6731	.5188	.3645	.2102	.0559	.9016	.7472	.5929	.2843	.9757	.6670
846	.9820	.8277	.6734	.5191	.3648	.2104	.0561	.9018	.7475	.5932	.2846	.9760	.6674
849	.9822	.8279	.6736	.5193	.3650	.2107	.0564	.9021	.7478	.5935	.2849	.9763	.6677
852	.9825	.8282	.6739	.5196	.3653	.2110	.0567	.9024	.7481	.5938	.2852	.9766	.6680
422855	32.9827	33.8284	34.6741	35.5198	36.3655	37.2112	38.0570	38.9027	39.7484	40.5941	42.4855	43.9769	45.6683
858	.9829	.8286	.5644	.5201	.3658	.2115	.0572	.9029	.7487	.5944	.2858	.9772	.6687
861	.9832	.8289	.6746	.5203	.3660	.2118	.0575	.9032	.7489	.5947	.2861	.9775	.6690
864	.9834	.8291	.6748	.5206	.3663	.2120	.0578	.9035	.7492	.5949	.2864	.9779	.6693
867	.9836	.8294	.6751	.5208	.3666	.2123	.0580	.9038	.7495	.5952	.2867	.9782	.6696
422870	32.9839	33.8296	34.6753	35.5211	36.3668	37.2126	38.0583	38.9040	39.7498	40.5955	42.4870	43.9785	45.6700
873	.9841	.8298	.6756	.5213	.3671	.2128	.0586	.9043	.7501	.5958	.2873	.9788	.6703
876	.9843	.8301	.6758	.5216	.3673	.2131	.0588	.9046	.7503	.5961	.2876	.9791	.6706
879	.9846	.8303	.6761	.5218	.3676	.2134	.0591	.9049	.7506	.5964	.2879	.9794	.6709
882	.9848	.8306	.6763	.5221	.3679	.2136	.0594	.9051	.7509	.5967	.2882	.9797	.6713
422885	32.9850	33.8308	34.6766	35.5223	36.3681	37.2139	38.0597	38.9054	39.7512	40.5970	42.2885	43.9800	45.6716
888	.9853	.8310	.6768	.5226	.3684	.2141	.0599	.9057	.7515	.5972	.2888	.9804	.6719
891	.9855	.8313	.6771	.5228	.3686	.2144	.0602	.9060	.7518	.5975	.2891	.9807	.6722
894	.9857	.8315	.6773	.5231	.3689	.2147	.0605	.9062	.7520	.5978	.2894	.9810	.6726
897	.9860	.8318	.6776	.5233	.3691	.2149	.0607	.9065	.7523	.5981	.2897	.9813	.6729
422900	32.9862	33.8320	34.6778	35.5236	36.3694	37.2152	38.0610	38.9068	39.7526	40.5984	42.2900	43.9816	45.6732

MEGACYCLES PER SECOND

R

H A R M O N I C S

BASIC FREQ.	52	54	56	58	60	62	64	66	68	70	72	74	76
422900	21.9908	22.8366	23.6824	24.5282	25.3740	26.2198	27.0656	27.9114	28.7572	29.6030	30.4488	31.2946	32.1404
903	.9910	.8368	.6826	.5284	.3742	.2200	.0658	.9116	.7574	.6032	.4490	.2948	.1406
906	.9911	.8369	.6827	.5285	.3744	.2202	.0660	.9118	.7576	.6034	.4492	.2950	.1409
909	.9913	.8371	.6829	.5287	.3745	.2204	.0662	.9120	.7578	.6036	.4494	.2953	.1411
912	.9914	.8372	.6831	.5289	.3747	.2205	.0664	.9122	.7580	.6038	.4497	.2955	.1413
422915	21.9916	22.8374	23.6832	24.5291	25.3749	26.2207	27.0666	27.9124	28.7582	29.6041	30.4499	31.2957	32.1415
918	.9917	.8376	.6834	.5292	.3751	.2209	.0668	.9126	.7584	.6043	.4501	.2959	.1418
921	.9919	.8377	.6836	.5294	.3753	.2211	.0669	.9128	.7586	.6045	.4503	.2962	.1420
924	.9920	.8379	.6837	.5296	.3754	.2213	.0671	.9130	.7588	.6047	.4505	.2964	.1422
927	.9922	.8381	.6839	.5298	.3756	.2215	.0673	.9132	.7590	.6049	.4507	.2966	.1425
422930	21.9924	22.8382	23.6841	24.5299	25.3758	26.2217	27.0675	27.9134	28.7592	29.6051	30.4510	31.2968	32.1427
933	.9925	.8384	.6842	.5301	.3760	.2218	.0677	.9136	.7594	.6053	.4512	.2970	.1429
936	.9927	.8385	.6844	.5303	.3762	.2220	.0679	.9138	.7596	.6055	.4514	.2973	.1431
939	.9928	.8387	.6846	.5305	.3763	.2222	.0681	.9140	.7599	.6057	.4516	.2975	.1434
942	.9930	.8389	.6848	.5306	.3765	.2224	.0683	.9142	.7601	.6059	.4518	.2977	.1436
422945	21.9931	22.8390	23.6849	24.5308	25.3767	26.2226	27.0685	27.9144	28.7603	29.6062	30.4520	31.2979	32.1438
948	.9933	.8392	.6851	.5310	.3769	.2228	.0687	.9146	.7605	.6064	.4523	.2982	.1440
951	.9935	.8394	.6853	.5312	.3771	.2230	.0689	.9148	.7607	.6066	.4525	.2984	.1443
954	.9936	.8395	.6854	.5313	.3772	.2231	.0691	.9150	.7609	.6068	.4527	.2986	.1445
957	.9938	.8397	.6856	.5315	.3774	.2233	.0692	.9152	.7611	.6070	.4529	.2988	.1447
422960	21.9939	22.8398	23.6858	24.5317	25.3776	26.2235	27.0694	27.9154	28.7613	29.6072	30.4531	31.2990	32.1450
963	.9941	.8400	.6859	.5319	.3778	.2237	.0696	.9156	.7615	.6074	.4533	.2993	.1452
966	.9942	.8402	.6861	.5320	.3780	.2239	.0698	.9158	.7617	.6076	.4536	.2995	.1454
969	.9944	.8403	.6863	.5322	.3781	.2241	.0700	.9160	.7619	.6078	.4538	.2997	.1456
972	.9945	.8405	.6864	.5324	.3783	.2243	.0702	.9162	.7621	.6080	.4540	.2999	.1459
422975	21.9947	22.8407	23.6866	24.5326	25.3785	26.2245	27.0704	27.9164	28.7623	29.6083	30.4542	31.3002	32.1461
978	.9949	.8408	.6868	.5327	.3787	.2246	.0706	.9165	.7625	.6085	.4544	.3004	.1463
981	.9950	.8410	.6869	.5329	.3789	.2248	.0708	.9167	.7627	.6087	.4546	.3006	.1466
984	.9952	.8411	.6871	.5331	.3790	.2250	.0710	.9169	.7629	.6089	.4548	.3008	.1468
987	.9953	.8413	.6873	.5332	.3792	.2252	.0712	.9171	.7631	.6091	.4551	.3010	.1470
422990	21.9955	22.8415	23.6874	24.5334	25.3794	26.2254	27.0714	27.9173	28.7633	29.6093	30.4553	31.3013	32.1472
993	.9956	.8416	.6876	.5336	.3796	.2256	.0716	.9175	.7635	.6095	.4555	.3015	.1475
996	.9958	.8418	.6878	.5338	.3798	.2258	.0717	.9177	.7637	.6097	.4557	.3017	.1477
999	.9959	.8419	.6879	.5339	.3799	.2259	.0719	.9179	.7639	.6099	.4559	.3019	.1479
423002	.9961	.8421	.6881	.5341	.3801	.2261	.0721	.9181	.7641	.6101	.4561	.3021	.1482
423005	21.9963	22.8423	23.6883	24.5343	25.3803	26.2263	27.0723	27.9183	28.7643	29.6104	30.4564	31.3024	32.1484
008	.9964	.8424	.6884	.5345	.3805	.2265	.0725	.9185	.7645	.6106	.4566	.3026	.1486
011	.9966	.8426	.6886	.5346	.3807	.2267	.0727	.9187	.7647	.6108	.4568	.3028	.1488
014	.9967	.8428	.6888	.5348	.3808	.2269	.0729	.9189	.7650	.6110	.4570	.3030	.1491
017	.9969	.8429	.6890	.5350	.3810	.2271	.0731	.9191	.7652	.6112	.4572	.3033	.1493
423020	21.9970	22.8431	23.6891	24.5352	25.3812	26.2272	27.0733	27.9193	28.7654	29.6114	30.4574	31.3035	32.1495
023	.9972	.8432	.6893	.5353	.3814	.2274	.0735	.9195	.7656	.6116	.4577	.3037	.1497
026	.9974	.8434	.6895	.5355	.3816	.2276	.0737	.9197	.7658	.6118	.4579	.3039	.1500
029	.9975	.8436	.6896	.5357	.3817	.2278	.0739	.9199	.7660	.6120	.4581	.3041	.1502
032	.9977	.8437	.6898	.5359	.3819	.2280	.0740	.9201	.7662	.6122	.4583	.3044	.1504
423035	21.9978	22.8439	23.6900	24.5360	25.3821	26.2282	27.0742	27.9203	28.7664	29.6125	30.4585	31.3046	32.1507
038	.9980	.8441	.6901	.5362	.3823	.2284	.0744	.9205	.7666	.6127	.4587	.3048	.1509
041	.9981	.8442	.6903	.5364	.3825	.2285	.0746	.9207	.7668	.6129	.4590	.3050	.1511
044	.9983	.8444	.6905	.5366	.3826	.2287	.0748	.9209	.7670	.6131	.4592	.3053	.1513
047	.9984	.8445	.6906	.5367	.3828	.2289	.0750	.9211	.7672	.6133	.4594	.3055	.1516
423050	21.9986	22.8447	23.6908	24.5369	25.3830	26.2291	27.0752	27.9213	28.7674	29.6135	30.4596	31.3057	32.1518
053	.9988	.8449	.6910	.5371	.3832	.2293	.0754	.9215	.7676	.6137	.4598	.3059	.1520
056	.9989	.8450	.6911	.5372	.3834	.2295	.0756	.9217	.7678	.6139	.4600	.3061	.1523
059	.9991	.8452	.6913	.5374	.3835	.2297	.0758	.9219	.7680	.6141	.4602	.3064	.1525
062	.9992	.8453	.6915	.5376	.3837	.2298	.0760	.9221	.7682	.6143	.4605	.3066	.1527
423065	21.9994	22.8455	23.6916	24.5378	25.3839	26.2300	27.0762	27.9223	28.7684	29.6146	30.4607	31.3068	32.1529
068	.9995	.8457	.6918	.5379	.3841	.2302	.0764	.9225	.7686	.6148	.4609	.3070	.1532
071	.9997	.8458	.6920	.5381	.3843	.2304	.0765	.9227	.7688	.6150	.4611	.3073	.1534
074	.9998	.8460	.6921	.5383	.3844	.2306	.0767	.9229	.7690	.6152	.4613	.3075	.1536
077	22.0000	.8462	.6923	.5385	.3846	.2308	.0769	.9231	.7692	.6154	.4615	.3077	.1539
423080	22.0002	22.8463	23.6925	24.5386	25.3848	26.2310	27.0771	27.9233	28.7694	29.6156	30.4618	31.3079	32.1541
083	.0003	.8465	.6926	.5388	.3850	.2311	.0773	.9235	.7696	.6158	.4620	.3081	.1543
086	.0005	.8466	.6928	.5390	.3852	.2313	.0775	.9237	.7698	.6160	.4622	.3084	.1545
089	.0006	.8468	.6930	.5392	.3853	.2315	.0777	.9239	.7701	.6162	.4624	.3086	.1548
092	.0008	.8470	.6932	.5393	.3855	.2317	.0779	.9241	.7703	.6164	4626	.3088	.1550
423095	22.0009	22.8471	23.6933	24.5395	25.3857	26.2319	27.0781	27.9243	28.7705	29.6167	30.4628	31.3090	32.1552
098	.0011	.8473	.6935	.5397	.3859	.2321	.0783	.9245	.7707	.6169	.4631	.3093	.1554
101	.0013	.8475	.6937	.5399	.3861	.2323	.0785	.9247	.7709	.6171	.4633	.3095	.1557
104	.0014	.8476	.6938	.5400	.3862	.2324	.0787	.9249	.7711	.6173	.4635	.3097	.1559
107	.0016	.8478	.6940	.5402	.3864	.2326	.0788	.9251	.7713	.6175	.4637	.3099	.1561
423110	22.0017	22.8479	23.6942	24.5404	25.3866	26.2328	27.0790	27.9253	28.7715	29.6177	30.4639	31.3101	32.1564
113	.0019	.8481	.6943	.5406	.3868	.2330	.0792	.9255	.7717	.6179	.4641	.3104	.1566
116	.0020	.8483	.6945	.5407	.3870	.2332	.0794	.9257	.7719	.6181	.4644	.3106	.1568
119	.0022	.8484	.6947	.5409	.3871	.2334	.0796	.9259	.7721	.6183	.4646	.3108	.1570
122	.0023	.8486	.6948	.5411	.3873	.2336	.0798	.9261	.7723	.6185	.4648	.3110	.1573
423125	22.0025	22.8488	23.6950	24.5413	25.3875	26.2338	27.0800	27.9263	28.7725	29.6188	30.4650	31.3113	32.1575
128	.0027	.8489	.6952	.5414	.3877	.2339	.0802	.9264	.7727	.6190	.4652	.3115	.1577
131	.0028	.8491	.6953	.5416	.3879	.2341	.0804	.9266	.7729	.6192	.4654	.3117	.1580
134	.0030	.8492	.6955	.5418	.3880	.2343	.0806	.9268	.7731	.6194	.4656	.3119	.1582
137	.0031	.8494	.6957	.5419	.3882	.2345	.0808	.9270	.7733	.6196	.4659	.3121	.1584
423140	22.0033	22.8496	23.6958	24.5421	25.3884	26.2347	27.0810	27.9272	28.7735	29.6198	30.4661	31.3124	32.1586
143	.0034	.8497	.6960	.5423	.3886	.2349	.0812	.9274	.7737	.6200	.4663	.3126	.1589
146	.0036	.8499	.6962	.5425	.3888	.2351	.0813	.9276	.7739	.6202	.4665	.3128	.1591
149	.0037	.8500	.6963	.5426	.3889	.2352	.0815	.9278	.7741	.6204	.4667	.3130	.1593
152	.0039	.8502	.6965	.5428	.3891	.2354	.0817	.9280	.7743	.6206	.4669	.3132	.1596
423155	22.0041	22.8504	23.6967	24.5430	25.3893	26.2356	27.0819	27.9282	28.7745	29.6209	30.4672	31.3135	32.1598
158	.0042	.8505	.6968	.5432	.3895	.2358	.0821	.9284	.7747	.6211	.4674	.3137	.1600
161	.0044	.8507	.6970	.5433	.3897	.2360	.0823	.9286	.7749	.6213	.4676	.3139	.1602
164	.0045	.8509	.6972	.5435	.3898	.2362	.0825	.9288	.7752	.6215	.4678	.3141	.1605
167	.0047	.8510	.6974	.5437	.3900	.2364	.0827	.9290	.7754	.6217	.4680	.3144	.1607
423170	22.0048	22.8512	23.6975	24.5439	25.3902	26.2365	27.0829	27.9292	28.7756	29.6219	30.4682	31.3146	32.1609
173	.0050	.8513	.6977	.5440	.3904	.2367	.0831	.9294	.7758	.6221	.4685	.3148	.1611
176	.0052	.8515	.6979	.5442	.3906	.2369	.0833	.9296	.7760	.6223	.4687	.3150	.1614
179	.0053	.8517	.6980	.5444	.3907	.2371	.0835	.9298	.7762	.6225	.4689	.3152	.1616
182	.0055	.8518	.6982	.5446	.3909	.2373	.0836	.9300	.7764	.6227	.4691	.3155	.1618
423185	22.0056	22.8520	23.6984	24.5447	25.3911	26.2375	27.0838	27.9302	28.7766	29.6230	30.4693	31.3157	32.1621
188	.0058	.8522	.6985	.5449	.3913	.2377	.0840	.9304	.7768	.6232	.4695	.3159	.1623
191	.0059	.8523	.6987	.5451	.3915	.2378	.0842	.9306	.7770	.6234	.4698	.3161	.1625
194	.0061	.8525	.6989	.5453	.3916	.2380	.0844	.9308	.7772	.6236	.4700	.3164	.1627
197	.0062	.8526	.6990	.5454	.3918	.2382	.0846	.9310	.7774	.6238	.4702	.3166	.1630
423200	22.0064	22.8528	23.6992	24.5456	25.3920	26.2384	27.0848	27.9312	28.7776	29.6240	30.4704	31.3168	32.1632

MEGACYCLES PER SECOND

BASIC FREQ.	HARMONICS 78	80	82	84	86	88	90	92	94	96	100	104	108
422900	32.9862	33.8320	34.6778	35.5236	36.3694	37.2152	38.0610	38.9068	39.7526	40.5984	42.2900	43.9816	45.6732
903	.9864	.8322	.6780	.5239	.3697	.2155	.0613	.9071	.7529	.5987	.2903	.9819	.6735
906	.9867	.8325	.6783	.5241	.3699	.2157	.0615	.9074	.7532	.5990	.2906	.9822	.6738
909	.9869	.8327	.6785	.5244	.3702	.2160	.0618	.9076	.7534	.5993	.2909	.9825	.6742
912	.9871	.8330	.6788	.5246	.3704	.2163	.0621	.9079	.7537	.5996	.2912	.9828	.6745
422915	32.9874	33.8332	34.6790	35.5249	36.3707	37.2165	38.0624	38.9082	39.7540	40.5998	42.2915	43.9832	45.6748
918	.9876	.8334	.6793	.5251	.3709	.2168	.0626	.9085	.7543	.6001	.2918	.9835	.6751
921	.9878	.8337	.6795	.5254	.3712	.2170	.0629	.9087	.7546	.6004	.2921	.9838	.6755
924	.9881	.8339	.6798	.5256	.3715	.2173	.0632	.9090	.7549	.6007	.2924	.9841	.6758
927	.9883	.8342	.6800	.5259	.3717	.2176	.0634	.9093	.7551	.6010	.2927	.9844	.6761
422930	32.9885	33.8344	34.6803	35.5261	36.3720	37.2178	38.0637	38.9096	39.7554	40.6013	42.2930	43.9847	45.6764
933	.9888	.8346	.6805	.5264	.3722	.2181	.0640	.9098	.7557	.6016	.2933	.9850	.6768
936	.9890	.8349	.6808	.5266	.3725	.2184	.0642	.9101	.7560	.6019	.2936	.9853	.6771
939	.9892	.8351	.6810	.5269	.3728	.2186	.0645	.9104	.7563	.6021	.2939	.9857	.6774
942	.9895	.8354	.6812	.5271	.3730	.2189	.0648	.9107	.7565	.6024	.2942	.9860	.6777
422945	32.9897	33.8356	34.6815	35.5274	36.3733	37.2192	38.0651	38.9109	39.7568	40.6027	42.2945	43.9863	45.6781
948	.9899	.8358	.6817	.5276	.3735	.2194	.0653	.9112	.7571	.6030	.2948	.9866	.6784
951	.9902	.8361	.6820	.5279	.3738	.2197	.0656	.9115	.7574	.6033	.2951	.9869	.6787
954	.9904	.8363	.6822	.5281	.3740	.2200	.0659	.9118	.7577	.6036	.2954	.9872	.6790
957	.9906	.8366	.6825	.5284	.3743	.2202	.0661	.9120	.7580	.6039	.2957	.9875	.6794
422960	32.9909	33.8368	34.6827	35.5286	36.3746	37.2205	38.0664	38.9123	39.7582	40.6042	42.2960	43.9878	45.6797
963	.9911	.8370	.6830	.5289	.3748	.2207	.0667	.9126	.7585	.6044	.2963	.9882	.6800
966	.9913	.8373	.6832	.5291	.3751	.2210	.0669	.9129	.7588	.6047	.2966	.9885	.6803
969	.9916	.8375	.6835	.5294	.3753	.2213	.0672	.9131	.7591	.6050	.2969	.9888	.6807
972	.9918	.8378	.6837	.5296	.3756	.2215	.0675	.9134	.7594	.6053	.2972	.9891	.6810
422975	32.9921	33.8380	34.6840	35.5299	36.3759	37.2218	38.0678	38.9137	39.7597	40.6056	42.2975	43.9894	45.6813
978	.9923	.8382	.6842	.5302	.3761	.2221	.0680	.9140	.7599	.6059	.2978	.9897	.6816
981	.9925	.8385	.6844	.5304	.3764	.2223	.0683	.9143	.7602	.6062	.2981	.9900	.6819
984	.9928	.8387	.6847	.5307	.3766	.2226	.0686	.9145	.7605	.6065	.2984	.9903	.6823
987	.9930	.8390	.6849	.5309	.3769	.2229	.0688	.9148	.7608	.6068	.2987	.9906	.6826
422990	32.9932	33.8392	34.6852	35.5312	36.3771	37.2231	38.0691	38.9151	39.7611	40.6070	42.2990	43.9910	45.6829
993	.9935	.8394	.6854	.5314	.3774	.2234	.0694	.9154	.7613	.6073	.2993	.9913	.6832
996	.9937	.8397	.6857	.5317	.3777	.2236	.0696	.9156	.7616	.6076	.2996	.9916	.6836
999	.9939	.8399	.6859	.5319	.3779	.2239	.0699	.9159	.7619	.6079	.2999	.9919	.6839
423002	.9942	.8402	.6862	.5322	.3782	.2242	.0702	.9162	.7622	.6082	.3002	.9922	.6842
423005	32.9944	33.8404	34.6864	35.5324	36.3784	37.2244	38.0705	38.9165	39.7625	40.6085	42.3005	43.9925	45.6845
008	.9946	.8406	.6867	.5327	.3787	.2247	.0707	.9167	.7628	.6088	.3008	.9928	.6849
011	.9949	.8409	.6869	.5329	.3789	.2250	.0710	.9170	.7630	.6091	.3011	.9931	.6852
014	.9951	.8411	.6871	.5332	.3792	.2252	.0713	.9173	.7633	.6093	.3014	.9935	.6855
017	.9953	.8414	.6874	.5334	.3795	.2255	.0715	.9176	.7636	.6096	.3017	.9938	.6858
423020	32.9956	33.8416	34.6876	35.5337	36.3797	37.2258	38.0718	38.9178	39.7639	40.6099	42.3020	43.9941	45.6862
023	.9958	.8418	.6879	.5339	.3800	.2260	.0721	.9181	.7642	.6102	.3023	.9944	.6865
026	.9960	.8421	.6881	.5342	.3802	.2263	.0723	.9184	.7644	.6105	.3026	.9947	.6868
029	.9963	.8423	.6884	.5344	.3805	.2266	.0726	.9187	.7647	.6108	.3029	.9950	.6871
032	.9965	.8426	.6886	.5347	.3808	.2268	.0729	.9189	.7650	.6111	.3032	.9953	.6875
423035	32.9967	33.8428	34.6889	35.5349	36.3810	37.2271	38.0732	38.9192	39.7653	40.6114	42.3035	43.9956	45.6878
038	.9970	.8430	.6891	.5352	.3813	.2273	.0734	.9195	.7656	.6116	.3038	.9960	.6881
041	.9972	.8433	.6894	.5354	.3815	.2276	.0737	.9198	.7659	.6119	.3041	.9963	.6884
044	.9974	.8435	.6896	.5357	.3818	.2279	.0740	.9200	.7661	.6122	.3044	.9966	.6888
047	.9977	.8438	.6899	.5359	.3820	.2281	.0742	.9203	.7664	.6125	.3047	.9969	.6891
423050	32.9979	33.8440	34.6901	35.5362	36.3823	37.2284	38.0745	38.9206	39.7667	40.6128	42.3050	43.9972	45.6894
053	.9981	.8442	.6903	.5365	.3826	.2287	.0748	.9209	.7670	.6131	.3053	.9975	.6897
056	.9984	.8445	.6906	.5367	.3828	.2289	.0750	.9212	.7673	.6134	.3056	.9978	.6900
059	.9986	.8447	.6908	.5370	.3831	.2292	.0753	.9214	.7675	.6137	.3059	.9981	.6904
062	.9988	.8450	.6911	.5372	.3833	.2295	.0756	.9217	.7678	.6140	.3062	.9984	.6907
423065	32.9991	33.8452	34.6913	35.5375	36.3836	37.2297	38.0759	38.9220	39.7681	40.6142	42.3065	43.9988	45.6910
068	.9993	.8454	.6916	.5377	.3838	.2300	.0761	.9223	.7684	.6145	.3068	.9991	.6913
071	.9995	.8457	.6918	.5380	.3841	.2302	.0764	.9225	.7687	.6148	.3071	.9994	.6917
074	.9998	.8459	.6921	.5382	.3844	.2305	.0767	.9228	.7690	.6151	.3074	.9997	.6920
077	33.0000	.8462	.6923	.5385	.3846	.2308	.0769	.9231	.7692	.6154	.3077	44.0000	.6923
423080	33.0002	33.8464	34.6926	35.5387	36.3849	37.2310	38.0772	38.9234	39.7695	40.6157	42.3080	44.0003	45.6926
083	.0005	.8466	.6928	.5390	.3851	.2313	.0775	.9236	.7698	.6160	.3083	.0006	.6930
086	.0007	.8469	.6931	.5392	.3854	.2316	.0777	.9239	.7701	.6163	.3086	.0009	.6933
089	.0009	.8471	.6933	.5395	.3857	.2318	.0780	.9242	.7704	.6165	.3089	.0013	.6936
092	.0012	.8474	.6935	.5397	.3859	.2321	.0783	.9245	.7706	.6168	.3092	.0016	.6939
423095	33.0014	33.8476	34.6938	35.5400	36.3862	37.2324	38.0786	38.9247	39.7709	40.6171	42.3095	44.0019	45.6943
098	.0016	.8478	.6940	.5402	.3864	.2326	.0788	.9250	.7712	.6174	.3098	.0022	.6946
101	.0019	.8481	.6943	.5405	.3867	.2329	.0791	.9253	.7715	.6177	.3101	.0025	.6959
104	.0021	.8483	.6945	.5407	.3869	.2332	.0794	.9256	.7718	.6180	.3104	.0028	.6952
107	.0023	.8486	.6948	.5410	.3872	.2334	.0796	.9258	.7721	.6183	.3107	.0031	.6956
423110	33.0026	33.8488	34.6950	35.5412	36.3875	37.2337	38.0799	38.9261	39.7723	40.6186	42.3110	44.0034	45.6959
113	.0028	.8490	.6953	.5415	.3877	.2339	.0802	.9264	.7726	.6188	.3113	.0038	.6962
116	.0030	.8493	.6955	.5417	.3880	.2342	.0804	.9267	.7729	.6191	.3116	.0041	.6965
119	.0033	.8495	.6958	.5420	.3882	.2345	.0807	.9269	.7732	.6194	.3119	.0044	.6969
122	.0035	.8498	.6960	.5422	.3885	.2347	.0810	.9272	.7735	.6197	.3122	.0047	.6972
423125	33.0038	33.8500	34.6963	35.5425	36.3888	37.2350	38.0813	38.9275	39.7738	40.6200	42.3125	44.0050	45.6975
128	.0040	.8502	.6965	.5428	.3890	.2353	.0815	.9278	.7740	.6203	.3128	.0053	.6978
131	.0042	.8505	.6967	.5430	.3893	.2355	.0818	.9281	.7743	.6206	.3131	.0056	.6981
134	.0045	.8507	.6970	.5433	.3895	.2358	.0821	.9283	.7746	.6209	.3134	.0059	.6985
137	.0047	.8510	.6972	.5435	.3898	.2361	.0823	.9286	.7749	.6212	.3137	.0062	.6988
423140	33.0049	33.8512	34.6975	35.5438	36.3900	37.2363	38.0826	38.9289	39.7752	40.6214	42.3140	44.0066	45.6991
143	.0052	.8514	.6977	.5440	.3903	.2366	.0829	.9292	.7754	.6217	.3143	.0069	.6994
146	.0054	.8517	.6980	.5443	.3906	.2368	.0831	.9294	.7757	.6220	.3146	.0072	.6998
149	.0056	.8519	.6982	.5445	.3908	.2371	.0834	.9297	.7760	.6223	.3149	.0075	.7001
152	.0059	.8522	.6985	.5448	.3911	.2374	.0837	.9300	.7763	.6226	.3152	.0078	.7004
423155	33.0061	33.8524	34.6987	35.5450	36.3913	37.2376	38.0840	38.9303	39.7766	40.6229	42.3155	44.0081	45.7007
158	.0063	.8526	.6990	.5453	.3916	.2379	.0842	.9305	.7769	.6232	.3158	.0084	.7011
161	.0066	.8529	.6992	.5455	.3918	.2382	.0845	.9308	.7771	.6235	.3161	.0087	.7014
164	.0068	.8531	.6994	.5458	.3921	.2384	.0848	.9311	.7774	.6237	.3164	.0091	.7017
167	.0070	.8534	.6997	.5460	.3924	.2387	.0850	.9314	.7777	.6240	.3167	.0094	.7020
423170	33.0073	33.8536	34.6999	35.5463	36.3926	37.2390	38.0853	38.9316	39.7780	40.6243	42.3170	44.0097	45.7024
173	.0075	.8538	.7002	.5465	.3929	.2392	.0856	.9319	.7783	.6246	.3173	.0100	.7027
176	.0077	.8541	.7004	.5468	.3931	.2395	.0858	.9322	.7785	.6249	.3176	.0103	.7030
179	.0080	.8543	.7007	.5470	.3934	.2398	.0861	.9325	.7788	.6252	.3179	.0106	.7033
182	.0082	.8546	.7009	.5473	.3937	.2400	.0864	.9327	.7791	.6255	.3182	.0109	.7037
423185	33.0084	33.8548	34.7012	35.5475	36.3939	37.2403	38.0867	38.9330	39.7794	40.6258	42.3185	44.0112	45.7040
188	.0087	.8550	.7014	.5478	.3942	.2405	.0869	.9333	.7797	.6260	.3188	.0116	.7043
191	.0089	.8553	.7017	.5480	.3944	.2408	.0872	.9336	.7800	.6263	.3191	.0119	.7046
194	.0091	.8555	.7019	.5483	.3947	.2411	.0875	.9338	.7802	.6266	.3194	.0122	.7050
197	.0094	.8558	.7022	.5485	.3949	.2413	.0877	.9341	.7805	.6269	.3197	.0125	.7053
423200	33.0096	33.8560	34.7024	35.5488	36.3952	37.2416	38.0880	38.9344	39.7808	40.6272	42.3200	44.0128	45.7056

H A R M O N I C S

BASIC FREQ.	52	54	56	58	60	62	64	66	68	70	72	74	76
423200	22.0064	22.8528	23.6992	24.5456	25.3920	26.2384	27.0848	27.9312	28.7776	29.6240	30.4704	31.3168	32.1632
203	.0066	.8530	.6994	.5458	.3922	.2386	.0850	.9314	.7778	.6242	.4706	.3170	.1634
206	.0067	.8531	.6995	.5459	.3924	.2388	.0852	.9316	.7780	.6244	.4708	.3172	.1637
209	.0069	.8533	.6997	.5461	.3925	.2390	.0854	.9318	.7782	.6246	.4710	.3175	.1639
212	.0070	.8534	.6999	.5463	.3927	.2391	.0856	.9320	.7784	.6248	.4713	.3177	.1641
423215	22.0072	22.8536	23.7000	24.5465	25.3929	26.2393	27.0858	27.9322	28.7786	29.6251	30.4715	31.3179	32.1643
218	.0073	.8538	.7002	.5466	.3931	.2395	.0860	.9324	.7788	.6253	.4717	.3181	.1646
221	.0075	.8539	.7004	.5468	.3933	.2397	.0861	.9326	.7790	.6255	.4719	.3184	.1648
224	.0076	.8541	.7005	.5470	.3934	.2399	.0863	.9328	.7792	.6257	.4721	.3186	.1650
227	.0078	.8543	.7007	.5472	.3936	.2401	.0865	.9330	.7794	.6259	.4723	.3188	.1653
423230	22.0080	22.8544	23.7009	24.5473	25.3938	26.2403	27.0867	27.9332	28.7796	29.6261	30.4726	31.3190	32.1655
233	.0081	.8546	.7010	.5475	.3940	.2404	.0869	.9334	.7798	.6263	.4728	.3192	.1657
236	.0083	.8547	.7012	.5477	.3942	.2406	.0871	.9336	.7800	.6265	.4730	.3195	.1659
239	.0084	.8549	.7014	.5479	.3943	.2408	.0873	.9338	.7803	.6267	.4732	.3197	.1662
242	.0086	.8551	.7016	.5480	.3945	.2410	.0875	.9340	.7805	.6269	.4734	.3199	.1664
423245	22.0087	22.8552	23.7017	24.5482	25.3947	26.2412	27.0877	27.9342	28.7807	29.6272	30.4736	31.3201	32.1666
248	.0089	.8554	.7019	.5484	.3949	.2414	.0879	.9344	.7809	.6274	.4739	.3204	.1668
251	.0091	.8556	.7021	.5486	.3951	.2416	.0881	.9346	.7811	.6276	.4741	.3206	.1671
254	.0092	.8557	.7022	.5487	.3952	.2417	.0883	.9348	.7813	.6278	.4743	.3208	.1673
257	.0094	.8559	.7024	.5489	.3954	.2419	.0884	.9350	.7815	.6280	.4745	.3210	.1675
423260	22.0095	22.8560	23.7026	24.5491	25.3956	26.2421	27.0886	27.9352	28.7817	29.6282	30.4747	31.3212	32.1678
263	.0097	.8562	.7027	.5493	.3958	.2423	.0888	.9354	.7819	.6284	.4749	.3215	.1680
266	.0098	.8564	.7029	.5494	.3960	.2425	.0890	.9556	.7821	.6286	.4752	.3217	.1682
269	.0100	.8565	.7031	.5496	.3961	.2427	.0892	.9358	.7823	.6288	.4754	.3219	.1684
272	.0101	.8567	.7032	.5498	.3963	.2429	.0894	.9360	.7825	.6290	.4756	.3221	.1687
423275	22.0103	22.8569	23.7034	24.5500	25.3965	26.2431	27.0896	27.9362	28.7827	29.6293	30.4758	31.3224	32.1689
278	.0105	.8570	.7036	.5501	.3967	.2432	.0898	.9363	.7829	.6295	.4760	.3226	.1691
281	.0106	.8572	.7037	.5503	.3969	.2434	.0900	.9365	.7831	.6297	.4762	.3228	.1694
284	.0108	.8573	.7039	.5505	.3970	.2436	.0902	.9367	.7833	.6299	.4764	.3230	.1696
287	.0109	.8575	.7041	.5506	.3972	.2438	.0904	.9369	.7835	.6301	.4767	.3232	.1698
423290	22.0111	22.8577	23.7042	24.5508	25.3974	26.2440	27.0906	27.9371	28.7837	29.6303	30.4769	31.3235	32.1700
293	.0112	.8578	.7044	.5510	.3976	.2442	.0908	.9373	.7839	.6305	.4771	.3237	.1703
296	.0114	.8580	.7046	.5512	.3978	.2444	.0909	.9375	.7841	.6307	.4773	.3239	.1705
299	.0115	.8581	.7047	.5513	.3979	.2445	.0911	.9377	.7843	.6309	.4775	.3241	.1707
302	.0117	.8583	.7049	.5515	.3981	.2447	.0913	.9379	.7845	.6311	.4777	.3243	.1710
423305	22.0119	22.8585	23.7051	24.5517	25.3983	26.2449	27.0915	27.9381	28.7847	29.6314	30.4780	31.3246	32.1712
308	.0120	.8586	.7052	.5519	.3985	.2451	.0917	.9383	.7849	.6316	.4782	.3248	.1714
311	.0122	.8588	.7054	.5520	.3987	.2453	.0919	.9385	.7851	.6318	.4784	.3250	.1716
314	.0123	.8590	.7056	.5522	.3988	.2455	.0921	.9387	.7854	.6320	.4786	.3252	.1719
317	.0125	.8591	.7058	.5524	.3990	.2457	.0923	.9389	.7856	.6322	.4788	.3255	.1721
423320	22.0126	22.8593	23.7059	24.5526	25.3992	26.2458	27.0925	27.9391	28.7858	29.6324	30.4790	31.3257	32.1723
323	.0128	.8594	.7061	.5527	.3994	.2460	.0927	.9393	.7860	.6326	.4793	.3259	.1725
326	.0130	.8596	.7063	.5529	.3996	.2462	.0929	.9395	.7862	.6328	.4795	.3261	.1728
329	.0131	.8598	.7064	.5531	.3997	.2464	.0931	.9397	.7864	.6330	.4797	.3263	.1730
332	.0133	.8599	.7066	.5533	.3999	.2466	.0932	.9399	.7866	.6332	.4799	.3266	.1732
423335	22.0134	22.8601	23.7068	24.5534	25.4001	26.2488	27.0934	27.9401	28.7868	29.6335	30.4801	31.3268	32.1735
338	.0136	.8603	.7069	.5536	.4003	.2470	.0936	.9403	.7870	.6337	.4803	.3270	.1737
341	.0137	.8604	.7071	.5538	.4005	.2471	.0938	.9405	.7872	.6339	.4806	.3272	.1739
344	.0139	.8606	.7073	.5540	.4006	.2473	.0940	.9407	.7874	.6341	.4808	.3275	.1741
347	.0140	.8607	.7074	.5541	.4008	.2475	.0942	.9409	.7876	.6343	.4810	.3277	.1744
423350	22.0142	22.8609	23.7076	24.5543	25.4010	26.2477	27.0944	27.9411	28.7878	29.6345	30.4812	31.3279	32.1746
353	.0144	.8611	.7078	.5545	.4012	.2479	.0946	.9413	.7880	.6347	.4814	.3281	.1748
356	.0145	.8612	.7079	.5546	.4014	.2481	.0948	.9415	.7882	.6349	.4816	.3283	.1751
359	.0147	.8614	.7081	.5548	.4015	.2483	.0950	.9417	.7884	.6351	.4818	.3286	.1753
362	.0148	.8615	.7083	.5550	.4017	.2484	.0952	.9419	.7886	.6353	.4821	.3288	.1755
423365	22.0150	22.8617	23.7084	24.5552	25.4019	26.2486	27.0954	27.9421	28.7888	29.6356	30.4823	31.3290	32.1757
368	.0151	.8619	.7086	.5553	.4021	.2488	.0956	.9423	.7890	.6358	.4825	.3292	.1760
371	.0153	.8620	.7088	.5555	.4023	.2490	.0957	.9425	.7892	.6360	.4827	.3295	.1762
374	.0154	.8622	.7089	.5557	.4024	.2492	.0959	.9427	.7894	.6362	.4829	.3297	.1764
377	.0156	.8624	.7091	.5559	.4026	.2494	.0961	.9429	.7896	.6364	.4831	.3299	.1767
423380	22.0158	22.8625	23.7093	24.5560	25.4028	26.2496	27.0963	27.9431	28.7898	29.6366	30.4834	31.3301	32.1769
383	.0159	.8627	.7094	.5562	.4030	.2497	.0965	.9433	.7900	.6368	.4836	.3303	.1771
386	.0161	.8628	.7096	.5564	.4032	.2499	.0967	.9435	.7902	.6370	.4838	.3306	.1773
389	.0162	.8630	.7098	.5566	.4033	.2501	.0969	.9437	.7905	.6372	.4840	.3308	.1776
392	.0164	.8632	.7100	.5567	.4035	.2503	.0971	.9439	.7907	.6374	.4842	.3310	.1778
423395	22.0165	22.8633	23.7101	24.5569	25.4037	26.2505	27.0973	27.9441	28.7909	29.6377	30.4844	31.3312	32.1780
398	.0167	.8635	.7103	.5571	.4039	.2507	.0975	.9443	.7911	.6379	.4847	.3315	.1782
401	.0169	.8637	.7105	.5573	.4041	.2509	.0977	.9445	.7913	.6381	.4849	.3317	.1785
404	.0170	.8638	.7106	.5574	.4042	.2510	.0979	.9447	.7915	.6383	.4851	.3319	.1787
407	.0172	.8640	.7108	.5576	.4044	.2512	.0980	.9449	.7917	.6385	.4853	.3321	.1789
423410	22.0173	22.8641	23.7110	24.5578	25.4046	26.2514	27.0982	27.9451	28.7919	29.6387	30.4855	31.3323	32.1792
413	.0175	.8643	.7111	.5580	.4048	.2516	.0984	.9453	.7921	.6389	.4857	.3326	.1794
416	.0176	.8645	.7113	.5581	.4050	.2518	.0986	.9455	.7923	.6391	.4860	.3328	.1796
419	.0178	.8646	.7115	.5583	.4051	.2520	.0988	.9457	.7925	.6393	.4862	.3330	.1798
422	.0179	.8648	.7116	.5585	.4053	.2522	.0990	.9459	.7927	.6395	.4864	.3332	.1801
423425	22.0181	22.8650	23.7118	24.5587	25.4055	26.2524	27.0992	27.9461	28.7929	29.6398	30.4866	31.3335	32.1803
428	.0183	.8651	.7120	.5588	.4057	.2525	.0994	.9462	.7931	.6400	.4868	.3337	.1805
431	.0184	.8653	.7121	.5590	.4059	.2527	.0996	.9464	.7933	.6402	.4870	.3339	.1808
434	.0186	.8654	.7123	.5592	.4060	.2529	.0998	.9466	.7935	.6404	.4872	.3341	.1810
437	.0187	.8656	.7125	.5593	.4062	.2531	.1000	.9468	.7937	.6406	.4875	.3343	.1812
423440	22.0189	22.8658	23.7126	24.5595	25.4064	26.2533	27.1002	27.9470	28.7939	29.6408	30.4877	31.3346	32.1814
443	.0190	.8659	.7128	.5597	.4066	.2535	.1004	.9472	.7941	.6410	.4879	.3348	.1817
446	.0192	.8661	.7130	.5590	.4068	.2537	.1005	.9474	.7943	.6412	.4881	.3350	.1819
449	.0193	.8662	.7131	.5600	.4069	.2538	.1007	.9476	.7945	.6414	.4883	.3352	.1821
452	.0195	.8664	.7133	.5602	.4071	.2540	.1009	.9478	.7947	.6416	.4885	.3354	.1824
423455	22.0197	22.8666	23.7135	24.5604	25.4073	26.2542	27.1011	27.9480	28.7949	29.6419	30.4888	31.3357	32.1826
458	.0198	.8667	.7136	.5606	.4075	.2544	.1013	.9482	.7951	.6421	.4890	.3359	.1828
461	.0200	.8669	.7138	.5607	.4077	.2546	.1015	.9484	.7953	.6423	.4892	.3361	.1830
464	.0201	.8671	.7140	.5609	.4078	.2548	.1017	.9486	.7956	.6425	.4894	.3363	.1833
467	.0203	.8672	.7142	.5611	.4080	.2550	.1019	.9488	.7958	.6427	.4896	.3366	.1835
423470	22.0204	22.8674	23.7143	24.5613	25.4082	26.2551	27.1021	27.9490	28.7960	29.6429	30.4898	31.3368	32.1837
473	.0206	.8675	.7145	.5614	.4084	.2553	.1023	.9492	.7962	.6431	.4901	.3370	.1839
476	.0208	.8677	.7147	.5616	.4086	.2555	.1025	.9494	.7964	.6433	.4903	.3372	.1842
479	.0209	.8679	.7148	.5618	.4087	.2557	.1027	.9496	.7966	.6435	.4905	.3374	.1844
482	.0211	.8680	.7150	.5620	.4089	.2559	.1028	.9498	.7968	.6437	.4907	.3377	.1846
423485	22.0212	22.8682	23.7152	24.5621	25.4091	26.2561	27.1030	27.9500	28.7970	29.6440	30.4909	31.3379	32.1849
488	.0214	.8684	.7153	.5623	.4093	.2563	.1032	.9502	.7972	.6442	.4911	.3381	.1851
491	.0215	.8685	.7155	.5625	.4095	.2564	.1034	.9504	.7974	.6444	.4914	.3383	.1853
494	.0217	.8687	.7157	.5627	.4096	.2566	.1036	.9506	.7976	.6446	.4916	.3386	.1855
497	.0218	.8688	.7158	.5628	.4098	.2568	.1038	.9508	.7978	.6448	.4918	.3388	.1858
423500	22.0220	22.8690	23.7160	24.5630	25.4100	26.2570	27.1040	27.9510	28.7980	29.6450	30.4920	31.3390	32.1860

MEGACYCLES PER SECOND

HARMONICS

BASIC FREQ.	78	80	82	84	86	88	90	92	94	96	100	104	108
423200	33.0096	33.8560	34.7024	35.5488	36.3952	37.2416	38.0880	38.9344	39.7808	40.6272	42.3200	44.0128	45.7056
203	.0098	.8562	.7026	.5491	.3955	.2419	.0883	.9347	.7811	.6275	.3203	.0131	.7059
206	.0101	.8565	.7029	.5493	.3957	.2421	.0885	.9350	.7814	.6278	.3206	.0134	.7062
209	.0103	.8567	.7031	.5496	.3960	.2424	.0888	.9352	.7816	.6281	.3209	.0137	.7066
212	.0105	.8570	.7034	.5498	.3962	.2427	.0891	.9355	.7819	.6284	.3212	.0140	.7069
423215	33.0108	33.8572	34.7036	35.5501	36.3965	37.2429	38.0894	38.9358	39.7822	40.6286	42.3215	44.0144	45.7072
218	.0110	.8574	.7039	.5503	.3967	.2432	.0896	.9361	.7825	.6289	.3218	.0147	.7075
221	.0112	.8577	.7041	.5506	.3970	.2434	.0899	.9363	.7828	.6292	.3221	.0150	.7079
224	.0115	.8579	.7044	.5508	.3973	.2437	.0902	.9366	.7831	.6295	.3224	.0153	.7082
227	.0117	.8582	.7046	.5511	.3975	.2440	.0904	.9369	.7833	.6298	.3227	.0156	.7085
423230	33.0119	33.8584	34.7049	35.5513	36.3978	37.2442	38.0907	38.9372	39.7836	40.6301	42.3230	44.0159	45.7088
233	.0122	.8586	.7051	.5516	.3980	.2445	.0910	.9374	.7839	.6304	.3233	.0162	.7092
236	.0124	.8589	.7054	.5518	.3983	.2448	.0912	.9377	.7842	.6307	.3236	.0165	.7095
239	.0126	.8591	.7056	.5521	.3986	.2450	.0915	.9380	.7845	.6309	.3239	.0169	.7098
242	.0129	.8594	.7058	.5523	.3988	.2453	.0918	.9383	.7847	.6312	.3242	.0172	.7101
423245	33.0131	33.8596	34.7061	35.5526	36.3991	37.2456	38.0921	38.9385	39.7850	40.6315	42.3245	44.0175	45.7105
248	.0133	.8598	.7063	.5528	.3993	.2458	.0923	.9388	.7853	.6318	.3248	.0178	.7108
251	.0136	.8601	.7066	.5531	.3996	.2461	.0926	.9391	.7856	.6321	.3251	.0181	.7111
254	.0138	.8603	.7068	.5533	.3998	.2464	.0929	.9394	.7859	.6324	.3254	.0184	.7114
257	.0140	.8606	.7071	.5536	.4001	.2466	.0931	.9396	.7862	.6327	.3257	.0187	.7118
423260	33.0143	33.8608	34.7073	35.5538	36.4004	37.2469	38.0934	38.9399	39.7864	40.6330	42.3260	44.0190	45.7121
263	.0145	.8610	.7076	.5541	.4006	.2471	.0937	.9402	.7867	.6332	.3263	.0194	.7124
266	.0147	.8613	.7078	.5543	.4009	.2474	.0939	.9405	.7870	.6335	.3266	.0197	.7127
269	.0150	.8615	.7081	.5546	.4011	.2477	.0942	.9407	.7873	.6338	.3269	.0200	.7131
272	.0152	.8618	.7083	.5548	.4014	.2479	.0945	.9410	.7876	.6341	.3272	.0203	.7134
423275	33.0155	33.8620	34.7086	35.5551	36.4017	37.2482	38.0948	38.9413	39.7879	40.6344	42.3275	44.0206	45.7137
278	.0157	.8622	.7088	.5554	.4019	.2485	.0950	.9416	.7881	.6347	.3278	.0209	.7140
281	.0159	.8625	.7090	.5556	.4022	.2487	.0953	.9419	.7884	.6350	.3281	.0212	.7143
284	.0162	.8627	.7093	.5559	.4024	.2490	.0956	.9421	.7887	.6353	.3284	.0215	.7147
287	.0164	.8630	.7095	.5561	.4027	.2493	.0958	.9424	.7890	.6356	.3287	.0218	.7150
423290	33.0166	33.8632	34.7098	35.5564	36.4029	37.2495	38.0961	38.9427	39.7893	40.6358	42.3290	44.0222	45.7153
293	.0169	.8634	.7100	.5566	.4032	.2498	.0964	.9430	.7895	.6361	.3293	.0225	.7156
296	.0171	.8637	.7103	.5569	.4035	.2500	.0966	.9432	.7898	.6364	.3296	.0228	.7160
299	.0173	.8639	.7105	.5571	.4037	.2503	.0969	.9435	.7901	.6367	.3299	.0231	.7163
302	.0176	.8642	.7108	.5574	.4040	.2506	.0972	.9438	.7904	.6370	.3302	.0234	.7166
423305	33.0178	33.8644	34.7110	35.5576	36.4042	37.2508	38.0975	38.9441	39.7907	40.6373	42.3305	44.0237	45.7169
308	.0180	.8646	.7113	.5579	.4045	.2511	.0977	.9443	.7910	.6376	.3308	.0240	.7173
311	.0183	.8649	.7115	.5581	.4047	.2514	.0980	.9446	.7912	.6379	.3311	.0243	.7176
314	.0185	.8651	.7117	.5584	.4050	.2516	.0983	.9449	.7915	.6381	.3314	.0247	.7179
317	.0187	.8654	.7120	.5586	.4053	.2519	.0985	.9452	.7918	.6384	.3317	.0250	.7182
423320	33.0190	33.8656	34.7122	35.5589	36.4055	37.2522	38.0988	38.9454	39.7921	40.6387	42.3320	44.0253	45.7186
323	.0192	.8658	.7125	.5591	.4058	.2524	.0991	.9457	.7924	.6390	.3323	.0256	.7189
326	.0194	.8661	.7127	.5594	.4060	.2527	.0993	.9460	.7926	.6393	.3326	.0259	.7192
329	.0197	.8663	.7130	.5596	.4063	.2530	.0996	.9463	.7929	.6396	.3329	.0262	.7195
332	.0199	.8666	.7132	.5599	.4066	.2532	.0999	.9465	.7932	.6399	.3332	.0265	.7199
423335	33.0201	33.8668	34.7135	35.5601	36.4068	37.2535	38.1002	38.9468	39.7935	40.6402	42.3335	44.0268	45.7202
338	.0204	.8670	.7137	.5604	.4071	.2537	.1004	.9471	.7938	.6404	.3338	.0272	.7205
341	.0206	.8673	.7140	.5606	.4073	.2540	.1007	.9474	.7941	.6407	.3341	.0275	.7208
344	.0208	.8675	.7142	.5609	.4076	.2543	.1010	.9476	.7943	.6410	.3344	.0278	.7212
347	.0211	.8678	.7145	.5611	.4078	.2545	.1012	.9479	.7946	.6413	.3347	.0281	.7215
423350	33.0213	33.8680	34.7147	35.5614	36.4081	37.2548	38.1015	38.9482	39.7949	40.6416	42.3350	44.0284	45.7218
353	.0215	.8682	.7149	.5617	.4084	.2551	.1018	.9485	.7952	.6419	.3353	.0287	.7221
356	.0218	.8685	.7152	.5619	.4086	.2553	.1020	.9488	.7955	.6422	.3356	.0290	.7224
359	.0220	.8687	.7154	.5622	.4089	.2556	.1023	.9490	.7957	.6425	.3359	.0293	.7228
362	.0222	.8690	.7157	.5624	.4091	.2559	.1026	.9493	.7960	.6428	.3362	.0296	.7231
423365	33.0225	33.8692	34.7159	35.5627	36.4094	37.2561	38.1029	38.9496	39.7963	40.6430	42.3365	44.0300	45.7234
368	.0227	.8694	.7162	.5629	.4096	.2564	.1031	.9499	.7966	.6433	.3368	.0303	.7237
371	.0229	.8697	.7164	.5632	.4099	.2566	.1034	.9501	.7969	.6436	.3371	.0306	.7241
374	.0232	.8699	.7167	.5634	.4102	.2569	.1037	.9504	.7972	.6439	.3374	.0309	.7244
377	.0234	.8702	.7169	.5637	.4104	.2572	.1039	.9507	.7974	.6442	.3377	.0312	.7247
423380	33.0236	33.8704	34.7172	35.5639	36.4107	37.2574	38.1042	38.9510	39.7977	40.6445	42.3380	44.0315	45.7250
383	.0239	.8706	.7174	.5642	.4109	.2577	.1045	.9512	.7980	.6448	.3383	.0318	.7254
386	.0241	.8709	.7177	.5644	.4112	.2580	.1047	.9515	.7983	.6451	.3386	.0321	.7257
389	.0243	.8711	.7179	.5647	.4115	.2582	.1050	.9518	.7986	.6453	.3389	.0325	.7260
392	.0246	.8714	.7181	.5649	.4117	.2585	.1053	.9521	.7988	.6456	.3392	.0328	.7263
423395	33.0248	33.8716	34.7184	35.5652	36.4120	37.2588	38.1056	38.9523	39.7991	40.6459	42.3395	44.0331	45.7267
398	.0250	.8718	.7186	.5654	.4122	.2590	.1058	.9526	.7994	.6462	.3398	.0334	.7270
401	.0253	.8721	.7189	.5657	.4125	.2593	.1061	.9529	.7997	.6465	.3401	.0337	.7273
404	.0255	.8723	.7191	.5659	.4127	.2596	.1064	.9532	.8000	.6468	.3404	.0340	.7276
407	.0257	.8726	.7194	.5662	.4130	.2598	.1066	.9534	.8003	.6471	.3407	.0343	.7280
423410	33.0260	33.8728	34.7196	35.5664	36.4133	37.2601	38.1069	38.9537	39.8005	40.6474	42.3410	44.0346	45.7283
413	.0262	.8730	.7199	.5667	.4135	.2603	.1072	.9540	.8008	.6476	.3413	.0350	.7286
416	.0264	.8733	.7201	.5669	.4138	.2606	.1074	.9543	.8011	.6479	.3416	.0353	.7289
419	.0267	.8735	.7204	.5672	.4140	.2609	.1077	.9545	.8014	.6482	.3419	.0356	.7293
422	.0269	.8738	.7206	.5674	.4143	.2611	.1080	.9548	.8017	.6485	.3422	.0359	.7296
423425	33.0272	33.8740	34.7209	35.5677	36.4146	37.2614	38.1083	38.9551	39.8020	40.6488	42.3425	44.0362	45.7299
428	.0274	.8742	.7211	.5680	.4148	.2617	.1085	.9554	.8022	.6491	.3428	.0365	.7302
431	.0276	.8745	.7213	.5682	.4151	.2619	.1088	.9557	.8025	.6494	.3431	.0368	.7305
434	.0279	.8747	.7216	.5685	.4153	.2622	.1091	.9559	.8028	.6497	.3434	.0371	.7309
437	.0281	.8750	.7218	.5687	.4156	.2625	.1093	.9562	.8031	.6500	.3437	.0374	.7312
423440	33.0283	33.8752	34.7221	35.5690	36.4158	37.2627	38.1096	38.9565	39.8034	40.6502	42.3440	44.0378	45.7315
443	.0286	.8754	.7223	.5692	.4161	.2630	.1099	.9568	.8036	.6505	.3443	.0381	.7318
446	.0288	.8757	.7226	.5695	.4164	.2632	.1101	.9570	.8039	.6508	.3446	.0384	.7322
449	.0290	.8759	.7228	.5697	.4166	.2635	.1104	.9573	.8042	.6511	.3449	.0387	.7325
452	.0293	.8762	.7231	.5700	.4169	.2638	.1107	.9576	.8045	.6514	.3452	.0390	.7328
423455	33.0295	33.8764	34.7233	35.5702	36.4171	37.2640	38.1110	38.9579	39.8048	40.6517	42.3455	44.0393	45.7331
458	.0297	.8766	.7236	.5705	.4174	.2643	.1112	.9581	.8051	.6520	.3458	.0396	.7335
461	.0300	.8769	.7238	.5707	.4176	.2646	.1115	.9584	.8053	.6523	.3461	.0399	.7338
464	.0302	.8771	.7240	.5710	.4179	.2648	.1118	.9587	.8056	.6525	.3464	.0403	.7341
467	.0304	.8774	.7243	.5712	.4182	.2651	.1120	.9590	.8059	.6528	.3467	.0406	.7344
423470	33.0307	33.8776	34.7245	35.5715	36.4184	37.2654	38.1123	38.9592	39.8062	40.6531	42.3470	44.0409	45.7348
473	.0309	.8778	.7248	.5717	.4187	.2656	.1126	.9595	.8065	.6534	.3473	.0412	.7351
476	.0311	.8781	.7250	.5720	.4189	.2659	.1128	.9598	.8067	.6537	.3476	.0415	.7354
499	.0314	.8783	.7253	.5722	.4192	.2662	.1131	.9601	.8070	.6540	.3479	.0418	.7357
482	.0316	.8786	.7255	.5725	.4195	.2664	.1134	.9603	.8073	.6543	.3482	.0421	.7361
423485	33.0318	33.8788	34.7258	35.5727	36.4197	37.2667	38.1137	38.9606	39.8076	40.6546	42.3485	44.0424	45.7364
488	.0321	.8790	.7260	.5730	.4200	.2669	.1139	.9609	.8079	.6548	.3488	.0428	.7367
491	.0323	.8793	.7263	.5732	.4202	.2672	.1142	.9612	.8082	.6551	.3491	.0431	.7370
494	.0325	.8795	.7265	.5735	.4205	.2675	.1145	.9614	.8084	.6554	.3494	.0434	.7374
497	.0328	.8798	.7268	.5737	.4207	.2677	.1147	.9617	.8087	.6557	.3497	.0437	.7377
423500	33.0330	33.8800	34.7270	35.5740	36.4210	37.2680	38.1150	38.9620	39.8090	40.6560	42.3500	44.0440	45.7380

H A R M O N I C S

BASIC FREQ.	52	54	56	58	60	62	64	66	68	70	72	74	76
423500	22.0220	22.8690	23.7160	24.5630	25.4100	26.2570	27.1040	27.9510	28.7980	29.6450	30.4920	31.3390	32.1860
503	.0222	.8692	.7162	.5632	.4102	.2572	.1042	.9512	.7982	.6452	.4922	.3392	.1862
506	.0223	.8693	.7163	.5633	.4104	.2574	.1044	.9514	.7984	.6454	.4924	.3394	.1865
509	.0225	.8695	.7165	.5635	.4105	.2576	.1046	.9516	.7986	.6456	.4926	.3397	.1867
512	.0226	.8696	.7167	.5637	.4107	.2577	.1048	.9518	.7988	.6458	.4929	.3399	.1869
423515	22.0228	22.8698	23.7168	24.5639	25.4109	26.2579	27.1050	27.9520	28.7990	29.6461	30.4931	31.3401	32.1871
518	.0229	.8700	.7170	.5640	.4111	.2581	.1052	.9522	.7992	.6463	.4933	.3403	.1874
521	.0231	.8701	.7172	.5642	.4113	.2583	.1053	.9524	.7994	.6465	.4935	.3406	.1876
524	.0232	.8703	.7173	.5644	.4114	.2585	.1055	.9526	.7996	.6467	.4937	.3408	.1878
527	.0234	.8705	.7175	.5646	.4116	.2587	.1057	.9528	.7998	.6469	.4939	.3410	.1881
423530	22.0236	22.8706	23.7177	24.5647	25.4118	26.2589	27.1059	27.9530	28.8000	29.6471	30.4942	31.3412	32.1883
533	.0237	.8708	.7178	.5649	.4120	.2590	.1061	.9532	.8002	.6473	.4934	.3414	.1885
536	.0239	.8709	.7180	.5651	.4122	.2592	.1063	.9534	.8004	.6475	.4946	.3417	.1887
539	.0240	.8711	.7182	.5653	.4123	.2594	.1065	.9536	.8007	.6477	.4948	.3419	.1890
542	.0242	.8713	.7184	.5654	.4125	.2596	.1067	.9538	.8009	.6479	.4950	.3421	.1892
423545	22.0243	22.8714	23.7185	24.5656	25.4127	26.2598	27.1069	27.9540	28.8011	29.6482	30.4952	31.3423	32.1894
548	.0245	.8716	.7187	.5658	.4129	.2600	.1071	.9542	.8013	.6484	.4955	.3426	.1896
551	.0247	.8718	.7189	.5660	.4131	.2602	.1073	.9544	.8015	.6486	.4957	.3428	.1899
554	.0248	.8719	.7190	.5661	.4132	.2603	.1075	.9546	.8017	.6488	.4959	.3430	.1901
557	.0250	.8721	.7192	.5663	.4134	.2605	.1076	.9548	.8019	.6490	.4961	.3432	.1903
423560	22.0251	22.8722	23.7194	24.5665	25.4136	26.2607	27.1078	27.9550	28.8021	29.6492	30.4963	31.3434	32.1906
563	.0253	.8724	.7195	.5667	.4138	.2609	.1080	.9552	.8023	.6494	.4965	.3437	.1908
566	.0254	.8726	.7197	.5668	.4140	.2611	.1082	.9554	.8025	.6496	.4968	.3439	.1920
569	.0256	.8727	.7199	.5670	.4141	.2613	.1084	.9556	.8027	.6498	.4970	.3441	.1912
572	.0257	.8729	.7200	.5672	.4143	.2615	.1086	.9558	.8029	.6500	.4972	.3443	.1915
423575	22.0259	22.8731	23.7202	24.5674	25.4145	26.2617	27.1088	27.9560	28.8031	29.6503	30.4974	31.3446	32.1917
578	.0261	.8732	.7204	.5675	.4147	.2618	.1090	.9561	.8033	.6505	.4976	.3448	.1919
581	.0262	.8734	.7205	.5677	.4149	.2620	.1092	.9563	.8035	.6507	.4978	.3450	.1922
584	.0264	.8735	.7207	.5679	.4150	.2622	.1094	.9565	.8037	.6509	.4980	.3452	.1924
587	.0265	.8737	.7209	.5680	.4152	.2624	.1096	.9567	.8039	.6511	.4983	.3454	.1926
423590	22.0267	22.8739	23.7210	24.5682	25.4154	26.2626	27.1098	27.9569	28.8041	29.6513	30.4985	31.3457	32.1928
593	.0268	.8740	.7212	.5684	.4156	.2628	.1100	.9571	.8043	.6515	.4987	.3459	.1931
596	.0270	.8742	.7214	.5686	.4158	.2630	.1101	.9573	.8045	.6517	.4989	.3461	.1933
599	.0271	.8743	.7215	.5687	.4159	.2631	.1103	.9575	.8047	.6519	.4991	.3463	.1935
602	.0273	.8745	.7217	.5689	.4161	.2633	.1105	.9577	.8049	.6521	.4993	.3465	.1938
423605	22.0275	22.8747	23.7219	24.5691	25.4163	26.2635	27.1107	27.9579	28.8051	29.6524	30.4996	31.3468	32.1947
608	.0276	.8748	.7220	.5693	.4165	.2637	.1109	.9581	.8053	.6526	.4998	.3470	.1944
611	.0278	.8750	.7222	.5694	.4167	.2639	.1111	.9583	.8055	.6528	.5000	.3472	.1942
614	.0279	.8752	.7224	.5696	.4168	.2641	.1113	.9585	.8058	.6530	.5002	.3474	.1940
617	.0281	8753	.7226	.5698	.4170	.2643	.1115	.9587	.8060	.6532	.5004	.3477	.1949
423620	22.0282	22.8755	23.7227	24.5700	25.4172	26.2644	27.1117	27.9589	28.8062	29.6534	30.5006	31.3479	32.1951
623	.0284	.8756	.7229	.5701	.4174	.2646	.1119	.9591	.8064	.6536	.5009	.3481	.1953
626	.0286	.8758	.7231	.5703	.4176	.2648	.1121	.9593	.8066	.6538	.5011	.3483	.1956
629	.0287	.8760	.7232	.5705	.4177	.2650	.1123	.9595	.8068	.6540	.5013	.3485	.1958
632	.0289	.8761	.7234	.5707	.4179	.2652	.1124	.9597	.8070	.6542	.5015	.3488	.1960
423635	22.0290	22.8763	23.7236	24.5708	25.4181	26.2654	27.1126	27.9599	28.8072	29.6545	30.5017	31.3490	32.1963
638	.0292	.8765	.7237	.5710	.4183	.2656	.1128	.9601	.8074	.6547	.5019	.3492	.1965
641	.0293	.8766	.7239	.5712	.4185	.2657	.1130	.9603	.8076	.6549	.5022	.3494	.1967
644	.0295	.8768	.7241	.5714	.4186	.2659	.1132	.9605	.8078	.6551	.5024	.3497	.1969
647	.0296	.8769	.7242	.5715	.4188	.2661	.1134	.9607	.8080	.6553	.5026	.3499	.1972
423650	22.0298	22.8771	23.7244	24.5717	25.4190	26.2663	27.1136	27.9609	28.8082	29.6555	30.5028	31.3501	32.1974
653	.0300	.8773	.7246	.5719	.4192	.2665	.1138	.9611	.8084	.6557	.5030	.3503	.1976
656	.0301	.8774	.7247	.5720	.4194	.2667	.1140	.9613	.8086	.6559	.5032	.3505	.1979
659	.0303	.8776	.7249	.5722	.4195	.2669	.1142	.9615	.8088	.6561	.5034	.3508	.1981
662	.0304	.8777	.7251	.5724	.4197	.2670	.1144	.9617	.8090	.6563	.5037	.3510	.1983
423665	22.0306	22.8779	23.7252	24.5726	25.4199	26.2672	27.1146	27.9619	28.8092	29.6566	30.5039	31.3512	32.1985
668	.0307	.8781	.7254	.5727	.4201	.2674	.1148	.9621	.8094	.6568	.5041	.3514	.1988
671	.0309	.8782	.7256	.5729	.4203	.2676	.1149	.9623	.8096	.6570	.5043	.3517	.1990
674	.0310	.8784	.7257	.5731	.4204	.2678	.1151	.9625	.8098	.6572	.5045	.3519	.1992
677	.0312	.8786	.7259	.5733	.4206	.2680	.1153	.9627	.8100	.6574	.5047	.3521	.1995
423680	22.0314	22.8787	23.7261	24.5734	25.4208	26.2682	27.1155	27.9629	28.8102	29.6576	30.5050	31.3523	32.1997
683	.0315	.8789	.7262	.5736	.4210	.2683	.1157	.9631	.8104	.6578	.5052	.3525	.1999
686	.0317	.8790	.7264	.5738	.4212	.2685	.1159	.9633	.8106	.6580	.5054	.3528	.2001
689	.0318	.8792	.7266	.5740	.4213	.2687	.1161	.9635	.8109	.6582	.5056	.3530	.2004
692	.0320	.8794	.7268	.5741	.4215	.2689	.1163	.9637	.8111	.6584	.5058	.3532	.2006
423695	22.0321	22.8795	23.7269	24.5743	25.4217	26.2691	27.1165	27.9639	28.8113	29.6587	30.5060	31.3534	32.2008
698	.0323	.8797	.7271	.5745	.4219	.2693	.1167	.9641	.8115	.6589	.5063	.3537	.2010
701	.0325	.8799	.7273	.5747	.4221	.2695	.1169	.9643	.8117	.6591	.5065	.3539	.2013
704	.0326	.8800	.7274	.5749	.4222	.2696	.1171	.9645	.8119	.6593	.5067	.3541	.2015
707	.0328	.8802	.7276	.5750	.4224	.2698	.1172	.9647	.8121	.6595	.5069	.3543	.2017
423710	22.0329	22.8803	23.7278	24.5752	25.4226	26.2700	27.1174	27.9649	28.8123	29.6597	30.5071	31.3545	32.2020
713	.0331	.8805	.7279	.5754	.4228	.2702	.1176	.9651	.8125	.6599	.5073	.3548	.2022
716	.0332	.8807	.7281	.5755	.4230	.2704	.1178	.9653	.8127	.6601	.5076	.3550	.2024
719	.0334	.8808	.7283	.5757	.4231	.2706	.1180	.9655	.8129	.6603	.5078	.3552	.2026
722	.0335	.8810	.7284	.5759	.4233	.2708	.1182	.9657	.8131	.6605	.5080	.3554	.2029
423725	22.0337	22.8812	23.7286	24.5761	25.4235	26.2710	27.1184	27.9659	28.8133	29.6608	30.5082	31.3557	32.2031
728	.0339	.8813	.7288	.5762	.4237	.2711	.1186	.9660	.8135	.6610	.5084	.3559	.2033
731	.0340	.8815	.7289	.5764	.4239	.2713	.1188	.9662	.8137	.6612	.5086	.3561	.2036
734	.0342	.8816	.7291	.5766	.4240	.2715	.1190	.9664	.8139	.6614	.5088	.3563	.2038
737	.0343	.8818	.7293	.5767	.4242	.2717	.1192	.9666	.8141	.6616	.5091	.3565	.2040
423740	22.0345	22.8820	23.7294	24.5769	25.4244	26.2719	27.1194	27.9668	28.8143	29.6618	30.5093	31.3568	32.2042
743	.0346	.8821	.7296	.5771	.4246	.2721	.1196	.9670	.8145	.6620	.5095	.3570	.2045
746	.0348	.8823	.7298	.5773	.4248	.2723	.1197	.9672	.8147	.6622	.5097	.3572	.2047
749	.0349	.8824	.7299	.5774	.4249	.2724	.1199	.9674	.8149	.6624	.5099	.3574	.2049
752	.0351	.8826	.7301	.5776	.4251	.2726	.1201	.9676	.8151	.6626	.5101	.3576	.2052
423755	22.0353	22.8828	23.7303	24.5778	25.4253	26.2728	27.1203	27.9678	28.8153	29.6629	30.5104	31.3579	32.2054
758	.0354	.8829	.7304	.5780	.4255	.2730	.1205	.9680	.8155	.6631	.5106	.3581	.2056
761	.0356	.8831	.7306	.5781	.4257	.2732	.1207	.9682	.8157	.6633	.5108	.3583	.2058
764	.0357	.8833	.7308	.5783	.4258	.2734	.1209	.9684	.8160	.6635	.5110	.3585	.2061
767	.0359	.8834	.7310	.5785	.4260	.2736	.1211	.9686	.8162	.6637	.5112	.3588	.2063
423770	22.0360	22.8836	23.7311	24.5787	25.4262	26.2737	27.1213	27.9688	28.8164	29.6639	30.5114	31.3590	32.2065
773	.0362	.8837	.7313	.5788	.4264	.2739	.1215	.9690	.8166	.6641	.5117	.3592	.2067
776	.0364	.8839	.7315	.5790	.4266	.2741	.1217	.9692	.8168	.6643	.5119	.3594	.2070
779	.0365	.8841	.7316	.5792	.4267	.2743	.1219	.9694	.8170	.6645	.5121	.3596	.2072
782	.0367	.8842	.7318	.5794	.4269	.2745	.1220	.9696	.8172	.6647	.5123	.3599	.2074
423785	22.0368	22.8844	23.7320	24.5795	25.4271	26.2747	27.1222	27.9698	28.8174	29.6650	30.5125	31.3601	32.2077
788	.0370	.8846	.7321	.5797	.4273	.2749	.1224	.9700	.8176	.6652	.5127	.3603	.2079
791	.0371	.8847	.7323	.5799	.4275	.2750	.1226	.9702	.8178	.6654	.5130	.3605	.2081
794	.0373	.8849	.7325	.5801	.4276	.2752	.1228	.9704	.8180	.6656	.5132	.3608	.2083
797	.0374	.8850	.7326	.5802	.4278	.2754	.1230	.9706	.8182	.6658	.5134	.3610	.2086
423800	22.0376	22.8852	23.7328	24.5804	25.4280	26.2756	27.1232	27.9708	28.8184	29.6660	30.5136	31.3612	32.2088

MEGACYCLES PER SECOND

H A R M O N I C S

BASIC FREQ.	78	80	82	84	86	88	90	92	94	96	100	104	108
423500	33.0330	33.8800	34.7270	35.5740	36.4210	37.2680	38.1150	38.9620	39.8090	40.6560	42.3500	44.0440	45.7380
503	.0332	.8802	.7272	.5743	.4213	.2683	.1153	.9623	.8093	.6563	.3503	.0443	.7383
506	.0335	.8805	.7275	.5745	.4215	.2685	.1155	.9626	.8096	.6566	.3506	.0446	.7386
509	.0337	.8807	.7277	.5748	.4218	.2688	.1158	.9628	.8098	.6569	.3509	.0449	.7390
512	.0339	.8810	.7280	.5750	.4220	.2691	.1161	.9631	.8101	.6572	.3512	.0452	.7393
423515	33.0342	33.8812	34.7282	35.5753	36.4223	37.2693	38.1164	38.9634	39.8104	40.6574	42.3515	44.0456	45.7396
518	.0344	.8814	.7285	.5755	.4225	.2696	.1166	.9637	.8107	.6577	.3518	.0459	.7399
521	.0346	.8817	.7287	.5758	.4228	.2698	.1169	.9639	.8110	.6580	.3521	.0462	.7403
524	.0349	.8819	.7290	.5760	.4231	.2701	.1172	.9642	.8113	.6583	.3524	.0465	.7406
527	.0351	.8822	.7292	.5763	.4233	.2704	.1174	.9645	.8115	.6586	.3527	.0468	.7409
423530	33.0353	33.8824	34.7295	35.5765	36.4236	37.2706	38.1177	38.9648	39.8118	40.6589	42.3530	44.0471	45.7412
533	.0356	.8826	.7297	.5768	.4238	.2709	.1180	.9650	.8121	.6592	.3533	.0474	.7416
536	.0358	.8829	.7300	.5770	.4241	.2712	.1182	.9653	.8124	.6595	.3536	.0477	.7419
539	.0360	.8831	.7302	.5773	.4244	.2714	.1185	.9656	.8127	.6597	.3539	.0481	.7422
542	.0363	.8834	.7304	.5775	.4246	.2717	.1188	.9659	.8129	.6600	.3542	.0484	.7425
423545	33.0365	33.8836	34.7307	35.5778	36.4249	37.2720	38.1191	38.9661	39.8132	40.6603	42.3545	44.0487	45.7429
548	.0367	.8838	.7309	.5780	.4251	.2722	.1193	.9664	.8135	.6606	.3548	.0490	.7432
551	.0370	.8841	.7312	.5783	.4254	.2725	.1196	.9667	.8138	.6609	.3551	.0493	.7435
554	.0372	.8843	.7314	.5785	.4256	.2728	.1199	.9670	.8141	.6612	.3554	.0496	.7438
557	.0374	.8846	.7317	.5788	.4259	.2730	.1201	.9672	.8144	.6615	.3557	.0499	.7442
423560	33.0377	33.8848	34.7319	35.5790	36.4262	37.2733	38.1204	38.9675	39.8146	40.6618	42.3560	44.0502	45.7445
563	.0379	.8850	.7322	.5793	.4264	.2735	.1207	.9678	.8149	.6620	.3563	.0506	.7448
566	.0381	.8853	.7324	.5795	.4267	.2738	.1209	.9681	.8152	.6623	.3566	.0509	.7451
569	.0384	.8855	.7327	.5798	.4269	.2741	.1212	.9683	.8155	.6626	.3569	.0512	.7455
572	.0386	.8858	.7329	.5800	.4272	.2743	.1215	.9686	.8158	.6629	.3572	.0515	.7458
423575	33.0389	33.8860	34.7332	35.5803	36.4275	37.2746	38.1218	38.9689	39.8161	40.6632	42.3575	44.0518	45 7461
578	.0391	.8862	.7334	.5806	.4277	.2749	.1220	.9692	.8163	.6635	.3578	.0521	.7464
581	.0393	.8865	.7336	.5808	.4280	.2751	.1223	.9695	.8166	.6638	.3581	.0524	.7467
584	.0396	.8867	.7339	.5811	.4282	.2754	.1226	.9697	.8169	.6641	.3584	.0527	.7471
587	.0398	.8870	.7341	.5813	.4285	.2757	.1228	.9700	.8172	.6644	.3587	.0530	.7474
423590	33.0400	33.8872	34.7344	35.5816	36.4287	37.2759	38.1231	38.9703	39.8175	40.6646	42.3590	44.0534	45.7477
593	.0403	.8874	.7346	.5818	.4290	.2762	.1234	.9706	.8177	.6649	.3593	.0537	.7480
596	.0405	.8877	.7349	.5821	.4293	.2764	.1236	.9708	.8180	.6652	.3596	.0540	.7484
599	.0407	.8879	.7351	.5823	.4295	.2767	.1239	.9711	.8183	.6655	.3599	.0543	.7487
602	.0410	.8882	.7354	.5826	.4298	.2770	.1242	.9714	.8186	.6658	.3602	.0546	.7490
423605	33.0412	33.8884	34.7356	35.5828	36.4300	37.2772	38.1245	38.9717	39.8189	40.6661	42.3605	44.0549	45.7493
608	.0414	.8886	.7359	.5831	.4303	.2775	.1247	.9719	.8192	.6664	.3608	.0552	.7497
611	.0417	.8889	.7361	.5833	.4305	.2778	.1250	.9722	.8194	.6667	.3611	.0555	.7500
614	.0419	.8891	.7363	.5836	.4308	.2780	.1253	.9725	.8197	.6669	.3614	.0559	.7503
617	.0421	.8894	.7366	.5838	.4311	.2783	.1255	.9728	.8200	.6672	.3617	.0562	.7506
423620	33.0424	33.8896	34.7368	35.5841	36.4313	37.2786	38.1258	38.9730	39.8203	40.6675	42.3620	44.0565	45.7510
623	.0426	.8898	.7371	.5843	.4316	.2788	.1261	.9733	.8206	.6678	.3623	.0568	.7513
626	.0428	.8901	.7373	.5846	.4318	.2791	.1263	.9736	.8208	.6681	.3626	.0571	.7516
629	.0431	.8903	.7376	.5848	.4321	.2794	.1266	.9739	.8211	.6684	.3629	.0574	.7519
632	.0433	.8906	.7378	.5851	.4324	.2796	.1269	.9741	.8214	.6687	.3632	.0577	.7523
423635	33.0435	33.8908	34.7381	35.5853	36.4326	37.2799	38.1272	38.9744	39.8217	40.6690	42.3635	44.0580	45.7526
638	.0438	.8910	.7383	.5856	.4329	.2801	.1274	.9747	.8220	.6692	.3638	.0584	.7529
641	.0440	.8913	.7386	.5858	.4331	.2804	.1277	.9750	.8223	.6695	.3641	.0587	.7532
644	.0442	.8915	.7388	.5861	.4334	.2807	.1280	.9752	.8225	.6698	.3644	.0590	.7536
647	.0445	.8918	.7391	.5863	.4336	.2809	.1282	.9755	.8228	.6701	.3647	.0593	.7539
423650	33.0447	33.8920	34.7393	35.5866	36.4339	37.2812	38.1285	38.9758	39.8231	40.6704	42.3650	44.0596	45.7542
653	.0449	.8922	.7395	.5869	.4342	.2815	.1288	.9761	.8234	.6707	.3653	.0599	.7545
656	.0452	.8925	.7398	.5871	.4344	.2817	.1290	.9764	.8237	.6710	.3656	.0602	.7548
659	.0454	.8927	.7400	.5874	.4347	.2820	.1293	.9766	.8239	.6713	.3659	.0605	.7552
662	.0456	.8930	.7403	.5876	.4349	.2823	.1296	.9769	.8242	.6716	.3662	.0608	.7555
423665	33.0459	33.8932	34.7405	35.5879	36.4352	37.2825	38.1299	38.9772	39.8245	40.6718	42.3665	44.0612	45.7558
668	.0461	.8934	.7408	.5881	.4354	.2828	.1301	.9775	.8248	.6721	.3668	.0615	.7561
671	.0463	.8937	.7410	.5884	.4357	.2830	.1304	.9777	.8251	.6724	.3671	.0618	.7565
674	.0466	.8939	.7413	.5886	.4360	.2833	.1307	.9780	.8254	.6727	.3674	.0621	.7568
677	.0468	.8942	.7415	.5889	.4362	.2836	.1309	.9783	.8256	.6730	.3677	.0624	.7571
423680	33.0470	33.8944	34.7418	35.5891	36.4365	37.2838	38.1312	38.9786	39.8259	40.6733	42.3680	44.0627	45.7574
683	.0473	.8946	.7420	.5894	.4367	.2841	.1315	.9788	.8262	.6736	.3683	.0630	.7578
686	.0475	.8949	.7423	.5896	.4370	.2844	.1317	.9791	.8265	.6739	.3686	.0633	.7581
689	.0477	.8951	.7425	.5899	.4373	.2846	.1320	.9794	.8268	.6741	.3689	.0637	.7584
692	.0480	.8954	.7427	.5901	.4375	.2849	.1323	.9797	.8270	.6744	.3692	.0640	.7587
423695	33.0482	33.8956	34.7430	35.5904	36.4378	37.2852	38.1326	38.9799	39.8273	40.6747	42.3695	44.0643	45.7591
698	.0484	.8958	.7432	.5906	.4380	.2854	.1328	.9802	.8276	.6750	.3698	.0646	.7594
701	.0487	.8961	.7435	.5909	.4383	.2857	.1331	.9805	.8279	.6753	.3701	.0649	.7597
704	.0489	.8963	.7437	.5911	.4385	.2860	.1334	.9808	.8282	.6756	.3704	.0652	.7600
707	.0491	.8966	.7440	.5914	.4388	.2862	.1336	.9810	.8285	.6759	.3707	.0655	.7604
423710	33.0494	33.8968	34.7442	35.5916	36.4391	37.2865	38.1339	38.9813	39.8287	40.6762	42.3710	44.0658	45.7607
713	.0496	.8970	.7445	.5919	.4393	.2867	.1342	.9816	.8290	.6764	.3713	.0662	.7610
716	.0498	.8973	.7447	.5921	.4396	.2870	.1344	.9819	.8293	.6767	.3716	.0665	.7613
719	.0501	.8975	.7450	.5924	.4398	.2873	.1347	.9821	.8296	.6770	.3719	.0668	.7617
722	.0503	.8978	.7452	.5926	.4401	.2875	.1350	.9824	.8299	.6773	.3722	.0671	.7620
423725	33.0506	33.8980	34.7455	35.5929	36.4404	37.2878	38.1353	38.9827	39.8302	40.6776	42.3725	44.0674	45.7623
728	.0508	.8982	.7457	.5932	.4406	.2881	.1355	.9830	.8304	.6779	.3728	.0677	.7626
731	.0510	.8985	.7459	.5934	.4409	.2883	.1358	.9833	.8307	.6782	.3731	.0680	.7629
734	.0513	.8987	.7462	.5937	.4411	.2886	.1361	.9835	.8310	.6785	.3734	.0683	.7633
737	.0515	.8990	.7464	.5939	.4414	.2889	.1363	.9838	.8313	.6788	.3737	.0686	.7636
423740	33.0517	33.8992	34.7467	35.5942	36.4416	37.2891	38.1366	38.9841	39.8316	40.6790	42.3740	44.0690	45.7639
743	.0520	.8994	.7469	.5944	.4419	.2894	.1369	.9844	.8318	.6793	.3743	.0693	.7642
746	.0522	.8997	.7472	.5947	.4422	.2896	.1371	.9846	.8321	.6796	.3746	.0696	.7646
749	.0524	.8999	.7474	.5949	.4424	.2899	.1374	.9849	.8324	.6799	.3749	.0699	.7649
752	.0527	.9002	.7477	.5952	.4427	.2902	.1377	.9852	.8327	.6802	.3752	.0702	.7652
423755	33.0529	33.9004	34.7479	35.5954	36.4429	37.2904	38.1380	38.9855	39.8330	40.6805	42.3755	44.0705	45.7655
758	.0531	.9006	.7482	.5957	.4432	.2907	.1382	.9857	.8333	.6808	.2358	.0708	.7659
761	.0534	.9009	.7484	.5959	.4434	.2910	.1385	.9860	.8335	.6811	.3761	.0711	.7662
764	.0536	.9011	.7486	.5962	.4437	.2912	.1388	.9863	.8338	.6813	.3764	.0715	.7665
767	.0538	.9014	.7489	.5964	.4440	.2915	.1390	.9866	.8341	.6816	.3767	.0718	.7668
423770	33.0541	33.9016	34.7491	35.5967	36.4442	37.2918	38.1393	38.9868	39.8344	40.6819	42.3770	44.0721	45.7672
773	.0543	.9018	.7494	.5969	.4445	.2920	.1396	.9871	.8347	.6822	.3773	.0724	.7675
776	.0545	.9021	.7496	.5972	.4447	.2923	.1398	.9874	.8349	.6825	.3776	.0727	.7678
779	.0548	.9023	.7499	.5974	.4450	.2926	.1401	.9877	.8352	.6828	.3779	.0730	.7681
782	.0550	.9026	.7501	.5977	.4453	.2928	.1404	.9879	.8355	.6831	.3782	.0733	.7685
423785	33.0552	33.9028	34.7504	35.5979	36.4455	37.2931	38.1407	38.9882	39.8358	40.6834	42.3785	44.0736	45.7688
788	.0555	.9030	.7506	.5982	.4458	.2933	.1409	.9885	.8361	.6836	.3788	.0740	.7691
791	.0557	.9033	.7509	.5984	.4460	.2936	.1412	.9888	.8364	.6839	.3791	.0743	.7694
794	.0559	.9035	.7511	.5987	.4463	.2939	.1415	.9890	.8366	.6842	.3794	.0746	.7698
797	.0562	.9038	.7514	.5989	.4465	.2941	.1417	.9893	.8369	.6845	.3797	.0749	.7701
423800	33.0564	33.9040	34.7516	35.5992	36.4468	37.2944	38.1420	38.9896	39.8372	40.6848	42.3800	44.0752	45.7704

MEGACYCLES PER SECOND

HARMONICS

BASIC FREQ.	52	54	56	58	60	62	64	66	68	70	72	74	76
423800	22.0376	22.8852	23.7328	24.5804	25.4280	26.2756	27.1232	27.9708	28.8184	29.6660	30.5136	31.3612	32.2088
803	.0378	.8854	.7330	.5806	.4282	.2758	.1234	.9710	.8186	.6662	.5138	.3614	.2090
806	.0379	.8855	.7331	.5807	.4284	.2760	.1236	.9712	.8188	.6664	.5140	.3616	.2093
809	.0381	.8857	.7333	.5809	.4285	.2762	.1238	.9714	.8190	.6666	.5142	.3619	.2095
812	.0382	.8858	.7335	.5811	.4287	.2763	.1240	.9716	.8192	.6668	.5145	.3621	.2097
423815	22.0384	22.8860	23.7336	24.5813	25.4289	26.2765	27.1242	27.9718	28.8194	29.6671	30.5147	31.3623	32.2099
818	.0385	.8862	.7338	.5814	.4291	.2767	.1244	.9720	.8196	.6673	.5149	.3625	.2102
821	.0387	.8863	.7340	.5816	.4293	.2769	.1245	.9722	.8198	.6675	.5151	.3628	.2104
824	.0388	.8865	.7341	.5818	.4294	.2771	.1247	.9724	.8200	.6677	.5153	.3630	.2106
827	.0390	.8867	.7343	.5820	.4296	.2773	.1249	.9726	.8202	.6679	.5155	.3632	.2109
423830	22.0392	22.8868	23.7345	24.5821	25.4298	26.2775	27.1251	27.9728	28.8204	29.6681	30.5158	31.3634	32.2111
833	.0393	.8870	.7346	.5823	.4300	.2776	.1253	.9730	.8206	.6683	.5160	.3636	.2113
836	.0395	.8871	.7348	.5825	.4302	.2778	.1255	.9732	.8208	.6685	.5162	.3639	.2115
839	.0396	.8873	.7350	.5827	.4303	.2780	.1257	.9734	.8211	.6687	.5164	.3641	.2118
842	.0398	.8875	.7352	.5828	.4305	.2782	.1259	.9736	.8213	.6689	.5166	.3643	.2120
423845	22.0399	22.8876	23.7353	24.5830	25.4307	26.2784	27.1261	27.9738	28.8215	29.6692	30.5168	31.3645	32.2122
848	.0401	.8878	.7355	.5832	.4309	.2786	.1263	.9740	.8217	.6694	.5171	.3648	.2124
851	.0403	.8880	.7357	.5834	.4311	.2788	.1265	.9742	.8219	.6696	.5173	.3650	.2127
854	.0404	.8881	.7358	.5835	.4312	.2789	.1267	.9744	.8221	.6698	.5175	.3652	.2129
857	.0406	.8883	.7360	.5837	.4314	.2791	.1268	.9746	.8223	.6700	.5177	.3654	.2131
423860	22.0407	22.8884	23.7362	24.5839	25.4316	26.2793	27.1270	27.9748	28.8225	29.6702	30.5179	31.3656	32.2134
863	.0409	.8886	.7363	.5841	.4318	.2795	.1272	.9750	.8227	.6704	.5181	.3659	.2136
866	.0410	.8888	.7365	.5842	.4320	.2797	.1274	.9752	.8229	.6706	.5184	.3661	.2138
869	.0412	.8889	.7367	.5844	.4321	.2799	.1276	.9754	.8231	.6708	.5186	.3663	.2140
872	.0413	.8891	.7368	.5846	.4323	.2801	.1278	.9756	.8233	.6710	.5188	.3665	.2143
423875	22.0415	22.8893	23.7370	24.5848	25.4325	26.2803	27.1280	27.9758	28.8235	29.6713	30.5190	31.3668	32.2145
878	.0417	.8894	.7372	.5849	.4327	.2804	.1282	.9759	.8237	.6715	.5192	.3670	.2147
881	.0418	.8896	.7373	.5851	.4329	.2806	.1284	.9761	.8239	.6717	.5194	.3672	.2150
884	.0420	.8897	.7375	.5853	.4330	.2808	.1286	.9763	.8241	.6719	.5196	.3674	.2152
887	.0421	.8899	.7377	.5854	.4332	.2810	.1288	.9765	.8243	.6721	.5199	.3676	.2154
423890	22.0423	22.8901	23.7378	24.5856	25.4334	26.2812	27.1290	27.9767	28.8245	29.6723	30.5201	31.3679	32.2156
893	.0424	.8902	.7380	.5858	.4336	.2814	.1292	.9769	.8247	.6725	.5203	.3681	.2159
896	.0426	.8904	.7382	.5860	.4338	.2816	.1293	.9771	.8249	.6727	.5205	.3683	.2161
899	.0427	.8905	.7383	.5861	.4339	.2817	.1295	.9773	.8251	.6729	.5207	.3685	.2163
902	.0429	.8907	.7385	.5863	.4341	.2819	.1297	.9775	.8253	.6731	.5209	.3687	.2166
423905	22.0431	22.8909	23.7387	24.5865	25.4343	26.2821	27.1299	27.9777	28.8255	29.6734	30.5212	31.3690	32.2168
908	.0432	.8910	.7388	.5867	.4345	.2823	.1301	.9779	.8257	.6736	.5214	.3692	.2170
911	.0434	.8912	.7390	.5868	.4347	.2825	.1303	.9781	.8259	.6738	.5216	.3694	.2172
914	.0435	.8914	.7392	.5870	.4348	.2827	.1305	.9783	.8262	.6740	.5218	.3696	.2175
917	.0437	.8915	.7394	.5872	.4350	.2829	.1307	.9785	.8264	.6742	.5220	.3699	.2177
423920	22.0438	22.8917	23.7395	24.5874	25.4352	26.2830	27.1309	27.9787	28.8266	29.6744	30.5222	31.3701	32.2179
923	.0440	.8918	.7397	.5875	.4354	.2832	.1311	.9789	.8268	.6746	.5225	.3703	.2181
926	.0442	.8920	.7399	.5877	.4356	.2834	.1313	.9791	.8270	.6748	.5227	.3705	.2184
929	.0443	.8922	.7400	.5879	.4357	.2836	.1315	.9793	.8272	.6750	.5229	.3707	.2186
932	.0445	.8923	.7402	.5881	.4359	.2838	.1316	.9795	.8274	.6752	.5231	.3710	.2188
423935	22.0446	22.8925	23.7404	24.5882	25.4361	26.2840	27.1318	27.9797	28.8276	29.6755	30.5233	31.3712	32.2191
938	.0448	.8927	.7405	.5884	.4363	.2842	.1320	.9799	.8278	.6757	.5235	.3714	.2193
941	.0449	.8928	.7407	.5886	.4365	.2843	.1322	.9801	.8280	.6759	.5238	.3716	.2195
944	.0451	.8930	.7409	.5888	.4366	.2845	.1324	.9803	.8282	.6761	.5240	.3719	.2197
947	.0452	.8931	.7410	.5889	.4368	.2847	.1326	.9805	.8284	.6763	.5242	.3721	.2200
423950	22.0454	22.8933	23.7412	24.5891	25.4370	26.2849	27.1328	27.9807	28.8286	29.6765	30.5244	31.3723	32.2202
953	.0456	.8935	.7414	.5893	.4372	.2851	.1330	.9809	.8288	.6767	.5246	.3725	.2204
956	.0457	.8936	.7415	.5894	.4374	.2853	.1332	.9811	.8290	.6769	.5248	.3727	.2207
959	.0459	.8938	.7417	.5896	.4375	.2855	.1334	.9813	.8292	.6771	.5250	.3730	.2209
962	.0460	.8939	.7419	.5898	.4377	.2856	.1336	.9815	.8294	.6773	.5253	.3732	.2211
423965	22.0462	22.8941	23.7420	24.5900	25.4379	26.2858	27.1338	27.9817	28.8296	29.6776	30.5255	31.3734	32.2213
968	.0463	.8943	.7422	.5901	.4381	.2860	.1340	.9819	.8298	.6778	.5257	.3736	.2216
971	.0465	.8944	.7424	.5903	.4383	.2862	.1341	.9821	.8300	.6780	.5259	.3739	.2218
974	.0466	.8946	.7425	.5905	.4384	.2864	.1343	.9823	.8302	.6782	.5261	.3741	.2220
977	.0468	.8948	.7427	.5907	.4386	.2866	.1345	.9825	.8304	.6784	.5263	.3743	.2223
443980	22.0470	22.8949	23.7429	24.5908	25.4388	26.2868	27.1347	27.9827	28.8306	29.6786	30.5266	31.3745	32.2225
983	.0471	.8951	.7430	.5910	.4390	.2869	.1349	.9829	.8308	.6788	.5268	.3747	.2227
986	.0473	.8952	.7432	.5912	.4392	.2871	.1351	.9831	.8310	.6790	.5270	.3750	.2229
989	.0474	.8954	.7434	.5914	.4393	.2873	.1353	.9833	.8313	.6792	.5272	.3752	.2232
992	.0476	.8956	.7436	.5915	.4395	.2875	.1355	.9835	.8315	.6794	.5274	.3754	.2234
423995	22.0477	22.8957	23.7437	24.5917	25.4397	26.2877	27.1357	27.9837	28.8317	29.6797	30.5276	31.3756	32.2236
998	.0479	.8959	.7439	.5919	.4399	.2879	.1359	.9839	.8319	.6799	.5279	.3759	.2238
424001	.0481	.8961	.7441	.5921	.4401	.2881	.1361	.9841	.8321	.6801	.5281	.3761	.2241
004	.0482	.8962	.7442	.5922	.4402	.2882	.1363	.9843	.8323	.6803	.5283	.3763	.2243
007	.0484	.8964	.7444	.5924	.4404	.2884	.1364	.9845	.8325	.6805	.5285	.3765	.2245
424010	22.0485	22.8965	23.7446	24.5926	25.4406	26.2886	27.1366	27.9847	28.8327	29.6807	30.5287	31.3767	32.2248
013	.0487	.8967	.7447	.5928	.4408	.2888	.1368	.9849	.8329	.6809	.5289	.3770	.2250
016	.0488	.8969	.7449	.5929	.4410	.2890	.1370	.9851	.8331	.6811	.5292	.3772	.2252
019	.0490	.8970	.7451	.5931	.4411	.2892	.1372	.9853	.8333	.6813	.5294	.2774	.2254
022	.0491	.8972	.7452	.5933	.4413	.2894	.1374	.9855	.8335	.6815	.5296	.3776	.2257
424025	22.0493	22.8974	23.7454	24.5935	25.4415	26.2896	27.1376	27.9857	28.8337	29.6818	30.5298	31.3779	32.2259
028	.0495	.8975	.7456	.5936	.4417	.2897	.1378	.9858	.8339	.6820	.5300	.3781	.2261
031	.0496	.8977	.7457	.5938	.4419	.2899	.1380	.9860	.8341	.6822	.5302	.3783	.2264
034	.0498	.8978	.7459	.5940	.4420	.2901	.1382	.9862	.8343	.6824	.5304	.3785	.2266
037	.0499	.8980	.7461	.5941	.4422	.2903	.1384	.9864	.8345	.6826	.5307	.3787	.2268
424040	22.0501	22.8982	23.7462	24.5943	25.4424	26.2905	27.1386	27.9866	28.8347	29.6828	30.5309	31.3790	32.2270
043	.0502	.8983	.7464	.5945	.4426	.2907	.1388	.9868	.8349	.6830	.5311	.3792	.2273
046	.0504	.8985	.7466	.5947	.4428	.2909	.1389	.9870	.8351	.6832	.5313	.3794	.2275
049	.0505	.8986	.7467	.5948	.4429	.2910	.1391	.9872	.8353	.6834	.5315	.3796	.2277
052	.0507	.8988	.7469	.5950	.4431	.2912	.1393	.9874	.8355	.6836	.5317	.3798	.2280
424055	22.0509	22.8990	23.7471	24.5952	25.4433	26.2914	27.1395	27.9876	28.8357	29.6839	30.5320	31.3801	32.2282
058	.0510	.8991	.7472	.5954	.4435	.2916	.1397	.9878	.8359	.6841	.5322	.3803	.2284
061	.0512	.8993	.7474	.5955	.4437	.2918	.1399	.9880	.8361	.6843	.5324	.3805	.2286
064	.0513	.8995	.7476	.5957	.4438	.2920	.1401	.9882	.8364	.6845	.5326	.3807	.2289
067	.0515	.8996	.7478	.5959	.4440	.2922	.1403	.9884	.8366	.6847	.5328	.3810	.2291
424070	22.0516	22.8998	23.7479	24.5961	25.4442	26.2923	27.1405	27.9886	28.8368	29.6849	30.5330	31.3812	32.2293
073	.0518	.8999	.7481	.5962	.4444	.2925	.1407	.9888	.8370	.6851	.5333	.3814	.2295
076	.0520	.9001	.7483	.5964	.4446	.2927	.1409	.9890	.8372	.6853	.5335	.3816	.2298
079	.0521	.9003	.7484	.5966	.4447	.2929	.1411	.9892	.8374	.6855	.5337	.3818	.2300
082	.0523	.9004	.7486	.5968	.4449	.2931	.1412	.9894	.8376	.6857	.5339	.3821	.2302
424085	22.0524	22.9006	23.7488	24.5969	25.4451	26.2933	27.1414	27.9896	28.8378	29.6860	30.5341	31.3823	32.2305
088	.0526	.9008	.7489	.5971	.4453	.2935	.1416	.9898	.8380	.6862	.5343	.3825	.2307
091	.0527	.9009	.7491	.5973	.4455	.2936	.1418	.9900	.8382	.6864	.5346	.3827	.2309
094	.0529	.9011	.7493	.5975	.4456	.2938	.1420	.9902	.8384	.6866	.5348	.3830	.2311
097	.0530	.9012	.7494	.5976	.4458	.2940	.1422	.9904	.8386	.6868	.5350	.3832	.2314
424100	22.0532	22.9014	23.7496	24.5978	25.4460	26.2942	27.1424	27.9906	28.8388	29.6870	30.5352	31.3834	32.2316

MEGACYCLES PER SECOND

H A R M O N I C S

BASIC FREQ.	78	80	82	84	86	88	90	92	94	96	100	104	108
423800	33.0564	33.9040	34.7516	35.5992	36.4468	37.2944	38.1420	38.9896	39.8372	40.6848	42.3800	44.0752	45.7704
803	.0566	.9042	.7518	.5995	.4471	.2947	.1423	.9899	.8375	.6851	.3803	.0755	.7707
806	.0569	.9045	.7521	.5997	.4473	.2949	.1425	.9902	.8378	.6854	.3806	.0758	.7710
809	.0571	.9047	.7523	.6000	.4476	.2952	.1428	.9904	.8380	.6857	.3809	.0761	.7714
812	.0573	.9050	.7526	.6002	.4478	.2955	.1431	.9907	.8383	.6860	.3812	.0764	.7717
423815	33.0576	33.9052	34.7528	35.6005	36.4481	37.2957	38.1434	38.9910	39.8386	40.6862	42.3815	44.0768	45.7720
818	.0578	.9054	.7531	.6007	.4483	.2960	.1436	.9913	.8389	.6865	.3818	.0771	.7723
821	.0580	.9057	.7533	.6010	.4486	.2962	.1439	.9915	.8392	.6868	.3821	.0774	.7727
824	.0583	.9059	.7536	.6012	.4489	.2965	.1442	.9918	.8395	.6871	.3824	.0777	.7730
827	.0585	.9062	.7538	.6015	.4491	.2968	.1444	.9921	.8397	.6874	.3827	.0780	.7733
423830	33.0587	33.9064	34.7541	35.6017	36.4494	37.2970	38.1447	38.9924	39.8400	40.6877	42.3830	44.0783	45.7736
833	.0590	.9066	.7543	.6020	.4496	.2973	.1450	.9926	.8403	.6880	.3833	.0786	.7740
836	.0592	.9069	.7546	.6022	.4499	.2976	.1452	.9929	.8406	.6883	.3836	.0789	.7743
899	.0594	.9071	.7548	.6025	.4502	.2978	.1455	.9932	.8409	.6885	.3839	.0793	.7746
842	.0597	.9074	.7550	.6027	.4504	.2981	.1458	.9935	.8411	.6888	.3842	.0796	.7749
423845	33.0599	33.9076	34.7553	35.6030	36.4507	37.2984	38.1461	38.9937	39:8414	40.6891	42.3845	44.0799	45.7753
848	.0601	.9078	.7555	.6032	.4509	.2986	.1463	.9940	.8417	.6894	.3848	.0802	.7756
851	.0604	.9081	.7558	.6035	.4512	.2989	.1466	.9943	.8420	.6897	.3851	.0805	.7759
854	.0606	.9083	.7560	.6037	.4514	.2992	.1469	.9946	.8423	.6900	.3854	.0808	.7762
857	.0608	.9086	.7563	.6040	.4517	.2994	.1471	.9948	.8426	.6903	.3857	.0811	.7766
423860	33.0611	33.9088	34.7565	35.6042	36.4520	37.2997	38.1474	38.9951	39.8428	40.6906	42.3860	44.0814	45.7769
863	.0613	.9090	.7568	.6045	.4522	.2999	.1477	.9954	.8431	.6908	.3863	.0818	.7772
866	.0615	.9093	.7570	.6047	.4525	.3002	.1479	.9957	.8434	.6911	.3866	.0821	.7775
869	.0618	.9095	.7573	.6050	.4527	.3005	.1482	.9959	.8437	.6914	.3869	.0824	.7779
872	.0620	.9098	.7575	.6052	.4530	.3007	.1485	.9962	.8440	.6917	.3872	.0827	.7782
423875	33.0623	33.9100	34.7578	35.6055	36.4533	37.3010	38.1488	38.9965	39.8443	40.6920	42.3875	44.0830	45.7785
878	.0625	.9102	.7580	.6058	.4535	.3013	.1490	.9968	.8445	.6923	.3878	.0833	.7788
881	.0627	.9105	.7582	.6060	.4538	.3015	.1493	.9971	.8448	.6926	.3881	.0836	.7791
884	.0630	.9107	.7585	.6063	.4540	.3018	.1496	.9973	.8451	.6929	.3884	.0839	.7795
887	.0632	.9110	.7587	.6065	.4543	.3021	.1498	.9976	.8454	.6932	.3887	.0842	.7798
423890	33.0634	33.9112	34.7590	35.6068	36.4545	37.3023	38.1501	38.9979	39.8457	40.6934	42.3890	44.0846	45.7801
893	.0637	.9114	.7592	.6070	.4548	.3026	.1504	.9982	.8459	.6937	.3893	.0849	.7804
896	.0639	.9117	.7595	.6073	.4551	.3028	.1506	.9984	.8462	.6940	.3896	.0852	.7808
899	.0641	.9119	.7597	.6075	.4553	.3031	.1509	.9987	.8465	.6943	.3899	.0855	.7811
902	.0644	.9122	.7600	.6078	.4556	.3034	.1512	.9990	.8468	.6946	.3902	.0858	.7814
423905	33.0646	33.9124	34.7602	35.6080	36.4558	37.3036	38.1515	38.9993	39.8471	40.6949	42.3905	44.0861	45.7817
908	.0648	.9126	.7605	.6083	.4561	.3039	.1517	.9995	.8474	.6952	.3908	.0864	.7821
911	.0651	.9129	.7607	.6085	.4563	.3042	.1520	.9998	.8476	.6955	.3911	.0867	.7824
914	.0653	.9131	.7609	.6038	.4566	.3044	.1523	39.0001	.8479	.6957	.3914	.0871	.7827
917	.0655	.9134	.7612	.6090	.4569	.3047	.1525	.0004	.8482	.6960	.3917	.0874	.7830
423920	33.0658	33.9136	34.7614	35.6093	36.4571	37.3050	38.1528	39.0006	39.8485	40.6963	42.3920	44.0877	45.7834
923	.0660	.9138	.7617	.6095	.4574	.3052	.1531	.0009	.8488	.6966	.3923	.0880	.7837
926	.0662	.9141	.7619	.6098	.4576	.3055	.1533	.0012	.8490	.6969	.3926	.0883	.7840
929	.0665	.9143	.7622	.6100	.4579	.3058	.1536	.0015	.8493	.6972	.3929	.0886	.7843
932	.0667	.9146	.7624	.6103	.4582	.3060	.1539	.0017	.8496	.6975	.3932	.0889	.7847
423935	33.0669	33.9148	34.7627	35.6105	36.4584	37.3063	38.1542	39.0020	39.8499	40.6978	42.3935	44.0892	45.7850
938	.0672	.9150	.7629	.6108	.4587	.3065	.1544	.0023	.8502	.6980	.3938	.0896	.7853
941	.0674	.9153	.7632	.6110	.4589	.3068	.1547	.0026	.8505	.6983	.3941	.0899	.7856
944	.0676	.9155	.7634	.6113	.4592	.3071	.1550	.0028	.8507	.6986	.3944	.0902	.7860
947	.0679	.9158	.7637	.6115	.4594	.3073	.1552	.0031	.8510	.6989	.3947	.0905	.7863
423950	33.0681	33.9160	34.7639	35.6118	36.4597	37.3076	38.1555	39.0034	39.8513	40.6992	42.3950	44.0908	45.7866
953	.0683	.9162	.7641	.6121	.4600	.3079	.1558	.0037	.8516	.6995	.3953	.0911	.7869
956	.0686	.9165	.7644	.6123	.4602	.3081	.1560	.0040	.8519	.6998	.3956	.0914	.7872
959	.0688	.9167	.7646	.6126	.4605	.3084	.1563	.0042	.8521	.7001	.3959	.0917	.7876
962	.0690	.9170	.7649	.6128	.4607	.3087	.1566	.0045	.8524	.7004	.3962	.0920	.7879
423965	33.0693	33.9172	34.7651	35.6131	36.4610	37.3089	38.1569	39.0048	39.8527	40.7006	42.3965	44.0924	45.7882
968	.0695	.9174	.7654	.6133	.4612	.3092	.1571	.0051	.8530	.7009	.3968	.0927	.7885
971	.0697	.9177	.7656	.6136	.4615	.3094	.1574	.0053	.8533	.7012	.3971	.0930	.7889
974	.0700	.9179	.7659	.6138	.4618	.3097	.1577	.0056	.8536	.7015	.3974	.0933	.7892
977	.0702	.9182	.7661	.6141	.4620	.3100	.1579	.0059	.8538	.7018	.3977	.0936	.7895
423980	33.0704	33.9184	34.7664	35.6143	36.4623	37.3102	38.1582	39.0062	39.8541	40.7021	42.3980	44.0939	45.7898
983	.0707	.9186	.7666	.6146	.4625	.3105	.1585	.0064	.8544	.7024	.3983	.0942	.7902
986	.0709	.9189	.7669	.6148	.4628	.3108	.1587	.0067	.8547	.7027	.3986	.0945	.7905
989	.0711	.9191	.7671	.6151	.4631	.3110	.1590	.0070	.8550	.7029	.3989	.0949	.7908
992	.0714	.9194	.7673	.6153	.4633	.3113	.1593	.0073	.8552	.7032	.3992	.0952	.7911
423995	33.0716	33.9196	34.7676	35.6156	36.4636	37.3116	38.1596	39.0075	39.8555	40.7035	42.3995	44.0955	45.7915
998	.0718	.9198	.7678	.6158	.4638	.3118	.1598	.0078	.8558	.7038	.3998	.0958	.7918
424001	.0721	.9201	.7681	.6161	.4641	.3121	.1601	.0081	.8561	.7041	.4001	.0961	.7921
004	.0723	.9203	.7683	.6163	.4643	.3124	.1604	.0084	.8564	.7044	.4004	.0964	.7924
007	.0725	.9206	.7686	.6166	.4646	.3126	.1606	.0086	.8567	.7047	.4007	.0967	.7928
424010	33.0728	33.9208	34.7688	35.6168	36.4649	37.3129	38.1609	39.0089	39.8569	40.7050	42.4010	44.0970	45.7931
013	.0730	.9210	.7691	.6171	.4651	.3131	.1612	.0092	.8572	.7052	.4013	.0974	.7934
016	.0732	.9213	.7693	.6173	.4654	.3134	.1614	.0095	.8575	.7055	.4016	.0977	.7937
019	.0735	.9215	.7696	.6176	.4656	.3137	.1617	.0097	.8578	.7058	.4019	.0980	.7941
022	.0737	.9218	.7698	.6178	.4659	.3139	.1620	.0100	.8581	.7061	.4022	.0983	.7944
424025	33.0740	33.9220	34.7701	35.6181	36.4662	37.3142	38.1623	39.0103	39.8584	40.7064	42.4025	44.0986	45.7947
028	.0742	.9222	.7703	.6184	.4664	.3145	.1625	.0106	.8586	.7067	.4028	.0989	.7950
031	.0744	.9225	.7705	.6186	.4667	.3147	.1628	.0109	.8589	.7070	.4031	.0992	.7953
034	.0747	.9227	.7708	.6189	.4669	.3150	.1631	.0111	.8592	.7073	.4034	.0995	.7957
037	.0749	.9230	.7710	.6191	.4672	.3153	.1633	.0114	.8595	.7076	.4037	.0998	.7960
424040	33.0751	33.9232	34.7713	35.6194	36.4674	37.3155	38.1636	39.0117	39.8598	40.7078	42.4040	44.1002	45.7963
043	.0754	.9234	.7715	.6196	.4677	.3158	.1639	.0120	.8600	.7081	.4043	.1005	.7966
046	.0756	.9237	.7718	.6199	.4680	.3160	.1641	.0122	.8603	.7084	.4046	.1008	.7970
049	.0758	.9239	.7720	.6201	.4682	.3163	.1644	.0125	.8606	.7087	.4049	.1011	.7973
052	.0761	.9242	.7723	.6204	.4685	.3166	.1647	.0128	.8609	.7090	.4052	.1014	.7976
424055	33.0763	33.9244	34.7725	35.6206	36.4687	37.3168	38.1650	39.0131	39.8612	40.7093	42.4055	44.1017	45.7979
058	.0765	.9246	.7728	.6209	.4690	.3171	.1652	.0133	.8615	.7096	.4058	.1020	.7983
061	.0768	.9249	.7730	.6211	.4692	.3174	.1655	.0136	.8617	.7099	.4061	.1023	.7986
064	.0770	.9251	.7732	.6214	.4695	.3176	.1658	.0139	.8620	.7101	.4064	.1027	.7989
067	.0772	.9254	.7735	.6216	.4698	.3179	.1660	.0142	.8623	.7104	.4067	.1030	.7992
424070	33.0775	33.9256	34.7737	35.6219	36.4700	37.3182	38.1663	39.0144	39.8626	40.7107	42.4070	44.1033	45.7996
073	.0777	.9258	.7740	.6221	.4703	.3184	.1666	.0147	.8629	.7110	.4073	.1036	.7999
076	.0779	.9261	.7742	.6224	.4705	.3187	.1668	.0150	.8631	.7113	.4076	.1039	.8002
079	.0782	.9263	.7745	.6226	.4708	.3190	.1671	.0153	.8634	.7116	.4079	.1042	.8005
082	.0784	.9266	.7747	.6229	.4711	.3192	.1674	.0155	.8637	.7119	.4082	.1045	.8009
424085	33.0786	33.9268	34.7750	35.6231	36.4713	37.3195	38.1677	39.0158	39.8640	40.7122	42.4085	44.1048	45.8012
088	.0789	.9270	.7752	.6234	.4716	.3197	.1679	.0161	.8643	.7124	.4088	.1052	.8015
091	.0791	.9273	.7755	.6236	.4718	.3200	.1682	.0164	.8646	.7127	.4091	.1055	.8018
094	.0793	.9275	.7757	.6239	.4721	.3203	.1685	.0166	.8648	.7130	.4094	.1058	.8022
097	.0796	.9278	.7760	.6241	.4723	.3205	.1687	.0169	.8651	.7133	.4097	.1061	.8025
424100	33.0798	33.9280	34.7762	35.6244	36.4726	37.3208	38.1690	39.0172	39.8654	40.7136	42.4100	44.1064	45.8028

MEGACYCLES PER SECOND

HARMONICS

BASIC FREQ.	52	54	56	58	60	62	64	66	68	70	72	74	76
424100	22.0532	22.9014	23.7496	24.5978	25.4460	26.2942	27.1424	27.9906	28.8388	29.6870	30.5352	31.3834	32.2316
103	.0534	.9016	.7498	.5980	.4462	.2944	.1426	.9908	.8390	.6872	.5354	.3836	.2318
106	.0535	.9017	.7499	.5981	.4464	.2946	.1428	.9910	.8392	.6874	.5356	.3838	.2321
109	.0537	.9019	.7501	.5983	.4465	.2948	.1430	.9912	.8394	.6876	.5358	.3841	.2323
112	.0538	.9020	.7503	.5985	.4467	.2949	.1432	.9914	.8396	.6878	.5361	.3843	.2325
424115	22.0540	22.9022	23.7504	24.5987	25.4469	26.2951	27.1434	27.9916	28.8398	29.6881	30.5363	31.3845	32.2327
118	.0541	.9024	.7506	.5988	.4471	.2953	.1436	.9918	.8400	.6883	.5365	.3847	.2330
121	.0543	.9025	.7508	.5990	.4473	.2955	.1437	.9920	.8402	.6885	.5367	.3850	.2332
124	.0544	.9027	.7509	.5992	.4474	.2957	.1439	.9922	.8404	.6887	.5369	.3852	.2334
127	.0546	.9029	.7511	.5994	.4476	.2959	.1441	.9924	.8406	.6889	.5371	.3854	.2337
424130	22.0548	22.9030	23.7513	24.5995	25.4478	26.2961	27.1443	27.9926	28.8408	29.6891	30.5374	31.3856	32.2339
133	.0549	.9032	.7514	.5997	.4480	.2962	.1445	.9928	.8410	.6893	.5376	.3858	.2341
136	.0551	.9033	.7516	.5999	.4482	.2964	.1447	.9930	.8412	.6895	.5378	.3861	.2343
139	.0552	.9035	.7518	.6001	.4483	.2966	.1449	.9932	.8415	.6897	.5380	.3863	.2346
142	.0554	.9037	.7520	.6002	.4485	.2968	.1451	.9934	.8417	.6899	.5382	.3865	.2348
424145	22.0555	22.9038	23.7521	24.6004	25.4487	26.2970	27.1453	27.9936	28.8419	29.6902	30.5384	31.3867	32.2350
148	.0557	.9040	.7523	.6006	.4489	.2972	.1455	.9938	.8421	.6904	.5387	.3870	.2352
151	.0559	.9042	.7525	.6008	.4491	.2974	.1457	.9940	.8423	.6906	.5389	.3872	.2355
154	.0560	.9043	.7526	.6009	.4492	.2975	.1459	.9942	.8425	.6908	.5391	.3874	.2357
157	.0562	.9045	.7528	.6011	.4494	.2977	.1460	.9944	.8427	.6910	.5393	.3876	.2359
424160	22.0563	22.9046	23.7530	24.6013	25.4496	26.2979	27.1462	27.9946	28.8429	29.6912	30.5395	31.3878	32.2362
163	.0565	.9048	.7531	.6015	.4498	.2981	.1464	.9948	.8431	.6914	.5397	.3881	.2364
166	.0566	.9050	.7533	.6016	.4500	.2983	.1466	.9950	.8433	.6916	.5400	.3883	.2366
169	.0568	.9051	.7535	.6018	.4501	.2985	.1468	.9952	.8435	.6918	.5402	.3885	.2368
172	.0569	.9053	.7536	.6020	.4503	.2987	.1470	.9954	.8437	.6920	.5404	.3887	.2371
424175	22.0571	22.9055	23.7538	24.6022	25.4505	26.2989	27.1472	27.9956	28.8439	29.6923	30.5406	31.3890	32.2373
178	.0573	.9056	.7540	.6023	.4507	.2990	.1474	.9957	.8441	.6925	.5408	.3892	.2375
181	.0574	.9058	.7541	.6025	.4509	.2992	.1476	.9959	.8443	.6927	.5410	.3894	.2378
184	.0576	.9059	.7543	.6027	.4510	.2994	.1478	.9961	.8445	.6929	.5412	.3896	.2380
187	.0577	.9061	.7545	.6028	.4512	.2996	.1480	.9963	.8447	.6931	.5415	.3898	.2382
424190	22.0579	22.9063	23.7546	24.6030	25.4514	26.2998	27.1482	27.9965	28.8449	29.6933	30.5417	31.3901	32.2384
193	.0580	.9064	.7548	.6032	.4516	.3000	.1484	.9967	.8451	.6935	.5419	.3903	.2387
196	.0582	.9066	.7550	.6034	.4518	.3002	.1485	.9969	.8453	.6937	.5421	.3905	.2389
199	.0583	.9067	.7551	.6035	.4519	.3003	.1487	.9971	.8455	.6939	.5423	.3907	.2391
202	.0585	.9069	.7553	.6037	.4521	.3005	.1489	.9973	.8457	.6941	.5425	.3909	.2394
424205	22.0587	22.9071	23.7555	24.6039	25.4523	26.3007	27.1491	27.9975	28.8459	29.6944	30.5428	31.3912	32.2396
208	.0588	.9072	.7556	.6041	.4525	.3009	.1493	.9977	.8461	.6946	.5430	.3914	.2398
211	.0590	.9074	.7558	.6042	.4527	.3011	.1495	.9979	.8463	.6948	.5432	.3916	.2400
214	.0591	.9076	.7560	.6044	.4528	.3013	.1497	.9981	.8466	.6950	.5434	.3918	.2403
217	.0593	.9077	.7562	.6046	.4530	.3015	.1499	.9983	.8468	.6952	.5436	.3921	.2405
424220	22.0594	22.9079	23.7563	24.6048	25.4532	26.3016	27.1501	27.9985	28.8470	29.6954	30.5438	31.3923	32.2407
223	.0596	.9080	.7565	.6049	.4534	.3018	.1503	.9987	.8472	.6956	.5441	.3925	.2409
226	.0598	.9082	.7567	.6051	.4536	.3020	.1505	.9989	.8474	.6958	.5443	.3927	.2412
229	.0599	.9084	.7568	.6053	.4537	.3022	.1507	.9991	.8476	.6960	.5445	.3929	.2414
232	.0601	.9085	.7570	.6055	.4539	.3024	.1508	.9993	.8478	.6962	.5447	.3932	.2416
424235	22.0602	22.9087	23.7572	24.6056	25.4541	26.3026	27.1510	27.9995	28.8480	29.6965	30.5449	31.3934	32.2419
238	.0604	.9089	.7573	.6058	.4543	.3028	.1512	.9997	.8482	.6967	.5451	.3936	.2421
241	.0605	.9090	.7575	.6060	.4545	.3029	.1514	.9999	.8484	.6969	.5454	.3938	.2423
244	.0607	.9092	.7577	.6062	.4546	.3031	.1516	28.0001	.8486	.6971	.5456	.3941	.2425
247	.0608	.9093	.7578	.6063	.4548	.3033	.1518	.0003	.8488	.6973	.5458	.3943	.2428
424250	22.0610	22.9095	23.7580	24.6065	25.4550	26.3035	27.1520	28.0005	28.8490	29.6975	30.5460	31.3945	32.2430
253	.0612	.9097	.7582	.6067	.4552	.3037	.1522	.0007	.8492	.6977	.5462	.3947	.2432
256	.0613	.9098	.7583	.6068	.4554	.3039	.1524	.0009	.8494	.6979	.5464	.3949	.2435
259	.0615	.9100	.7585	.6070	.4555	.3041	.1526	.0011	.8496	.6981	.5466	.3952	.2437
262	.0616	.9101	.7587	.6072	.4557	.3042	.1528	.0013	.8498	.6983	.5469	.3954	.2439
424265	22.0618	22.9103	23.7588	24.6074	25.4559	26.3044	27.1530	28.0015	28.8500	29.6986	30.5471	31.3956	32.2441
268	.0619	.9105	.7590	.6075	.4561	.3046	.1532	.0017	.8502	.6988	.5473	.3958	.2444
271	.0621	.9106	.7592	.6077	.4563	.3048	.1533	.0019	.8504	.6990	.5475	.3961	.2446
274	.0622	.9108	.7593	.6079	.4564	.3050	.1535	.0021	.8506	.6992	.5477	.3963	.2448
277	.0624	.9110	.7595	.6081	.4566	.3052	.1537	.0023	.8508	.6994	.5479	.3965	.2451
424280	22.0626	22.9111	23.7597	24.6082	25.4568	26.3054	27.1539	28.0025	28.8510	29.6996	30.5482	31.3967	32.2453
283	.0627	.9113	.7598	.6084	.4570	.3055	.1541	.0027	.8512	.6998	.5484	.3969	.2455
286	.0629	.9114	.7600	.6086	.4572	.3057	.1543	.0029	.8514	.7000	.5486	.3972	.2457
289	.0630	.9116	.7602	.6088	.4573	.3059	.1545	.0031	.8517	.7002	.5488	.3974	.2460
292	.0632	.9118	.7604	.6089	.4575	.3061	.1547	.0033	.8519	.7004	.5490	.3976	.2462
424295	22.0633	22.9119	23.7605	24.6091	25.4577	26.3063	27.1549	28.0035	28.8521	29.7007	30.5492	31.3978	32.2464
298	.0635	.9121	.7607	.6093	.4579	.3065	.1551	.0037	.8523	.7009	.5495	.3981	.2466
301	.0637	.9123	.7609	.6095	.4581	.3067	.1553	.0039	.8525	.7011	.5497	.3983	.2469
304	.0638	.9124	.7610	.6096	.4582	.3068	.1555	.0041	.8527	.7013	.5499	.3985	.2471
307	.0640	.9126	.7612	.6098	.4584	.3070	.1556	.0043	.8529	.7015	.5501	.3987	.2473
424310	22.0641	22.9127	23.7614	24.6100	25.4586	26.3072	27.1558	28.0045	28.8531	29.7017	30.5503	31.3989	32.2476
313	.0643	.9129	.7615	.6102	.4588	.3074	.1560	.0047	.8533	.7019	.5505	.3992	.2478
316	.0644	.9131	.7617	.6103	.4590	.3076	.1562	.0049	.8535	.7021	.5508	.3994	.2480
319	.0646	.9132	.7619	.6105	.4591	.3078	.1564	.0051	.8537	.7023	.5510	.3996	.2482
322	.0647	.9134	.7620	.6107	.4593	.3080	.1566	.0053	.8539	.7025	.5512	.3998	.2485
424325	22.0649	22.9136	23.7622	24.6109	25.4595	26.3082	27.1568	28.0055	28.8541	29.7028	30.5514	31.4001	32.2487
328	.0651	.9137	.7624	.6110	.4597	.3083	.1570	.0056	.8543	.7030	.5516	.4003	.2489
331	.0652	.9139	.7625	.6112	.4599	.3085	.1572	.0058	.8545	.7032	.5518	.4005	.2492
334	.0654	.9140	.7627	.6114	.4600	.3087	.1574	.0060	.8547	.7034	.5520	.4007	.2494
337	.0655	.9142	.7629	.6115	.4602	.3089	.1576	.0062	.8549	.7036	.5523	.4009	.2496
424340	22.0657	22.9144	23.7630	24.6117	25.4604	26.3091	27.1578	28.0064	28.8551	29.7038	30.5525	31.4012	32.2498
343	.0658	.9145	.7632	.6119	.4606	.3093	.1580	.0066	.8553	.7040	.5527	.4014	.2501
346	.0660	.9147	.7634	.6121	.4608	.3095	.1581	.0068	.8555	.7042	.5529	.4016	.2503
349	.0661	.9148	.7635	.6122	.4609	.3096	.1583	.0070	.8557	.7044	.5531	.4018	.2505
352	.0663	.9150	.7637	.6124	.4611	.3098	.1585	.0072	.8559	.7046	.5533	.4020	.2508
424355	22.0665	22.9152	23.7639	24.6126	25.4613	26.3100	27.1587	28.0074	28.8561	29.7049	30.5536	31.4023	32.2510
358	.0666	.9153	.7640	.6128	.4615	.3102	.1589	.0076	.8563	.7051	.5538	.4025	.2512
361	.0668	.9155	.7642	.6129	.4617	.3104	.1591	.0078	.8565	.7053	.5540	.4027	.2514
364	.0669	.9157	.7644	.6131	.4618	.3106	.1593	.0080	.8568	.7055	.5542	.4029	.2517
367	.0671	.9158	.7646	.6133	.4620	.3108	.1595	.0082	.8570	.7057	.5544	.4032	.2516
424370	22.0672	22.9160	23.7647	24.6135	25.4622	26.3109	27.1597	28.0084	28.8572	29.7059	30.5546	31.4034	32.2521
373	.0674	.9161	.7649	.6136	.4624	.3111	.1599	.0086	.8574	.7061	.5549	.4036	.2523
376	.0676	.9163	.7651	.6138	.4626	.3113	.1601	.0088	.8576	.7063	.5551	.4038	.2526
379	.0677	.9165	.7652	.6140	.4627	.3115	.1603	.0090	.8578	.7065	.5553	.4040	.2528
382	.0679	.9166	.7654	.6142	.4629	.3117	.1604	.0092	.8580	.7067	.5555	.4043	.2530
424385	22.0680	22.9168	23.7656	24.6143	25.4631	26.3119	27.1606	28.0094	28.8582	29.7070	30.5557	31.4045	32.2533
388	.0682	.9170	.7657	.6145	.4633	.3121	.1608	.0096	.8584	.7072	.5559	.4047	.2535
391	.0683	.9171	.7659	.6147	.4635	.3122	.1610	.0098	.8586	.7074	.5562	.4049	.2537
394	.0685	.9173	.7661	.6149	.4636	.3124	.1612	.0100	.8588	.7076	.5564	.4052	.2539
397	.0686	.9174	.7662	.6150	.4638	.3126	.1614	.0102	.8590	.7078	.5566	.4054	.2542
424400	22.0688	22.9176	23.7664	24.6152	25.4640	26.3128	27.1616	28.0104	28.8592	29.7080	30.5568	31.4056	32.2544

MEGACYCLES PER SECOND

HARMONICS

BASIC FREQ.	78	80	82	84	86	88	90	92	94	96	100	104	108
424100	33.0798	33.9280	34.7762	35.6244	36.4726	37.3208	38.1690	39.0172	39.8654	40.7136	42.4100	44.1064	45.8028
103	.0800	.9282	.7764	.6247	.4729	.3211	.1693	.0175	.8657	.7139	.4103	.1067	.8031
106	.0803	.9285	.7767	.6249	.4731	.3213	.1695	.0178	.8660	.7142	.4106	.1070	.8034
109	.0805	.9287	.7769	.6252	.4734	.3216	.1698	.0180	.8662	.7145	.4109	.1073	.8038
112	.0807	.9290	.7772	.6254	.4736	.3219	.1701	.0183	.8665	.7148	.4112	.1076	.8041
424115	33.0810	33.9292	34.7774	35.6257	36.4739	37.3221	38.1704	39.0186	39.8668	40.7150	42.4115	44.1080	45.8044
118	.0812	.9294	.7777	.6259	.4741	.3224	.1706	.0189	.8671	.7153	.4118	.1083	.8047
121	.0814	.9297	.7779	.6262	.4744	.3226	.1709	.0191	.8674	.7156	.4121	.1086	.8051
124	.0817	.9299	.7782	.6264	.4747	.3229	.1712	.0194	.8677	.7159	.4124	.1089	.8054
127	.0819	.9302	.7784	.6267	.4749	.3232	.1714	.0197	.8679	.7162	.4127	.1092	.8057
424130	33.0821	33.9304	34.7787	35.6269	36.4752	37.3234	38.1717	39.0200	39.8682	40.7165	42.4130	44.1095	45.8060
133	.0824	.9306	.7789	.6272	.4754	.3237	.1720	.0202	.8685	.7168	.4133	.1098	.8064
136	.0826	.9309	.7792	.6274	.4757	.3240	.1722	.0205	.8688	.7171	.4136	.1101	.8067
139	.0828	.9311	.7794	.6277	.4760	.3242	.1725	.0208	.8691	.7173	.4139	.1105	.8070
142	.0831	.9314	.7796	.6279	.4762	.3245	.1728	.0211	.8693	.7176	.4142	.1108	.8073
424145	33.0833	33.9316	34.7799	35.6282	36.4765	37.3248	38.1731	39.0213	39.8696	40.7179	42.4145	44.1111	45.8077
148	.0835	.9318	.7801	.6284	.4767	.3250	.1733	.0216	.8699	.7182	.4148	.1114	.8080
151	.0838	.9321	.7804	.6278	.4770	.3253	.1736	.0219	.8702	.7185	.4151	.1117	.8083
154	.0840	.9323	.7806	.6289	.4772	.3256	.1739	.0222	.8705	.7188	.4154	.1120	.8086
157	.0842	.9326	.7809	.6292	.4775	.3258	.1741	.0224	.8708	.7191	.4157	.1123	.8090
424160	33.0845	33.9328	34.7811	35.6294	36.4778	37.3261	38.1744	39.0227	39.8710	40.7194	42.4160	44.1126	45.8093
163	.0847	.9330	.7814	.6297	.4780	.3263	.1747	.0230	.8713	.7196	.4163	.1130	.8096
166	.0849	.9333	.7816	.6299	.4783	.3266	.1749	.0233	.8716	.7199	.4166	.1133	.8099
169	.0852	.9335	.7819	.6302	.4785	.3269	.1752	.0235	.8719	.7202	.4169	.1136	.8103
172	.0854	.9338	.7821	.6304	.4788	.3271	.1755	.0238	.8722	.7205	.4172	.1139	.8106
424175	33.0857	33.9340	34.7824	35.6307	36.4791	37.3274	38.1758	39.0241	39.8725	40.7208	42.4175	44.1142	45.8109
178	.0859	.9342	.7826	.6310	.4793	.3277	.1760	.0244	.8727	.7211	.4178	.1145	.8112
181	.0861	.9345	.7828	.6312	.4796	.3279	.1763	.0247	.8730	.7214	.4181	.1148	.8115
184	.0864	.9347	.7831	.6315	.4798	.3282	.1766	.0249	.8733	.7217	.4184	.1151	.8119
187	.0866	.9350	.7833	.6317	.4801	.3285	.1768	.0252	.8736	.7220	.4187	.1154	.8122
424190	33.0868	33.9352	34.7836	35.6320	36.4803	37.3287	38.1771	39.0255	39.8739	40.7222	42.4190	44.1158	45.8125
193	.0871	.9354	.7838	.6322	.4806	.3290	.1774	.0258	.8741	.7225	.4193	.1161	.8128
196	.0873	.9357	.7841	.6325	.4809	.3292	.1776	.0260	.8744	.7228	.4196	.1164	.8132
199	.0875	.9359	.7843	.6327	.4811	.3295	.1779	.0263	.8747	.7231	.4199	.1167	.8135
202	.0878	.9362	.7846	.6330	.4814	.3298	.1782	.0266	.8750	.7234	.4202	.1170	.8138
424205	33.0880	33.9364	34.7848	35.6332	36.4816	37.3300	38.1785	39.0269	39.8753	40.7237	42.4205	44.1173	45.8141
208	.0882	.9366	.7851	.6335	.4819	.3303	.1787	.0271	.8756	.7240	.4208	.1176	.8145
211	.0885	.9369	.7853	.6337	.4821	.3306	.1790	.0274	.8758	.7243	.4211	.1179	.8148
214	.0887	.9371	.7855	.6340	.4824	.3308	.1793	.0277	.8761	.7245	.4214	.1183	.8151
217	.0889	.9374	.7858	.6342	.4827	.3311	.1795	.0280	.8764	.7248	.4217	.1186	.8154
424220	33.0892	33.9376	34.7860	35.6345	36.4829	37.3314	38.1798	39.0282	39.8767	40.7251	42.4220	44.1189	45.8158
223	.0894	.9378	.7863	.6347	.4832	.3316	.1801	.0285	.8770	.7254	.4223	.1192	.8161
226	.0896	.9381	.7865	.6350	.4834	.3319	.1803	.0288	.8772	.7257	.4226	.1195	.8164
229	.0899	.9383	.7868	.6352	.4837	.3322	.1806	.0291	.8775	.7260	.4229	.1198	.8167
232	.0901	.9286	.7870	.6355	.4840	.3324	.1809	.0293	.8778	.7263	.4232	.1201	.8171
424235	33.0903	33.9388	34.7873	35.6357	36.4842	37.3327	38.1812	39.0296	39.8781	40.7266	42.4235	44.1204	45.8174
238	.0906	.9390	.7875	.6360	.4845	.3329	.1814	.0299	.8784	.7268	.4238	.1208	.8177
241	.0908	.9393	.7878	.6362	.4847	.3332	.1817	.0302	.8787	.7271	.4241	.1211	.8180
244	.0910	.9395	.7880	.6365	.4850	.3335	.1820	.0304	.8789	.7274	.4244	.1214	.8184
247	.0913	.9398	.7883	.6367	.4852	.3337	.1822	.0307	.8792	.7277	.4247	.1217	.8187
424250	33.0915	33.9400	34.7885	35.6370	36.4855	37.3340	38.1825	39.0310	39.8795	40.7280	42.4250	44.1220	45.8190
253	.0917	.9402	.7887	.6373	.4858	.3343	.1828	.0313	.8798	.7283	.4253	.1223	.8193
256	.0920	.9405	.7890	.6375	.4860	.3345	.1830	.0316	.8801	.7286	.4256	.1226	.8196
259	.0922	.9407	.7892	.6378	.4863	.3348	.1833	.0318	.8803	.7289	.4259	.1229	.8200
262	.0924	.9410	.7895	.6380	.4865	.3351	.1836	.0321	.8806	.7292	.4262	.1232	.8203
424265	33.0927	33.9412	34.7897	35.6383	36.4868	37.3353	38.1839	39.0324	39.8809	40.7294	42.4265	44.1236	45.8206
268	.0929	.9414	.7900	.6385	.4870	.3356	.1841	.0327	.8812	.7297	.4268	.1239	.8209
271	.0931	.9417	.7902	.6388	.4873	.3358	.1844	.0329	.8815	.7300	.4271	.1242	.8213
274	.0934	.9419	.7905	.6390	.4876	.3361	.1847	.0332	.8818	.7303	.4274	.1245	.8216
277	.0936	.9422	.7907	.6393	.4878	.3364	.1849	.0335	.8820	.7306	.4277	.1248	.8219
424280	33.0938	33.9424	34.7910	35.6395	36.4881	37.3366	38.1852	39.0338	39.8823	40.7309	42.4280	44.1251	45.8222
283	.0941	.9426	.7912	.6398	.4883	.3369	.1855	.0340	.8826	.7312	.4283	.1254	.8226
286	.0943	.9429	.7915	.6400	.4886	.3372	.1857	.0343	.8829	.7315	.4286	.1257	.8229
289	.0945	.9431	.7917	.6403	.4889	.3374	.1860	.0346	.8832	.7317	.4289	.1261	.8232
292	.0948	.9434	.7919	.6405	.4891	.3377	.1863	.0349	.8834	.7320	.4292	.1264	.8235
424295	33.0950	33.9436	34.7922	35.6408	36.4894	37.3380	38.1866	39.0351	39.8837	40.7323	42.4295	44.1267	45.8239
298	.0952	.9438	.7924	.6410	.4896	.3382	.1868	.0354	.8840	.7226	.4298	.1270	.8242
301	.0955	.9441	.7927	.6413	.4899	.3385	.1871	.0357	.8843	.7329	.4301	.1273	.8245
304	.0957	.9443	.7929	.6415	.4901	.3388	.1874	.0360	.8846	.7332	.4304	.1276	.8248
307	.0959	.9446	.7932	.6418	.4904	.3390	.1876	.0362	.8849	.7335	.4307	.1279	.8252
424310	33.0962	33.9448	34.7934	35.6420	36.4907	37.3393	38.1879	39.0365	39.8851	40.7338	42.4310	44.1282	45.8255
313	.0964	.9450	.7937	.6423	.4909	.3395	.1882	.0368	.8854	.7340	.4313	.1286	.8258
316	.0966	.9453	.7939	.6425	.4912	.3398	.1884	.0371	.8857	.7343	.4316	.1289	.8261
319	.0969	.9455	.7942	.6428	.4914	.3401	.1887	.0373	.8860	.7346	.4319	.1292	.8265
322	.0971	.9458	.7944	.6430	.4917	.3403	.1890	.0376	.8863	.7349	.4322	.1295	.8268
424325	33.0974	33.9460	34.7947	35.6433	36.4920	37.3406	38.1893	39.0379	39.8866	40.7352	42.4325	44.1298	45.8271
328	.0976	.9462	.7949	.6436	.4922	.3409	.1895	.0382	.8868	.7355	.4328	.1301	.8274
331	.0978	.9465	.7951	.6438	.4925	.3411	.1898	.0385	.8871	.7358	.4331	.1304	.8277
334	.0981	.9467	.7954	.6441	.4927	.3414	.1901	.0387	.8874	.7361	.4334	.1307	.8281
337	.0983	.9470	.7956	.6443	.4930	.3417	.1903	.0309	.8877	.7364	.4337	.1310	.8284
424340	33.0985	33.9472	34.7959	35.6446	36.4932	37.3419	38.1906	39.0393	39.8880	40.7366	42.4340	44.1314	45.8287
343	.0988	.9474	.7961	.6448	.4935	.3422	.1909	.0396	.8882	.7369	.4343	.1317	.8290
346	.0990	.9477	.7964	.6451	.4938	.3424	.1911	.0398	.8885	.7372	.4346	.1320	.8294
349	.0992	.9479	.7966	.6453	.4940	.3427	.1914	.0401	.8888	.7375	.4349	.1323	.8297
352	.0995	.9482	.7969	.6456	.4943	.3430	.1917	.0404	.8891	.7378	.4352	.1326	.8300
424355	33.0997	33.9484	34.7971	35.6458	36.4945	37.3432	38.1920	39.0407	39.8894	40.7381	42.4355	44.1329	45.8303
358	.0999	.9486	.7974	.6461	.4948	.3435	.1922	.0409	.8897	.7384	.4358	.1332	.8307
361	.1002	.9489	.7976	.6463	.4950	.3438	.1925	.0412	.8899	.7387	.4361	.1335	.8310
364	.1004	.9491	.7978	.6466	.4953	.3440	.1928	.0415	.8902	.7389	.4364	.1339	.8313
367	.1006	.9494	.7981	.6468	.4956	.3443	.1930	.0418	.8905	.7392	.4367	.1342	.8316
424370	33.1009	33.9496	34.7983	35.6471	36.4958	37.3446	38.1933	39.0420	39.8908	40.7395	42.4370	44.1345	45.8320
373	.1011	.9498	.7986	.6473	.4961	.3448	.1936	.0423	.8911	.7398	.4373	.1348	.8323
376	.1013	.9501	.7988	.6476	.4963	.3451	.1938	.0426	.8913	.7401	.4376	.1351	.8326
379	.1016	.9503	.7991	.6478	.4966	.3454	.1941	.0429	.8916	.7404	.4379	.1354	.8329
382	.1018	.9506	.7993	.6481	.4969	.3456	.1944	.0431	.8919	.7407	.4382	.1357	.8333
424385	33.1020	33.9508	34.7996	35.6483	36.4971	37.3459	38.1947	39.0434	39.8922	40.7410	42.4385	44.1360	45.8336
388	.1023	.9510	.7998	.6486	.4974	.3461	.1949	.0437	.8925	.7412	.4388	.1364	.8339
391	.1025	.9513	.8001	.6488	.4976	.3464	.1952	.0440	.8928	.7415	.4391	.1367	.8342
394	.1027	.9515	.8003	.6491	.4979	.3467	.1955	.0442	.8930	.7418	.4394	.1370	.8346
397	.1030	.9518	.8006	.6493	.4981	.3469	.1957	.0445	.8933	.7421	.4397	.1373	.8349
424400	33.1032	33.9520	34.8008	35.6496	36.4984	37.3472	38.1960	39.0448	39.8936	40.7424	42.4400	44.1376	45.8352

HARMONICS

BASIC FREQ.	52	54	56	58	60	62	64	66	68	70	72	74	76
424400	22.0688	22.9176	23.7664	24.6152	25.4640	26.3128	27.1616	28.0104	28.8592	29.7080	30.5568	31.4056	32.2544
403	.0690	.9178	.7666	.6154	.4642	.3130	.1618	.0106	.8594	.7082	.5570	.4058	.2546
406	.0691	.9179	.7667	.6155	.4644	.3132	.1620	.0108	.8596	.7084	.5572	.4060	.2549
409	.0693	.9181	.7669	.6157	.4645	.3134	.1622	.0110	.8598	.7086	.5574	.4063	.2551
412	.0694	.9182	.7671	.6159	.4647	.3135	.1624	.0112	.8600	.7088	.5577	.4065	.2553
424415	22.0696	22.9184	23.7672	24.6161	25.4649	26.3137	27.1626	28.0114	28.8602	29.7091	30.5579	31.4067	32.2555
418	.0697	.9186	.7674	.6162	.4651	.3139	.1628	.0116	.8604	.7093	.5581	.4069	.2558
421	.0699	.9187	.7676	.6164	.4653	.3141	.1629	.0118	.8608	.7095	.5583	.4072	.2560
424	.0700	.9189	.7677	.6166	.4654	.3143	.1631	.0120	.8608	.7097	.5585	.4074	.2562
427	.0702	.9191	.7679	.6168	.4656	.3145	.1633	.0122	.8610	.7099	.5587	.4076	.2565
424430	22.0704	22.9192	23.7681	24.6169	25.4658	26.3147	27.1635	28.0124	28.8612	29.7101	30.5590	31.4078	32.2567
433	.0705	.9194	.7682	.6171	.4660	.3148	.1637	.0126	.8614	.7103	.5592	.4080	.2569
436	.0707	.9195	.7684	.6173	.4662	.3150	.1639	.0128	.8616	.7105	.5594	.4083	.2571
439	.0708	.9197	.7686	.6175	.4663	.3152	.1641	.0130	.8619	.7107	.5596	.4085	.2574
442	.0710	.9199	.7688	.6176	.4665	.3154	.1643	.0132	.8621	.7109	.5598	.4087	.2576
424445	22.0711	22.9200	23.7689	24.6178	25.4667	26.3156	27.1645	28.0134	28.8623	29.7112	30.5600	31.4089	32.2578
448	.0713	.9202	.7691	.6180	.4669	.3158	.1647	.0136	.8625	.7114	.5603	.4092	.2580
451	.0715	.9204	.7693	.6182	.4671	.3160	.1649	.0138	.8627	.7116	.5605	.4094	.2583
454	.0716	.9205	.7694	.6183	.4672	.3161	.1651	.0140	.8629	.7118	.5607	.4096	.2585
457	.0718	.9207	.7696	.6185	.4674	.3163	.1652	.0142	.8631	.7120	.5609	.4098	.2587
424460	22.0719	22.9208	23.7698	24.6187	25.4676	26.3165	27.1654	28.0144	28.8633	29.7122	30.5611	31.4100	32.2590
463	.0721	.9210	.7699	.6189	.4678	.3167	.1656	.0146	.8635	.7124	.5613	.4103	.2592
466	.0722	.9212	.7701	.6190	.4680	.3169	.1658	.0148	.8637	.7126	.5616	.4105	.2594
469	.0724	.9213	.7703	.6192	.4681	.3171	.1660	.0150	.8639	.7128	.5618	.4107	.2596
472	.0725	.9215	.7704	.6194	.4683	.3173	.1662	.0152	.8641	.7130	.5620	.4109	.2599
424475	22.0727	22.9217	23.7706	24.6196	25.4685	26.3175	27.1664	28.0154	28.8643	29.7133	30.5622	31.4112	32.2601
478	.0729	.9218	.7708	.6197	.4687	.3176	.1666	.0155	.8645	.7135	.5624	.4114	.2603
481	.0730	.9220	.7709	.6199	.4689	.3178	.1668	.0157	.8647	.7137	.5626	.4116	.2606
484	.0732	.9221	.7711	.6201	.4690	.3180	.1670	.0159	.8649	.7139	.5628	.4118	.2608
487	.0733	.9223	.7713	.6202	.4692	.3182	.1672	.0161	.8651	.7141	.5631	.4120	.2610
424490	22.0735	22.9225	23.7714	24.6204	25.4694	26.3184	27.1674	28.0163	28.8653	29.7143	30.5633	31.4123	32.2612
493	.0736	.9226	.7716	.6206	.4696	.3186	.1676	.0165	.8655	.7145	.5635	.4125	.2615
496	.0738	.9228	.7718	.6208	.4698	.3188	.1677	.0167	.8657	.7147	.5637	.4127	.2617
499	.0739	.9229	.7719	.6209	.4699	.3189	.1679	.0169	.8659	.7149	.5639	.4129	.2619
502	.0741	.9231	.7721	.6211	.4701	.3191	.1681	.0171	.8661	.7151	.5641	.4131	.2622
424505	22.0743	22.9233	23.7723	24.6213	25.4703	26.3193	27.1683	28.0173	28.8663	29.7154	30.5644	31.4134	32.2624
508	.0744	.9234	.7724	.6215	.4705	.3195	.1685	.0175	.8665	.7156	.5646	.4136	.2626
511	.0746	.9236	.7726	.6216	.4707	.3197	.1687	.0177	.8667	.7158	.5648	.4138	.2628
514	.0747	.9238	.7728	.6218	.4708	.3199	.1689	.0179	.8670	.7160	.5650	.4140	.2631
517	.0749	.9239	.7730	.6220	.4710	.3201	.1691	.0181	.8672	.7162	.5652	.4143	.2633
424520	22.0750	22.9241	23.7731	24.6222	25.4712	26.3202	27.1693	28.0183	28.8674	29.7164	30.5654	31.4145	32.2635
523	.0752	.9242	.7733	.6223	.4714	.3204	.1695	.0185	.8676	.7166	.5657	.4147	.2637
526	.0754	.9244	.7735	.6225	.4716	.3206	.1697	.0187	.8678	.7168	.5659	.4149	.2640
529	.0755	.9246	.7736	.6227	.4717	.3208	.1699	.0189	.8680	.7170	.5661	.4151	.2642
532	.0757	.9247	.7738	.6229	.4719	.3210	.1700	.0191	.8682	.7172	.5663	.4154	.2644
424535	22.0758	22.9249	23.7740	24.6230	25.4721	26.3212	27.1702	28.0193	28.8684	29.7175	30.5665	31.4156	32.2647
538	.0760	.9251	.7741	.6232	.4723	.3214	.1704	.0195	.8686	.7177	.5667	.4158	.2649
541	.0761	.9252	.7743	.6234	.4725	.3215	.1706	.0197	.8688	.7179	.5670	.4160	.2651
544	.0763	.9254	.7745	.6236	.4726	.3217	.1708	.0199	.8690	.7181	.5672	.4163	.2653
547	.0764	.9255	.7746	.6237	.4728	.3219	.1710	.0201	.8692	.7183	.5674	.4165	.2656
424550	22.0766	22.9257	23.7748	24.6239	25.4730	26.3221	27.1712	28.0203	28.8694	29.7185	30.5676	31.4167	32.2658
553	.0768	.9259	.7750	.6241	.4732	.3223	.1714	.0205	.8696	.7187	.5678	.4169	.2660
556	.0769	.9260	.7751	.6242	.4734	.3225	.1716	.0207	.8698	.7189	.5680	.4171	.2663
559	.0771	.9262	.7753	.6244	.4735	.3227	.1718	.0209	.8700	.7191	.5682	.4174	.2665
562	.0772	.9263	.7755	.6246	.4737	.3228	.1720	.0211	.8702	.7193	.5685	.4176	.2667
424565	22.0774	22.9265	23.7756	24.6248	25.4739	26.3230	27.1722	28.0213	28.8704	29.7196	30.5687	31.4178	32.2669
568	.0775	.9267	.7758	.6249	.4741	.3232	.1724	.0215	.8706	.7198	.5689	.4180	.2672
571	.0777	.9268	.7760	.6251	.4743	.3234	.1725	.0217	.8708	.7200	.5691	.4183	.2674
574	.0778	.9270	.7761	.6253	.4744	.3236	.1727	.0219	.8710	.7202	.5693	.4185	.2676
577	.0780	.9272	.7763	.6255	.4746	.3238	.1729	.0221	.8712	.7204	.5695	.4187	.2679
424580	22.0782	22.9273	23.7765	24.6256	25.4748	26.3240	27.1731	28.0223	28.8714	29.7206	30.5698	31.4189	32.2681
583	.0783	.9275	.7766	.6258	.4750	.3241	.1733	.0225	.8716	.7208	.5700	.4191	.2683
586	.0785	.9276	.7768	.6260	.4752	.3243	.1735	.0227	.8718	.7210	.5702	.4194	.2685
589	.0786	.9278	.7770	.6262	.4753	.3245	.1737	.0229	.8721	.7212	.5704	.4196	.2688
592	.0788	.9280	.7772	.6263	.4755	.3247	.1739	.0231	.8723	.7214	.5706	.4198	.2690
424595	22.0789	22.9281	23.7773	24.6265	25.4757	26.3249	27.1741	28.0233	28.8725	29.7217	30.5708	31.4200	32.2692
598	.0791	.9283	.7775	.6267	.4759	.3251	.1743	.0235	.8727	.7219	.5711	.4203	.2694
601	.0793	.9285	.7777	.6269	.4761	.3253	.1745	.0237	.8729	.7221	.5713	.4205	.2697
604	.0794	.9286	.7778	.6270	.4762	.3254	.1747	.0239	.8731	.7223	.5715	.4207	.2699
607	.0796	.9288	.7780	.6272	.4764	.3256	.1748	.0241	.8733	.7225	.5717	.4209	.2701
424610	22.0797	22.9289	23.7782	24.6274	25.4766	26.3258	27.1750	28.0243	28.8735	29.7227	30.5719	31.4211	32.2704
613	.0799	.9291	.7783	.6276	.4768	.3260	.1752	.0245	.8737	.7229	.5721	.4214	.2706
616	.0800	.9293	.7785	.6277	.4770	.3262	.1754	.0247	.8739	.7231	.5724	.4216	.2708
619	.0802	.9294	.7787	.6279	.4771	.3264	.1756	.0249	.8741	.7233	.5726	.4218	.2710
622	.0803	.9296	.7788	.6281	.4773	.3266	.1758	.0251	.8743	.7235	.5728	.4220	.2713
424625	22.0805	22.9298	23.7790	24.6283	25.4775	26.3268	27.1760	28.0253	28.8745	29.7238	30.5730	31.4223	32.2715
628	.0807	.9299	.7792	.6284	.4777	.3269	.1762	.0254	.8747	.7240	.5732	.4225	.2717
631	.0808	.9301	.7793	.6286	.4779	.3271	.1764	.0256	.8749	.7242	.5734	.4227	.2720
634	.0810	.9302	.7795	.6288	.4780	.3273	.1766	.0258	.8751	.7244	.5736	.4229	.2722
637	.0811	.9304	.7797	.6289	.4782	.3275	.1768	.0260	.8753	.7246	.5739	.4231	.2724
424640	22.0813	22.9306	23.7798	24.6291	25.4784	26.3277	27.1770	28.0262	28.8755	29.7248	30.5741	31.4234	32.2726
643	.0814	.9307	.7800	.6293	.4786	.3279	.1772	.0264	.8757	.7250	.5743	.4236	.2729
646	.0816	.9309	.7802	.6295	.4788	.3281	.1773	.0266	.8759	.7252	.5745	.4238	.2731
649	.0817	.9310	.7803	.6296	.4789	.3282	.1775	.0268	.8761	.7254	.5747	.4240	.2733
652	.0819	.9312	.7805	.6298	.4791	.3284	.1777	.0270	.8763	.7256	.5749	.4242	.2736
424655	22.0821	22.9314	23.7807	24.6300	25.4793	26.3286	27.1779	28.0282	28.8765	29.7259	30.5752	31.4245	32.2738
658	.0822	.9315	.7808	.6302	.4795	.3288	.1781	.0274	.8767	.7261	.5754	.4247	.2740
661	.0824	.9317	.7810	.6303	.4797	.3290	.1783	.0276	.8769	.7263	.5756	.4249	.2742
664	.0825	.9319	.7812	.6305	.4798	.3292	.1785	.0278	.8772	.7265	.5758	.4251	.2745
667	.0827	.9320	.7814	.6307	.4800	.3294	.1787	.0280	.8774	.7267	.5760	.4254	.2747
424670	22.0828	22.9322	23.7815	24.6309	25.4802	26.3295	27.1789	28.0282	28.8776	29.7269	30.5762	31.4256	32.2749
673	.0830	.9323	.7817	.6310	.4804	.3297	.1791	.0284	.8778	.7271	.5765	.4258	.2751
676	.0832	.9325	.7819	.6312	.4806	.3299	.1793	.0286	.8780	.7273	.5767	.4260	.2754
679	.0833	.9327	.7820	.6314	.4807	.3301	.1795	.0288	.8782	.7275	.5769	.4262	.2756
682	.0835	.9328	.7822	.6316	.4809	.3303	.1796	.0290	.8784	.7277	.5771	.4265	.2758
424685	22.0836	22.9330	23.7824	24.6317	25.4811	26.3305	27.1798	28.0292	28.8786	29.7280	30.5773	31.4267	32.2761
688	.0838	.9332	.7825	.6319	.4813	.3307	.1800	.0294	.8788	.7282	.5775	.4269	.2763
691	.0839	.9333	.7827	.6321	.4815	.3308	.1802	.0296	.8790	.7284	.5778	.4271	.2765
694	.0841	.9335	.7829	.6323	.4816	.3310	.1804	.0298	.8792	.7286	.5780	.4274	.2767
697	.0842	.9336	.7830	.6324	.4818	.3312	.1806	.0300	.8794	.7288	.5782	.4276	.2770
424700	22.0844	22.9338	23.7832	24.6326	25.4820	26.3314	27.1808	28.0302	28.8796	29.7290	30.5784	31.4278	32.2772

MEGACYCLES PER SECOND

HARMONICS

BASIC FREQ.	78	80	82	84	86	88	90	92	94	96	100	104	108
424400	33.1032	33.9520	34.8008	35.6496	36.4984	37.3472	38.1960	39.0448	39.8936	40.7424	42.4400	44.1376	45.8352
403	.1034	.9522	.8010	.6499	.4987	.3475	.1963	.0451	.8939	.7427	.4403	.1379	.8355
406	.1037	.9525	.8013	.6501	.4989	.3477	.1965	.0454	.8942	.7430	.4406	.1382	.8358
409	.1039	.9527	.8015	.6504	.4992	.3480	.1968	.0456	.8944	.7433	.4409	.1385	.8362
412	.1041	.9530	.8018	.6506	.4994	.3483	.1971	.0459	.8947	.7436	.4412	.1388	.8365
424415	33.1044	33.9532	34.8020	35.6509	36.4997	37.3485	38.1974	39.0462	39.8950	40.7438	42.4415	44.1392	45.8368
418	.1046	.9534	.8023	.6511	.4999	.3488	.1976	.0465	.8953	.7441	.4418	.1395	.8371
421	.1048	.9537	.8025	.6514	.5002	.3490	.1979	.0467	.8956	.7444	.4421	.1398	.8375
424	.1051	.9539	.8028	.6516	.5005	.3493	.1982	.0470	.8959	.7447	.4424	.1401	.8378
427	.1053	.9542	.8030	.6519	.5007	.3496	.1984	.0473	.8961	.7450	.4427	.1404	.8381
424430	33.1055	33.9544	34.8033	35.6521	36.5010	37.3498	38.1987	39.0476	39.8964	40.7453	42.4430	44.1407	45.8384
433	.1058	.9546	.8035	.6524	.5012	.3501	.1990	.0478	.8967	.7456	.4433	.1410	.8388
436	.1060	.9549	.8038	.6526	.5015	.3504	.1992	.0481	.8970	.7459	.4436	.1413	.8391
439	.1062	.9551	.8040	.6529	.5018	.3506	.1995	.0484	.8973	.7461	.4439	.1417	.8394
442	.1065	.9554	.8042	.6531	.5020	.3509	.1998	.0487	.8975	.7464	.4442	.1420	.8397
424445	33.1067	33.9556	34.8045	35.6534	36.5023	37.3512	38.2001	39.0489	39.8978	40.7467	42.4445	44.1423	45.8401
448	.1069	.9558	.8047	.6536	.5025	.3514	.2003	.0492	.8981	.7470	.4448	.1426	.8404
451	.1072	.9561	.8050	.6539	.5028	.3517	.2006	.0495	.8984	.7473	.4451	.1429	.8407
454	.1074	.9563	.8052	.6541	.5030	.3520	.2009	.0498	.8987	.7476	.4454	.1432	.8410
457	.1076	.9566	.8055	.6544	.5033	.3522	.2011	.0500	.8990	.7479	.4457	.1435	.8414
424460	33.1079	33.9568	34.8057	35.6546	36.5036	37.3525	38.2014	39.0503	39.8992	40.7482	42.4460	44.1438	45.8417
463	.1081	.9570	.8060	.6549	.5038	.3527	.2017	.0506	.8995	.7484	.4463	.1442	.8420
466	.1083	.9573	.8062	.6551	.5041	.3530	.2019	.0509	.8998	.7487	.4466	.1445	.8423
469	.1086	.9575	.8065	.6554	.5043	.3533	.2022	.0511	.9001	.7490	.4469	.1448	.8427
472	.1088	.9578	.8067	.6556	.5046	.3535	.2025	.0514	.9004	.7493	.4472	.1451	.8430
424475	33.1091	33.9580	34.8070	35.6559	36.5049	37.3538	38.2028	39.0517	39.9007	40.7496	42.4476	44.1454	45.8433
478	.1093	.9582	.8072	.6562	.5051	.3541	.2030	.0520	.9009	.7499	.4478	.1457	.8436
481	.1095	.9585	.8074	.6564	.5054	.3543	.2033	.0523	.9012	.7502	.4481	.1460	.8439
484	.1098	.9587	.8077	.6567	.5056	.3546	.2036	.0525	.9015	.7505	.4484	.1463	.8443
487	.1100	.9590	.8079	.6569	.5059	.3549	.2038	.0528	.9018	.7508	.4487	.1466	.8446
424490	33.1102	33.9592	34.8082	35.6572	36.5061	37.3551	38.2041	39.0531	39.9021	40.7510	42.4490	44.1470	45.8449
493	.1105	.9594	.8084	.6574	.5064	.3554	.2044	.0534	.9023	.7513	.4493	.1475	.8452
496	.1107	.9597	.8087	.6577	.5067	.3556	.2046	.0536	.9026	.7516	.4496	.1476	.8456
499	.1109	.9599	.8089	.6579	.5069	.3559	.2049	.0539	.9029	.7519	.4499	.1479	.8459
502	.1112	.9602	.8092	.6582	.5072	.3562	.2052	.0542	.9032	.7522	.4502	.1482	.8462
424505	33.1114	33.9604	34.8094	35.6584	36.5074	37.3564	38.2055	39.0545	39.9035	40.7525	42.4505	44.1485	45.8465
508	.1116	.9606	.8097	.6587	.5077	.3567	.2057	.0547	.9038	.7528	.4508	.1488	.8469
511	.1119	.9609	.8099	.6589	.5079	.3570	.2060	.0550	.9040	.7531	.4511	.1491	.8472
514	.1121	.9611	.8101	.6592	.5082	.3572	.2063	.0553	.9043	.7533	.4514	.1495	.8475
517	.1123	.9614	.8104	.6594	.5085	.3575	.2065	.0556	.9046	.7536	.4517	.1498	.8478
424520	33.1126	33.9616	34.8106	35.6597	36.5087	37.3578	38.2068	39.0558	39.9049	40.7539	42.4520	44.1501	45.8482
523	.1128	.9618	.8109	.6599	.5090	.3580	.2071	.0561	.9052	.7542	.4523	.1504	.8485
526	.1130	.9621	.8111	.6602	.5092	.3583	.2073	.0564	.9054	.7545	.4526	.1507	.8488
529	.1133	.9623	.8114	.6604	.5095	.3586	.2076	.0567	.9057	.7548	.4529	.1510	.8491
532	.1135	.9626	.8116	.6607	.5098	.3588	.2079	.0569	.9060	.7551	.4532	.1513	.8495
424535	33.1137	33.9628	34.8119	35.6609	36.5100	37.3591	38.2082	39.0572	39.9063	40.7554	42.4535	44.1516	45.8498
538	.1140	.9630	.8121	.6612	.5103	.3593	.2084	.0575	.9066	.7556	.4538	.1520	.8501
541	.1142	.9633	.8124	.6614	.5105	.3596	.2087	.0578	.9069	.7559	.4541	.1523	.8504
544	.1144	.9635	.8126	.6617	.5108	.3599	.2090	.0580	.9071	.7562	.4544	.1526	.8508
547	.1147	.9638	.8129	.6619	.5110	.3601	.2092	.0583	.9074	.7565	.4547	.1529	.8511
424550	33.1149	33.9640	34.8131	35.6622	36.5113	37.3604	38.2095	39.0586	39.9077	40.7568	42.4550	44.1532	45.8514
553	.1151	.9642	.8133	.6625	.5116	.3607	.2098	.0589	.9080	.7571	.4553	.1535	.8517
556	.1154	.9645	.8136	.6627	.5118	.3609	.2100	.0592	.9083	.7574	.4556	.1538	.8520
559	.1156	.9647	.8138	.6630	.5121	.3612	.2103	.0594	.9085	.7577	.4559	.1541	.8524
562	.1158	.9650	.8141	.6632	.5123	.3615	.2106	.0597	.9088	.7580	.4562	.1544	.8527
424565	33.1161	33.9652	34.8143	35.6635	36.5126	37.3617	38.2109	39.0600	39.9091	40.7582	42.4565	44.1548	45.8530
568	.1163	.9654	.8146	.6637	.5128	.3620	.2111	.0603	.9094	.7585	.4568	.1551	.8533
571	.1165	.9657	.8148	.6640	.5131	.3622	.2114	.0605	.9097	.7588	.4571	.1554	.8537
574	.1168	.9659	.8151	.6642	.5134	.3625	.2117	.0608	.9100	.7591	.4574	.1557	.8540
577	.1170	.9662	.8153	.6645	.5136	.3628	.2119	.0611	.9102	.7594	.4577	.1560	.8543
424580	33.1172	33.9664	34.8156	35.6647	36.5139	37.3630	38.2122	39.0614	39.9105	40.7597	42.4580	44.1563	45.8546
583	.1175	.9666	.8158	.6650	.5141	.3633	.2125	.0616	.9108	.7600	.4583	.1566	.8550
586	.1177	.9669	.8161	.6652	.5144	.3636	.2127	.0619	.9111	.7603	.4586	.1569	.8553
589	.1179	.9671	.8163	.6655	.5147	.3638	.2130	.0622	.9114	.7605	.4589	.1573	.8556
592	.1182	.9674	.8165	.6657	.5149	.3641	.2133	.0625	.9116	.7608	.4592	.1576	.8559
424595	33.1184	33.9676	34.8168	35.6660	36.5152	37.3644	38.2136	39.0627	39.9119	40.7611	42.4595	44.1579	45.8563
598	.1186	.9678	.8170	.6662	.5154	.3646	.2138	.0630	.9122	.7614	.4598	.1582	.8566
601	.1189	.9681	.8173	.6665	.5157	.3649	.2141	.0633	.9125	.7617	.4601	.1585	.8569
604	.1191	.9683	.8175	.6667	.5159	.3652	.2144	.0636	.9128	.7620	.4604	.1588	.8572
607	.1193	.9686	.8178	.6670	.5162	.3654	.2146	.0638	.9131	7623	.4607	.1591	.8576
424610	33.1196	33.9688	34.8180	35.6672	36.5165	37.3657	38.2149	39.0641	39.9133	40.7626	42.4610	44.1594	45.8579
613	.1198	.9690	.8183	.6675	.5167	.3659	.2152	.0644	.9136	.7628	.4613	.1598	.8582
616	.1200	.9693	.8185	.6677	.5170	.3662	.2154	.0647	.9139	.7631	.4616	.1601	.8585
619	.1203	.9695	.8188	.6680	.5172	.3665	.2157	.0649	.9142	.7634	.4619	.1604	.8589
622	.1205	.9698	.8190	.6682	.5175	.3667	.2160	.0652	.9145	.7637	.4622	.1607	.8592
424625	33.1208	33.9700	34.8193	35.6685	36.5178	37.3670	38.2163	39.0655	39.9148	40.7640	42.4625	44.1610	45.8595
628	.1210	.9702	.8195	.6688	.5180	.3673	.2165	.0658	.9150	.7643	.4628	.1613	.8598
631	.1212	.9705	.8197	.6690	.5183	.3675	.2168	.0661	.9153	.7646	.4631	.1616	.8601
634	.1215	.9707	.8200	.6693	.5185	.3678	.2171	.0663	.9156	.7649	.4634	.1619	.8605
637	.1217	.9710	.8202	.6695	.5188	.3681	.2173	.0666	.9159	.7652	.4637	.1622	.8608
424640	33.1219	33.9712	34.8205	35.6698	36.5190	37.3683	38.2176	39.0669	39.9162	40.7654	42.4640	44.1626	45.8611
643	.1222	.9714	.8207	.6700	.5193	.3686	.2179	.0672	.9164	.7657	.4643	.1629	.8614
646	.1224	.9717	.8210	.6703	.5196	.3688	.2181	.0674	.9167	.7660	.4646	.1632	.8618
649	.1226	.9719	.8212	.6705	.5198	.3691	.2184	.0677	.9170	.7663	.4649	.1635	.8621
652	.1229	.9722	.8215	.6708	.5201	.3694	.2187	.0680	.9173	.7666	.4652	.1638	.8624
424655	33.1231	33.9724	34.8217	35.6710	36.5203	37.3696	38.2190	39.0683	39.9176	40.7669	42.4655	44.1641	45.8627
658	.1233	.9726	.8220	.6713	.5206	.3699	.2192	.0685	.9179	.7672	.4658	.1644	.8631
661	.1236	.9729	.8222	.6715	.5208	.3702	.2195	.0688	.9181	.7675	.4661	.1647	.8634
664	.1238	.9731	.8224	.6718	.5211	.3704	.2198	.0691	.9184	.7677	.4664	.1651	.8637
667	.1240	.9734	.8227	.6720	.5214	.3707	.2200	.0694	.9187	.7680	.4667	.1654	.8640
424670	33.1243	33.9736	34.8229	35.6723	36.5216	37.3710	38.2203	39.0696	39.9190	40.7673	42.4670	44.1657	45.8644
673	.1245	.9738	.8232	.6725	.5219	.3712	.2206	.0699	.9193	.7686	.4673	.1660	.8647
676	.1247	.9741	.8234	.6728	.5221	.3715	.2208	.0702	.9195	.7689	.4676	.1663	.8650
679	.1250	.9743	.8237	.6730	.5224	.3718	.2211	.0705	.9198	.7692	.4679	.1666	.8653
682	.1252	.9746	.8239	.6733	.5227	.3720	.2214	.0707	.9201	.7695	.4682	.1669	.8657
424685	33.1254	33.9748	34.8242	35.6735	36.5229	37.3723	38.2217	39.0710	39.9204	40.7698	42.4685	44.1672	45.8660
688	.1257	.9750	.8244	.6738	.5232	.3725	.2219	.0713	.9207	.7700	.4688	.1676	.8663
691	.1259	.9753	.8247	.6740	.5234	.3728	.2222	.0716	.9210	.7703	.4691	.1679	.8666
694	.1261	.9755	.8249	.6743	.5237	.3731	.2225	.0718	.9212	.7706	.4694	.1682	.8670
697	.1264	.9758	.8252	.6745	.5239	.3733	.2227	.0721	.9215	.7709	.4697	.1685	.8673
424700	33.1266	33.9760	34.8254	35.6748	36.5242	37.3736	38.2230	39.0724	39.9218	40.7712	42.4700	44.1688	45.8676

MEGACYCLES PER SECOND

HARMONICS

BASIC FREQ.	52	54	56	58	60	62	64	66	68	70	72	74	76
424700	22.0844	22.9338	23.7832	24.6326	25.4820	26.3314	27.1808	28.0302	28.8796	29.7290	30.5784	31.4278	32.2772
703	.0846	.9340	.7834	.6328	.4822	.3316	.1810	.0304	.8798	.7292	.5786	.4280	.2774
706	.0847	.9341	.7835	.6329	.4824	.3318	.1812	.0306	.8800	.7294	.5788	.4282	.2777
709	.0849	.9343	.7837	.6331	.4825	.3320	.1814	.0308	.8802	.7296	.5790	.4285	.2779
712	.0850	.9344	.7839	.6333	.4827	.3321	.1816	.0310	.8804	.7298	.5793	.4287	.2781
424715	22.0852	22.9346	23.7840	24.6335	25.4829	26.3323	27.1818	28.0312	28.8806	29.7301	30.5795	31.4289	32.2783
718	.0853	.9348	.7842	.6336	.4831	.3325	.1820	.0314	.8808	.7303	.5797	.4291	.2786
721	.0855	.9349	.7844	.6338	.4833	.3327	.1821	.0316	.8810	.7305	.5799	.4294	.2788
724	.0856	.9351	.7845	.6340	.4834	.3329	.1823	.0318	.8812	.7307	.5801	.4296	.2790
727	.0858	.9353	.7847	.6342	.4836	.3331	.1825	.0320	.8814	.7309	.5803	.4298	.2793
424730	22.0860	22.9354	23.7849	24.6343	25.4838	26.3333	27.1827	28.0322	28.8816	29.7311	30.5806	31.4300	32.2795
733	.0861	.9356	.7850	.6345	.4840	.3334	.1829	.0324	.8818	.7313	.5808	.4302	.2797
736	.0863	.9357	.7852	.6347	.4842	.3336	.1831	.0326	.8820	.7315	.5810	.4305	.2799
739	.0864	.9359	.7854	.6349	.4843	.3338	.1833	.0328	.8823	.7317	.5812	.4307	.2802
742	.0866	.9361	.7856	.6350	.4845	.3340	.1835	.0330	.8825	.7319	.5814	.4309	.2804
424745	22.0867	22.9362	23.7857	24.6352	25.4847	26.3342	27.1837	28.0332	28.8827	29.7322	30.5816	31.4311	32.2806
748	.0869	.9364	.7859	.6354	.4849	.3344	.1839	.0334	.8829	.7324	.5819	.4314	.2808
751	.0871	.9366	.7861	.6356	.4851	.3346	.1841	.0336	.8831	.7326	.5821	.4316	.2811
754	.0872	.9367	.7862	.6357	.4852	.3347	.1843	.0338	.8833	.7328	.5823	.4318	.2813
757	.0874	.9369	.7864	.6359	.4854	.3349	.1844	.0340	.8835	.7330	.5825	.4320	.2815
424760	22.0875	22.9370	23.7866	24.6361	25.4856	26.3351	27.1846	28.0342	28.8837	29.7332	30.5827	31.4322	32.2818
763	.0877	.9372	.7867	.6363	.4858	.3353	.1848	.0344	.8839	.7334	.5829	.4325	.2820
766	.0878	.9374	.7869	.6364	.4860	.3355	.1850	.0346	.8841	.7336	.5832	.4327	.2822
769	.0880	.9375	.7871	.6366	.4861	.3357	.1852	.0348	.8843	.7338	.5834	.4329	.2824
772	.0881	.9377	.7872	.6368	.4863	.3359	.1854	.0350	.8845	.7340	.5836	.4331	.2827
424775	22.0883	22.9379	23.7874	24.6370	25.4865	26.3361	27.1856	28.0352	28.8847	29.7343	30.5838	31.4334	32.2829
778	.0885	.9380	.7876	.6371	.4867	.3362	.1858	.0353	.8849	.7345	.5840	.4336	.2831
781	.0886	.9382	.7877	.6373	.4869	.3364	.1860	.0355	.8851	.7347	.5842	.4338	.2834
784	.0888	.9383	.7879	.6375	.4870	.3366	.1862	.0357	.8853	.7349	.5844	.4340	.2836
787	.0889	.9385	.7881	.6376	.4872	.3368	.1864	.0359	.8855	.7351	.5847	.3342	.2838
424790	22.0891	22.9387	23.7882	24.6378	25.4874	26.3370	27.1866	28.0361	28.8857	29.7353	30.5849	31.4345	32.2840
793	.0892	.9388	.7884	.6380	.4876	.3372	.1868	.0363	.8859	.7355	.5851	.4347	.2843
796	.0894	.9390	.7886	.6382	.4878	.3374	.1869	.0365	.8861	.7357	.5853	.4349	.2845
799	.0895	.9391	.7887	.6383	.4879	.3375	.1871	.0367	.8863	.7359	.5855	.4351	.2847
802	.0897	.9393	.7889	.6385	.4881	.3377	.1873	.0369	.8865	.7361	.5857	.4353	.2850
424805	22.0899	22.9395	23.7891	24.6387	25.4883	26.3379	27.1875	28.0371	28.8867	29.7364	30.5860	31.4356	32.2852
808	.0900	.9396	.7892	.6389	.4885	.3381	.1877	.0373	.8869	.7366	.5862	.4358	.2854
811	.0902	.9398	.7894	.6390	.4887	.3383	.1879	.0375	.8871	.7368	.5864	.4360	.2856
814	.0903	.9400	.7896	.6392	.4888	.3385	.1881	.0377	.8874	.7370	.5866	.4362	.2859
817	.0905	.9401	.7898	.6394	.4890	.3387	.1883	.0379	.8876	.7372	.5868	.4365	.2861
424820	22.0906	22.9403	23.7899	24.6396	25.4892	26.3388	27.1885	28.0381	28.8878	29.7374	30.5870	31.4367	32.2863
823	.0908	.9404	.7901	.6397	.4894	.3390	.1887	.0383	.8880	.7376	.5873	.4369	.2865
826	.0910	.9406	.7903	.6399	.4896	.3392	.1889	.0385	.8882	.7378	.5875	.4371	.2868
829	.0911	.9408	.7904	.6401	.4897	.3394	.1891	.0387	.8884	.7380	.5877	.4373	.2870
832	.0913	.9409	.7906	.6403	.4899	.3396	.1892	.0389	.8886	.7382	.5879	.4376	.2872
424835	22.0914	22.9411	23.7908	24.6404	25.4901	26.3398	27.1894	28.0391	28.8888	29.7385	30.5881	31.4378	32.2875
838	.0916	.9413	.7909	.6406	.4903	.3400	.1896	.0393	.8890	.7387	.5883	.4380	.2877
841	.0917	.9414	.7911	.6408	.4905	.3401	.1898	.0395	.8892	.7389	.5886	.4382	.2879
844	.0919	.9416	.7913	.6410	.4906	.3403	.1900	.0397	.8894	.7391	.5888	.4385	.2881
847	.0920	.9417	.7914	.6411	.4908	.3405	.1902	.0399	.8896	.7393	.5890	.4387	.2884
424850	22.0922	22.9419	23.7916	24.6413	25.4910	26.3407	27.1904	28.0401	28.8898	29.7395	30.5892	31.4389	32.2886
853	.0924	.9421	.7918	.6415	.4912	.3409	.1906	.0403	.8900	.7397	.5894	.4391	.2888
856	.0925	.9422	.7919	.6416	.4914	.3411	.1908	.0405	.8902	.7399	.5896	.4393	.2891
859	.0927	.9424	.7921	.6418	.4915	.3413	.1910	.0407	.8904	.7401	.5898	.4396	.2893
862	.0928	.9425	.7923	.6420	.4917	.3414	.1912	.0409	.8906	.7403	.5901	.4398	.2895
424865	22.0930	22.9427	23.7924	24.6422	25.4919	26.3416	27.1914	28.0411	28.8908	29.7406	30.5903	31.4400	32.2897
868	.0931	.9429	.7926	.6423	.4921	.3418	.1916	.0413	.8910	.7408	.5905	.4402	.2900
871	.0933	.9430	.7928	.6425	.4923	.3420	.1917	.0415	.8912	.7410	.5907	.4405	.2902
874	.0934	.9432	.7929	.6427	.4924	.3422	.1919	.0417	.8914	.7412	.5909	.4407	.2904
877	.0936	.9434	.7931	.6429	.4926	.3424	.1921	.0419	.8916	.7414	.5911	.4409	.2907
424880	22.0938	22.9435	23.7933	24.6430	25.4928	26.3426	27.1923	28.0421	28.8918	29.7416	30.5914	31.4411	32.2909
883	.0939	.9437	.7934	.6432	.4930	.3427	.1925	.0423	.8920	.7418	.5916	.4413	.2911
886	.0941	.9438	.7936	.6434	.4932	.3429	.1927	.0425	.8922	.7420	.5918	.4416	.2913
889	.0942	.9440	.7938	.6436	.4933	.3431	.1929	.0427	.8925	.7422	.5920	.4418	.2916
892	.0944	.9442	.7940	.6437	.4935	.3433	.1931	.0429	.8927	.7424	.5922	.4420	.2918
424895	22.0945	22.9443	23.7941	24.6439	25.4937	26.3435	27.1933	28.0431	28.8929	29.7427	30.5924	31.4422	32.2920
898	.0947	.9445	.7943	.6441	.4939	.3437	.1935	.0433	.8931	.7429	.5927	.4425	.2922
901	.0949	.9447	.7945	.6443	.4941	.3439	.1937	.0435	.8933	.7431	.5929	.4427	.2925
904	.0950	.9448	.7946	.6444	.4942	.3440	.1939	.0437	.8935	.7433	.5931	.4429	.2927
907	.0952	.9450	.7948	.6446	.4944	.3442	.1940	.0439	.8937	.7435	.5933	.4431	.2929
424910	22.0953	22.9451	23.7950	24.6448	25.4946	26.3444	27.1942	28.0441	28.8939	29.7437	30.5935	31.4433	32.2932
913	.0955	.9453	.7951	.6450	.4948	.3446	.1944	.0443	.8941	.7439	.5937	.4436	.2934
916	.0956	.9455	.7953	.6451	.4950	.3448	.1946	.0445	.8943	.7441	.5940	.4438	.2936
919	.0958	.9456	.7955	.6453	.4951	.3450	.1948	.0447	.8945	.7443	.5942	.4440	.2938
922	.0959	.9458	.7956	.6455	.4953	.3452	.1950	.0449	.8947	.7445	.5944	.4442	.2941
424925	22.0961	22.9460	23.7958	24.6457	25.4955	26.3454	27.1952	28.0451	28.8949	29.7448	30.5946	31.4445	32.2943
928	.0863	.9461	.7960	.6458	.4957	.3455	.1954	.0452	.8951	.7450	.5948	.4447	.2945
931	.0964	.9463	.7961	.6460	.4959	.3457	.1956	.0454	.8953	.7452	.5950	.4449	.2948
934	.0966	.9464	.7963	.6462	.4960	.3459	.1958	.0456	.8955	.7454	.5952	.4451	.2950
937	.0967	.9466	.7965	.6463	.4962	.3461	.1960	.0458	.8957	.7456	.5955	.4453	.2952
424940	22.0969	22.9468	23.7966	24.6465	25.4964	26.3463	27.1962	28.0460	28.8959	29.7458	30.5957	31.4456	32.2954
943	.0970	.9469	.7968	.6467	.4966	.3465	.1964	.0462	.8961	.7460	.5959	.4458	.2957
946	.0972	.9471	.7970	.6469	.4968	.3467	.1965	.0464	.8963	.7462	.5961	.4460	.2959
949	.0973	.9472	.7971	.6470	.4969	.3468	.1967	.0466	.8965	.7464	.5963	.4462	.2961
952	.0975	.9474	.7973	.6472	.4971	.3470	.1969	.0468	.8967	.7466	.5965	.4464	.2964
424955	22.0977	22.9476	23.7975	24.6474	25.4973	26.3472	27.1971	28.0470	28.8969	29.7469	30.5968	31.4467	32.2966
958	.0978	.9477	.7976	.6476	.4975	.3474	.1973	.0472	.8971	.7471	.5970	.4469	.2968
961	.0980	.9479	.7978	.6477	.4977	.3476	.1975	.0474	.8973	.7473	.5972	.4471	.2970
964	.0981	.9481	.7980	.6479	.4978	.3478	.1977	.0476	.8976	.7475	.5974	.4473	.2973
967	.0983	.9482	.7982	.6481	.4980	.3480	.1979	.0478	.8978	.7477	.5976	.4476	.2975
424970	22.0984	22.9484	23.7983	24.6483	25.4982	26.3481	27.1981	28.0480	28.8980	29.7479	30.5978	31.4478	32.2977
973	.0986	.9485	.7985	.6484	.4984	.3483	.1983	.0482	.8982	.7481	.5981	.4480	.2979
976	.0988	.9487	.7987	.6486	.4986	.3485	.1985	.0484	.8984	.7483	.5983	.4482	.2982
979	.0989	.9489	.7988	.6488	.4987	.3487	.1987	.0486	.8986	.7485	.5985	.4484	.2984
982	.0991	.9490	.7990	.6490	.4989	.3489	.1988	.0488	.8988	.7487	.5987	.4487	.2986
424985	22.0992	22.9492	23.7992	24.6491	25.4991	26.3491	27.1990	28.0490	28.8990	29.7490	30.5989	31.4489	32.2989
988	.0994	.9494	.7993	.6493	.4993	.3493	.1992	.0492	.8992	.7492	.5991	.4491	.2991
991	.0995	.9495	.7995	.6495	.4995	.3494	.1994	.0494	.8994	.7494	.5994	.4493	.2993
994	.0997	.9497	.7997	.6497	.4996	.3496	.1996	.0496	.8996	.7496	.5996	.4496	.2995
997	.0998	.9498	.7998	.6498	.4998	.3498	.1998	.0498	.8998	.7498	.5998	.4498	.2998
425000	22.1000	22.9500	23.8000	24.6500	25.5000	26.3500	27.2000	28.0500	28.9000	29.7500	30.6000	31.4500	32.3000

MEGACYCLES PER SECOND

HARMONICS

BASIC FREQ.	78	80	82	84	86	88	90	92	94	96	100	104	108
424700	33.1266	33.9760	34.8254	35.6748	36.5242	37.3736	38.2230	39.0724	39.9218	40.7712	42.4700	44.1688	45.8676
703	.1268	.9762	.8256	.6751	.5245	.3739	.2233	.0727	.9221	.7715	.4703	.1691	.8679
706	.1271	.9765	.8259	.6753	.5247	.3741	.2235	.0730	.9224	.7718	.4706	.1694	.8682
709	.1273	.9767	.8261	.6756	.5250	.3744	.2238	.0732	.9226	.7721	.4709	.1697	.8686
712	.1275	.9770	.8264	.6758	.5252	.3747	.2241	.0735	.9229	.7724	.4712	.1700	.8689
424715	33.1278	33.9772	34.8266	35.6761	36.5255	37.3749	38.2244	39.0738	39.9232	40.7726	42.4715	44.1704	45.8692
718	.1280	.9774	.8269	.6763	.5257	.3752	.2246	.0741	.9235	.7729	.4718	.1707	.8695
721	.1282	.9777	.8271	.6766	.5260	.3754	.2249	.0743	.9238	.7732	.4721	.1710	.8699
724	.1285	.9779	.8274	.6768	.5263	.3757	.2252	.0746	.9241	.7735	.4724	.1713	.8702
727	.1287	.9782	.8276	.6771	.5265	.3760	.2254	.0749	.9243	.7738	.4727	.1716	.8705
424730	33.1289	33.9784	34.8279	35.6773	36.5268	37.3762	38.2257	39.0752	39.9246	40.7741	42.4730	44.1719	45.8708
733	.1292	.9786	.8281	.6776	.5270	.3765	.2260	.0754	.9249	.7744	.4733	.1722	.8712
736	.1294	.9789	.8284	.6778	.5273	.3768	.2262	.0757	.9252	.7747	.4736	.1725	.8715
739	.1296	.9791	.8286	.6781	.5276	.3770	.2265	.0760	.9255	.7749	.4739	.1729	.8718
742	.1299	.9794	.8288	.6783	.5278	.3773	.2268	.0763	.9257	.7752	.4742	.1732	.8721
424745	33.1301	33.9796	34.8291	35.6786	36.5281	37.3776	38.2271	39.0765	39.9260	40.7755	42.4745	44.1735	45.8725
748	.1303	.9798	.8293	.6788	.5283	.3778	.2273	.0768	.9263	.7758	.4748	.1738	.8728
751	.1306	.9801	.8296	.6791	.5286	.3781	.2276	.0771	.9266	.7761	.4751	.1741	.8731
754	.1308	.9803	.8298	.6793	.5288	.3784	.2279	.0774	.9269	.7764	.4754	.1744	.8734
757	.1310	.9806	.8301	.6796	.5291	.3786	.2281	.0776	.9272	.7767	.4757	.1747	.8738
424760	33.1313	33.9808	34.8303	35.6798	36.5294	37.3789	38.2284	39.0779	39.9274	40.7770	42.4760	44.1750	45.8741
763	.1315	.9810	.8306	.6801	.5296	.3791	.2287	.0782	.9277	.7772	.4763	.1754	.8744
766	.1317	.9813	.8308	.6803	.5299	.3794	.2289	.0785	.9280	.7775	.4766	.1757	.8747
769	.1320	.9815	.8311	.6806	.5301	.3797	.2292	.0787	.9283	.7778	.4769	.1760	.8751
772	.1322	.9818	.8313	.6808	.5304	.3799	.2295	.0790	.9286	.7781	.4772	.1763	.8754
424775	33.1325	33.9820	34.8316	35.6811	36.5307	37.3802	38.2298	39.0793	39.9289	40.7784	42.4775	44.1766	45.8757
778	.1327	.9822	.8318	.6814	.5309	.3805	.2300	.0796	.9291	.7787	.4778	.1769	.8760
781	.1329	.9825	.8320	.6816	.5312	.3807	.2303	.0799	.9294	.7790	.4781	.1772	.8763
784	.1332	.9827	.8323	.6819	.5314	.3810	.2306	.0801	.9297	.7793	.4784	.1775	.8767
787	.1334	.9830	.8325	.6821	.5317	.3813	.2308	.0804	.9300	.7796	.4787	.1778	.8770
424790	33.1336	33.9832	34.8328	35.6824	36.5319	37.3815	38.2311	39.0807	39.9303	40.7798	42.4790	44.1782	45.8773
793	.1339	.9834	.8330	.6826	.5322	.3818	.2314	.0810	.9305	.7801	.4793	.1785	.8776
796	.1341	.9837	.8333	.6829	.5325	.3820	.2316	.0812	.9308	.7804	.4796	.1788	.8780
799	.1343	.9839	.8335	.6831	.5327	.3823	.2319	.0815	.9311	.7807	.4799	.1791	.8783
802	.1346	.9842	.8338	.6834	.5330	.3826	.2322	.0818	.9314	.7810	.4802	.1794	.8786
424805	33.1348	33.9844	34.8340	35.6836	36.5332	37.3828	38.2325	39.0821	39.9317	40.7813	42.4805	44.1797	45.8789
808	.1350	.9846	.8343	.6839	.5335	.3831	.2327	.0823	.9320	.7816	.4808	.1800	.8793
811	.1353	.9849	.8345	.6841	.5337	.3834	.2330	.0826	.9322	.7819	.4811	.1803	.8796
814	.1355	.9851	.8347	.6844	.5340	.3836	.2333	.0829	.9325	.7821	.4814	.1807	.8799
817	.1357	.9854	.8350	.6846	.5343	.3839	.2335	.0832	.9328	.7824	.4817	.1810	.8802
424820	33.1360	33.9856	34.8352	35.6849	36.5345	37.3842	38.2338	39.0834	39.9331	40.7827	42.4820	44.1813	45.8806
823	.1362	.9858	.8355	.6851	.5348	.3844	.2341	.0837	.9334	.7830	.4823	.1816	.8809
826	.1364	.9861	.8357	.6854	.5350	.3847	.2343	.0840	.9336	.7833	.4826	.1819	.8812
829	.1367	.9863	.8360	.6856	.5353	.3850	.2346	.0843	.9339	.7836	.4829	.1822	.8815
832	.1369	.9866	.8362	.6859	.5356	.3852	.2349	.0845	.9342	.7839	.4832	.1825	.8819
424835	33.1371	33.9868	34.8365	35.6861	36.5358	37.3855	38.2352	39.0848	39.9345	40.7842	42.4835	44.1828	45.8822
838	.1374	.9870	.8367	.6864	.5361	.3857	.2354	.0851	.9348	.7844	.4838	.1832	.8825
841	.1376	.9873	.8370	.6866	.5363	.3860	.2357	.0854	.9351	.7847	.4841	.1835	.8828
844	.1378	.9875	.8372	.6869	.5366	.3863	.2360	.0856	.9353	.7850	.5844	.1838	.8832
847	.1381	.9878	.8375	.6871	.5368	.3865	.2362	.0859	.9356	.7853	.4847	.1841	.8835
424850	33.1383	33.9880	34.8377	35.6874	36.5371	37.3868	38.2365	39.9862	39.9359	40.7856	42.4850	44.1844	45.8838
853	.1385	.9882	.8379	.6877	.5374	.3871	.2368	.0865	.9362	.7859	.4853	.1847	.8841
856	.1388	.9885	.8382	.6879	.5376	.3873	.2370	.0868	.9365	.7862	.4856	.1850	.8844
859	.1390	.9887	.8384	.6882	.5379	.3876	.2373	.0870	.9367	.7865	.4859	.1853	.8848
862	.1392	.9890	.8387	.6884	.5381	.3879	.2376	.0873	.9370	.7868	.4862	.1856	.8851
424865	33.1395	33.9892	34.8389	35.6887	36.5384	37.3881	38.2379	39.0876	39.9373	40.7870	42.4865	44.1860	45.8854
868	.1397	.9894	.8392	.6889	.5386	.3884	.2381	.0879	.9376	.7873	.4868	.1863	.8857
871	.1399	.9897	.8394	.6892	.5389	.3886	.2384	.0881	.9379	.7876	.4871	.1866	.8861
874	.1402	.9899	.8397	.6894	.5392	.3889	.2387	.0884	.9382	.7879	.4874	.1869	.8864
877	.1404	.9902	.8399	.6897	.5394	.3892	.2389	.0887	.9384	.7882	.4877	.1872	.8867
424880	33.1406	33.9904	34.8402	35.6899	36.5397	37.3894	38.2392	39.0890	39.9387	40.7885	42.4880	44.1875	45.8870
883	.1409	.9906	.8404	.6902	.5399	.3897	.2395	.0892	.9390	.7888	.4883	.1878	.8874
886	.1411	.9909	.8407	.6904	.5402	.3900	.2397	.0895	.9393	.7891	.4886	.1881	.8877
889	.1413	.9911	.8409	.6907	.5405	.3902	.2400	.0898	.9396	.7893	.4889	.1885	.8880
892	.1416	.9914	.8411	.6909	.5407	.3905	.2403	.0901	.9398	.7896	.4892	.1888	.8883
424895	33.1418	33.9916	34.8414	35.6912	36.5410	37.3908	38.2406	39.0903	39.9401	40.7899	42.4895	44.1891	45.8887
898	.1420	.9918	.8416	.6914	.5412	.3910	.2408	.0906	.9404	.7902	.4898	.1894	.8890
901	.1423	.9921	.8419	.6917	.5415	.3913	.2411	.0909	.9407	.7905	.4901	.1897	.8893
904	.1425	.9923	.8421	.6919	.5417	.3916	.2414	.0912	.9410	.7908	.4904	.1900	.8896
907	.1427	.9926	.8424	.6922	.5420	.3918	.2416	.0914	.9413	.7911	.4907	.1903	.8900
424910	33.1430	33.9928	34.8426	35.6924	36.5423	37.3921	38.2419	39.0917	39.9415	40.7914	42.4910	44.1906	45.8903
913	.1432	.9930	.8429	.6927	.5425	.3923	.2422	.0920	.9418	.7916	.4913	.1910	.8906
916	.1434	.9933	.8431	.6929	.5428	.3926	.2424	.0923	.9421	.7919	.4916	.1913	.8909
919	.1437	.9935	.8434	.6932	.5430	.3929	.2427	.0925	.9424	.7922	.4919	.1916	.8913
922	.1439	.9938	.8436	.6934	.5433	.3931	.2430	.0928	.9427	.7925	.4922	.1919	.8916
424925	33.1442	33.9940	34.8439	35.6937	36.5436	37.3934	38.2433	39.0931	39.9430	40.7928	42.4925	44.1922	45.8919
928	.1444	.9942	.8441	.6940	.5438	.3937	.2435	.0934	.9432	.7931	.4928	.1925	.8922
931	.1446	.9945	.8443	.6942	.5441	.3939	.2438	.0937	.9435	.7934	.4931	.1928	.8925
934	.1449	.9947	.8446	.6945	.5443	.3942	.2441	.0939	.9438	.7937	.4934	.1931	.8929
937	.1451	.9950	.8448	.6947	.5446	.3945	.2443	.0942	.9441	.7940	.4937	.1934	.8932
424940	33.1453	33.9952	34.8451	35.6950	36.5448	37.3947	38.2446	39.0945	39.9444	40.7942	42.4940	44.1938	45.8935
943	.1456	.9954	.8453	.6952	.5451	.3950	.2449	.0948	.9446	.7945	.4943	.1941	.8938
946	.1458	.9957	.8456	.6955	.5454	.3952	.2451	.0950	.9449	.7948	.4946	.1944	.8942
949	.1460	.9959	.8458	.6957	.5456	.3955	.2454	.0953	.9452	.7951	.4949	.1947	.8945
952	.1463	.9962	.8461	.6960	.5459	.3958	.2457	.0956	.9455	.7954	.4952	.1950	.8948
424955	33.1465	33.9964	34.8463	35.6962	36.5461	37.3960	38.2460	39.0959	39.9458	40.7957	42.4955	44.1953	45.8951
958	.1467	.9966	.8466	.6965	.5464	.3963	.2462	.0961	.9461	.7960	.4958	.1956	.8955
961	.1470	.9969	.8468	.6967	.5466	.3966	.2465	.0964	.9463	.7963	.4961	.1959	.8958
964	.1472	.9971	.8470	.6970	.5469	.3968	.2468	.0967	.9466	.7965	.4964	.1963	.8961
967	.1474	.9974	.8473	.6972	.5472	.3971	.2470	.0970	.9469	.7968	.4967	.1966	.8964
424970	33.1477	33.9976	34.8475	35.6975	36.5474	37.3974	38.2473	39.0972	39.9472	40.7971	42.4970	44.1969	45.8968
973	.1479	.9978	.8478	.6977	.5477	.3976	.2476	.0975	.9475	.7974	.4973	.1972	.8971
976	.1481	.9981	.8480	.6980	.5479	.3979	.2478	.0988	.9477	.7977	.4976	.1975	.8974
979	.1484	.9983	.8483	.6982	.5482	.3982	.2481	.0981	.9480	.7980	.4979	.1978	.8977
982	.1486	.9986	.8465	.6985	.5485	.3984	.2484	.0983	.9483	.7983	.4982	.1981	.8981
424985	33.1488	33.9988	34.8488	35.6987	36.5487	37.3987	38.2487	39.0986	39.9486	40.7986	42.4985	44.1984	45.8984
988	.1491	.9990	.8490	.6990	.5490	.3989	.2489	.0989	.9489	.7988	.4988	.1988	.8987
991	.1493	.9993	.8493	.6992	.5492	.3992	.2492	.0992	.9492	.7991	.4991	.1991	.8990
994	.1495	.9995	.8495	.6995	.5495	.3995	.2495	.0994	.9494	.7994	.4994	.1994	.8994
997	.1498	.9998	.8498	.6997	.5497	.3997	.2497	.0997	.9497	.7997	.4997	.1997	.8997
425000	33.1500	34.0000	34.8500	35.7000	36.5500	37.4000	38.2500	39.1000	39.9500	40.8000	42.5000	44.2000	45.9000

HARMONICS

BASIC FREQ.	52	54	56	58	60	62	64	66	68	70	72	74	76
425000	22.1000	22.9500	23.8000	24.6500	25.5000	26.3500	27.2000	28.0500	28.9000	29.7500	30.6000	31.4500	32.3000
003	.1002	.9502	.8002	.6502	.5002	.3502	.2002	.0502	.9002	.7502	.6002	.4502	.3002
006	.1003	.9503	.8003	.6503	.5004	.3504	.2004	.0504	.9004	.7504	.6004	.4504	.3005
009	.1005	.9505	.8005	.6505	.5005	.3506	.2006	.0506	.9006	.7506	.6006	.4507	.3007
012	.1006	.9506	.8007	.6507	.5007	.3507	.2008	.0508	.9008	.7508	.6009	.4509	.3006
425015	22.1008	22.9508	23.8008	24.6509	25.5009	26.3509	27.2010	28.0510	28.9010	29.7511	30.6011	31.4511	32.3011
018	.1009	.9510	.8010	.6510	.5011	.3511	.2012	.0512	.9012	.7513	.6013	.4513	.3014
021	.1011	.9511	.8012	.6512	.5013	.3513	.2013	.0514	.9014	.7515	.6015	.4516	.3016
024	.1012	.9513	.8013	.6514	.5014	.3515	.2015	.0516	.9016	.7517	.6017	.4518	.3018
027	.1014	.9515	.8015	.6516	.5016	.3517	.2017	.0518	.9018	.7519	.6019	.4520	.3021
425030	22.1016	22.9516	23.8017	24.6517	25.5018	26.3519	27.2019	28.0520	28.9020	29.7521	30.6022	31.4522	32.3023
033	.1017	.9518	.8018	.6519	.5020	.3520	.2021	.0522	.9022	.7523	.6024	.4524	.3025
036	.1019	.9519	.8020	.6521	.5022	.3522	.2023	.0524	.9024	.7525	.6026	.4527	.3027
039	.1020	.9521	.8022	.6523	.5023	.3524	.2025	.0526	.9027	.7527	.6028	.4529	.3030
042	.1022	.9523	.8024	.6524	.5025	.3526	.2027	.0528	.9029	.7529	.6030	.4531	.3032
425045	22.1023	22.9524	23.8025	24.6526	25.5027	26.3528	27.2029	28.0530	28.9031	29.7532	30.6032	31.4533	32.3034
048	.1025	.9526	.8027	.6528	.5029	.3530	.2031	.0532	.9033	.7534	.6035	.4536	.3036
051	.1027	.8528	.8029	.6530	.5031	.3532	.2033	.0534	.9035	.7536	.6037	.4538	.3039
054	.1028	.9529	.8030	.6531	.5032	.3533	.2035	.0536	.9037	.7538	.6039	.4540	.3041
057	.1030	.9531	.8032	.6533	.5034	.3535	.2036	.0538	.9039	.7540	.6041	.4542	.3043
425060	22.1031	22.9532	23.8034	24.6535	25.5036	26.3537	27.2038	28.0540	28.9041	29.7542	30.6043	31.4544	32.3046
063	.1033	.9534	.8035	.6537	.5038	.3539	.2040	.0542	.9043	.7544	.6045	.4547	.3048
066	.1034	.9536	.8037	.6538	.5040	.3541	.2042	.0544	.9045	.7546	.6048	.4549	.3050
069	.1036	.9537	.8039	.6540	.5041	.3543	.2044	.0546	.9047	.7548	.6050	.4551	.3052
072	.1037	.9539	.8040	.6542	.5043	.3545	.2046	.0548	.9049	.7550	.6052	.4553	.3055
425075	22.1039	22.9541	23.8042	24.6544	25.5045	26.3547	27.2048	28.0550	28.9051	29.7553	30.6054	31.4556	32.3057
078	.1041	.9542	.8044	.6545	.5047	.3548	.2050	.0551	.9053	.7555	.6056	.4558	.3059
081	.1042	.9544	.8045	.6547	.5049	.3550	.2052	.0553	.9055	.7557	.6058	.4560	.3062
084	.1044	.9545	.8047	.6549	.5050	.3552	.2054	.0555	.9057	.7559	.6060	.4562	.3064
087	.1045	.9547	.8049	.6550	.5052	.3554	.2056	.0557	.9059	.7561	.6063	.4564	.3066
425090	22.1047	22.9549	23.8050	24.6552	25.5054	26.3556	27.2058	28.0559	28.9061	29.7563	30.6065	31.4567	32.3068
093	.1048	.9550	.8052	.6554	.5056	.3558	.2060	.0561	.9063	.7565	.6067	.4569	.3071
096	.1050	.9552	.8054	.6556	.5058	.3560	.2061	.0563	.9065	.7567	.6069	.4571	.3073
099	.1051	.9553	.8055	.6557	.5059	.3561	.2063	.0565	.9067	.7569	.6071	.4573	.3075
102	.1053	.9555	.8057	.6559	.5061	.3563	.2065	.0567	.9069	.7571	.6073	.4575	.3078
425105	22.1055	22.9557	23.8059	24.6561	25.5063	26.3565	27.2067	28.0569	28.9071	29.7574	30.6076	31.4578	32.3080
108	.1056	.9558	.8060	.6563	.5065	.3567	.2069	.0571	.9073	.7576	.6078	.4580	.3082
111	.1058	.9560	.8062	.6564	.5067	.3569	.2071	.0573	.9075	.7578	.6080	.4582	.3084
114	.1059	.9562	.8064	.6566	.5068	.3571	.2073	.0575	.9078	.7580	.6082	.4584	.3087
117	.1061	.9563	.8066	.6568	.5070	.3573	.2075	.0577	.9080	.7582	.6084	.4587	.3089
425120	22.1062	22.9565	23.8067	24.6570	25.5072	26.3574	27.2077	28.0579	28.9082	29.7584	30.6086	31.4589	32.3091
123	.1064	.9566	.8069	.6571	.5074	.3576	.2079	.0581	.9084	.7586	.6089	.4591	.3093
126	.1066	.9568	.8071	.6573	.5076	.3578	.2081	.0583	.9086	.7588	.6091	.4593	.3096
129	.1067	.9570	.8072	.6575	.5077	.3580	.2083	.0585	.9088	.7590	.6093	.4595	.3098
132	.1069	.9571	.8074	.6577	.5079	.3582	.2084	.0587	.9090	.7592	.6095	.4598	.3100
425135	22.1070	22.9573	23.8076	24.6578	25.5081	26.3584	27.2086	28.0589	28.9092	29.7595	30.6097	31.4600	32.3103
138	.1072	.9575	.8077	.6580	.5083	.3586	.2088	.0591	.9094	.7597	.6099	.4602	.3105
141	.1073	.9576	.8079	.6582	.5085	.3587	.2090	.0593	.9096	.7599	.6102	.4604	.3107
144	.1075	.9578	.8081	.6584	.5086	.3589	.2092	.0595	.9098	.7601	.6104	.4607	.3109
147	.1076	.9579	.8082	.6585	.5088	.3591	.2094	.0597	.9100	.7603	.6106	.4609	.3112
425150	22.1078	22.9581	23.8084	24.6587	25.5090	26.3593	27.2096	28.0599	28.9102	29.7605	30.6108	31.4611	32.3114
153	.1080	.9583	.8086	.6589	.5092	.3595	.2098	.0601	.9104	.7607	.6110	.4613	.3116
156	.1081	.9584	.8087	.6590	.5094	.3597	.2100	.0603	.9106	.7609	.6112	.4615	.3119
159	.1083	.9586	.8089	.6592	.5095	.3599	.2102	.0605	.9108	.7611	.6114	.4618	.3121
162	.1084	.9587	.8091	.6594	.5097	.3600	.2104	.0607	.9110	.7613	.6117	.4620	.3123
425165	22.1086	22.9589	23.8092	24.6596	25.5099	26.3602	27.2106	28.0609	28.9112	29.7616	30.6119	31.4622	32.3125
168	.1087	.9591	.8094	.6597	.5101	.3604	.2108	.0611	.9114	.7618	.6121	.4624	.3128
171	.1089	.9592	.8096	.6599	.5103	.3606	.2109	.0613	.9116	.7620	.6123	.4627	.3130
174	.1090	.9594	.8097	.6601	.5104	.3608	.2111	.0615	.9118	.7622	.6125	.4629	.3132
177	.1092	.9596	.8099	.6603	.5106	.3610	.2113	.0617	.9120	.7624	.6127	.4631	.3135
425180	22.1094	22.9597	23.8101	24.6604	25.5108	26.3612	27.2115	28.0619	28.9122	29.7626	30.6130	31.4633	32.3137
183	.1095	.9599	.8102	.6606	.5110	.3613	.2117	.0621	.9124	.7628	.6132	.4635	.3139
186	.1097	.9600	.8104	.6608	.5112	.3615	.2119	.0623	.9126	.7630	.6134	.4638	.3141
189	.1098	.9602	.8106	.6610	.5113	.3617	.2121	.0625	.9129	.7632	.6136	.4640	.3144
192	.1100	.9604	.8108	.6611	.5115	.3619	.2123	.0627	.9131	.7634	.6138	.4642	.3146
425195	22.1101	22.9605	23.8109	24.6613	25.5117	26.3621	27.2125	28.0629	28.9133	29.7637	30.6140	31.4644	32.3148
198	.1103	.9607	.8111	.6615	.5119	.3623	.2127	.0631	.9135	.7639	.6143	.4647	.3150
201	.1105	.9609	.8113	.6617	.5121	.3625	.2129	.0633	.9137	.7641	.6145	.4649	.3153
204	.1106	.9610	.8114	.6618	.5122	.3626	.2131	.0635	.9139	.7643	.6147	.4651	.3155
207	.1108	.9612	.8116	.6620	.5124	.3628	.2132	.0637	.9141	.7645	.6149	.4653	.3157
425210	22.1109	22.9613	23.8118	24.6622	25.5126	26.3630	27.2134	28.0639	28.9143	29.7647	30.6151	31.4655	32.3160
213	.1111	.9615	.8119	.6624	.5128	.3632	.2136	.0641	.9145	.7649	.6153	.4658	.3162
216	.1112	.9617	.8121	.6625	.5130	.3634	.2138	.0643	.9147	.7651	.6156	.4660	.3164
219	.1114	.9618	.8123	.6627	.5131	.3636	.2140	.0645	.9149	.7653	.6158	.4662	.3166
222	.1115	.9620	.8124	.6629	.5133	.3638	.2142	.0647	.9151	.7655	.6160	.4664	.3169
425225	22.1117	22.9622	23.8126	24.6631	25.5135	26.3640	27.2144	28.0649	28.9153	29.7658	30.6162	31.4667	32.3171
228	.1119	.9623	.8128	.6632	.5137	.3641	.2146	.0650	.9155	.7660	.6164	.4669	.3173
231	.1120	.9625	.8129	.6634	.5139	.3643	.2148	.0652	.9157	.7662	.6166	.4671	.3176
234	.1122	.9626	.8131	.6636	.5140	.3645	.2150	.0654	.9159	.7664	.6168	.4673	.3178
237	.1123	.9628	.8133	.6637	.5142	.3647	.2152	.0656	.9161	.7666	.6171	.4675	.3180
425240	22.1125	22.9630	23.8134	24.6639	25.5144	26.3649	27.2154	28.0658	28.9163	29.7668	30.6173	31.4678	32.3182
243	.1126	.9631	.8136	.6641	.5146	.3651	.2156	.0660	.9165	.7670	.6175	.4680	.3185
246	.1128	.9633	.8138	.6643	.5148	.3653	.2157	.0662	.9167	.7672	.6177	.4682	.3187
249	.1129	.9634	.8139	.6644	.5149	.3654	.2159	.0664	.9169	.7674	.6179	.4684	.3189
252	.1131	.9636	.8141	.6646	.5151	.3656	.2161	.0666	.9171	.7676	.6181	.4686	.3192
425255	22.1133	22.9638	23.8143	24.6648	25.5153	26.3658	27.2163	28.0668	28.9173	29.7679	30.6184	31.4689	32.3194
258	.1134	.9639	.8144	.6650	.5155	.3660	.2165	.0670	.9175	.7681	.6186	.4691	.3196
261	.1136	.9641	.8146	.6651	.5157	.3662	.2167	.0672	.9177	.7683	.6188	.4693	.3198
264	.1137	.9643	.8148	.6653	.5158	.3664	.2169	.0674	.9180	.7685	.6190	.4695	.3201
267	.1139	.9644	.8150	.6655	.5160	.3666	.2171	.0676	.9182	.7687	.6192	.4698	.3203
425270	22.1140	22.9646	23.8151	24.6657	25.5162	26.3667	27.2173	28.0678	28.9184	29.7689	30.6194	31.4700	32.3205
273	.1142	.9647	.8153	.6658	.5164	.3669	.2175	.0680	.9186	.7691	.6197	.4702	.3207
276	.1144	.9649	.8155	.6660	.5166	.3671	.2177	.0682	.9188	.7693	.6199	.4704	.3210
279	.1145	.9651	.8156	.6662	.5167	.3673	.2179	.0684	.9190	.7695	.6201	.4706	.3212
282	.1147	.9652	.8158	.6664	.5169	.3675	.2180	.0686	.9192	.7697	.6203	.4709	.3214
425285	22.1148	22.9654	23.8160	24.6665	25.5171	26.3677	27.2182	28.0688	28.9194	29.7700	30.6205	31.4711	32.3217
288	.1150	.9656	.8161	.6667	.5173	.3679	.2184	.0690	.9196	.7702	.6207	.4713	.3219
291	.1151	.9657	.8163	.6669	.5175	.3680	.2186	.0692	.9198	.7704	.6210	.4715	.3221
294	.1153	.9659	.8165	.6671	.5176	.3682	.2188	.0694	.9200	.7706	.6212	.4718	.3223
297	.1154	.9660	.8166	.6672	.5178	.3684	.2190	.0696	.9202	.7708	.6214	.4720	.3226
425300	22.1156	22.9662	23.8168	24.6674	25.5180	26.3686	27.2192	28.0698	28.9204	29.7710	30.6216	31.4722	32.3228

MEGACYCLES PER SECOND

HARMONICS

BASIC FREQ.	78	80	82	84	86	88	90	92	94	96	100	104	108
425000	33.1500	34.0000	34.8500	35.7000	36.5500	37.4000	38.2500	39.1000	39.9500	40.8000	42.5000	44.2000	45.9000
003	.1502	.0002	.8502	.7003	.5503	.4003	.2503	.1003	.9503	.8003	.5003	.2003	.9003
006	.1505	.0005	.8505	.7005	.5505	.4005	.2505	.1006	.9506	.8006	.5006	.2006	.9006
009	.1507	.0007	.8507	.7008	.5508	.4008	.2508	.1008	.9508	.8009	.5009	.2009	.9010
012	.1509	.0010	.8510	.7010	.5510	.4011	.2511	.1011	.9511	.8012	.5012	.2012	.9013
425015	33.1512	34.0012	34.8512	35.7013	36.5513	37.4013	38.2514	39.1014	39.9514	40.8014	42.5015	44.2016	45.9016
018	.1514	.0014	.8515	.7015	.5515	.4016	.2516	.1017	.9517	.8017	.5018	.2019	.9019
021	.1516	.0017	.8517	.7018	.5518	.4018	.2519	.1019	.9520	.8020	.5021	.2022	.9023
024	.1519	.0019	.8520	.7020	.5521	.4021	.2522	.1022	.9523	.8023	.5024	.2025	.9026
027	.1521	.0022	.8522	.7023	.5523	.4024	.2524	.1025	.9525	.8026	.5027	.2028	.9029
425030	33.1523	34.0024	34.8525	35.7025	36.5526	37.4026	38.2527	39.1028	39.9528	40.8029	42.5030	44.2031	45.9032
033	.1526	.0026	.8527	.7028	.5528	.4029	.2530	.1030	.9531	.8032	.5033	.2034	.9036
036	.1528	.0029	.8530	.7030	.5531	.4032	.2532	.1033	.9534	.8035	.5036	.2037	.9039
039	.1530	.0031	.8522	.7033	.5534	.4034	.2535	.1036	.9537	.8037	.5039	.2041	.9042
042	.1533	.0034	.8534	.7035	.5536	.4037	.2538	.1039	.9539	.8040	.5042	.2044	.9045
425045	33.1535	34.0036	34.8537	35.7038	36.5539	37.4040	38.2541	39.1041	39.9542	40.8043	42.5045	44.2047	45.9049
048	.1537	.0038	.8539	.7040	.5541	.4042	.2543	.1044	.9545	.8046	.5048	.2050	.9052
051	.1540	.0041	.8542	.7043	.5544	.4045	.2546	.1047	.9548	.8049	.5051	.2053	.9055
054	.1542	.0043	.8544	.7045	.5546	.4048	.2549	.1050	.9551	.8052	.5054	.2056	.9058
057	.1544	.0046	.8547	.7048	.5549	.4050	.2551	.1052	.9554	.8055	.5057	.2059	.9062
425060	33.1547	34.0048	34.8549	35.7050	36.5552	37.4053	38.2554	39.1055	39.9556	40.8058	42.5060	44.2062	45.9065
063	.1549	.0050	.8552	.7053	.5554	.4055	.2557	.1058	.9559	.8060	.5063	.2066	.9068
066	.1551	.0053	.8554	.7055	.5557	.4058	.2559	.1061	.9562	.8063	.5066	.2069	.9071
069	.1554	.0055	.8557	.7058	.5559	.4061	.2562	.1063	.9565	.8066	.5069	.2072	.9075
072	.1556	.0058	.8559	.7060	.5562	.4063	.2565	.1066	.9568	.8069	.5072	.2075	.9078
425075	33.1559	34.0060	34.8562	35.7063	36.5565	37.4066	38.2568	39.1069	39.9571	40.8072	42.5075	44.2078	45.9081
078	.1561	.0062	.8564	.7066	.5567	.4069	.2570	.1072	.9573	.8075	.5078	.2081	.9084
081	.1563	.0065	.8566	.7068	.5570	.4071	.2573	.1075	.9576	.8078	.5081	.2084	.9087
084	.1566	.0067	.8569	.7071	.5572	.4074	.2576	.1077	.9579	.8081	.5084	.2087	.9091
087	.1568	.0070	.8571	.7073	.5575	.4077	.2578	.1080	.9582	.8084	.5087	.2090	.9094
425090	33.1570	34.0072	34.8574	35.7076	36.5577	37.4079	38.2581	39.1083	39.9585	40.8086	42.5090	44.2094	45.9097
093	.1573	.0074	.8576	.7078	.5580	.4082	.2584	.1086	.9587	.8089	.5093	.2097	.9100
096	.1575	.0077	.8579	.7081	.5583	.4084	.2586	.1088	.9590	.8092	.5096	.2100	.9104
099	.1577	.0079	.8581	.7083	.5585	.4087	.2589	.1091	.9593	.8095	.5099	.2103	.9107
102	.1580	.0082	.8584	.7086	.5588	.4090	.2592	.1094	.9596	.8098	.5102	.2106	.9110
425105	33.1582	34.0084	34.8586	35.7088	36.5590	37.4092	38.2595	39.1097	39.9599	40.8101	42.5105	44.2109	45.9113
108	.1584	.0086	.8589	.7091	.5593	.4095	.2597	.1099	.9602	.8104	.5108	.2112	.9117
111	.1587	.0089	.8591	.7093	.5595	.4098	.2600	.1102	.9604	.8107	.5111	.2115	.9120
114	.1589	.0091	.8593	.7096	.5598	.4100	.2603	.1105	.9607	.8109	.5114	.2119	.9123
117	.1591	.0094	.8596	.7098	.5601	.4103	.2605	.1108	.9610	.8112	.5117	.2122	.9126
425120	33.1594	34.0096	34.8598	35.7101	36.5603	37.4106	38.2608	39.1110	39.9613	40.8115	42.5120	44.2125	45.9130
123	.1596	.0098	.8601	.7103	.5606	.4108	.2611	.1113	.9616	.8118	.5123	.2128	.9133
126	.1598	.0101	.8603	.7106	.5608	.4111	.2613	.1116	.9618	.8121	.5126	.2131	.9136
129	.1601	.0103	.8606	.7108	.5611	.4114	.2616	.1119	.9621	.8124	.5129	.2134	.9139
132	.1603	.0106	.8608	.7111	.5614	.4116	.2619	.1121	.9624	.8127	.5132	.2137	.9143
425135	33.1605	34.0108	34.8611	35.7113	36.5616	37.4119	38.2622	39.1124	39.9627	40.8130	42.5135	44.2140	45.9146
138	.1608	.0110	.8613	.7116	.5619	.4121	.2624	.1127	.9630	.8132	.5138	.2144	.9149
141	.1610	.0113	.8616	.7118	.5621	.4124	.2627	.1130	.9633	.8135	.5141	.3147	.9152
144	.1612	.0115	.8618	.7121	.5624	.4127	.2630	.1132	.9635	.8138	.5144	.2150	.9156
147	.1615	.0118	.8621	.7123	.5626	.4129	.2632	.1135	.9638	.8141	.5147	.2153	.9159
425150	33.1617	34.0120	34.8623	35.7126	36.5629	37.4132	38.2635	39.1138	39.9641	40.8144	42.5150	44.2156	45.9162
153	.1619	.0122	.8625	.7129	.5632	.4135	.2638	.1141	.9644	.8147	.5153	.2159	.9165
156	.1622	.0125	.8628	.7131	.5634	.4137	.2640	.1144	.9647	.8150	.5156	.2162	.9168
159	.1624	.0127	.8630	.7134	.5637	.4140	.2643	.1146	.9649	.8153	.5159	.2165	.9162
162	.1626	.0130	.8633	.7136	.5639	.4143	.2646	.1149	.9652	.8156	.5162	.2168	.9175
425165	33.1629	34.0132	34.8635	35.7139	36.5642	37.4145	38.2649	39.1152	39.9655	40.8158	42.5165	44.2172	45.9178
168	.1631	.0134	.8638	.7141	.5644	.4148	.2651	.1155	.9658	.8161	.5168	.2175	.9181
171	.1633	.0137	.8640	.7144	.5647	.4150	.2654	.1157	.9661	.8164	.5171	.2178	.9185
174	.1636	.0139	.8643	.7146	.5650	.4153	.2657	.1160	.9664	.8167	.5174	.2181	.9188
177	.1638	.0142	.8645	.7149	.5652	.4156	.2659	.1163	.9666	.8170	.5177	.2184	.9191
425180	33.1640	34.0144	34.8648	35.7151	36.5655	37.4158	38.2662	39.1166	39.9669	40.8173	42.5180	44.2187	45.9194
183	.1643	.0146	.8650	.7154	.5657	.4161	.2665	.1168	.9672	.8176	.5183	.2190	.9198
186	.1645	.0149	.8653	.7156	.5660	.4164	.2667	.1171	.9675	.8179	.5186	.2193	.9201
189	.1647	.0151	.8655	.7159	.5663	.4166	.2670	.1174	.9678	.8181	.5189	.2197	.9204
192	.1650	.0154	.8657	.7161	.5665	.4169	.2673	.1177	.9680	.8184	.5192	.2200	.9207
425195	33.1652	34.0156	34.8660	35.7164	36.5668	37.4172	38.2676	39.1179	39.9683	40.8187	42.5195	44.2203	45.9211
198	.1654	.0158	.8662	.7166	.5670	.4174	.2678	.1182	.9686	.8190	.5198	.2206	.9214
201	.1657	.0161	.8665	.7169	.5673	.4177	.2681	.1185	.9689	.8193	.5201	.2209	.9217
204	.1659	.0163	.8667	.7171	.5675	.4180	.2684	.1188	.9692	.8196	.5204	.2212	.9220
207	.1661	.0166	.8670	.7174	.5678	.4182	.2686	.1190	.9695	.8199	.5207	.2215	.9224
425210	33.1664	34.0168	34.8672	35.7176	36.5681	37.4185	38.2689	39.1193	39.9697	40.8202	42.5210	44.2218	45.9227
213	.1666	.0170	.8675	.7179	.5683	.4187	.2692	.1196	.9700	.8204	.5213	.2222	.9230
216	.1668	.0173	.8677	.7181	.5686	.4190	.2694	.1199	.9703	.8207	.5216	.2225	.9233
219	.1671	.0175	.8680	.7184	.5688	.4193	.2697	.1201	.9706	.8210	.5219	.2228	.9237
222	.1673	.0178	.8682	.7186	.5691	.4195	.2700	.1204	.9709	.8213	.5222	.2231	.9240
425225	33.1676	34.0180	34.8685	35.7189	36.5694	37.4198	38.2703	39.1207	39.9712	40.8216	42.5225	44.2234	45.9243
228	.1678	.0182	.8687	.7192	.5696	.4201	.2705	.1210	.9714	.8219	.5228	.2237	.9246
231	.1680	.0185	.8689	.7194	.5699	.4203	.2708	.1213	.9717	.8222	.5231	.2240	.9249
234	.1683	.0187	.8692	.7197	.5701	.4206	.2711	.1215	.9720	.8225	.5234	.2243	.9253
237	.1685	.0190	.8694	.7199	.5704	.4209	.2713	.1218	.9723	.8228	.5237	.2246	.9256
425240	33.1687	34.0192	34.8697	35.7202	36.5706	37.4211	38.2716	39.1221	39.9726	40.8230	42.5240	44.2250	45.9259
243	.1690	.0194	.8699	.7204	.5709	.4214	.2719	.1224	.9728	.8233	.5243	.2253	.9262
246	.1692	.0197	.8702	.7207	.5712	.4216	.2721	.1226	.9731	.8236	.5246	.2256	.9266
249	.1694	.0199	.8704	.7209	.5714	.4219	.2724	.1229	.9734	.8239	.5249	.2259	.9269
252	.1697	.0202	.8707	.7212	.5717	.4222	.2727	.1232	.9737	.8242	.5252	.2262	.9272
425255	33.1699	34.0204	34.8709	35.7214	36.5719	37.4224	38.2730	39.1235	39.9740	40.8245	42.5255	44.2265	45.9275
258	.1701	.0206	.8712	.7217	.5722	.4227	.2732	.1237	.9743	.8248	.5258	.2268	.9279
261	.1704	.0209	.8714	.7219	.5724	.4230	.2735	.1240	.9745	.8251	.5261	.2271	.9282
264	.1706	.0211	.8716	.7222	.5727	.4232	.2738	.1243	.9748	.8253	.5264	.2275	.9285
267	.1708	.0214	.8719	.7224	.5730	.4235	.2740	.1246	.9751	.8256	.5267	.2278	.9288
425270	33.1711	34.0216	34.8721	35.7227	36.5732	37.4238	38.2743	39.1248	39.9754	40.8259	42.5270	44.2281	45.9292
273	.1713	.0218	.8724	.7229	.5735	.4240	.2746	.1251	.9757	.8262	.5273	.2284	.9295
276	.1715	.0221	.8726	.7232	.5737	.4243	.2748	.1254	.9759	.8265	.5276	.2287	.9298
279	.1718	.0223	.8729	.7234	.5740	.4246	.2751	.1257	.9762	.8268	.5279	.2290	.9301
282	.1720	.0226	.8731	.7237	.5743	.4248	.2754	.1259	.9765	.8271	.5282	.2293	.9305
425285	33.1722	34.0228	34.8734	35.7239	36.5745	37.4251	38.2757	39.1262	39.9768	40.8274	42.5285	44.2296	45.9308
288	.1725	.0230	.8736	.7242	.5748	.4253	.2759	.1265	.9771	.8276	.5288	.2300	.9311
291	.1727	.0233	.8739	.7244	.5750	.4256	.2762	.1268	.9774	.8279	.5291	.2303	.9314
294	.1729	.0235	.8741	.7247	.5753	.4259	.2765	.1270	.9776	.8282	.5294	.2306	.9318
297	.1732	.0238	.8744	.7249	.5755	.4261	.2767	.1273	.9779	.8285	.5297	.2309	.9321
425300	33.1734	34.0240	34.8746	35.7252	36.5758	37.4264	38.2770	39.1276	39.9782	40.8288	42.5300	44.2312	45.9324

BASIC FREQ.	52	54	56	58	60	62	64	66	68	70	72	74	76
425300	22.1156	22.9662	23.8168	24.6674	25.5180	26.3686	27.2192	28.0698	28.9204	29.7710	30.6216	31.4722	32.3228
303	.1158	.9664	.8170	.6676	.5182	.3688	.2194	.0700	.9206	.7712	.6218	.4724	.3230
306	.1159	.9665	.8171	.6677	.5184	.3690	.2196	.0702	.9208	.7714	.6220	.4726	.3233
309	.1161	.9667	.8173	.6679	.5185	.3692	.2198	.0704	.9210	.7716	.6222	.4729	.3235
312	.1162	.9668	.8175	.6681	.5187	.3693	.2200	.0706	.9212	.7718	.6225	.4731	.3237
425315	22.1164	22.9670	23.8176	24.6683	25.5189	26.3695	27.2202	28.0708	28.9214	29.7721	30.6227	31.4733	32.3239
318	.1165	.9672	.8178	.6684	.5191	.3697	.2204	.0710	.9216	.7723	.6229	.4735	.3242
321	.1167	.0673	.8180	.6686	.5193	.3699	.2205	.0712	.9218	.7725	.6231	.4738	.3244
324	.1168	.9675	.8181	.6688	.5194	.3701	.2207	.0714	.9220	.7727	.6233	.4740	.3246
327	.1170	.9677	.8183	.6690	.5196	.3703	.2209	.0716	.9222	.7729	.6235	.4742	.3249
425330	22.1172	22.9678	23.8185	24.6691	25.5198	26.3705	27.2211	28.0718	28.9224	29.7731	30.6238	31.4744	32.3251
333	.1173	.9680	.8186	.6693	.5200	.3706	.2213	.0720	.9226	.7733	.6240	.4746	.3253
336	.1175	.9681	.8188	.6695	.5202	.3708	.2215	.0722	.9228	.7735	.6242	.4749	.3255
339	.1176	.9683	.8190	.6697	.5203	.3710	.2217	.0724	.9231	.7737	.6244	.4751	.3258
342	.1178	.9685	.8192	.6698	.5205	.3712	.2219	.0726	.9233	.7739	.6246	.4753	.3260
425345	22.1179	22.9686	23.8193	24.6700	25.5207	26.3714	27.2221	28.0728	28.9235	29.7742	30.6248	31.4755	32.3262
348	.1181	.9688	.8195	.6702	.5209	.3716	.2223	.0730	.9237	.7744	.6251	.4758	.3264
351	.1183	.9690	.8197	.6704	.5211	.3718	.2225	.0732	.9239	.7746	.6253	.4760	.3267
354	.1184	.9691	.8198	.6705	.5212	.3719	.2227	.0734	.9241	.7748	.6255	.4762	.3269
357	.1186	.9693	.8200	.6707	.5214	.3721	.2228	.0736	.9243	.7750	.6257	.4764	.3271
425360	22.1187	22.9694	23.8202	24.6709	25.5216	26.3723	27.2230	28.0738	28.9245	29.7752	30.6259	31.4766	32.3274
363	.1189	.9696	.8203	.6711	.5218	.3725	.2232	.0740	.9247	.7754	.6261	.4769	.3276
366	.1190	.9698	.8205	.6712	.5220	.3727	.2234	.0742	.9249	.7756	.6264	.4771	.3278
369	.1192	.9699	.8207	.6714	.5221	.3729	.2236	.0744	.9251	.7758	.6266	.4773	.3280
372	.1193	.9701	.8208	.6716	.5223	.3731	.2238	.0746	.9253	.7760	.6268	.4775	.3283
425375	22.1195	22.9703	23.8210	24.6718	25.5225	26.3733	27.2240	28.0748	28.9255	29.7763	30.6270	31.4778	32.3285
378	.1197	.9704	.8212	.6719	.5227	.3734	.2242	.0749	.9257	.7765	.6272	.4780	.3287
381	.1198	.9706	.8213	.6721	.5229	.3736	.2244	.0751	.9259	.7767	.6274	.4782	.3290
384	.1200	.9707	.8215	.6723	.5230	.3738	.2246	.0753	.9261	.7769	.6276	.4784	.3292
387	.1201	.9709	.8217	.6724	.5232	.3740	.2248	.0755	.9263	.7771	.6279	.4786	.3294
425390	22.1203	22.9711	23.8218	24.6726	25.5234	26.3742	27.2250	28.0757	28.9265	29.7773	30.6281	31.4789	32.3296
393	.1204	.9712	.8220	.6728	.5236	.3744	.2252	.0759	.9267	.7775	.6283	.4791	.3299
396	.1206	.9714	.8222	.6730	.5238	.3746	.2253	.0761	.9269	.7777	.6285	.4793	.3301
399	.1207	.9715	.8223	.6731	.5239	.3747	.2255	.0763	.9271	.7779	.6287	.4795	.3303
402	.1209	.9717	.8225	.6733	.5241	.3749	.2257	.0765	.9273	.7781	.6289	.4797	.3306
425405	22.1211	22.9719	23.8227	24.6735	25.5243	26.3751	27.2259	28.0767	28.9275	29.7784	30.6292	31.4800	32.3308
408	.1212	.9720	.8228	.6737	.5245	.3753	.2261	.0769	.9277	.7786	.6294	.4802	.3310
411	.1214	.9722	.8230	.6738	.5247	.3755	.2263	.0771	.9279	.7788	.6296	.4804	.3312
414	.1215	.9724	.8232	.6740	.5248	.3757	.2265	.0773	.9282	.7790	.6298	.4806	.3315
417	.1217	.9725	.8234	.6742	.5250	.3759	.2267	.0775	.9284	.7792	.6300	.4809	.3317
425420	22.1218	22.9727	23.8235	24.6744	25.5252	26.3760	27.2269	28.0777	28.9286	29.7794	30.6302	31.4811	32.3319
423	.1220	.9728	.8237	.6745	.5254	.3762	.2271	.0779	.9288	.7796	.6305	.4813	.3321
426	.1222	.9730	.8239	.6747	.5256	.3764	.2273	.0781	.9290	.7798	.6307	.4815	.3324
429	.1223	.9732	.8240	.6749	.5257	.3766	.2275	.0783	.9292	.7800	.6309	.4817	.3326
432	.1225	.9733	.8242	.6751	.5259	.3768	.2276	.0785	.9294	.7802	.6311	.4820	.3328
425435	22.1226	22.9735	23.8244	24.6752	25.5261	26.3770	27.2278	28.0787	28.9296	29.7805	30.6313	31.4822	32.3331
438	.1228	.9737	.8245	.6754	.5263	.3772	.2280	.0789	.9298	.7807	.6315	.4824	.3333
441	.1229	.9738	.8247	.6756	.5265	.3773	.2282	.0791	.9300	.7809	.6318	.4826	.3335
444	.1231	.9740	.8249	.6758	.5266	.3775	.2284	.0793	.9302	.7811	.6320	.4829	.3337
447	.1232	.9741	.8250	.6759	.5268	.3777	.2286	.0795	.9304	.7813	.6322	.4831	.3340
425450	22.1234	22.9743	23.8252	24.6761	25.5270	26.3779	27.2288	28.0797	28.9306	29.7815	30.6324	31.4833	32.3342
453	.1236	.9745	.8254	.6763	.5272	.3781	.2290	.0799	.9308	.7817	.6326	.4835	.3344
456	.1237	.9746	.8255	.6764	.5274	.3783	.2292	.0801	.9310	.7819	.6328	.4837	.3347
459	.1239	.9748	.8257	.6766	.5275	.3785	.2294	.0803	.9312	.7821	.6330	.4840	.3349
462	.1240	.9749	.8259	.6768	.5277	.3786	.2296	.0805	.9314	.7823	.6333	.4842	.3351
425465	22.1242	22.9751	23.8260	24.6770	25.5279	26.3788	27.2298	28.0807	28.9316	29.7826	30.6335	31.4844	32.3353
468	.1243	.9753	.8262	.6771	.5281	.3790	.2300	.0809	.9318	.7828	.6337	.4846	.3356
471	.1245	.9754	.8264	.6773	.5283	.3792	.2301	.0811	.9320	.7830	.6339	.4849	.3358
474	.1246	.9756	.8265	.6775	.5284	.3794	.2303	.0813	.9322	.7832	.6341	.4851	.3360
477	.1248	.9758	.8267	.6777	.5286	.3796	.2305	.0815	.9324	.7834	.6343	.4853	.3363
425480	22.1250	22.9759	23.8269	24.6778	25.5288	26.3798	27.2307	28.0817	28.9326	29.7836	30.6346	31.4855	32.3365
483	.1251	.9761	.8270	.6780	.5290	.3799	.2309	.0819	.9328	.7838	.6348	.4857	.3367
486	.1253	.9762	.8272	.6782	.5292	.3801	.2311	.0821	.9330	.7840	.6350	.4860	.3369
489	.1254	.9764	.8274	.6784	.5293	.3803	.2313	.0823	.9333	.7842	.6352	.4862	.3372
492	.1256	.9766	.8276	.6785	.5295	.3805	.2315	.0825	.9335	.7844	.6354	.4864	.3374
425495	22.1257	22.9767	23.8277	24.6787	25.5297	26.3807	27.2317	28.0827	28.9337	29.7847	30.6356	31.4866	32.3376
498	.1259	.9769	.8279	.6789	.5299	.3809	.2319	.0829	.9339	.7849	.6359	.4869	.3378
501	.1261	.9771	.8281	.6791	.5301	.3811	.2321	.0831	.9341	.7851	.6361	.4871	.3381
504	.1262	.9772	.8282	.6792	.5302	.3812	.2323	.0833	.9343	.7853	.6363	.4873	.3383
507	.1264	.9774	.8284	.6794	.5304	.3814	.2324	.0835	.9345	.7855	.6365	.4875	.3385
425510	22.1265	22.9775	23.8286	24.6796	25.5306	26.3816	27.2326	28.0837	28.9347	29.7857	30.6367	31.4877	32.3388
513	.1267	.9777	.8287	.6798	.5308	.3818	.2328	.0839	.9349	.7859	.6369	.4880	.3390
516	.1268	.9779	.8289	.6799	.5310	.3820	.2330	.0841	.9351	.7861	.6372	.4882	.3392
519	.1270	.9780	.8291	.6801	.5311	.3822	.2332	.0843	.9353	.7863	.6374	.4884	.3394
522	.1271	.9782	.8292	.6803	.5313	.3824	.2334	.0845	.9355	.7865	.6376	.4886	.3397
425525	22.1273	22.9784	23.8294	24.6805	25.5315	26.3826	27.2336	28.0847	28.9357	29.7868	30.6378	31.4889	32.3399
528	.1275	.9785	.8296	.6806	.5317	.3827	.2338	.0848	.9359	.7870	.6380	.4891	.3401
531	.1276	.9787	.8297	.6808	.5319	.3829	.2340	.0850	.9361	.7872	.6382	.4893	.3404
534	.1278	.9788	.8299	.6810	.5320	.3831	.2342	.0852	.9363	.7874	.6384	.4895	.3406
537	.1279	.9790	.8301	.6811	.5322	.3833	.2344	.0854	.9365	.7876	.6387	.4897	.3408
425540	22.1281	22.9792	23.8302	24.6813	25.5324	26.3835	27.2346	28.0856	28.9367	29.7878	30.6389	31.4900	32.3410
543	.1282	.9793	.8304	.6815	.5326	.3837	.2348	.0858	.9369	.7880	.6391	.4902	.3413
546	.1284	.9795	.8306	.6817	.5328	.3839	.2349	.0860	.9371	.7882	.6393	.4904	.3415
549	.1285	.9796	.8307	.6818	.5329	.3840	.2351	.0862	.9373	.7884	.6395	.4906	.3417
552	.1287	.9798	.8309	.6820	.5331	.3842	.2353	.0864	.9375	.7886	.6397	.4908	.3420
425555	22.1289	22.9800	23.8311	24.6822	25.5333	26.3844	27.2355	28.0866	28.9377	29.7889	30.6400	31.4911	32.3422
558	.1290	.9801	.8312	.6824	.5335	.3846	.2357	.0868	.9379	.7891	.6402	.4913	.3424
561	.1292	.9803	.8314	.6825	.5337	.3848	.2359	.0870	.9381	.7893	.6404	.4915	.3426
564	.1293	.9805	.8316	.6827	.5338	.3850	.2361	.0872	.9384	.7895	.6406	.4917	.3429
567	.1295	.9806	.8318	.6829	.5340	.3852	.2363	.0874	.9386	.7897	.6408	.4920	.3431
425570	22.1296	22.9808	23.8319	24.6831	25.5342	26.3853	27.2365	28.0876	28.9388	29.7899	30.6410	31.4922	32.3433
573	.1298	.9809	.8321	.6832	.5344	.3855	.2367	.0878	.9390	.7901	.6413	.4924	.3435
576	.1300	.9811	.8323	.6834	.5346	.3857	.2369	.0880	.9392	.7903	.6415	.4926	.3438
579	.1301	.9813	.8324	.6836	.5347	.3859	.2371	.0882	.9394	.7905	.6417	.4928	.3440
582	.1303	.9814	.8326	.6838	.5349	.3861	.2372	.0884	.9396	.7907	.6419	.4931	.3442
425585	22.1304	22.9816	23.8328	24.6839	25.5351	26.3863	27.2374	28.0886	28.9398	29.7910	30.6421	31.4933	32.3445
588	.1306	.9818	.8329	.6841	.5353	.3865	.2376	.0888	.9400	.7912	.6423	.4935	.3447
591	.1307	.9819	.8331	.6843	.5355	.3866	.2378	.0890	.9402	.7914	.6426	.4937	.3449
594	.1309	.9821	.8333	.6845	.5356	.3868	.2380	.0892	.9404	.7916	.6428	.4940	.3451
597	.1310	.9822	.8334	.6846	.5358	.3870	.2382	.0894	.9406	.7918	.6430	.4942	.3454
425600	22.1312	22.9824	23.8336	24.6848	25.5360	26.3872	27.2384	28.0896	28.9408	29.7920	30.6432	31.4944	32.3456

MEGACYCLES PER SECOND

L

H A R M O N I C S

BASIC FREQ.	78	80	82	84	86	88	90	92	94	96	100	104	108
425300	33.1734	34.0240	34.8746	35.7252	36.5758	37.4264	38.2770	39.1276	39.9782	40.8288	42.5300	44.2312	45.9324
303	.1736	.0242	.8748	.7255	.5761	.4267	.2773	.1279	.9785	.8291	.5303	.2315	.9327
306	.1739	.0245	.8751	.7257	.5763	.4269	.2775	.1282	.9788	.8294	.5306	.2318	.9330
309	.1741	.0247	.8753	.7260	.5766	.4272	.2778	.1284	.9790	.8297	.5309	.2321	.9334
312	.1743	.0250	.8756	.7262	.5768	.4275	.2781	.1287	.9793	.8300	.5312	.2324	.9337
425315	33.1746	34.0252	34.8758	35.7265	36.5771	37.4277	38.2784	39.1290	39.9796	40.8302	42.5315	44.2328	45.9340
318	.1748	.0254	.8761	.7267	.5773	.4280	.2786	.1293	.9799	.8305	.5318	.2331	.9343
321	.1750	.0257	.8763	.7270	.5776	.4282	.2789	.1295	.9802	.8308	.5321	.2334	.9347
324	.1753	.0259	.8766	.7272	.5779	.4285	.2792	.1298	.9805	.8311	.5324	.2337	.9350
327	.1755	.0262	.8768	.7275	.5781	.4288	.2794	.1301	.9807	.8314	.5327	.2340	.9353
425330	33.1757	34.0264	34.8771	35.7277	36.5784	37.4290	38.2797	39.1304	39.9810	40.8317	42.5330	44.2343	45.9356
333	.1760	.0266	.8773	.7280	.5786	.4293	.2800	.1306	.9813	.8320	.5333	.2346	.9360
336	.1762	.0269	.8776	.7282	.5789	.4296	.2802	.1309	.9816	.8323	.5336	.2349	.9363
339	.1764	.0271	.8778	.7285	.5792	.4298	.2805	.1312	.9819	.8325	.5339	.2353	.9366
342	.1767	.0274	.8780	.7287	.5794	.4301	.2808	.1315	.9821	.8328	.5342	.2356	.9369
425345	33.1769	34.0276	34.8783	35.7290	36.5797	37.4304	38.2811	39.1317	39.9824	40.8331	42.5345	44.2359	45.9373
348	.1771	.0278	.8785	.7292	.5799	.4306	.2813	.1320	.9827	.8334	.5348	.2362	.9376
351	.1774	.0281	.8788	.7295	.5802	.4309	.2816	.1323	.9830	.8337	.5351	.2365	.9379
354	.1776	.0283	.8790	.7297	.5804	.4312	.2819	.1326	.9833	.8340	.5354	.2368	.9382
357	.1778	.0286	.8793	.7300	.5807	.4314	.2821	.1328	.9836	.8343	.5357	.2371	.9386
425360	33.1781	34.0288	34.8795	35.7302	36.5810	37.4317	38.2824	39.1331	39.9838	40.8346	42.5360	44.2374	45.9389
363	.1783	.0290	.8798	.7305	.5812	.4319	.2827	.1334	.9841	.8348	.5363	.2378	.9392
366	.1785	.0293	.8800	.7307	.5815	.4322	.2829	.1337	.9844	.8351	.5366	.2381	.9395
369	.1788	.0295	.8803	.7310	.5817	.4325	.2832	.1339	.9847	.8354	.5369	.2384	.9399
372	.1790	.0298	.8805	.7312	.5820	.4327	.2835	.1342	.9850	.8357	.5372	.2387	.9402
425375	33.1793	34.0300	34.8808	35.7315	36.5823	37.4330	38.2838	39.1345	39.9853	40.8360	42.5375	44.2390	45.9405
378	.1795	.0302	.8810	.7318	.5825	.4333	.2840	.1348	.9855	.8363	.5378	.2393	.9408
381	.1797	.0305	.8812	.7320	.5828	.4335	.2843	.1351	.9858	.8366	.5381	.2396	.9411
384	.1800	.0307	.8815	.7323	.5830	.4338	.2846	.1353	.9861	.8369	.5384	.2399	.9415
387	.1802	.0310	.8817	.7325	.5833	.4341	.2848	.1356	.9864	.8372	.5387	.2402	.9418
425390	33.1804	34.0312	34.8820	35.7328	36.5835	37.4343	38.2851	39.1359	39.9867	40.8374	42.5390	44.2406	45.9421
393	.1807	.0314	.8822	.7330	.5838	.4346	.2854	.1362	.9869	.8377	.5393	.2409	.9424
396	.1809	.0317	.8825	.7333	.5841	.4348	.2856	.1364	.9872	.8380	.5396	.2412	.9428
399	.1811	.0319	.8827	.7335	.5843	.4351	.2859	.1367	.9875	.8383	.5399	.2415	.9431
402	.1814	.0322	.8830	.7338	.5846	.4354	.2862	.1370	.9878	.8386	.5402	.2418	.9434
425405	33.1816	34.0324	34.8832	35.7340	36.5848	37.4356	38.2865	39.1373	39.9881	40.8389	42.5405	44.2421	45.9437
408	.1818	.0326	.8835	.7343	.5851	.4359	.2867	.1375	.9884	.8392	.5408	.2424	.9441
411	.1821	.0329	.8837	.7345	.5853	.4362	.2870	.1378	.9886	.8395	.5411	.2427	.9444
414	.1823	.0331	.8839	.7348	.5856	.4364	.2873	.1381	.9889	.8397	.5414	.2431	.9447
417	.1825	.0334	.8842	.7350	.5859	.4367	.2875	.1384	.9892	.8400	.5417	.2434	.9450
425420	33.1828	34.0336	34.8844	35.7353	36.5861	37.4370	38.2878	39.1386	39.9895	40.8403	42.5420	44.2437	45.9454
423	.1830	.0338	.8847	.7355	.5864	.4372	.2881	.1389	.9898	.8406	.5423	.2440	.9457
426	.1832	.0341	.8849	.7358	.5866	.4375	.2883	.1392	.9900	.8409	.5426	.2443	.9460
429	.1835	.0343	.8852	.7360	.5869	.4378	.2886	.1395	.9903	.8412	.5429	.2446	.9463
432	.1837	.0346	.8854	.7363	.5872	.4380	.2889	.1397	.9906	.8415	.5432	.2449	.9467
425435	33.1839	34.0348	34.8857	35.7365	36.5874	37.4383	38.2892	39.1400	39.9909	40.8418	42.5435	44.2452	45.9470
438	.1842	.0350	.8859	.7368	.5877	.4385	.2894	.1403	.9912	.8420	.5438	.2456	.9473
441	.1844	.0353	.8862	.7370	.5879	.4388	.2897	.1406	.9915	.8423	.5441	.2459	.9476
444	.1846	.0355	.8864	.7373	.5882	.4391	.2900	.1408	.9917	.8426	.5444	.2462	.9480
447	.1849	.0358	.8867	.7375	.5884	.4393	.2902	.1411	.9920	.8429	.5447	.2465	.9483
425450	33.1851	34.0360	34.8869	35.7378	36.5887	37.4396	38.2905	39.1414	39.9923	40.8432	42.5450	44.2468	45.9486
453	.1853	.0362	.8871	.7381	.5890	.4399	.2908	.1417	.9926	.8435	.5453	.2471	.9489
456	.1856	.0365	.8874	.7383	.5892	.4401	.2910	.1420	.9929	.8438	.5456	.2474	.9492
459	.1858	.0367	.8876	.7386	.5895	.4404	.2913	.1422	.9931	.8441	.5459	.2477	.9496
462	.1860	.0370	.8879	.7388	.5897	.4407	.2916	.1425	.9934	.8444	.5462	.2480	.9499
425465	33.1863	34.9372	34.8881	35.7391	36.5900	37.4409	38.2919	39.1428	39.9937	40.8446	42.5465	44.2484	45.9502
468	.1865	.0374	.8884	.7393	.5902	.4412	.2921	.1431	.9940	.8449	.5468	.2487	.9505
471	.1867	.0377	.8886	.7396	.5905	.4414	.2924	.1433	.9943	.8452	.5471	.2490	.9509
474	.1870	.0379	.8889	.7398	.5908	.4417	.2927	.1436	.9946	.8455	.5474	.2493	.9512
477	.1872	.0382	.8891	.7401	.5910	.4420	.2929	.1439	.9948	.8458	.5477	.2496	.9515
425480	33.1874	34.0384	34.8894	35.7403	36.5913	37.4422	38.2932	39.1442	39.9951	40.8461	42.5480	44.2499	45.9518
483	.1877	.0386	.8896	.7406	.5915	.4425	.2935	.1444	.9954	.8464	.5483	.2502	.9522
486	.1879	.0389	.8899	.7408	.5918	.4428	.2937	.1447	.9957	.8467	.5486	.2505	.9525
489	.1881	.0391	.8901	.7411	.5921	.4430	.2940	.1450	.9960	.8469	.5489	.2509	.9528
492	.1884	.0394	.8903	.7413	.5923	.4433	.2943	.1453	.9962	.8472	.5492	.2512	.9531
425495	33.1886	34.0396	34.8906	35.7416	36.5926	37.4436	38.2946	39.1455	39.9965	40.8475	42.5495	44.2515	45.9535
498	.1888	.0398	.8908	.7418	.5928	.4438	.2948	.1458	.9968	.8478	.5498	.2518	.9538
501	.1891	.0401	.8911	.7421	.5931	.4441	.2951	.1461	.9971	.8481	.5501	.2521	.9541
504	.1893	.0403	.8913	.7423	.5933	.4444	.2954	.1464	.9974	.8484	.5504	.2524	.9544
507	.1895	.0406	.8916	.7426	.5936	.4446	.2956	.1466	.9977	.8487	.5507	.2527	.9548
425410	33.1898	34.0408	34.8918	35.7428	36.5939	37.4449	38.2959	39.1469	39.9979	40.8490	42.5510	44.2530	45.9551
513	.1900	.0410	.8921	.7431	.5941	.4451	.2962	.1472	.9982	.8492	.5513	.2534	.9554
516	.1902	.0413	.8923	.7433	.5944	.4454	.2964	.1475	.9985	.8495	.5516	.2537	.9557
519	.1905	.0415	.8926	.7436	.5946	.4457	.2967	.1477	.9988	.8498	.5519	.2540	.9561
522	.1907	.0418	.8928	.7438	.5949	.4459	.2970	.1480	.9991	.8501	.5522	.2543	.9564
425525	33.1910	34.0420	34.8931	35.7441	36.5952	37.4462	38.2973	39.1483	39.9994	40.8504	42.5525	44.2546	45.9567
528	.1912	.0422	.8933	.7444	.5954	.4465	.2975	.1486	.9996	.8507	.5528	.2549	.9570
531	.1914	.0425	.8935	.7446	.5957	.4467	.2978	.1489	.9999	.8510	.5531	.2552	.9573
534	.1917	.0427	.8938	.7449	.5959	.4470	.2981	.1491	40.0002	.8513	.5534	.2555	.9577
537	.1919	.0430	.8940	.7451	.5962	.4473	.2983	.1494	.0005	.8516	.5537	.2558	.9580
425540	33.1921	34.0432	34.8943	35.7454	36.5964	37.4475	38.2986	39.1497	40.0008	40.8518	42.5540	44.2562	45.9583
543	.1924	.0434	.8945	.7456	.5967	.4478	.2989	.1500	.0010	.8521	.5543	.2565	.9586
546	.1926	.0437	.8948	.7459	.5970	.4480	.2991	.1502	.0013	.8524	.5546	.2568	.9590
549	.1928	.0439	.8950	.7461	.5972	.4483	.2994	.1505	.0016	.8527	.5549	.2571	.9593
552	.1931	.0442	.8953	.7464	.5975	.4486	.2997	.1508	.0019	.8530	.5552	.2574	.9596
425555	33.1933	34.0444	34.8955	35.7466	36.5977	37.4488	38.3000	39.1511	40.0022	40.8533	42.5555	44.2577	45.9599
558	.1935	.0446	.8958	.7469	.5980	.4491	.3002	.1513	.0025	.8536	.5558	.2580	.9603
561	.1938	.0449	.8960	.7471	.5982	.4494	.3005	.1516	.0027	.8539	.5561	.2583	.9606
564	.1940	.0451	.8962	.7474	.5985	.4496	.3008	.1519	.0030	.8541	.5564	.2587	.9609
567	.1942	.0454	.8965	.7476	.5988	.4499	.3010	.1522	.0033	.8544	.5567	.2590	.9612
425570	33.1945	34.0456	34.8967	35.7479	36.5990	37.4502	38.3013	39.1524	40.0036	40.8547	42.5570	44.2593	45.9616
573	.1947	.0458	.8970	.7481	.5993	.4504	.3016	.1527	.0039	.8550	.5573	.2596	.9619
576	.1949	.0461	.8972	.7484	.5995	.4507	.3018	.1530	.0041	.8553	.5576	.2599	.9622
579	.1952	.0463	.8975	.7486	.5998	.4510	.3021	.1533	.0044	.8556	.5579	.2602	9625
582	.1954	.0466	.8977	.7489	.6001	.4512	.3024	.1535	.0047	.8559	.5582	.2605	.9629
425585	33.1956	34.0468	34.8980	35.7491	36.6003	37.4515	38.3027	39.1538	40.0050	40.8562	42.5585	44.2608	45.9632
588	.1959	.0470	.8982	.7494	.6006	.4517	.3029	.1541	.0053	.8564	.5588	.2612	.9635
591	.1961	.0473	.8985	.7496	.6008	.4520	.3032	.1544	.0056	.8567	.5591	.2615	.9638
594	.1963	.0475	.8987	.7499	.6011	.4523	.3035	.1546	.0058	.8570	.5594	.2618	.9642
597	.1966	.0478	.8990	.7501	.6013	.4525	.3037	.1549	.0061	.8573	.5597	.2621	.9645
425600	33.1968	34.0480	34.8992	35.7504	36.6016	37.4528	38.3040	39.1552	40.0064	40.8576	42.5600	44.2624	45.9648

H A R M O N I C S

BASIC FREQ.	52	54	56	58	60	62	64	66	68	70	72	74	76
425600	22.1312	22.9824	23.8336	24.6848	25.5360	26.3872	27.2384	28.0896	28.9408	29.7920	30.6432	31.4944	32.3456
603	.1314	.9826	.8338	.6850	.5362	.3874	.2386	.0898	.9410	.7922	.6434	.4946	.3458
606	.1315	.9827	.8339	.6851	.5364	.3876	.2388	.0900	.9412	.7924	.6436	.4948	.3461
609	.1317	.9829	.8341	.6853	.5365	.3878	.2390	.0902	.9414	.7926	.6438	.4951	.3463
612	.1318	.9830	.8343	.6855	.5367	.3879	.2392	.0904	.9416	.7928	.6441	.4953	.3465
425615	22.1320	22.9832	23.8344	24.6857	25.5369	26.3881	27.2394	28.0906	28.9418	29.7931	30.6443	31.4955	32.3467
618	.1321	.9834	.8346	.6858	.5371	.3883	.2396	.0908	.9420	.7933	.6445	.4957	.3470
621	.1323	.9835	.8348	.6860	.5373	.3885	.2397	.0910	.9422	.7935	.6447	.4960	.3472
624	.1324	.9837	.8349	.6862	.5374	.3887	.2399	.0912	.9424	.7937	.6449	.4962	.3474
627	.1326	.9839	.8351	.6864	.5376	.3889	.2401	.0914	.9426	.7939	.6451	.4964	.3477
425630	22.1328	22.9840	23.8353	24.6865	25.5378	26.3891	27.2403	28.0916	28.9428	29.7941	30.6454	31.4966	32.3479
633	.1329	.9842	.8354	.6867	.5380	.3892	.2405	.0918	.9430	.7943	.6456	.4968	.3481
636	.1331	.9843	.8356	.6869	.5382	.3894	.2407	.0920	.9432	.7945	.5458	.4971	.3483
639	.1332	.9845	.8358	.6871	.5383	.3896	.2409	.0922	.9435	.7947	.6460	.4973	.3486
642	.1334	.9847	.8360	.6872	.5385	.3898	.2411	.0924	.9437	.7949	.6462	.4975	.3488
425645	22.1335	22.9848	23.8361	24.6874	25.5387	26.3900	27.2413	28.0926	28.9439	29.7952	30.6464	31.4977	32.3490
648	.1337	.9850	.8363	.6876	.5389	.3902	.2415	.0928	.9441	.7954	.6467	.4980	.3492
651	.1339	.9852	.8365	.6878	.5391	.3904	.2417	.0930	.9443	.7956	.6469	.4982	.3495
654	.1340	.9853	.8366	.6879	.5392	.3905	.2419	.0932	.9445	.7958	.6471	.4984	.3497
657	.1342	.9855	.8368	.6881	.5394	.3907	.2420	.0934	.9447	.7960	.6473	.4986	.3499
425660	22.1343	22.9856	23.8370	24.6883	25.5396	26.3909	27.2422	28.0936	28.9449	29.7962	30.6475	31.4988	32.3502
663	.1345	.9858	.8371	.6885	.5398	.3911	.2424	.0938	.9451	.7964	.6477	.4991	.3504
666	.1346	.9860	.8373	.6886	.5400	.3913	.2426	.0940	.9453	.7966	.6480	.4993	.3506
669	.1348	.9861	.8375	.6888	.5401	.3915	.2428	.0942	.9455	.7968	.6482	.4995	.3508
672	.1349	.9863	.8376	.6890	.5403	.3917	.2430	.0944	.9457	.7970	.6484	.4997	.3511
425675	22.1351	22.9865	23.8378	24.6892	25.5405	26.3919	27.2432	28.0946	28.9459	29.7973	30.6486	31.5000	32.3513
678	.1353	.9866	.8380	.6893	.5407	.3920	.2434	.0947	.9461	.7975	.6488	.5002	.3515
681	.1354	.9868	.8381	.6895	.5409	.3922	.2436	.0949	.9463	.7977	.6490	.5004	.3518
684	.1356	.9869	.8383	.6897	.5410	.3924	.2438	.0951	.9465	.7979	.6492	.5006	.3520
687	.1357	.9871	.8385	.6898	.5412	.3926	.2440	.0953	.9467	.7981	.6495	.5008	.3522
425690	22.1359	22.9873	23.8386	24.6900	25.5414	26.3928	27.2442	28.0955	28.9469	29.7983	30.6497	31.5011	32.3524
693	.1360	.9874	.8388	.6902	.5416	.3930	.2444	.0957	.9471	.7985	.6499	.5013	.3527
696	.1362	.9876	.8390	.6904	.5418	.3932	.2445	.0959	.9473	.7987	.6501	.5015	.3529
699	.1363	.9877	.8391	.6905	.5419	.3933	.2447	.0961	.9475	.7989	.6503	.5017	.3531
702	.1365	.9879	.8393	.6907	.5421	.3935	.2449	.0963	.9477	.7991	.6505	.5019	.3534
425705	22.1367	22.9881	23.8395	24.6909	25.5423	26.3937	27.2451	28.0965	28.9479	29.7994	30.6508	31.5022	32.3536
708	.1368	.9882	.8396	.6911	.5425	.3939	.2453	.0967	.9481	.7996	.6510	.5024	.3538
711	.1370	.9884	.8398	.6912	.5427	.3941	.2455	.0969	.9483	.7998	.6512	.5026	.3540
714	.1371	.9886	.8400	.6914	.5428	.3943	.2457	.0971	.9486	.8000	.6514	.5028	.3543
717	.1373	.9887	.8402	.6916	.5430	.3945	.2459	.0973	.9488	.8002	.6516	.5031	.3545
425720	22.1374	22.9889	23.8403	24.6918	25.5432	26.3946	27.2461	28.0975	28.9490	29.8004	30.6518	31.5033	32.3547
723	.1376	.9890	.8405	.6919	.5434	.3948	.2463	.0977	.9492	.8006	.6521	.5035	.3549
726	.1378	.9892	.8407	.6921	.5436	.3950	.2465	.0979	.9494	.8008	.6523	.5037	.3552
729	.1379	.9894	.8408	.6923	.5437	.3952	.2467	.0981	.9496	.8010	.6525	.5039	.3554
732	.1381	.9895	.8410	.6925	.5439	.3954	.2468	.0983	.9498	.8012	.6527	.5042	.3556
425735	22.1382	22.9897	23.8412	24.6926	25.5441	26.3956	27.2470	28.0985	28.9500	29.8015	30.6529	31.5044	32.3559
738	.1384	.9899	.8413	.6928	.5443	.3958	.2472	.0987	.9502	.8017	.6531	.5046	.3561
741	.1385	.9900	.8415	.6930	.5445	.3959	.2474	.0989	.9504	.8019	.6534	.5048	.3563
744	.1387	.9902	.8417	.6932	.5446	.3961	.2476	.0991	.9506	.8021	.6536	.5051	.3565
747	.1388	.9903	.8418	.6933	.5448	.3963	.2478	.0993	.9508	.8023	.6538	.5053	.3568
425750	22.1390	22.9905	23.8420	24.6935	25.5450	26.3965	27.2480	28.0995	28.9510	29.8025	30.6540	31.5055	32.3570
753	.1392	.9907	.8422	.6937	.5452	.3967	.2482	.0997	.9512	.8027	.6542	.5057	.3572
756	.1393	.9908	.8423	.6938	.5454	.3969	.2484	.0999	.9514	.8029	.6544	.5059	.3575
759	.1395	.9910	.8425	.6940	.5455	.3971	.2486	.1001	.9516	.8031	.6546	.5062	.3577
762	.1396	.9911	.8427	.6942	.5457	.3972	.2488	.1003	.9518	.8033	.6549	.5064	.3579
425765	22.1398	22.9913	23.8428	24.6944	25.5459	26.3974	27.2490	28.1005	28.9520	29.8036	30.6551	31.5066	32.3581
768	.1399	.9915	.8430	.6945	.5461	.3976	.2492	.1007	.9522	.8038	.6553	.5068	.3584
771	.1401	.9916	.8432	.6947	.5463	.3978	.2493	.1009	.9524	.8040	.6555	.5071	.3586
774	.1402	.9918	.8433	.6949	.5464	.3980	.2495	.1011	.9526	.8042	.6557	.5073	.3588
777	.1404	.9920	.8435	.6951	.5466	.3982	.2497	.1013	.9528	.8044	.6559	.5075	.3591
425780	22.1406	22.9921	23.8437	24.6952	25.5468	26.3984	27.2499	28.1015	28.9530	29.8046	30.6562	31.5077	32.3593
783	.1407	.9923	.8438	.6954	.5470	.3985	.2501	.1017	.9532	.8048	.6564	.5079	.3595
786	.1409	.9924	.8440	.6956	.5472	.3987	.2503	.1019	.9534	.8050	.6566	.5082	.3597
789	.1410	.9926	.8442	.6958	.5473	.3989	.2505	.1021	.9537	.8052	.6568	.5084	.3600
792	.1412	.9928	.8444	.6959	.5475	.3991	.2507	.1023	.9539	.8054	.6570	.5086	.3602
425795	22.1413	22.9929	23.8445	24.6961	25.5477	26.3993	27.2509	28.1025	28.9541	29.8057	30.6572	31.5088	32.3604
798	.1415	.9931	.8447	.6963	.5479	.3995	.2511	.1027	.9543	.8059	.6575	.5091	.3605
801	.1417	.9933	.8449	.6965	.5481	.3997	.2513	.1029	.9545	.8061	.6577	.5093	.3609
804	.1418	.9934	.8450	.6966	.5482	.3998	.2515	.1031	.9547	.8063	.6579	.5095	.3611
807	.1420	.9936	.8452	.6968	.5484	.4000	.2516	.1033	.9549	.8065	.6581	.5097	.3613
425810	22.1421	22.9937	23.8454	24.6970	25.5486	26.4002	27.2518	28.1035	28.9551	29.8067	30.6583	31.5099	32.3616
813	.1423	.9939	.8455	.6972	.5488	.4004	.2520	.1037	.9553	.8069	.6585	.5102	.3618
816	.1424	.9941	.8457	.6973	.5490	.4006	.2522	.1039	.9555	.8071	.6588	.5104	.3620
819	.1426	.9942	.8459	.6975	.5491	.4008	.2524	.1041	.9557	.8073	.6590	.5106	.3622
822	.1427	.9944	.8460	.6977	.5493	.4010	.2526	.1043	.9559	.8075	.6592	.5108	.3625
425825	22.1429	22.9946	23.8462	24.6979	25.5495	26.4012	27.2528	28.1045	28.9561	29.8078	30.6594	31.5111	32.3627
828	.1431	.9947	.8464	.6980	.5497	.4013	.2530	.1046	.9563	.8080	.6596	.5113	.3629
831	.1432	.9949	.8465	.6982	.5499	.4015	.2532	.1048	.9565	.8082	.6598	.5115	.3632
834	.1434	.9950	.8467	.6984	.5500	.4017	.2534	.1050	.9567	.8084	.6600	.5117	.3634
837	.1435	.9952	.8469	.6985	.5502	.4019	.2536	.1052	.9569	.8086	.6603	.5119	.3636
425840	22.1437	22.9954	23.8470	24.6987	25.5504	26.4021	27.2538	28.1054	28.9571	29.8088	30.6605	31.5122	32.3638
843	.1438	.9955	.8472	.6989	.5506	.4023	.2540	.1056	.9573	.8090	.6607	.5124	.3641
846	.1440	.9957	.8474	.6991	.5508	.4025	.2541	.1058	.9575	.8092	.6609	.5126	.3643
849	.1441	.9958	.8475	.6992	.5509	.4026	.2543	.1060	.9577	.8094	.6611	.5128	.3645
852	.1443	.9960	.8477	.6994	.5511	.4028	.2545	.1062	.9579	.8096	.6613	.5130	.3648
425855	22.1445	22.9962	23.8479	24.6996	25.5513	26.4030	27.2547	28.1064	28.9581	29.8099	30.6616	31.5133	32.3650
858	.1446	.9963	.8480	.6998	.5515	.4032	.2549	.1066	.9583	.8101	.6618	.5135	.3652
861	.1448	.9965	.8482	.6999	.5517	.4034	.2551	.1068	.9585	.8103	.6620	.5137	.3654
864	.1449	.9967	.8484	.7001	.5518	.4036	.2553	.1070	.9588	.8105	.6622	.5139	.3657
867	.1451	.9968	.8486	.7003	.5520	.4038	.2555	.1072	.9590	.8107	.6624	.5142	.3659
425870	22.1452	22.9970	23.8487	24.7005	25.5522	26.4039	27.2557	28.1074	28.9592	29.8109	30.6626	31.5144	32.3661
873	.1454	.9971	.8489	.7006	.5524	.4041	.2559	.1076	.9494	.8111	.6629	.5146	.3663
876	.1456	.9973	.8491	.7008	.5526	.4043	.2561	.1078	.9596	.8113	.6631	.5148	.3666
879	.1457	.9975	.8492	.7010	.5527	.4045	.2563	.1080	.9598	.8115	.6633	.5150	.3668
882	.1459	.9976	.8494	.7012	.5529	.4047	.2564	.1082	.9600	.8117	.6635	.5153	.3670
425885	22.1460	22.9978	23.8496	24.7013	25.5531	26.4049	27.2566	28.1084	28.9602	29.8120	30.6637	31.5155	32.3673
888	.1462	.9980	.8497	.7015	.5533	.4051	.2568	.1086	.9604	.8122	.6639	.5157	.3675
891	.1463	.9981	.8499	.7017	.5535	.4052	.2570	.1088	.9606	.8124	.6642	.5159	.3677
894	.1465	.9983	.8501	.7019	.5536	.4054	.2572	.1090	.9608	.8126	.6644	.5162	.3679
897	.1466	.9984	.8502	.7020	.5538	.4056	.2574	.1092	.9610	.8128	.6646	.5164	.3682
425900	22.1468	22.9986	23.8504	24.7022	25.5540	26.4058	27.2576	28.1094	28.9612	29.8130	30.6648	31.5166	32.3684

MEGACYCLES PER SECOND

HARMONICS

BASIC FREQ.	78	80	82	84	86	88	90	92	94	96	100	104	108
425600	33.1968	34.0480	34.8992	35.7504	36.6016	37.4528	38.3040	39.1552	40.0064	40.8576	42.5600	44.2624	45.9648
603	.1970	.0482	.8994	.7507	.6019	.4531	.3043	.1555	.0067	.8579	.5603	.2627	.9651
606	.1973	.0485	.8997	.7509	.6021	.4533	.3045	.1558	.0070	.8582	.5606	.2630	.9654
609	.1975	.0487	.8999	.7512	.6024	.4536	.3048	.1560	.0072	.8585	.5609	.2633	.9658
612	.1977	.0490	.9002	.7514	.6026	.4539	.3051	.1563	.0075	.8588	.5612	.2636	.9661
425615	33.1980	34.0492	34.9004	35.7517	36.6029	37.4541	38.3054	39.1566	40.0078	40.8590	42.5615	44.2640	45.9664
618	.1982	.0494	.9007	.7519	.6031	.4544	.3056	.1569	.0081	.8593	.5618	.2643	.9667
621	.1984	.0497	.9009	.7522	.6034	.4546	.3059	.1571	.0084	.8596	.5621	.2646	.9671
624	.1987	.0499	.9012	.7524	.6037	.4549	.3062	.1574	.0087	.8599	.5624	.2649	.9674
627	.1989	.0502	.9014	.7527	.6039	.4552	.3064	.1577	.0089	.8602	.5627	.2652	.9677
425630	33.1991	34.0504	34.9017	35.7529	36.6042	37.4554	38.3067	39.1580	40.0092	40.8605	42.5630	44.2655	45.9680
633	.1994	.0506	.9019	.7532	.6044	.4557	.3070	.1582	.0095	.8608	.5633	.2658	.9684
636	.1996	.0509	.9022	.7534	.6047	.4560	.3072	.1585	.0098	.8611	.5636	.2661	.9687
639	.1998	.0511	.9024	.7537	.6050	.4562	.3075	.1588	.0101	.8613	.5639	.2665	.9690
642	.2001	.0514	.9026	.7539	.6052	.4565	.3078	.1591	.0103	.8616	.5642	.2668	.9693
425645	33.2003	34.0516	34.9029	35.7542	36.6055	37.4568	38.3081	39.1593	40.0106	40.8619	42.5645	44.2671	45.9697
648	.2005	.0518	.9031	.7544	.6057	.4570	.3083	.1596	.0109	.8622	.5648	.2674	.9700
651	.2008	.0521	.9034	.7547	.6060	.4573	.3086	.1599	.0112	.8625	.5651	.2677	.9703
654	.2010	.0523	.9036	.7549	.6062	.4576	.3089	.1602	.0115	.8628	.5654	.2680	.9706
657	.2012	.0526	.9039	.7552	.6065	.4578	.3091	.1604	.0118	.8631	.5657	.2683	.9710
425660	33.2015	34.0528	34.9041	35.7554	36.6068	37.4581	38.3094	39.1607	40.0120	40.8634	42.5660	44.2686	45.9713
663	.2017	.0530	.9044	.7557	.6070	.4583	.3097	.1610	.0123	.8636	.5663	.2690	.9716
666	.2019	.0533	.9046	.7559	.6073	.4586	.3099	.1613	.0126	.8639	.5666	.2693	.9719
669	.2022	.0535	.9049	.7562	.6075	.4589	.3102	.1615	.0129	.8642	.5669	.2696	.9723
672	.2024	.0538	.9051	.7564	.6078	.4591	.3105	.1618	.0132	.8645	.5672	.2699	.9726
425675	33.2027	34.0540	34.9054	35.7567	36.6081	37.4594	38.3108	39.1621	40.0135	40.8648	42.5675	44.2702	45.9729
678	.2029	.0542	.9056	.7570	.6083	.4597	.3110	.1624	.0137	.8651	.5678	.2705	.9732
681	.2031	.0545	.9058	.7572	.6086	.4599	.3113	.1627	.0140	.8654	.5681	.2708	.9735
684	.2034	.0547	.9061	.7575	.6088	.4602	.3116	.1629	.0143	.8657	.5684	.2711	.9739
687	.2036	.0550	.9063	.7577	.6091	.4605	.3118	.1632	.0146	.8660	.5687	.2714	.9742
425690	33.2038	34.0552	34.9066	35.7580	36.6093	37.4607	38.3121	39.1635	40.0149	40.8662	42.5690	44.2718	45.9745
693	.2041	.0554	.9068	.7582	.6096	.4610	.3124	.1638	.0151	.8665	.5693	.2721	.9748
696	.2043	.0557	.9071	.7585	.6099	.4612	.3126	.1640	.0154	.8668	.5696	.2724	.9752
699	.2045	.0559	.9073	.7587	.6101	.4615	.3129	.1643	.0157	.8671	.5699	.2727	.9755
702	.2048	.0562	.9076	.7590	.6104	.4618	.3132	.1646	.0160	.8674	.5702	.2730	.9758
425705	33.2050	34.0564	34.9078	35.7592	36.6106	37.4620	38.3135	39.1649	40.0163	40.8677	42.5705	44.2733	45.9761
708	.2052	.0566	.9081	.7595	.6109	.4623	.3137	.1651	.0166	.8680	.5708	.2736	.9765
711	.2055	.0569	.9083	.7597	.6111	.4626	.3140	.1654	.0168	.8683	.5711	.2739	.9768
714	.2057	.0571	.9085	.7600	.6114	.4628	.3143	.1657	.0171	.8685	.5714	.2743	.9771
717	.2059	.0574	.9088	.7602	.6117	.4631	.3145	.1660	.0174	.8688	.5717	.2746	.9774
425720	33.2062	34.0576	34.9090	35.7605	36.6119	37.4634	38.3148	39.1662	40.0177	40.8691	42.5720	44.2749	45.9778
723	.2064	.0578	.9093	.7607	.6122	.4636	.3151	.1665	.0180	.8694	.5723	.2752	.9781
726	.2066	.0581	.9095	.7610	.6124	.4639	.3153	.1668	.0182	.8697	.5726	.2755	.9784
729	.2069	.0583	.9098	.7612	.6127	.4642	.3156	.1671	.0185	.8700	.5729	.2758	.9787
732	.2071	.0586	.9100	.7615	.6130	.4644	.3159	.1673	.0188	.8703	.5732	.2761	.9791
425735	33.2073	34.0588	34.9103	35.7617	36.6132	37.4647	38.3162	39.1676	40.0191	40.8706	42.5735	44.2764	45.9794
738	.2076	.0590	.9105	.7620	.6135	.4649	.3164	.1679	.0194	.8708	.5738	.2768	.9797
741	.2078	.0593	.9108	.7622	.6137	.4652	.3167	.1682	.0197	.8711	.5741	.2771	.9800
744	.2080	.0595	.9110	.7625	.6140	.4655	.3170	.1684	.0199	.8714	.5744	.2774	.9804
747	.2083	.0598	.9113	.7627	.6142	.4657	.3172	.1687	.0202	.8717	.5747	.2777	.9807
425750	33.2085	34.0600	34.9115	35.7630	36.6145	37.4660	38.3175	39.1690	40.0205	40.8720	42.5750	44.2780	45.9810
753	.2087	.0602	.9117	.7633	.6148	.4663	.3178	.1693	.0208	.8723	.5753	.2783	.9813
756	.2090	.0605	.9120	.7635	.6150	.4665	.3180	.1696	.0211	.8726	.5756	.2786	.9816
759	.2092	.0607	.9122	.7638	.6153	.4668	.3183	.1698	.0213	.8729	.5759	.2789	.9820
762	.2094	.0610	.9125	.7640	.6155	.4671	.3186	.1701	.0216	.8732	.5762	.2792	.9823
425765	33.2097	34.0612	34.9127	35.7643	36.6158	37.4673	38.3189	39.1704	40.0219	40.8734	42.5765	44.2796	45.9826
768	.2099	.0614	.9130	.7645	.6160	.4676	.3191	.1707	.0222	.8737	.5768	.2799	.9829
771	.2101	.0617	.9132	.7648	.6163	.4678	.3194	.1709	.0225	.8740	.5771	.2802	.9833
774	.2104	.0619	.9135	.7650	.6166	.4681	.3197	.1712	.0228	.8743	.5774	.2805	.9836
777	.2106	.0622	.9137	.7653	.6168	.4684	.3199	.1715	.0230	.8746	.5777	.2808	.9839
425780	33.2108	34.0624	34.9140	35.7655	36.6171	37.4686	38.3202	39.1718	40.0233	40.8749	42.5780	44.2811	45.9842
783	.2111	.0626	.9142	.7658	.6173	.4689	.3205	.1720	.0236	.8752	.5783	.2814	.9846
786	.2113	.0629	.9145	.7660	.6176	.4692	.3207	.1723	.0239	.8755	.5786	.2817	.9849
789	.2115	.0631	.9147	.7663	.6179	.4694	.3210	.1726	.0242	.8757	.5789	.2821	.9852
792	.2118	.0634	.9149	.7665	.6181	.4697	.3213	.1729	.0244	.8760	.5792	.2824	.9855
425795	33.2120	34.0636	34.9152	35.7668	36.6184	37.4700	38.3216	39.1731	40.0247	40.8763	42.5795	44.2827	45.9859
798	.2122	.0638	.9154	.7670	.6186	.4702	.3218	.1734	.0250	.8766	.5798	.2830	.9862
801	.2125	.0641	.9157	.7673	.6189	.4705	.3221	.1737	.0253	.8769	.5801	.2833	.9865
804	.2127	.0643	.9159	.7675	.6191	.4708	.3224	.1740	.0256	.8772	.5804	.2836	.9868
807	.2129	.0646	.9162	.7678	.6194	.4710	.3226	.1742	.0259	.8775	.5807	.2839	.9872
425810	33.2132	34.0648	34.9164	35.7680	36.6197	37.4713	38.3229	39.1745	40.0261	40.8778	42.5810	44.2842	45.9875
813	.2134	.0650	.9167	.7683	.6199	.4715	.3232	.1748	.0264	.8780	.5813	.2846	.9878
816	.2136	.0653	.9169	.7685	.6202	.4718	.3234	.1751	.0267	.8783	.5816	.2849	.9881
819	.2139	.0655	.9172	.7688	.6204	.4721	.3237	.1753	.0270	.8786	.5819	.2852	.9885
822	.2141	.0658	.9174	.7690	.6207	.4723	.3240	.1756	.0273	.8789	.5822	.2855	.9884
425825	33.2144	34.0660	34.9177	35.7693	36.6210	37.4726	38.3243	39.1759	40.0276	40.8792	42.5825	44.2858	45.9897
828	.2146	.0662	.9179	.7696	.6212	.4729	.3245	.1762	.0278	.8795	.5828	.2861	.9898
831	.2148	.0665	.9181	.7698	.6215	.4731	.3248	.1765	.0281	.8798	.5831	.2864	.9891
834	.2151	0667	9184	7701	6217	.4734	.3251	.1767	.0284	.8801	.5834	.2867	.9901
837	.2153	.0670	.9186	.7703	.6220	.4737	.3253	.1770	.0287	.8804	.5837	.2870	.9904
425840	33.2155	34.0672	34.9189	35.7706	36.6222	37.4739	38.3256	39.1773	40.0290	40.8806	42.5840	44.2874	45.9907
843	.2158	.0674	.9191	.7708	.6225	.4742	.3259	.1776	.0292	.8809	.5843	.2877	.9910
846	.2160	.0677	.9194	.7711	.6228	.4744	.3261	.1778	.0295	.8812	.5846	.2880	.9914
849	.2162	.0679	.9196	.7713	.6230	.4747	.3264	.1781	.0298	.8815	.5849	.2883	.9917
852	.2165	.0682	.9199	.7716	.6233	.4750	.3267	.1784	.0301	.8818	.5852	.2886	.9920
425855	33.2167	34.0684	34.9201	35.7718	36.6235	37.4752	38.3270	39.1787	40.0304	40.8821	42.5855	44.2889	45.9923
858	.2169	.0686	.9204	.7721	.6238	.4755	.3272	.1789	.0307	.8824	.5858	.2892	.9927
861	.2172	.0689	.9206	.7723	.6240	.4758	.3275	.1792	.0309	.8827	.5861	.2895	.9930
864	.2174	.0691	.9208	.7726	.6243	.4760	.3278	.1795	.0312	.8829	.5864	.2899	.9933
867	.2176	.0694	.9211	.7728	.6246	.4763	.3280	.1798	.0315	.8832	.5867	.2902	.9936
425870	33.2179	34.0696	34.9213	35.7731	36.6248	37.4766	38.3283	39.1800	40.0318	40.8835	42.5870	44.2905	45.9940
873	.2181	.0698	.9216	.7733	.6251	.4768	.3286	.1803	.0321	.8838	.5873	.2908	.9943
876	.2183	.0701	.9218	.7736	.6253	.4771	.3288	.1806	.0323	.8841	.5876	.2911	.9946
879	.2186	.0703	.9221	.7738	.6256	.4774	.3291	.1809	.0326	.8844	.5879	.2914	.9949
882	.2188	.0706	.9223	.7741	.6259	.4776	.3294	.1811	.0329	.8847	.5882	.2917	.9953
425885	33.2190	34.0708	34.9226	35.7743	36.6261	37.4779	38.3297	39.1814	40.0332	40.8850	42.5885	44.2920	45.9956
888	.2193	.0710	.9228	.7746	.6264	.4781	.3299	.1817	.0335	.8852	.5888	.2924	.9959
891	.2195	.0713	.9231	.7748	.6266	.4784	.3302	.1820	.0338	.8855	.5891	.2927	.9962
894	.2197	.0715	.9233	.7751	.6269	.4787	.3305	.1822	.0340	.8858	.5894	.2930	.9966
897	.2200	.0718	.9236	.7753	.6271	.4789	.3307	.1825	.0343	.8861	.5897	.2933	.9969
425900	33.2202	34.0720	34.9238	35.7756	36.6274	37.4792	38.3310	39.1828	40.0346	40.8864	42.5900	44.2936	45.9972

HARMONICS

BASIC FREQ.	52	54	56	58	60	62	64	66	68	70	72	74	76
425900	22.1468	22.9986	23.8504	24.7022	25.5540	26.4058	27.2576	28.1094	28.9612	29.8130	30.6648	31.5166	32.3684
903	.1470	.9988	.8506	.7024	.5542	.4060	.2578	.1096	.9614	.8132	.6650	.5168	.3686
906	.1471	.9989	.8507	.7025	.5544	.4062	.2580	.1098	.9616	.8134	.6652	.5170	.3689
909	.1473	.9991	.8509	.7027	.5545	.4064	.2582	.1100	.9618	.8136	.6654	.5173	.3691
912	.1474	.9992	.8511	.7029	.5547	.4065	.2584	.1102	.9620	.8138	.6657	.5175	.3693
425915	22.1476	22.9994	23.8512	24.7031	25.5549	26.4067	27.2586	28.1104	28.9622	29.8141	30.6659	31.5177	32.3695
918	.1477	.9996	.8514	.7032	.5551	.4069	.2588	.1106	.9624	.8143	.6661	.5179	.3698
921	.1479	.9997	.8516	.7034	.5553	.4071	.2589	.1108	.9626	.8145	.6663	.5182	.3700
924	.1480	.9999	.8517	.7036	.5554	.4073	.2591	.1110	.9628	.8147	.6665	.5184	.3702
927	.1482	23.0001	.8519	.7038	.5556	.4075	.2593	.1112	.9630	.8149	.6667	.5186	.3705
425930	22.1484	23.0002	23.8521	24.7039	25.5558	26.4077	27.2595	28.1114	28.9632	29.8151	30.6670	31.5188	32.3707
933	.1485	.0004	.8522	.7041	.5560	.4078	.2597	.1116	.9634	.8153	.6672	.5190	.3709
936	.1487	.0005	.8524	.7043	.5562	.4080	.2599	.1118	.9636	.8155	.6674	.5193	.3711
939	.1488	.0007	.8526	.7045	.5563	.4082	.2601	.1120	.9639	.8157	.6676	.5195	.3714
942	.1490	.0009	.8528	.7046	.5565	.4084	.2603	.1122	.9641	.8159	.6678	.5197	.2716
425945	22.1491	23.0010	23.8529	24.7048	25.5567	26.4086	27.2605	28.1124	28.9643	29.8162	30.6680	31.5199	32.3718
948	.1493	.0012	.8531	.7050	.5569	.4088	.2607	.1126	.9645	.8164	.6683	.5202	.3720
951	.1495	.0014	.8533	.7052	.5571	.4090	.2609	.1128	.9647	.8166	.6685	.5204	.3723
954	.1496	.0015	.8534	.7053	.5572	.4091	.2611	.1130	.9649	.8168	.6687	.5206	.3725
957	.1498	.0017	.8536	.7055	.5574	.4093	.2612	.1132	.9651	.8170	.6689	.5208	.3727
425960	22.1499	23.0018	23.8538	24.7057	25.5576	26.4095	27.2614	28.1134	28.9653	29.8172	30.6691	31.5210	32.3730
963	.1501	.0020	.8539	.7059	.5578	.4097	.2616	.1136	.9655	.8174	.6693	.5213	.3732
966	.1502	.0022	.8541	.7060	.5580	.4099	.2618	.1138	.9657	.8176	.6696	.5215	.3734
969	.1504	.0023	.8543	.7062	.5581	.4101	.2620	.1140	.9659	.8178	.6698	.5217	.3736
972	.1505	.0025	.8544	.7064	.5583	.4103	.2622	.1142	.9661	.8180	.6700	.5219	.3739
425975	22.1507	23.0027	23.8546	24.7066	25.5585	26.4105	27.2624	28.1144	28.9663	29.8183	30.6702	31.5222	32.3741
978	.1509	.0028	.8548	.7067	.5587	.4106	.2626	.1145	.9665	.8185	.6704	.5224	.3743
981	.1510	.0030	.8549	.7069	.5589	.4108	.2628	.1147	.9667	.8187	.6706	.5226	.3746
984	.1512	.0031	.8551	.7071	.5590	.4110	.2630	.1149	.9669	.8189	.6708	.5228	.3748
987	.1513	.0033	.8553	.7072	.5592	.4112	.2632	.1151	.9671	.8191	.6711	.5230	.3750
425990	22.1515	23.0035	23.8554	24.7074	25.5594	26.4114	27.2634	28.1153	28.9673	29.8193	30.6713	31.5233	32.3752
993	.1516	.0036	.8556	.7076	.5596	.4116	.2636	.1155	.9675	.8195	.6715	.5235	.3755
996	.1518	.0038	.8558	.7078	.5598	.4118	.2637	.1157	.9677	.8197	.6717	.5237	.3757
999	.1519	.0039	.8559	.7079	.5599	.4119	.2639	.1159	.9679	.8199	.6719	.5239	.3759
426002	.1521	.0041	.8561	.7081	.5601	.4121	.2641	.1161	.9681	.8201	.6721	.5241	.3762
426005	22.1523	23.0043	23.8563	24.7083	25.5603	26.4123	27.2643	28.1163	28.9683	29.8204	30.6724	31.5244	32.3764
008	.1524	.0044	.8564	.7085	.5605	.4125	.2645	.1165	.9685	.8206	.6726	.5246	.3766
011	.1526	.0046	.8566	.7086	.5607	.4127	.2647	.1167	.9687	.8208	.6728	.5248	.3768
014	.1527	.0048	.8568	.7088	.5608	.4129	.2649	.1169	.9690	.8210	.6730	.5250	.3771
017	.1529	.0049	.8570	.7090	.5610	.4131	.2651	.1171	.9692	.8212	.6732	.5253	.3773
426020	22.1530	23.0051	23.8571	24.7092	25.5612	26.4132	27.2653	28.1173	28.9694	29.8214	30.6734	31.5255	32.3775
023	.1532	.0052	.8573	.7093	.5614	.4134	.2655	.1175	.9696	.8216	.6737	.5257	.3777
026	.1534	.0054	.8575	.7095	.5616	.4136	.2657	.1177	.9698	.8218	.6739	.5259	.3780
029	.1535	.0056	.8576	.7097	.5617	.4138	.2659	.1179	.9700	.8220	.6741	.5261	.3782
032	.1537	.0057	.8578	.7099	.5619	.4140	.2660	.1181	.9702	.8222	.6743	.5264	.3784
426035	22.1538	23.0059	23.8580	24.7100	25.5621	26.4142	27.2662	28.1183	28.9704	29.8225	30.6745	31.5266	32.3787
038	.1540	.0061	.8581	.7102	.5623	.4144	.2664	.1185	.9706	.8227	.6747	.5268	.3789
041	.1541	.0062	.8583	.7104	.5625	.4145	.2666	.1187	.9708	.8229	.6750	.5270	.3791
044	.1543	.0064	.8585	.7106	.5626	.4147	.2668	.1189	.9710	.8231	.6752	.5273	.3793
047	.1544	.0065	.8586	.7107	.5628	.4149	.2670	.1191	.9712	.8233	.6754	.5275	.3796
426050	22.1546	23.0067	23.8588	24.7109	25.5630	26.4151	27.2672	28.1193	28.9714	29.8235	30.6756	31.5277	32.3798
053	.1548	.0069	.8590	.7111	.5632	.4153	.2674	.1195	.9716	.8237	.6758	.5279	.3800
056	.1549	.0070	.8591	.7112	.5634	.4155	.2676	.1197	.9718	.8239	.6760	.5281	.3803
059	.1551	.0072	.8593	.7114	.5635	.4157	.2678	.1199	.9720	.8241	.6762	.5284	.3805
062	.1552	.0073	.8595	.7116	.5637	.4158	.2680	.1201	.9722	.8243	.6765	.5286	.3807
4 26065	22.1554	23.0075	23.8596	24.7118	25.5639	26.4160	27.2682	28.1203	28.9724	29.8246	30.6767	31.5288	32.3809
068	.1555	.0077	.8598	.7119	.5641	.4162	.2684	.1205	.9726	.8248	.6769	.5290	.3812
071	.1557	.0078	.8600	.7121	.5643	.4164	.2685	.1207	.9728	.8250	.6771	.5293	.3814
074	.1558	.0080	.8601	.7123	.5644	.4166	.2687	.1209	.9730	.8252	.6773	.5295	.3816
077	.1560	.0082	.8603	.7125	.5646	.4168	.2689	.1211	.9732	.8254	.6775	.5297	.3819
426080	22.1562	23.0083	23.8605	24.7126	25.5648	26.4160	27.2691	28.1213	28.9734	29.8256	30.6778	31.5299	32.3821
083	.1563	.0085	.8606	.7128	.5650	.4171	.2693	.1215	.9736	.8258	.6780	.5301	.3823
086	.1565	.0086	.8608	.7130	.5652	.4173	.2695	.1217	.9738	.8260	.6782	.5304	.3825
089	.1566	.0088	.8610	.7132	.5653	.4175	.2697	.1219	.9741	.8262	.6784	.5306	.3828
092	.1568	.0090	.8612	.7133	.5655	.4177	.2699	.1221	.9743	.8264	.6786	.5308	.3830
426095	22.1569	23.0091	23.8613	24.7135	25.5657	26.4179	27.2701	28.1223	28.9745	29.8267	30.6788	31.5310	32.3832
098	.1571	.0093	.8615	.7137	.5659	.4181	.2703	.1225	.9747	.8269	.6791	.5313	.3834
101	.1573	.0095	.8617	.7139	.5661	.4183	.2705	.1227	.9749	.8271	.6793	.5315	.3837
104	.1574	.0096	.8618	.7140	.5662	.4184	.2707	.1229	.9751	.8273	.6795	.5317	.3839
107	.1576	.0098	.8620	.7142	.5664	.4186	.2708	.1231	.9753	.8275	.6797	.5319	.3841
426110	22.1577	23.0099	23.8622	24.7144	25.5666	26.4188	27.2710	28.1233	28.9755	29.8277	30.6799	31.5321	32.3844
113	.1579	.0101	.8623	.7146	.5668	.4190	.2712	.1235	.9757	.8279	.6801	.5324	.3846
116	.1580	.0103	.8625	.7147	.5670	.4192	.2714	.1237	.9759	.8281	.6804	.5326	.3848
119	.1582	.0104	.8627	.7149	.5671	.4194	.2716	.1239	.9761	.8283	.6806	.5328	.3850
122	.1583	.0106	.8628	.7151	.5673	.4196	.2718	.1241	.9763	.8285	.6808	.5330	.3853
426125	22.1585	23.0108	23.8630	24.7153	25.5675	26.4198	27.2720	28.1243	28.9765	29.8288	30.6810	31.5333	32.3855
128	.1587	.0109	.8632	.7154	.5677	.4199	.2722	.1244	.9767	.8290	.6812	.5335	.3857
131	.1588	.0111	.8633	.7156	.5679	.4201	.2724	.1246	.9769	.8292	.6814	.5337	.3860
134	.1590	.0112	.8635	.7158	.5680	.4203	.2726	.1248	.9771	.8294	.6816	.5339	.3862
137	.1591	.0114	.8637	.7159	.5682	.4205	.2728	.1250	.9773	.8296	.6819	.5341	.3864
426140	22.1593	23.0116	23.8638	24.7161	25.5684	26.4207	27.2730	28.1252	28.9775	29.8298	30.6821	31.5344	32.3866
143	.1594	.0117	.8640	.7163	.5686	.4209	.2732	.1254	.9777	.8300	.6823	.5346	.3869
146	.1596	.0119	.8642	.7165	.5688	.4211	.2733	.1256	.9779	.8302	.6825	.5348	.3871
149	.1597	.0120	.8643	.7166	.5689	.4212	.2735	.1258	.9781	.8304	.6827	.5350	.3873
152	.1599	.0122	.8645	.7168	.5691	.4214	.2737	.1260	.9783	.8306	.6829	.5352	.3876
426155	22.1601	23.0124	23.8647	24.7170	25.5693	26.4216	27.2739	28.1262	38.9785	29.8309	30.6832	31.5355	32.3878
158	.1602	.0125	.8648	.7172	.5695	.4218	.2741	.1264	.9787	.8311	.6834	.5357	.3880
161	.1604	.0127	.8650	.7173	.5697	.4220	.2743	.1266	.9789	.8313	.6836	.5359	.3882
164	.1605	.0129	.8652	.7175	.5698	.4222	.2745	.1268	.9792	.8315	.6838	.5361	.3885
167	.1607	.0130	.8654	.7177	.5700	.4224	.2747	.1270	.9794	.8317	.6840	.5364	.3887
426170	22.1608	23.0132	23.8655	24.7179	25.5702	26.4225	27.2749	28.1272	28.9796	29.8319	30.6842	31.5366	32.3889
173	.1610	.0133	.8657	.7180	.5704	.4227	.2751	.1274	.9798	.8321	.6845	.5368	.3891
176	.1612	.0135	.8659	.7182	.5706	.4229	.2753	.1276	.9800	.8323	.6847	.5370	.3894
179	.1613	.0137	.8660	.7184	.5707	.4231	.2755	.1278	.9802	.8325	.6849	.5372	.3896
182	.1615	.0138	.8662	.7186	.5709	.4233	.2756	.1280	.9804	.8327	.6851	.5375	.3898
426185	22.1616	23.0140	23.8664	24.7187	25.5711	26.4235	27.2758	28.1282	28.9806	29.8330	30.6853	31.5377	32.3901
188	.1618	.0142	.8665	.7189	.5713	.4237	.2760	.1284	.9808	.8332	.6855	.5379	.3903
191	.1619	.0143	.8667	.7191	.5715	.4238	.2762	.1286	.9810	.8334	.6858	.5381	.3905
194	.1621	.0145	.8669	.7193	.5716	.4240	.2764	.1288	.9812	.8336	.6860	.5384	.3907
197	.1622	.0146	.8670	.7194	.5718	.4242	.2766	.1290	.9814	.8338	.6862	.5386	.3910
426200	22.1624	23.0148	23.8672	24.7196	25.5720	26.4244	27.2768	28.1292	28.9816	29.8340	30.6864	31.5388	32.3912

MEGACYCLES PER SECOND

HARMONICS

BASIC FREQ.	78	80	82	84	86	88	90	92	94	96	100	104	108
425900	33.2202	34.0720	34.9238	35.7756	36.6274	37.4792	38.3310	39.1828	40.0346	40.8864	42.5900	44.2936	45.9972
903	.2204	.0722	.9240	.7759	.6277	.4795	.3313	.1831	.0349	.8867	.5903	.2939	.9975
906	.2207	.0725	.9243	.7761	.6279	.4797	.3315	.1834	.0352	.8870	.5906	.2942	.9978
909	.2209	.0727	.9245	.7764	.6282	.4800	.3318	.1836	.0354	.8873	.5909	.2945	.9982
912	.2211	.0730	.9248	.7766	.6284	.4803	.3321	.1839	.0357	.8876	.5912	.2948	.9985
425915	33.2214	34.0732	34.9250	35.7769	36.6287	37.4805	38.3324	39.1842	40.0360	40.8878	42.5915	44.2952	45.9988
918	.2216	.0734	.9253	.7771	.6289	.4808	.3326	.1845	.0363	.8881	.5918	.2955	.9991
921	.2218	.0737	.9255	.7774	.6292	.4810	.3329	.1847	.0366	.8884	.5921	.2958	.9995
924	.2221	.0739	.9258	.7776	.6295	.4813	.3332	.1850	.0369	.8887	.5924	.2961	.9998
927	.2223	.0742	.9260	.7779	.6297	.4816	.3334	.1853	.0371	.8890	.5927	.2964	46.0001
425930	33.2225	34.0744	34.9263	35.7781	36.6300	37.4818	38.3337	39.1856	40.0374	40.8893	42.5930	44.2967	46.0004
933	.2228	.0746	.9265	.7784	.6302	.4821	.3340	.1858	.0377	.8896	.5933	.2970	.0008
936	.2230	.0749	.9268	.7786	.6305	.4824	.3342	.1861	.0380	.8899	.5936	.2973	.0011
939	.2232	.0751	.9270	.7789	.6308	.4826	.3345	.1864	.0383	.8901	.5939	.2977	.0014
942	.2235	.0754	.9272	.7791	.6310	.4829	.3348	.1867	.0385	.8904	.5942	.2980	.0017
425945	33.2237	34.0756	34.9275	35.7794	36.6313	37.4832	38.3351	39.1869	40.0388	40.8907	42.5945	44.2983	46.0021
948	.2239	.0758	.9277	.7796	.6315	.4834	.3353	.1872	.0391	.8910	.5948	.2986	.0024
951	.2242	.0761	.9280	.7799	.6318	.4837	.3356	.1875	.0394	.8913	.5951	.2989	.0027
954	.2244	.0763	.9282	.7801	.6320	.4840	.3359	.1878	.0397	.8916	.5954	.2992	.0030
957	.2246	.0766	.9285	.7804	.6323	.4842	.3361	.1880	.0400	.8919	.5957	.2995	.0034
425960	33.2249	34.0768	34.9287	35.7806	36.6326	37.4845	38.3364	39.1883	40.0402	40.8922	42.5960	44.2998	46.0037
963	.2251	.0770	.9290	.7809	.6328	.4847	.3367	.1886	.0405	.8924	.5963	.3002	.0040
966	.2253	.0773	.9292	.7811	.6331	.4850	.3369	.1889	.0408	.8927	.5966	.3005	.0043
969	.2256	.0775	.9295	.7814	.6333	.4853	.3372	.1891	.0411	.8930	.5969	.3008	.0047
972	.2258	.0778	.9297	.7816	.6336	.4855	.3375	.1894	.0414	.8933	.5972	.3011	.0050
425975	33.2261	34.0780	34.9300	35.7819	36.6339	37.4858	38.3378	39.1897	40.0417	40.8936	42.5975	44.3014	46.0053
978	.2263	.0782	.9302	.7822	.6341	.4861	.3380	.1900	.0419	.8939	.5978	.3017	.0056
981	.2265	.0785	.9304	.7824	.6344	.4863	.3383	.1903	.0422	.8942	.5981	.3020	.0059
984	.2268	.0787	.9307	.7827	.6346	.4866	.3386	.1905	.0425	.8945	.5984	.3023	.0063
987	.2270	.0790	.9309	.7829	.6349	.4869	.3388	.1908	.0428	.8948	.5987	.3026	.0066
425990	33.2272	34.0792	34.9312	35.7832	36.6351	37.4871	38.3391	39.1911	40.0431	40.8950	42.5990	44.3030	46.0069
993	.2275	.0794	.9314	.7834	.6354	.4874	.3394	.1914	.0433	.8953	.5993	.3033	.0072
996	.2277	.0797	.9317	.7837	.6357	.4876	.3396	.1916	.0436	.8956	.5996	.3036	.0076
999	.2279	.0799	.9319	.7839	.6359	.4879	.3399	.1919	.0439	.8959	.5999	.3039	.0079
426002	.2282	.0802	.9322	.7842	.6362	.4882	.3402	.1922	.0442	.8962	.6002	.3042	.0082
426005	33.2284	34.0804	34.9324	35.7844	36.6364	37.4884	38.3405	39.1925	40.0445	40.8965	42.6005	44.3045	46.0085
008	.2286	.0806	.9327	.7847	.6367	.4887	.3407	.1927	.0448	.8968	.6008	.3048	.0089
011	.2289	.0809	.9329	.7849	.6369	.4890	.3410	.1930	.0450	.8971	.6011	.3051	.0092
014	.2291	.0811	.9331	.7852	.6372	.4892	.3413	.1933	.0453	.8973	.6014	.3055	.0095
017	.2293	.0814	.9334	.7854	.6375	.4895	.3415	.1936	.0456	.8976	.6017	.3058	.0098
426020	33.2296	34.0816	34.9336	35.7857	36.6377	37.4898	38.3418	39.1938	40.0459	40.8979	42.6020	44.3061	46.0102
023	.2298	.0818	.9339	.7859	.6380	.4900	.3421	.1941	.0462	.8982	.6023	.3064	.0105
026	.2300	.0821	.9341	.7862	.6382	.4903	.3423	.1944	.0464	.8985	.6026	.3067	.0108
029	.2303	.0823	.9344	.7864	.6385	.4906	.3426	.1947	.0467	.8988	.6029	.3070	.0111
032	.2305	.0826	.9346	.7867	.6388	.4908	.3429	.1949	.0470	.8991	.6032	.3073	.0115
426035	33.2307	34.0828	34.9349	35.7869	36.6390	37.4911	38.3432	39.1952	40.0473	40.8994	42.6035	44.3076	46.0118
038	.2310	.0830	.9351	.7872	.6393	.4913	.3434	.1955	.0476	.8996	.6038	.3080	.0121
041	.2312	.0833	.9354	.7874	.6395	.4916	.3437	.1958	.0479	.8999	.6041	.3083	.0124
044	.2314	.0835	.9356	.7877	.6398	.4919	.3440	.1960	.0481	.9002	.6044	.3086	.0128
047	.2317	.0838	.9359	.7879	.6400	.4921	.3442	.1963	.0484	.9005	.6047	.3089	.0131
426050	33.2319	34.0840	34.9361	35.7882	36.6403	37.4924	38.3445	39.1966	40.0487	40.9008	42.6050	44.3092	46.0134
053	.2321	.0842	.9363	.7885	.6406	.4927	.3448	.1969	.0490	.9011	.6053	.3095	.0137
056	.2324	.0845	.9366	.7887	.6408	.4929	.3450	.1972	.0493	.9014	.6056	.3098	.0140
059	.2326	.0847	.9368	.7890	.6411	.4932	.3453	.1974	.0495	.9017	.6059	.3101	.0144
062	.2328	.0850	.9371	.7892	.6413	.4935	.3456	.1977	.0498	.9020	.6062	.3104	.0147
426065	33.2331	34.0852	34.9373	35.7895	36.6416	37.4937	38.3459	39.1980	40.0501	40.9022	42.6065	44.3108	46.0150
068	.2333	.0854	.9376	.7897	.6418	.4940	.3461	.1983	.0504	.9025	.6068	.3111	.0153
071	.2335	.0857	.9378	.7900	.6421	.4942	.3464	.1985	.0507	.9028	.6071	.3114	.0157
074	.2338	.0859	.9381	.7902	.6424	.4945	.3467	.1988	.0510	.9031	.6074	.3117	.0160
077	.2340	.0862	.9383	.7905	.6426	.4948	.3469	.1991	.0512	.9034	.6077	.3120	.0163
426080	33.2342	34.0864	34.9386	35.7907	36.6429	37.4950	38.3472	39.1994	40.0515	40.9037	42.6080	44.3123	46.0166
083	.2345	.0866	.9388	.7910	.6431	.4953	.3475	.1996	.0518	.9040	.6083	.3126	.0170
086	.2347	.0869	.9391	.7912	.6434	.4956	.3477	.1999	.0521	.9043	.6086	.3129	.0173
089	.2349	.0871	.9393	.7915	.6437	.4958	.3480	.2002	.0524	.9045	.6089	.3133	.0176
092	.2352	.0874	.9395	.7917	.6439	.4961	.3483	.2005	.0526	.9048	.6092	.3136	.0179
426095	33.2354	34.0876	34.9398	35.7920	36.6442	37.4964	38.3486	39.2007	40.0529	40.9051	42.6095	44.3139	46.0183
098	.2356	.0878	.9400	.7922	.6444	.4966	.3488	.2010	.0532	.9054	.6098	.3142	.0186
101	.2359	.0881	.9403	.7925	.6447	.4969	.3491	.2013	.0535	.9057	.6101	.3145	.0189
104	.2361	.0883	.9405	.7927	.6449	.4972	.3494	.2016	.0538	.9060	.6104	.3148	.0192
107	.2363	.0886	.9408	.7930	.6452	.4974	.3496	.2018	.0541	.9063	.6107	.3151	.0196
426110	33.2366	34.0888	34.9410	35.7932	36.6455	37.4977	38.3499	39.2021	40.0543	40.9066	42.6110	44.3154	46.0199
113	.2368	.0890	.9413	.7935	.6457	.4979	.3502	.2024	.0546	.9068	.6113	.3158	.0202
116	.2370	.0893	.9415	.7937	.6460	.4982	.3504	.2027	.0549	.9071	.6116	.3161	.0205
119	.2373	.0895	.9418	.7940	.6462	.4985	.3507	.2029	.0552	.9074	.6119	.3164	.0209
122	.2375	.0898	.9420	.7942	.6465	.4987	.3510	.2032	.0555	.9077	.6122	.3167	.0212
426125	33.2378	34.0900	34.9423	35.7945	36.6468	37.4990	38.3513	39.2035	40.0558	40.9080	42.6125	44.3170	46.0215
128	.2380	.0902	.9425	.7948	.6470	.4993	.3515	.2038	.0560	.9083	.6128	.3173	.0218
131	.2382	.0905	.9427	.7950	.6473	.4995	.3518	.2041	.0563	.9086	.6131	.3176	.0221
134	.2385	.0907	.9430	.7953	.6475	.4998	.3521	.2043	.0566	.9089	.6134	.3179	.0225
137	.2387	.0910	.9432	.7955	.6478	.5001	.3523	.2046	.0569	.9092	.6137	.3182	.0228
426140	33.2389	34.0912	34.9435	35.7958	36.6480	37.5003	38.3526	39.2049	40.0572	40.9094	42.6140	44.3186	46.0231
143	.2392	.0914	.9437	.7960	.6483	.5006	.3529	.2052	.0574	.9097	.6143	.3189	.0234
146	.2394	.0917	.9440	.7963	.6486	.5008	.3531	.2054	.0577	.9100	.6146	.3192	.0238
149	.2396	.0919	.9442	.7965	.6488	.5011	.3534	.2057	.0580	.9103	.6149	.3195	.0241
152	.2399	.0922	.9445	.7968	.6491	.5014	.3537	.2060	.0583	.9106	.6152	.3198	.0244
426155	33.2401	34.0924	34.9447	35.7970	36.6493	37.5016	38.3540	39.2063	40.0586	40.9109	42.6155	44.3201	46.0247
158	.2403	.0926	.9450	.7973	.6496	.5019	.3542	.2065	.0589	.9112	.6158	.3204	.0251
161	.2406	.0929	.9452	.7975	.6498	.5022	.3545	.2068	.0591	.9115	.6161	.3207	.0254
164	.2408	.0931	.9454	.7978	.6501	.5024	.3548	.2071	.0594	.9117	.6164	.3211	.0257
167	.2410	.0934	.9457	.7980	.6504	.5027	.3550	.2074	.0597	.9120	.6167	.3214	.0260
426170	33.2413	34.0936	34.9459	35.7983	36.6506	37.5030	38.3553	39.2076	40.0600	40.9123	42.6170	44.3217	46.0264
173	.2415	.0938	.9462	.7985	.6509	.5032	.3556	.2079	.0603	.9126	.6173	.3220	.0267
176	.2417	.0941	.9464	.7988	.6511	.5035	.3558	.2082	.0605	.9129	.6176	.3223	.0270
179	.2420	.0943	.9467	.7990	.6514	.5038	.3561	.2085	.0608	.9132	.6179	.3226	.0273
182	.2422	.0946	.9469	.7993	.6517	.5040	.3564	.2087	.0611	.9135	.6182	.3229	.0277
426185	33.2424	34.0948	34.9472	35.7995	36.6519	37.5043	38.3567	39.2090	40.0614	40.9138	42.6185	44.3232	46.0280
188	.2427	.0950	.9474	.7998	.6522	.5045	.3569	.2093	.0617	.9140	.6188	.3236	.0283
191	.2429	.0953	.9477	.8000	.6524	.5048	.3572	.2096	.0620	.9143	.6191	.3239	.0286
194	.2431	.0955	.9479	.8003	.6527	.5051	.3575	.2098	.0622	.9146	.6194	.3242	.0290
197	.2434	.0958	.9482	.8005	.6529	.5053	.3577	.2101	.0625	.9149	.6197	.3245	.0293
426200	33.2436	34.0960	34.9484	35.8008	36.6532	37.5056	38.3580	39.2104	40.0628	40.9152	42.6200	44.3248	46.0296

H A R M O N I C S

BASIC FREQ.	52	54	56	58	60	62	64	66	68	70	72	74	76
426200	22.1624	23.0148	23.8672	24.7196	25.5720	26.4244	27.2768	28.1292	28.9816	29.8340	30.6864	31.5388	32.3912
203	.1626	.0150	.8674	.7198	.5722	.4246	.2770	.1294	.9818	.8342	.6866	.5390	.3914
206	.1627	.0151	.8675	.7199	.5724	.4248	.2772	.1296	.9820	.8344	.6868	.5392	.3917
209	.1629	.0153	.8677	.7201	.5725	.4250	.2774	.1298	.9822	.8346	.6870	.5395	.3919
212	.1630	.0154	.8679	.7203	.5727	.4251	.2776	.1300	.9824	.8348	.6873	.5397	.3921
426215	22.1632	23.0156	23.8680	24.7205	25.5729	26.4253	27.2778	28.1302	28.9826	29.8351	30.6875	31.5399	32.3923
218	.1633	.0158	.8682	.7206	.5731	.4255	.2780	.1304	.9828	.8353	.6877	.5401	.3926
221	.1635	.0159	.8684	.7208	.5733	.4257	.2781	.1306	.9830	.8355	.6879	.5404	.3928
224	.1636	.0161	.8685	.7210	.5734	.4259	.2783	.1308	.9832	.8357	.6881	.5406	.3930
227	.1638	.0163	.8687	.7212	.5736	.4261	.2785	.1310	.9834	.8359	.6883	.5408	.3933
426230	22.1640	23.0164	23.8689	24.7213	25.5738	26.4263	27.2787	28.1312	28.9836	29.8361	30.6886	31.5410	32.3935
233	.1641	.0166	.8690	.7215	.5740	.4264	.2789	.1314	.9838	.8363	.6888	.5412	.3937
236	.1643	.0167	.8692	.7217	.5742	.4266	.2791	.1316	.9840	.8365	.6890	.5415	.3939
239	.1644	.0169	.8694	.7219	.5743	.4268	.2793	.1318	.9843	.8367	.6892	.5417	.3942
242	.1646	.0171	.8696	.7220	.5745	.4270	.2795	.1320	.9845	.8369	.6894	.5419	.3944
426245	22.1647	23.0172	23.8697	24.7222	25.5747	26.4272	27.2797	28.1322	28.9847	29.8372	30.6896	31.5421	32.3946
248	.1649	.0174	.8699	.7224	.5749	.4274	.2799	.1324	.9849	.8374	.6899	.5424	.3948
251	.1651	.0176	.8701	.7226	.5751	.4276	.2801	.1326	.9851	.8376	.6901	.5426	.3951
254	.1652	.0177	.8702	.7227	.5752	.4277	.2803	.1328	.9853	.8378	.6903	.5428	.3953
257	.1654	.0179	.8704	.7229	.5754	.4279	.2804	.1330	.9855	.8380	.6905	.5430	.3955
426260	22.1655	23.0180	23.8706	24.7231	25.5756	26.4281	27.2806	28.1332	28.9857	29.8382	30.6907	31.5432	32.3958
263	.1657	.0182	.8707	.7233	.5758	.4283	.2808	.1334	.9859	.8384	.6909	.5435	.3960
266	.1658	.0184	.8709	.7234	.5760	.4285	.2810	.1336	.9861	.8386	.6912	.5437	.3962
269	.1660	.0185	.8711	.7236	.5761	.4287	.2812	.1338	.9863	.8388	.6914	.5439	.3964
272	.1661	.0187	.8712	.7238	.5763	.4289	.2814	.1340	.9865	.8390	.6916	.5441	.3967
426275	22.1663	23.0189	23.8714	24.7240	25.5765	26.4291	27.2816	28.1342	28.9867	29.8393	30.6918	31.5444	32.3969
278	.1665	.0190	.8716	.7241	.5767	.4292	.2818	.1343	.9869	.8395	.6920	.5446	.3971
281	.1666	.0192	.8717	.7243	.5769	.4294	.2820	.1345	.9871	.8397	.6922	.5448	.3974
284	.1668	.0193	.8719	.7245	.5770	.4296	.2822	.1347	.9873	.8399	.6924	.5450	.3976
287	.1669	.0195	.8721	.7246	.5772	.4298	.2824	.1349	.9875	.8401	.6927	.5452	.3978
426290	22.1671	23.0197	23.8722	24.7248	25.5774	26.4300	27.2826	28.1351	28.9877	29.8403	30.6929	31.5455	32.3980
293	.1672	.0198	.8724	.7250	.5776	.4302	.2828	.1353	.9879	.8405	.6931	.5457	.3983
296	.1674	.0200	.8726	.7252	.5778	.4304	.2829	.1355	.9881	.8407	.6933	.5459	.3985
299	.1675	.0201	.8727	.7253	.5779	.4305	.2831	.1357	.9883	.8409	.6935	.5461	.3987
302	.1677	.0203	.8729	.7255	.5781	.4307	.2833	.1359	.9885	.8411	.6937	.5463	.3990
426305	22.1679	23.0205	23.8731	24.7257	25.5783	26.4309	27.2835	28.1361	28.9887	29.8414	30.6940	31.5466	32.3992
308	.1680	.0206	.8732	.7259	.5785	.4311	.2837	.1363	.9889	.8416	.6942	.5468	.3994
311	.1682	.0208	.8734	.7260	.5787	.4313	.2839	.1365	.9891	.8418	.6944	.5470	.3996
314	.1683	.0210	.8736	.7262	.5788	.4315	.2841	.1367	.9894	.8420	.6946	.5472	.3999
317	.1685	.0211	.8738	.7264	.5790	.4317	.2843	.1369	.9896	.8422	.6948	.5475	.4001
426320	22.1686	23.0213	23.8739	24.7266	25.5792	26.4318	27.2845	28.1371	28.9898	29.8424	30.6950	31.5477	32.4003
323	.1688	.0214	.8741	.7267	.5794	.4320	.2847	.1373	.9900	.8426	.6953	.5479	.4005
326	.1690	.0216	.8743	.7269	.5796	.4322	.2849	.1375	.9902	.8428	.6955	.5481	.4008
329	.1691	.0218	.8744	.7271	.5797	.4324	.2851	.1377	.9904	.8430	.6957	.5483	.4010
332	.1693	.0219	.8746	.7273	.5799	.4326	.2852	.1379	.9906	.8432	.6959	.5486	.4012
426335	22.1694	23.0221	23.8748	24.7274	25.5801	26.4328	27.2854	28.1381	28.9908	29.8435	30.6961	31.5488	32.4015
338	.1696	.0223	.8749	.7276	.5803	.4330	.2856	.1383	.9910	.8437	.6963	.5490	.4017
341	.1697	.0224	.8751	.7278	.5805	.4331	.2858	.1385	.9912	.8439	.6966	.5492	.4019
344	.1699	.0226	.8753	.7280	.5806	.4333	.2860	.1387	.9914	.8441	.6968	.5495	.4021
347	.1700	.0227	.8754	.7281	.5808	.4335	.2862	.1389	.9916	.8443	.6970	.5497	.4024
426350	22.1702	23.0229	23.8756	24.7283	25.5810	26.4337	27.2864	28.1391	28.9918	29.8445	30.6972	31.5499	32.4026
353	.1704	.0231	.8758	.7285	.5812	.4339	.2866	.1393	.9920	.8447	.6974	.5501	.4028
356	.1705	.0232	.8759	.7286	.5814	.4341	.2868	.1395	.9922	.8449	.6976	.5503	.4031
359	.1707	.0234	.8761	.7288	.5815	.4343	.2870	.1397	.9924	.8451	.6978	.5506	.4033
362	.1708	.0235	.8763	.7290	.5817	.4344	.2872	.1399	.9926	.8453	.6981	.5508	.4035
426365	22.1710	23.0237	23.8764	24.7292	25.5819	26.4346	27.2874	28.1401	28.9928	29.8456	30.6983	31.5510	32.4037
368	.1711	.0239	.8766	.7293	.5821	.4348	.2876	.1403	.9930	.8458	.6985	.5512	.4040
371	.1713	.0240	.8768	.7295	.5823	.4350	.2877	.1405	.9932	.8460	.6987	.5515	.4042
374	.1714	.0242	.8769	.7297	.5824	.4352	.2879	.1407	.9934	.8462	.6989	.5517	.4044
377	.1716	.0244	.8771	.7299	.5826	.4354	.2881	.1409	.9936	.8464	.6991	.5519	.4047
426380	22.1718	23.0245	23.8773	24.7300	25.5828	26.4356	27.2883	28.1411	28.9938	29.8466	30.6994	31.5521	32.4049
383	.1719	.0247	.8774	.7302	.5830	.4357	.2885	.1413	.9940	.8468	.6996	.5523	.4051
386	.1721	.0248	.8776	.7304	.5832	.4359	.2887	.1415	.9942	.8470	.6998	.5526	.4053
389	.1722	.0250	.8778	.7306	.5833	.4361	.2889	.1417	.9945	.8472	.7000	.5528	.4056
392	.1724	.0252	.8780	.7307	.5835	.4363	.2891	.1419	.9947	.8474	.7002	.5530	.4058
426395	22.1725	23.0253	23.8781	24.7309	25.5837	26.4365	27.2893	28.1421	28.9949	29.8477	30.7004	31.5532	32.4060
398	.1727	.0255	.8783	.7311	.5839	.4367	.2895	.1423	.9951	.8479	.7007	.5535	.4062
401	.1729	.0257	.8785	.7313	.5841	.4369	.2897	.1425	.9953	.8481	.7009	.5537	.4065
404	.1730	.0258	.8786	.7314	.5842	.4370	.2899	.1427	.9955	.8483	.7011	.5539	.4067
407	.1732	.0260	.8788	.7316	.5844	.4372	.2900	.1429	.9957	.8485	.7013	.5541	.4069
426410	22.1733	23.0261	23.8790	24.7318	25.5846	26.4374	27.2902	28.1431	28.9959	29.8487	30.7015	31.5543	32.4072
413	.1735	.0263	.8791	.7320	.5848	.4376	.2904	.1433	.9961	.8489	.7017	.5546	.4074
416	.1736	.0265	.8793	.7321	.5850	.4378	.2906	.1435	.9963	.8491	.7020	.5548	.4076
419	.1738	.0266	.8795	.7323	.5851	.4380	.2908	.1437	.9965	.8493	.7022	.5550	.4078
422	.1739	.0268	.8796	.7325	.5853	.4382	.2910	.1439	.9967	.8495	.7024	.5552	.4081
426425	22.1741	23.0270	23.8798	24.7327	25.5855	26.4384	27.2912	28.1441	28.9969	29.8498	30.7026	31.5555	32.4083
428	.1743	.0271	.8800	.7328	.5857	.4385	.2914	.1442	.9971	.8500	.7028	.5557	.4085
431	.1744	.0273	.8801	.7330	.5859	.4387	.2916	.1444	.9973	.8502	.7030	.5559	.4088
434	.1746	.0274	.8803	.7332	.5860	.4389	.2918	.1446	.9975	.8504	.7032	.5561	.4090
437	.1747	.0276	.8805	.7333	.5862	.4391	.2920	.1448	.9977	.8506	.7035	.5563	.4092
426440	22.1749	23.0278	23.8806	24.7335	25.5864	26.4393	27.2922	28.1450	28.9979	29.8508	30.7037	31.5566	32.4094
443	.1750	.0279	.8808	.7337	.5866	.4395	.2924	.1452	.9981	.8510	.7039	.5568	.4097
446	.1752	.0281	.8810	.7339	.5868	.4397	.2925	.1454	.9983	.8512	.7041	.5570	.4099
449	.1753	.0282	.8811	.7340	.5869	.4398	.2927	.1456	.9985	.8514	.7043	.5572	.4101
452	.1755	.0284	.8813	.7342	.5871	.4400	.2929	.1458	.9987	.8516	.7045	.5574	.4104
426455	22.1757	23.0286	23.8815	24.7344	25.5873	26.4402	27.2931	28.1460	28.9989	29.8519	30.7048	31.5577	32.4106
458	.1758	.0287	.8816	.7346	.5875	.4404	.2933	.1462	.9991	.8521	.7050	.5579	.4108
461	.1760	.0289	.8818	.7347	.5877	.4406	.2935	.1464	.9993	.8523	.7052	.5581	.4110
464	.1761	.0291	.8820	.7349	.5878	.4408	.2937	.1466	.9996	.8525	.7054	.5583	.4113
467	.1763	.0292	.8822	.7351	.5880	.4410	.2939	.1468	.9998	.8527	.7056	.5586	.4115
426470	22.1764	23.0294	23.8823	24.7353	25.5882	26.4411	27.2941	28.1470	29.0000	29.8529	30.7058	31.5588	32.4117
473	.1766	.0295	.8825	.7354	.5884	.4413	.2943	.1472	.0002	.8531	.7061	.5590	.4119
476	.1768	.0297	.8827	.7356	.5886	.4415	.2945	.1474	.0004	.8533	.7063	.5592	.4122
479	.1769	.0299	.8828	.7358	.5887	.4417	.2947	.1476	.0006	.8535	.7065	.5594	.4124
482	.1771	.0300	.8830	.7360	.5889	.4419	.2948	.1478	.0008	.8537	.7067	.5597	.4126
426485	22.1772	23.0302	23.8832	24.7361	25.5891	26.4421	27.2950	28.1480	29.0010	29.8540	30.7069	31.5599	32.4129
488	.1774	.0304	.8833	.7363	.5893	.4423	.2952	.1482	.0012	.8542	.7071	.5601	.4131
491	.1775	.0305	.8835	.7365	.5895	.4424	.2954	.1484	.0014	.8544	.7074	.5603	.4133
494	.1777	.0307	.8837	.7367	.5896	.4426	.2956	.1486	.0016	.8546	.7076	.5606	.4135
497	.1778	.0308	.8838	.7368	.5898	.4428	.2958	.1488	.0018	.8548	.7078	.5608	.4138
426500	22.1780	23.0310	23.8840	24.7370	25.5900	26.4430	27.2960	28.1490	29.0020	29.8550	30.7080	31.5610	32.4140

H A R M O N I C S

BASIC FREQ.	78	80	82	84	86	88	90	92	94	96	100	104	108
426200	33.2436	34.0960	34.9484	35.8008	36.6532	37.5056	38.3580	39.2104	40.0628	40.9152	42.6200	44.3248	46.0296
203	.2438	.0962	.9486	.8011	.6535	.5059	.3583	.2107	.0631	.9155	.6203	.3251	.0299
206	.2441	.0965	.9489	.8013	.6537	.5061	.3585	.2110	.0634	.9158	.6206	.3254	.0302
209	.2443	.0967	.9491	.8016	.6540	.5064	.3588	.2112	.0636	.9161	.6209	.3257	.0306
212	.2445	.0970	.9494	.8018	.6542	.5067	.3591	.2115	.0639	.9164	.6212	.3260	.0309
426215	33.2448	34.0972	34.9496	35.8021	36.6545	37.5069	38.3594	39.2118	40.0642	40.9166	42.6215	44.3264	46.0312
218	.2450	.0974	.9499	.8023	.6547	.5072	.3596	.2121	.0645	.9169	.6218	.3267	.0315
221	.2452	.0977	.9501	.8026	.6550	.5074	.3599	.2123	.0648	.9172	.6221	.3270	.0319
224	.2455	.0979	.9504	.8028	.6553	.5077	.3602	.2126	.0651	.9175	.6224	.3273	.0322
227	.2457	.0982	.9506	.8031	.6555	.5080	.3604	.2129	.0653	.9178	.6227	.3276	.0325
426230	33.2459	34.0984	34.9509	35.8033	36.6558	37.5082	38.3607	39.2132	40.0656	40.9181	42.6230	44.3279	46.0328
233	.2462	.0986	.9511	.8036	.6560	.5085	.3610	.2134	.0659	.9184	.6233	.3282	.0332
236	.2464	.0989	.9514	.8038	.6563	.5088	.3612	.2137	.0662	.9187	.6236	.3285	.0335
239	.2466	.0991	.9516	.8041	.6566	.5090	.3615	.2140	.0665	.9189	.6239	.3289	.0338
242	.2469	.0994	.9518	.8043	.6568	.5093	.3618	.2143	.0667	.9192	.6242	.3292	.0341
426245	33.2471	34.0996	34.9521	35.8046	36.6571	37.5096	38.3621	39.2145	40.0670	40.9195	42.6245	44.3295	46.0345
248	.2473	.0998	.9523	.8048	.6573	.5098	.3623	.2148	.0673	.9198	.6248	.3298	.0348
251	.2476	.1001	.9526	.8051	.6576	.5101	.3626	.2151	.0676	.9201	.6251	.3301	.0351
254	.2478	.1003	.9528	.8053	.6578	.5104	.3629	.2154	.0679	.9204	.6254	.3304	.0354
257	.2480	.1006	.9531	.8056	.6581	.5106	.3631	.2156	.0682	.9207	.6257	.3307	.0358
426260	33.2483	34.1008	34.9533	35.8058	36.6584	37.5109	38.3634	39.2159	40.0684	40.9210	42.6260	44.3310	46.0361
263	.2485	.1010	.9536	.8061	.6586	.5111	.3637	.2162	.0687	.9212	.6263	.3314	.0364
266	.2487	.1013	.9538	.8063	.6589	.5114	.3639	.2165	.0690	.9215	.6266	.3317	.0367
269	.2490	.1015	.9541	.8066	.6591	.5117	.3642	.2167	.0693	.9218	.6269	.3320	.0371
272	.2492	.1018	.9543	.8068	.6594	.5119	.3645	.2170	.0696	.9221	.6272	.3323	.0374
426275	33.2495	34.1020	34.9546	35.8071	36.6597	37.5122	38.3648	39.2173	40.0699	40.9224	42.6275	44.3326	46.0377
278	.3497	.1022	.9548	.8074	.6599	.5125	.3650	.2176	.0701	.9227	.6278	.3329	.0380
281	.2499	.1025	.9550	.8076	.6602	.5127	.3653	.2179	.0704	.9230	.6281	.3332	.0383
284	.2502	.1027	.9553	.8079	.6604	.5130	.3656	.2181	.0707	.9233	.6284	.3335	.0387
287	.2504	.1030	.9555	.8081	.6607	.5133	.3658	.2184	.0710	.9236	.6287	.3338	.0390
426290	33.2506	34.1032	34.9558	35.8084	36.6609	37.5135	38.3661	39.2187	40.0713	40.9238	42.6290	44.3342	46.0393
293	.2509	.1034	.9560	.8086	.6612	.5138	.3664	.2190	.0715	.9241	.6293	.3345	.0396
296	.2511	.1037	.9563	.8089	.6615	.5140	.3666	.2192	.0718	.9244	.6296	.3348	.0400
299	.2513	.1039	.9565	.8091	.6617	.5143	.3669	.2195	.0721	.9247	.6299	.3351	.0403
302	.2516	.1042	.9568	.8094	.6620	.5146	.3672	.2198	.0724	.9250	.6302	.3354	.0406
426305	33.2518	34.1044	34.9570	35.8096	36.6622	37.5148	38.3675	39.2201	40.0727	40.9253	42.6305	44.3357	46.0409
308	.2520	.1046	.9573	.8099	.6625	.5151	.3677	.2203	.0730	.9256	.6308	.3360	.0413
311	.2523	.1049	.9575	.8101	.6627	.5154	.3680	.2206	.0732	.9259	.6311	.3363	.0416
314	.2525	.1051	.9577	.8104	.6630	.5156	.3683	.2209	.0735	.9261	.6314	.3367	.0419
317	.2527	.1054	.9580	.8106	.6633	.5159	.3685	.2212	.0738	.9264	.6317	.3370	.0422
426320	33.2530	34.1056	34.9582	35.8109	36.6635	37.5162	38.3688	39.2214	40.0741	40.9267	42.6320	44.3373	46.0426
323	.2532	.1058	.9585	.8111	.6638	.5164	.3691	.2217	.0744	.9270	.6323	.3376	.0429
326	.2534	.1061	.9587	.8114	.6640	.5167	.3693	.2220	.0746	.9273	.6326	.3379	.0432
329	.2537	.1063	.9590	.8116	.6643	.5170	.3696	.2223	.0749	.9276	.6329	.3382	.0435
332	.2539	.1066	.9592	.8119	.6646	.5172	.3699	.2225	.0752	.9279	.6332	.3385	.0439
426335	33.2541	34.1068	34.9595	35.8121	36.6648	37.5175	38.3702	39.2228	40.0755	40.9282	42.6335	44.3388	46.0442
338	.2544	.1070	.9597	.8124	.6651	.5177	.3704	.2231	.0758	.9284	.6338	.3392	.0445
341	.2546	.1073	.9600	.8126	.6653	.5180	.3707	.2234	.0761	.9287	.6341	.3395	.0448
344	.2548	.1075	.9602	.8129	.6656	.5183	.3710	.2236	.0763	.9290	.6344	.3398	.0452
347	.2551	.1078	.0605	.8131	.6658	.5185	.3712	.2239	.0766	.9293	.6347	.3401	.0455
426350	33.2553	34.1080	34.9607	35.8134	36.6661	37.5188	38.3715	39.2242	40.0769	40.9296	42.6350	44.3404	46.0458
353	.2555	.1082	.9609	.8137	.6664	.5191	.3718	.2245	.0772	.9299	.6353	.3407	.0461
356	.2558	.1085	.9612	.8139	.6666	.5193	.3720	.2248	.0775	.9302	.6356	.3410	.0464
359	.2560	.1087	.9614	.8142	.6669	.5196	.3723	.2250	.0777	.9305	.6359	.3413	.0468
362	.2562	.1090	.9617	.8144	.6671	.5199	.3726	.2253	.0780	.9308	.6362	.3416	.0471
426365	33.2565	34.1092	34.9619	35.8147	36.6674	37.5201	38.3729	39.2256	40.0783	40.9310	42.6365	44.3420	46.0474
368	.2567	.1094	.9622	.8149	.6676	.5204	.3731	.2259	.0786	.9313	.6368	.3423	.0477
371	.2569	.1097	.9624	.8152	.6679	.5206	.3734	.2261	.0789	.9316	.6371	.3426	.0481
374	.2572	.1099	.9627	.8154	.6682	.5209	.3737	.2264	.0792	.9319	.6374	.3429	.0484
377	.2574	.1102	.9629	.8157	.6684	.5212	.3739	.2267	.0794	.9322	.6377	.3432	.0487
426380	33.2576	34.1104	34.9632	35.8159	36.6687	37.5214	38.3742	39.2270	40.0797	40.9325	42.6380	44.3435	46.0490
383	.2579	.1106	.9634	.8162	.6689	.5217	.3745	.2272	.0800	.9328	.6383	.3438	.0494
386	.2581	.1109	.9637	.8164	.6692	.5220	.3747	.2275	.0803	.9331	.6386	.3441	.0497
389	.2583	.1111	.9639	.8167	.6695	.5222	.3750	.2278	.0806	.9333	.6389	.3445	.0500
392	.2586	.1114	.9641	.8169	.6697	.5225	.3753	.2281	.0808	.9336	.6392	.3448	.0503
426395	33.2588	34.1116	34.9644	35.8172	36.6700	37.5228	38.3756	39.2283	40.0811	40.9339	42.6395	44.3451	46.0507
398	.2590	.1118	.9646	.8174	.6702	.5230	.3758	.2286	.0814	.9342	.6398	.3454	.0510
401	.2593	.1121	.9649	.8177	.6705	.5233	.3761	.2289	.0817	.9345	.6401	.3457	.0513
404	.2595	.1123	.9651	.8179	.6707	.5236	.3764	.2292	.0820	.9348	.6404	.3460	.0516
407	.2597	.1126	.9654	.8182	.6710	.5238	.3766	.2294	.0823	.9351	.6407	.3463	.0520
426410	33.2600	34.1128	34.9656	35.8184	36.6713	37.5241	38.3769	39.2297	40.0825	40.9354	42.6410	44.3466	46.0523
413	.2602	.1130	.9659	.8187	.6715	.5243	.3772	.2300	.0828	.9356	.6413	.3470	.0526
416	.2604	.1133	.9661	.8189	.6718	.5246	.3774	.2303	.0831	.9359	.6416	.3473	.0529
419	.2607	.1135	.9664	.8192	.6720	.5249	.3777	.2305	.0834	.9362	.6419	.3476	.0533
422	.2609	.1138	.9666	.8194	.6723	.5251	.3780	.2308	.0837	.9365	.6422	.3479	.0536
426425	33.2612	34.1140	34.9669	35.8197	36.6726	37.5254	38.3783	39.2311	40.0840	40.9368	42.6425	44.3482	46.0539
428	.2614	.1142	.9671	.8200	.6728	.5257	.3785	.2314	.0842	.9371	.6428	.3485	.0542
431	.2616	.1145	.9673	.8202	.6731	.5259	.3788	.2317	.0845	.9374	.6431	.3488	.0545
434	.2619	.1147	.9676	.8205	.6733	.5262	.3791	.2319	.0848	.9377	.6434	.3491	.0549
437	.2621	.1150	.9678	.8207	.6736	.5265	.3793	.2322	.0851	.9380	.6437	.3494	.0552
426440	33.2623	34.1152	34.9681	35.8210	36.6738	37.5267	38.3796	39.2325	40.0854	40.9382	42.6440	44.3498	46.0555
443	.2626	.1154	.9683	.8212	.6741	.5270	.3799	.2328	.0856	.9385	.6443	.3501	.0558
446	.2628	.1157	.9686	.8215	.6744	.5272	.3801	.2330	.0859	.9388	.6446	.3504	.0562
449	.2630	.1159	.9688	.8217	.6746	.5275	.3804	.2333	.0862	.9391	.6449	.3507	.0565
452	.2633	.1162	.9691	.8220	.6749	.5278	.3807	.2336	.0865	.9394	.6452	.3510	.0568
426455	33.2635	34.1164	34.9693	35.8222	36.6751	37.5280	38.3810	39.2339	40.0868	40.9397	42.6455	44.3513	46.0571
458	.2637	.1166	.9696	.8225	.6754	.5283	.3812	.2341	.0871	.9400	.6458	.3516	.0575
461	.2640	.1169	.9698	.8227	.6756	.5286	.3815	.2344	.0873	.9403	.6461	.3519	.0578
464	.2642	.1171	.9700	.8230	.6759	.5288	.3818	.2347	.0876	.9405	.6464	.3523	.0581
467	.2644	.1174	.9703	.8232	.6762	.5291	.3820	.2350	.0879	.9408	.6467	.3526	.0584
426470	33.2647	34.1176	34.9705	35.8235	36.6764	37.5294	38.3823	39.2352	40.0882	40.9411	42.6470	44.3529	46.0588
473	.2649	.1178	.9708	.8237	.6767	.5296	.3826	.2355	.0885	.9414	.6473	.3532	.0591
476	.2651	.1181	.9710	.8240	.6769	.5299	.3828	.2358	.0887	.9417	.6476	.3535	.0594
479	.2654	.1183	.9713	.8242	.6772	.5302	.3831	.2361	.0890	.9420	.6479	.3538	.0597
482	.2656	.1186	.9715	.8245	.6775	.5304	.3834	.2363	.0893	.9423	.6482	.3541	.0601
426485	33.2658	34.1188	34.9718	35.8247	36.6777	37.5307	38.3837	39.2366	40.0896	40.9426	42.6485	44.3544	46.0604
488	.2661	.1190	.9720	.8250	.6780	.5309	.3839	.2369	.0899	.9428	.6488	.3548	.0607
491	.2663	.1193	.9723	.8252	.6782	.5312	.3842	.2372	.0902	.9431	.6491	.3551	.0610
494	.2665	.1195	.9725	.8255	.6785	.5315	.3845	.2374	.0904	.9434	.6494	.3554	.0614
497	.2668	.1198	.9728	.8257	.6787	.5317	.3847	.2377	.0907	.9437	.6497	.3557	.0617
426500	33.2670	34.1200	34.9730	35.8260	36.6790	37.5320	38.3850	39.2380	40.0910	40.9440	42.6500	44.3560	46.0620

MEGACYCLES PER SECOND

H A R M O N I C S

BASIC FREQ.	52	54	56	58	60	62	64	66	68	70	72	74	76
426500	22.1780	23.0310	23.8840	24.7370	25.5900	26.4430	27.2960	28.1490	29.0020	29.8550	30.7080	31.5610	32.4140
503	.1782	.0312	.8842	.7372	.5902	.4432	.2962	.1492	.0022	.8552	.7082	.5612	.4142
506	.1783	.0313	.8843	.7373	.5904	.4434	.2964	.1494	.0024	.8554	.7084	.5614	.4145
509	.1785	.0315	.8845	.7375	.5905	.4436	.2966	.1496	.0026	.8556	.7086	.5617	.4147
512	.1786	.0316	.8847	.7377	.5907	.4437	.2968	.1498	.0028	.8558	.7089	.5619	.4149
426515	22.1788	23.0318	23.8848	24.7379	25.5909	26.4439	27.2970	28.1500	29.0030	29.8561	30.7091	31.5621	32.4151
518	.1789	.0320	.8850	.7380	.5911	.4441	.2972	.1502	.0032	.8563	.7094	.5623	.4154
521	.1791	.0321	.8852	.7382	.5913	.4443	.2973	.1504	.0034	.8565	.7095	.5626	.4156
524	.1792	.0323	.8853	.7384	.5914	.4445	.2975	.1506	.0036	.8567	.7097	.5628	.4158
527	.1794	.0325	.8855	.7386	.5916	.4447	.2977	.1508	.0038	.8569	.7099	.5630	.4161
426530	22.1796	23.0326	23.8857	24.7387	25.5918	26.4449	27.2979	28.1510	29.0040	29.8571	30.7102	31.5632	32.4163
533	.1797	.0328	.8858	.7389	.5920	.4450	.2981	.1512	.0042	.8573	.7104	.5634	.4165
536	.1799	.0329	.8860	.7391	.5922	.4452	.2983	.1514	.0044	.8575	.7106	.5637	.4167
539	.1800	.0331	.8862	.7393	.5923	.4454	.2985	.1516	.0047	.8577	.7108	.5639	.4170
542	.1802	.0333	.8864	.7394	.5925	.4456	.2987	.1518	.0049	.8579	.7110	.5641	.4172
426545	22.1803	23.0334	23.8865	24.7396	25.5927	26.4458	27.2989	28.1520	29.0051	29.8582	30.7112	31.5643	32.4174
548	.1805	.0336	.8867	.7398	.5929	.4460	.2991	.1522	.0053	.8584	.7115	.5646	.4176
551	.1807	.0338	.8869	.7400	.5931	.4462	.2993	.1524	.0055	.8586	.7117	.5648	.4179
554	.1808	.0339	.8870	.7401	.5932	.4463	.2995	.1526	.0057	.8588	.7119	.5650	.4181
557	.1810	.0341	.8872	.7403	.5934	.4465	.2996	.1528	.0059	.8590	.7121	.5652	.4183
426560	22.1811	23.0342	23.8874	24.7405	25.5936	26.4467	27.2998	28.1530	29.0061	29.8592	30.7123	31.5654	32.4186
563	.1813	.0344	.8875	.7407	.5938	.4469	.3000	.1532	.0063	.8594	.7125	.5657	.4188
566	.1814	.0346	.8877	.7408	.5940	.4471	.3002	.1534	.0065	.8596	.7128	.5659	.4190
569	.1816	.0347	.8879	.7410	.5941	.4473	.3004	.1536	.0067	.8598	.7130	.5661	.4192
572	.1817	.0349	.8880	.7412	.5943	.4475	.3006	.1538	.0069	.8600	.7132	.5663	.4195
426575	22.1819	23.0351	23.8882	24.7414	25.5945	26.4477	27.3008	28.1540	29.0071	29.8603	30.7134	31.5666	32.4197
578	.1821	.0352	.8884	.7415	.5947	.4478	.3010	.1541	.0073	.8605	.7136	.5668	.4199
581	.1822	.0354	.8885	.7417	.5949	.4480	.3012	.1543	.0075	.8607	.7138	.5670	.4202
584	.1824	.0355	.8887	.7419	.5950	.4482	.3014	.1545	.0077	.8609	.7140	.5672	.4204
587	.1825	.0357	.8889	.7420	.5952	.4484	.3016	.1547	.0079	.8611	.7143	.5674	.4206
426590	22.1827	23.0359	23.8890	24.7422	25.5954	26.4486	27.3018	28.1549	29.0081	29.8613	30.7145	31.5677	32.4208
593	.1828	.0360	.8892	.7424	.5956	.4488	.3020	.1551	.0083	.8615	.7147	.5679	.4211
596	.1830	.0362	.8894	.7426	.5958	.4490	.3021	.1553	.0085	.8617	.7149	.5681	.4213
599	.1831	.0363	.8895	.7427	.5959	.4491	.3023	.1555	.0087	.8619	.7151	.5683	.4215
602	.1833	.0365	.8897	.7429	.5961	.4493	.3025	.1557	.0089	.8621	.7153	.5685	.4218
426605	22.1835	23.0367	23.8899	24.7431	25.5963	26.4495	27.3027	28.1559	29.0091	29.8624	30.7156	31.5688	32.4220
608	.1836	.0368	.8900	.7433	.5965	.4497	.3029	.1561	.0093	.8626	.7158	.5690	.4222
611	.1838	.0370	.8902	.7434	.5967	.4499	.3031	.1563	.0095	.8628	.7160	.5692	.4224
614	.1839	.0372	.8904	.7436	.5968	.4501	.3033	.1565	.0098	.8630	.7162	.5694	.4227
617	.1841	.0373	.8906	.7438	.5970	.4503	.3035	.1567	.0100	.8632	.7164	.5697	.4229
426620	22.1842	23.0375	23.8907	24.7440	25.5972	26.4504	27.3037	28.1569	29.0102	29.8634	30.7166	31.5699	32.4231
623	.1844	.0376	.8909	.7441	.5974	.4506	.3039	.1571	.0104	.8636	.7169	.5701	.4233
626	.1846	.0378	.8911	.7443	.5976	.4508	.3041	.1573	.0106	.8638	.7171	.5703	.4236
629	.1847	.0380	.8912	.7445	.5977	.4510	.3043	.1575	.0108	.8640	.7173	.5705	.4238
632	.1849	.0381	.8914	.7447	.5979	.4512	.3044	.1577	.0110	.8642	.7175	.5708	.4240
426635	22.1850	23.0383	23.8916	24.7448	25.5981	26.4514	27.3046	28.1579	29.0112	29.8645	30.7177	31.5710	32.4243
638	.1852	.0385	.8917	.7450	.5983	.4516	.3048	.1581	.0114	.8647	.7179	.5712	.4245
641	.1853	.0386	.8919	.7452	.5985	.4517	.3050	.1583	.0116	.8649	.7182	.5714	.4247
644	.1855	.0388	.8921	.7454	.5986	.4519	.3052	.1585	.0118	.8651	.7184	.5717	.4249
647	.1856	.0389	.8922	.7455	.5988	.4521	.3054	.1587	.0120	.8653	.7186	.5719	.4252
426650	22.1858	23.0391	23.8924	24.7457	25.5990	26.4523	27.3056	28.1589	29.0122	29.8655	30.7188	31.5721	32.4254
653	.1860	.0393	.8926	.7459	.5992	.4525	.3058	.1591	.0124	.8657	.7190	.5723	.4256
656	.1861	.0394	.8927	.7460	.5994	.4527	.3060	.1593	.0126	.8659	.7192	.5725	.4259
659	.1863	.0396	.8929	.7462	.5995	.4529	.3062	.1595	.0128	.8661	.7194	.5728	.4261
662	.1864	.0397	.8931	.7464	.5997	.4530	.3064	.1597	.0130	.8663	.7197	.5730	.4263
426665	22.1866	23.0399	23.8932	24.7466	25.5999	26.4532	27.3066	28.1599	29.0132	29.8666	30.7199	31.5732	32.4265
668	.1867	.0401	.8934	.7467	.6001	.4534	.3068	.1601	.0134	.8668	.7201	.5734	.4268
671	.1869	.0402	.8936	.7469	.6003	.4536	.3069	.1603	.0136	.8670	.7203	.5737	.4270
674	.1870	.0404	.8937	.7471	.6004	.4538	.3071	.1605	.0138	.8672	.7205	.5739	.4272
677	.1872	.0406	.8939	.7473	.6006	.4540	.3073	.1607	.0140	.8674	.7207	.5741	.4275
426680	22.1874	23.0407	23.8941	24.7474	25.6008	26.4542	27.3075	28.1609	29.0142	29.8676	30.7210	31.5743	32.4277
683	.1875	.0409	.8942	.7476	.6010	.4543	.3077	.1611	.0144	.8678	.7212	.5745	.4279
686	.1877	.0410	.8944	.7478	.6012	.4545	.3079	.1613	.0146	.8680	.7214	.5748	.4281
689	.1878	.0412	.8946	.7480	.6013	.4547	.3081	.1615	.0149	.8682	.7216	.5750	.4284
692	.1880	.0414	.8948	.7481	.6015	.4549	.3083	.1617	.0151	.8684	.7218	.5752	.4286
426695	22.1881	23.0415	23.8949	24.7483	25.6017	26.4551	27.3085	28.1619	29.0153	29.8687	30.7220	31.5754	32.4288
698	.1883	.0417	.8951	.7485	.6019	.4553	.3087	.1621	.0155	.8689	.7223	.5757	.4290
701	.1885	.0419	.8953	.7487	.6021	.4555	.3089	.1623	.0157	.8691	.7225	.5759	.4293
704	.1886	.0420	.8954	.7488	.6022	.4556	.3091	.1625	.0159	.8693	.7227	.5761	.4295
707	.1888	.0422	.8956	.7490	.6024	.4558	.3092	.1627	.0161	.8695	.7229	.5763	.4297
426710	22.1889	23.0423	23.8958	24.7492	25.6026	26.4560	27.3094	28.1629	29.0163	29.8697	30.7231	31.5765	32.4300
713	.1891	.0425	.8959	.7494	.6028	.4562	.3096	.1631	.0165	.8699	.7233	.5768	.4302
716	.1892	.0427	.8961	.7495	.6030	.4564	.3098	.1633	.0167	.8701	.7236	.5770	.4304
719	.1894	.0428	.8963	.7497	.6031	.4566	.3100	.1635	.0169	.8703	.7238	.5772	.4306
722	.1895	.0430	.8964	.7499	.6033	.4568	.3102	.1637	.0171	.8705	.7240	.5774	.4309
426725	22.1897	23.0432	23.8966	24.7501	25.6035	26.4570	27.3104	28.1639	29.0173	29.8708	30.7242	31.5777	32.4311
728	.1899	.0433	.8968	.7502	.6037	.4571	.3106	.1640	.0175	.8710	.7244	.5779	.4313
731	.1900	.0435	.8969	.7504	.6039	.4573	.3108	.1642	.0177	.8712	.7246	.5781	.4316
734	.1902	.0436	.8971	.7506	.6040	.4575	.3110	.1644	.0179	.8714	.7248	.5783	.4318
737	.1903	.0438	.8973	.7507	.6042	.4577	.3112	.1646	.0181	.8716	.7251	.5785	.4320
426740	22.1905	23.0440	23.8974	24.7509	25.6044	26.4579	27.3114	28.1648	29.0183	29.8718	30.7253	31.5788	32.4322
743	.1906	.0441	.8976	.7511	.6046	.4581	.3116	.1650	.0185	.8720	.7255	.5790	.4325
746	.1908	.0443	.8978	.7513	.6048	.4583	.3117	.1652	.0187	.8722	.7257	.5792	.4327
749	.1909	.0444	.8979	.7514	.6049	.4584	.3119	.1654	.0189	.8724	.7259	.5794	.4329
752	.1911	.0446	.8981	.7516	.6051	.4586	.3121	.1656	.0191	.8726	.7261	.5796	.4332
426755	22.1913	23.0448	23.8983	24.7518	25.6053	26.4588	27.3123	28.1658	29.0193	29.8729	30.7264	31.5799	32.4334
758	.1914	.0449	.8984	.7520	.6055	.4590	.3125	.1660	.0195	.8731	.7266	.5801	.4336
761	.1916	.0451	.8986	.7521	.6057	.4592	.3127	.1662	.0197	.8733	.7268	.5803	.4338
764	.1917	.0453	.8988	.7523	.6058	.4594	.3129	.1664	.0200	.8735	.7270	.5805	.4341
767	.1919	.0454	.8990	.7525	.6060	.4596	.3131	.1666	.0202	.8737	.7272	.5808	.4343
426770	22.1920	23.0456	23.8991	24.7527	25.6062	26.4597	27.3133	28.1668	29.0204	29.8739	30.7274	31.5810	32.4345
773	.1922	.0457	.8993	.7528	.6064	.4599	.3135	.1670	.0206	.8741	.7277	.5812	.4347
776	.1924	.0459	.8995	.7530	.6066	.4601	.3137	.1672	.0208	.8743	.7279	.5814	.4350
779	.1925	.0461	.8996	.7532	.6067	.4603	.3139	.1674	.0210	.8745	.7281	.5816	.4352
782	.1927	.0462	.8998	.7534	.6069	.4605	.3140	.1676	.0212	.8747	.7283	.5819	.4354
426785	22.1928	23.0464	23.9000	24.7535	25.6071	26.4607	27.3142	28.1678	29.0214	29.8750	30.7285	31.5821	32.4357
788	.1930	.0466	.9001	.7537	.6073	.4609	.3144	.1680	.0216	.8752	.7287	.5823	.4359
791	.1931	.0467	.9003	.7539	.6075	.4610	.3146	.1682	.0218	.8754	.7290	.5825	.4361
794	.1933	.0469	.9005	.7541	.6076	.4612	.3148	.1684	.0220	.8756	.7292	.5828	.4363
797	.1934	.0470	.9006	.7542	.6078	.4614	.3150	.1686	.0222	.8758	.7294	.5830	.4366
426800	22.1936	23.0472	23.9008	24.7544	25.6080	26.4616	27.3152	28.1688	29.0224	29.8760	30.7296	31.5832	32.4368

MEGACYCLES PER SECOND

H A R M O N I C S

BASIC FREQ.	78	80	82	84	86	88	90	92	94	96	100	104	108
426500	33.2670	34.1200	34.9730	35.8260	36.6790	37.5320	38.3850	39.2380	40.0910	40.9440	42.6500	44.3560	46.0620
503	.2672	.1202	.9732	.8263	.6793	.5323	.3853	.2383	.0913	.9443	.6503	.3563	.0623
506	.2675	.1205	.9735	.8265	.6795	.5325	.3855	.2386	.0916	.9446	.6506	.3566	.0626
509	.2677	.1207	.9737	.8268	.6798	.5328	.3858	.2388	.0918	.9449	.6509	.3569	.0630
512	.2679	.1210	.9740	.8270	.6800	.5331	.3861	.2391	.0921	.9452	.6512	.3572	.0633
426515	33.2682	34.1212	34.9742	35.8273	36.6803	37.5333	38.3864	39.2394	40.0924	40.9454	42.6515	44.3576	46.0636
518	.2684	.1214	.9745	.8275	.6805	.5336	.3866	.2397	.0927	.9457	.6518	.3579	.0639
521	.2686	.1217	.9747	.8278	.6808	.5338	.3869	.2399	.0930	.9460	.6521	.3582	.0643
524	.2689	.1219	.9750	.8280	.6811	.5341	.3872	.2402	.0933	.9463	.6524	.3585	.0646
527	.2691	.1222	.9752	.8283	.6813	.5344	.3874	.2405	.0935	.9466	.6527	.3588	.0649
426530	33.2693	34.1224	34.9755	35.8285	36.6816	37.5346	38.3877	39.2408	40.0938	40.9469	42.6530	44.3591	46.0652
533	.2696	.1226	.9757	.8288	.6818	.5349	.3880	.2410	.0941	.9472	.6533	.3594	.0656
536	.2698	.1229	.9760	.8290	.6821	.5352	.3882	.2413	.0944	.9475	.6536	.3597	.0659
539	.2700	.1231	.9762	.8293	.6824	.5354	.3885	.2416	.0947	.9477	.6539	.3601	.0662
542	.2703	.1234	.9764	.8295	.6826	.5357	.3888	.2419	.0949	.9480	.6542	.3604	.0665
426545	33.2705	34.1236	34.9767	35.8298	36.6829	37.5360	38.3891	39.2421	40.0952	40.9483	42.6545	44.3607	46.0669
548	.2707	.1238	.9769	.8300	.6831	.5362	.3893	.2424	.0955	.9486	.6548	.3610	.0672
551	.2710	.1241	.9772	.8303	.6834	.5365	.3896	.2427	.0958	.9489	.6551	.3613	.0675
554	.2712	.1243	.9774	.8305	.6836	.5368	.3899	.2430	.0961	.9492	.6554	.3616	.0678
557	.2714	.1246	.9777	.8308	.6839	.5370	.3901	.2432	.0964	.9495	.6557	.3619	.0682
426560	33.2717	34.1248	34.9779	35.8310	36.6842	37.5373	38.3904	39.2435	40.0966	40.9498	42.6560	44.3622	46.0685
563	.2719	.1250	.9782	.8313	.6844	.5375	.3907	.2438	.0969	.9500	.6563	.3626	.0688
566	.2721	.1253	.9784	.8315	.6847	.5378	.3909	.2441	.0972	.9503	.6566	.3629	.0691
569	.2724	.1255	.9787	.8318	.6849	.5381	.3912	.2443	.0975	.9506	.6569	.3632	.0695
572	.2726	.1258	.9789	.8320	.6852	.5383	.3915	.2446	.0978	.9509	.6572	.3635	.0698
426575	33.2729	34.1260	34.9792	35.8323	36.6855	37.5386	38.3918	39.2449	40.0981	40.9512	42.6575	44.3638	46.0701
578	.2731	.1262	.9794	.8326	.6857	.5389	.3920	.2452	.0983	.9515	.6578	.3641	.0704
581	.2733	.1265	.9796	.8328	.6860	.5391	.3923	.2455	.0986	.9518	.6581	.3644	.0707
584	.2736	.1267	.9799	.8331	.6862	.5394	.3926	.2457	.0989	.9521	.6584	.3647	.0711
587	.2738	.1270	.9801	.8333	.6865	.5397	.3928	.2460	.0992	.9524	.6587	.3650	.0714
426590	33.2740	34.1272	34.9804	35.8336	36.6867	37.5399	38.3931	39.2463	40.0995	40.9526	42.6590	44.3654	46.0717
593	.2743	.1274	.9806	.8338	.6870	.5402	.3934	.2466	.0997	.9529	.6593	.3657	.0720
596	.2745	.1277	.9809	.8341	.6873	.5404	.3936	.2468	.1000	.9532	.6596	.3660	.0724
599	.2747	.1279	.9811	.8343	.6875	.5407	.3939	.2471	.1003	.9535	.6599	.3663	.0727
602	.2750	.1282	.9814	.8346	.6878	.5410	.3942	.2474	.1006	.9538	.6602	.3666	.0730
426605	33.2752	34.1284	34.9816	35.8348	36.6880	37.5412	38.3945	39.2477	40.1009	40.9541	42.6605	44.3669	46.0733
608	.2754	.1286	.9819	.8351	.6883	.5415	.3947	.2479	.1012	.9544	.6608	.3672	.0737
611	.2757	.1289	.9821	.8353	.6885	.5418	.3950	.2482	.1014	.9547	.6611	.3675	.0740
614	.2759	.1291	.9823	.8356	.6888	.5420	.3953	.2485	.1017	.9549	.6614	.3679	.0743
617	.2761	.1294	.9826	.8358	.6891	.5423	.3955	.2488	.1020	.9552	.6617	.3682	.0746
426620	33.2764	34.1296	34.9828	35.8361	36.6893	37.5426	38.3958	39.2490	40.1023	40.9555	42.6620	44.3685	46.0750
623	.2766	.1298	.9831	.8363	.6896	.5428	.3961	.2493	.1026	.9558	.6623	.3688	.0753
626	.2768	.1301	.9833	.8366	.6898	.5431	.3963	.2496	.1028	.9561	.6626	.3691	.0756
629	.2771	.1303	.9836	.8368	.6901	.5434	.3966	.2499	.1031	.9564	.6629	.3694	.0759
632	.2773	.1306	.9838	.8371	.6904	.5436	.3969	.2501	.1034	.9567	.6632	.3697	.0763
426635	33.2775	34.1308	34.9841	35.8373	36.6906	37.5439	38.3972	39.2504	40.1037	40.9570	42.6635	44.3700	46.0766
638	.2778	.1310	.9843	.8376	.6909	.5441	.3974	.2507	.1040	.9572	.6638	.3704	.0769
641	.2780	.1313	.9846	.8378	.6911	.5444	.3977	.2510	.1043	.9575	.6641	.3707	.0772
644	.2782	.1315	.9848	.8381	.6914	.5447	.3980	.2512	.1045	.9578	.6644	.3710	.0776
647	.2785	.1318	.9851	.8383	.6916	.5449	.3982	.2515	.1048	.9581	.6647	.3713	.0779
426650	33.2787	34.1320	34.9853	35.8386	36.6919	37.5452	38.3985	39.2518	40.1051	40.9584	42.6650	44.3716	46.0782
653	.2789	.1322	.9855	.8389	.6922	.5455	.3988	.2521	.1054	.9587	.6653	.3719	.0785
656	.2792	.1325	.9858	.8391	.6924	.5457	.3990	.2524	.1057	.9590	.6656	.3722	.0788
659	.2794	.1327	.9860	.8394	.6927	.5460	.3993	.2526	.1059	.9593	.6659	.3725	.0792
662	.2796	.1330	.9863	.8396	.6929	.5463	.3996	.2529	.1062	.9596	.6662	.3728	.0795
426665	33.2799	34.1332	34.9865	35.8399	36.6932	37.5465	38.3999	39.2532	40.1065	40.9598	42.6665	44.3732	46.0798
668	.2801	.1334	.9868	.8401	.6934	.5468	.4001	.2535	.1068	.9601	.6668	.3735	.0801
671	.2803	.1337	.9870	.8404	.6937	.5470	.4004	.2537	.1071	.9604	.6671	.3738	.0805
674	.2806	.1339	.9873	.8406	.6940	.5473	.4007	.2540	.1074	.9607	.6674	.3741	.0808
677	.2808	.1342	.9875	.8409	.6942	.5476	.4009	.2543	.1076	.9610	.6677	.3744	.0811
426680	33.2810	34.1344	34.9878	35.8411	36.6945	37.5478	38.4012	39.2546	40.1079	40.9613	42.6680	44.3747	46.0814
683	.2813	.1346	.9880	.8414	.6947	.5481	.4015	.2548	.1082	.9616	.6683	.3750	.0818
686	.2815	.1349	.9883	.8416	.6950	.5484	.4017	.2551	.1085	.9619	.6686	.3753	.0821
689	.2817	.1351	.9885	.8419	.6953	.5486	.4020	.2554	.1088	.9621	.6689	.3757	.0824
692	.2820	.1354	.9887	.8421	.6955	.5489	.4023	.2557	.1090	.9624	.6692	.3760	.0827
426695	33.2822	34.1356	34.9890	35.8424	36.6958	37.5492	38.4026	39.2559	40.1093	40.9627	42.6695	44.3763	46.0831
698	.2824	.1358	.9892	.8426	.6960	.5494	.4028	.2562	.1096	.9630	.6698	.3766	.0834
701	.2827	.1361	.9895	.8429	.6963	.5497	.4031	.2565	.1099	.9633	.6701	.3769	.0837
704	.2829	.1363	.9897	.8431	.6965	.5500	.4034	.2568	.1102	.9636	.6704	.3772	.0840
707	.2831	1366	.9900	.8434	.6968	.5502	.4036	.2570	.1105	.9639	.6707	.3775	.0844
426710	33.2834	34.1368	34 9902	35.8436	36.6971	37.5505	38.4039	39.2573	40.1107	40.9642	42.6710	44.3778	46.0847
713	.2836	.1370	9905	.8439	.6973	.5507	.4042	.2576	.1110	.9644	.6713	.3782	.0850
716	.2838	.1373	.9907	.8441	.6976	.5510	.4044	.2579	.1113	.9647	.6716	.3785	.0853
719	.2841	.1375	.9910	.8444	.6978	.5513	.4047	.2581	.1116	.9650	.6719	.3788	.0857
722	.2843	.1378	.9912	.8446	.6981	.5515	.4050	.2584	.1119	.9653	.6722	.3791	.0860
426725	33.2846	34.1380	34.9915	35.8449	36.6984	37.5518	38.4053	39.2587	40.1122	40.9656	42.6725	44.3794	46.0863
728	.2848	.1382	.9917	.8452	.6986	.5521	.4055	.2590	.1124	.9659	.6728	.3797	.0866
731	.2850	.1385	.9912	.8454	.6989	.5523	.4058	.2593	.1127	.9662	.6731	.3800	.0869
734	.2853	.1387	.9922	.8457	.6991	.5526	.4061	.2595	.1130	.9665	.6734	.3803	.0873
737	.2855	.1390	.9924	.8459	.6994	.5529	.4063	.2598	.1133	.9668	.6737	.3806	.0876
426740	33.2857	34.1392	34.9927	35.8462	36.6996	37.5531	38.4066	39.2601	40.1136	40.9670	42.6740	44.3810	46.0879
743	.2860	.1394	.9929	.8464	.6999	.5534	.4069	.2604	.1138	.9673	.6743	.3813	.0882
746	.2862	.1397	.9932	.8467	.7002	.5536	.4071	.2606	.1141	.9676	.6746	.3816	.0886
749	.2864	.1399	.9934	.8469	.7004	.5539	.4074	.2609	.1144	.9679	.6749	.3819	.0889
752	.2867	.1402	.9937	.8472	.7007	.5542	.4077	.2612	.1147	.9682	.6752	.3822	.0892
426755	33.2869	34.1404	34.9939	35.8474	36.7009	37.5544	38.4080	39.2615	40.1150	40.9685	42.6755	44.3825	46.0895
758	.2871	.1406	.9942	.8477	.7012	.5547	.4082	.2617	.1153	.9688	.6758	.3828	.0899
761	.2874	.1409	.9944	.8479	.7014	.5550	.4085	.2620	.1155	.9691	.6761	.3831	.0902
764	.2876	.1411	.9946	.8482	.7017	.5552	.4088	.2623	.1158	.9693	.6764	.3835	.0905
767	.2878	.1414	.9949	.8484	.7020	.5555	.4090	.2626	.1161	.9696	.6767	.3838	.0908
426770	33.2881	34.1416	34.9951	35.8487	36.7022	37.5558	38.4093	39.2628	40.1164	40.9699	42.6770	44.3841	46.0912
773	.2883	.1418	.9954	.8489	.7025	.5560	.4096	.2631	.1167	.9702	.6773	.3844	.0915
776	.2885	.1421	.9956	.8492	.7027	.5563	.4098	.2634	.1169	.9705	.6776	.3847	.0918
779	.2888	.1423	.9959	.8494	.7030	.5566	.4101	.2637	.1172	.9708	.6779	.3850	.0921
782	.2890	.1426	.9961	.8497	.7033	.5568	.4104	.2639	.1175	.9711	.6782	.3853	.0925
426785	33.2892	34.1428	34.9964	35.8499	36.7035	37.5571	38.4107	39.2642	40.1178	40.9714	42.6785	44.3856	46.0928
788	.2895	.1430	.9966	.8502	.7038	.5573	.4109	.2645	.1181	.9716	.6788	.3860	.0931
791	.2897	.1433	.9969	.8504	.7040	.5576	.4112	.2648	.1184	.9719	.6791	.3863	.0934
794	.2899	.1435	.9971	.8507	.7043	.5579	.4115	.2650	.1186	.9722	.6794	.3866	.0938
797	.2902	.1438	.9974	.8509	.7045	.5581	.4117	.2653	.1189	.9725	.6797	.3869	.0941
853600	33.2904	34.1440	34.9976	35.8512	36.7048	37.5584	38.4120	39.2656	40.1192	40.9728	42.6800	44.3872	46.0944

H A R M O N I C S

BASIC FREQ.	52	54	56	58	60	62	64	66	68	70	72	74	76
426800	22.1936	23.0472	23.9008	24.7544	25.6080	26.4616	27.3152	28.1688	29.0224	29.8760	30.7296	31.5832	32.4368
803	.1938	.0474	.9010	.7546	.6082	.4618	.3154	.1690	.0226	.8762	.7298	.5834	.4370
806	.1939	.0475	.9011	.7547	.6084	.4620	.3156	.1692	.0228	.8764	.7300	.5836	.4373
809	.1941	.0477	.9013	.7549	.6085	.4622	.3158	.1694	.0230	.8766	.7302	.5839	.4375
812	.1942	.0478	.9015	.7551	.6087	.4623	.3160	.1696	.0232	.8768	.7305	.5841	.4377
426815	22.1944	23.0480	23.9016	24.7553	25.6089	26.4625	27.3162	28.1698	29.0234	29.8771	30.7307	31.5843	32.4379
818	.1945	.0482	.9018	.7554	.6091	.4627	.3164	.1700	.0236	.8773	.7309	.5845	.4382
821	.1947	.0483	.9020	.7556	.6093	.4629	.3165	.1702	.0238	.8775	.7311	.5848	.4384
824	.1948	.0485	.9021	.7558	.6094	.4631	.3167	.1704	.0240	.8777	.7313	.5850	.4386
827	.1950	.0487	.9023	.7560	.6096	.4633	.3169	.1706	.0242	.8779	.7315	.5852	.4389
426830	22.1952	23.0488	23.9025	24.7561	25.6098	26.4635	27.3171	28.1708	29.0244	29.8781	30.7318	31.5854	32.4391
833	.1953	.0490	.9026	.7563	.6100	.4636	.3173	.1710	.0246	.8783	.7320	.5856	.4393
836	.1955	.0491	.9028	.7565	.6102	.4638	.3175	.1712	.0248	.8785	.7322	.5859	.4395
839	.1956	.0493	.9030	.7567	.6103	.4640	.3177	.1714	.0251	.8787	.7324	.5861	.4398
842	.1958	.0495	.9032	.7568	.6105	.4642	.3179	.1716	.0253	.8789	.7326	.5863	.4400
426845	22.1959	23.0496	23.9033	24.7570	25.6107	26.4644	27.3181	28.1718	29.0255	29.8792	30.7328	31.5865	32.4402
848	.1961	.0498	.9035	.7572	.6109	.4646	.3183	.1720	.0257	.8794	.7331	.5868	.4404
851	.1963	.0500	.9037	.7574	.6111	.4648	.3185	.1722	.0259	.8796	.7333	.5870	.4407
854	.1964	.0501	.9038	.7575	.6112	.4649	.3187	.1724	.0261	.8798	.7335	.5872	.4409
857	.1966	.0503	.9040	.7577	.6114	.4651	.3188	.1726	.0263	.8800	.7337	.5874	.4411
426860	22.1967	23.0504	23.9042	24.7579	25.6116	26.4653	27.3190	28.1728	29.0265	29.8802	30.7339	31.5876	32.4414
863	.1969	.0506	.9043	.7581	.6118	.4655	.3192	.1730	.0267	.8804	.7341	.5879	.4416
866	.1970	.0508	.9045	.7582	.6120	.4657	.3194	.1732	.0269	.8806	.7344	.5881	.4418
869	.1972	.0509	.9047	.7584	.6121	.4659	.3196	.1734	.0271	.8808	.7346	.5883	.4420
872	.1973	.0511	.9048	.7586	.6123	.4661	.3198	.1736	.0273	.8810	.7348	.5885	.4423
426875	22.1975	23.0513	23.9050	24.7588	25.6125	26.4663	27.3200	28.1738	29.0275	29.8813	30.7350	31.5888	32.4425
878	.1977	.0514	.9052	.7589	.6127	.4664	.3202	.1739	.0277	.8815	.7352	.5890	.4427
881	.1978	.0516	.9053	.7591	.6129	.4666	.3204	.1741	.0279	.8817	.7354	.5892	.4430
884	.1980	.0517	.9055	.7593	.6130	.4668	.3206	.1743	.0281	.8819	.7356	.5894	.4432
887	.1981	.0519	.9057	.7594	.6132	.4670	.3208	.1745	.0283	.8821	.7359	.5896	.4434
426890	22.1983	23.0521	23.9058	24.7596	25.6134	26.4672	27.3210	28.1747	29.0285	29.8823	30.7361	31.5899	32.4436
893	.1984	.0522	.9060	.7598	.6136	.4674	.3212	.1749	.0287	.8825	.7363	.5901	.4439
896	.1986	.0524	.9062	.7600	.6138	.4676	.3213	.1751	.0289	.8827	.7365	.5903	.4441
899	.1987	.0525	.9063	.7601	.6139	.4677	.3215	.1753	.0291	.8829	.7367	.5905	.4443
902	.1989	.0527	.9065	.7603	.6141	.4679	.3217	.1755	.0293	.8831	.7369	.5907	.4446
426905	22.1991	23.0529	23.9067	24.7605	25.6143	26.4681	27.3219	28.1757	29.0295	29.8834	30.7372	31.5910	32.4448
908	.1992	.0530	.9068	.7607	.6145	.4683	.3221	.1759	.0297	.8836	.7374	.5912	.4450
911	.1994	.0532	.9070	.7608	.6147	.4685	.3223	.1761	.0299	.8838	.7376	.5914	.4452
914	.1995	.0534	.9072	.7610	.6148	.4687	.3225	.1763	.0302	.8840	.7378	.5916	.4455
917	.1997	.0535	.9074	.7612	.6150	.4689	.3227	.1765	.0304	.8842	.7380	.5919	.4457
426920	22.1998	23.0537	23.9075	24.7614	25.6152	26.4690	27.3229	28.1767	29.0306	29.8844	30.7382	31.5921	32.4459
923	.2000	.0538	.9077	.7615	.6154	.4692	.3231	.1769	.0308	.8846	.7385	.5923	.4461
926	.2002	.0540	.9079	.7617	.6156	.4694	.3233	.1771	.0310	.8848	.7387	.5925	.4464
929	.2003	.0542	.9080	.7619	.6157	.4696	.3235	.1773	.0312	.8850	.7389	.5927	.4466
932	.2005	.0543	.9082	.7621	.6159	.4698	.3236	.1775	.0314	.8852	.7391	.5930	.4468
426935	22.2006	23.0545	23.9084	24.7622	25.6161	26.4700	27.3238	28.1777	29.0316	29.8855	30.7393	31.5932	32.4471
938	.2008	.0547	.9085	.7624	.6163	.4702	.3240	.1779	.0318	.8857	.7395	.5934	.4473
941	.2009	.0548	.9087	.7626	.6165	.4703	.3242	.1781	.0320	.8859	.7398	.5936	.4475
944	.2011	.0550	.9089	.7628	.6166	.4705	.3244	.1783	.0322	.8861	.7400	.5939	.4477
947	.2012	.0551	.9090	.7629	.6168	.4707	.3246	.1785	.0324	.8863	.7402	.5941	.4480
426950	22.2014	23.0553	23.9092	24.7631	25.6170	26.4709	27.3248	28.1787	29.0326	29.8865	30.7404	31.5943	32.4482
953	.2016	.0555	.9094	.7633	.6172	.4711	.3250	.1789	.0328	.8867	.7406	.5945	.4484
956	.2017	.0556	.9095	.7634	.6174	.4713	.3252	.1791	.0330	.8869	.7408	.5947	.4487
959	.2019	.0558	.9097	.7636	.6175	.4715	.3254	.1793	.0332	.8871	.7410	.5950	.4489
962	.2020	.0559	.9099	.7638	.6177	.4716	.3256	.1795	.0334	.8873	.7413	.5952	.4491
426965	22.2022	23.0561	23.9100	24.7640	25.6179	26.4718	27.3258	28.1797	29.0336	29.8876	30.7415	31.5954	32.4493
968	.2023	.0563	.9102	.7641	.6181	.4720	.3260	.1799	.0338	.8878	.7417	.5956	.4496
971	.2025	.0564	.9104	.7643	.6183	.4722	.3261	.1801	.0340	.8880	.7419	.5959	.4498
974	.2026	.0566	.9105	.7645	.6184	.4724	.3263	.1803	.0342	.8882	.7421	.5961	.4500
977	.2028	.0568	.9107	.7647	.6186	.4726	.3265	.1805	.0344	.8884	.7423	.5963	.4503
426980	22.2030	23.0569	23.9109	24.7648	25.6188	26.4728	27.3267	28.1807	29.0346	29.8886	30.7426	31.5965	32.4505
983	.2031	.0571	.9110	.7650	.6190	.4729	.3269	.1809	.0348	.8888	.7428	.5967	.4507
986	.2033	.0572	.9112	.7652	.6192	.4731	.3271	.1811	.0350	.8890	.7430	.5970	.4509
989	.2034	.0574	.9114	.7654	.6193	.4733	.3273	.1813	.0353	.8892	.7432	.5972	.4512
992	.2036	.0576	.9116	.7655	.6195	.4735	.3275	.1815	.0355	.8894	.7434	.5974	.4514
426995	22.2037	23.0577	23.9117	24.7657	25.6197	26.4737	27.3277	28.1817	29.0357	29.8897	30.7436	31.5976	32.4516
998	.2039	.0579	.9119	.7659	.6199	.4739	.3279	.1819	.0359	.8899	.7439	.5979	.4518
427001	.2041	.0581	.9121	.7661	.6201	.4741	.3281	.1821	.0361	.8901	.7441	.5981	.4521
004	.2042	.0582	.9122	.7662	.6202	.4742	.3283	.1823	.0363	.8903	.7443	.5983	.4523
007	.2044	.0584	.9124	.7664	.6204	.4744	.3284	.1825	.0365	.8905	.7445	.5985	.4525
427010	22.2045	23.0585	23.9126	24.7666	25.6206	26.4746	27.3286	28.1827	29.0367	29.8907	30.7447	31.5987	32.4528
013	.2047	.0587	.9127	.7668	.6208	.4748	.3288	.1829	.0369	.8909	.7449	.5990	.4530
016	.2048	.0589	.9129	.7669	.6210	.4750	.3290	.1831	.0371	.8911	.7452	.5992	.4532
019	.2050	.0590	.9131	.7671	.6211	.4752	.3292	.1833	.0373	.8913	.7454	.5994	.4534
022	.2051	.0592	.9132	.7673	.6213	.4754	.3294	.1835	.0375	.8915	.7456	.5996	.4537
427025	22.2053	23.0594	23.9134	24.7675	25.6215	26.4756	27.3296	28.1837	29.0377	29.8918	30.7458	31.5999	32.4539
028	.2055	.0595	.9136	.7676	.6217	.4757	.3298	.1838	.0379	.8920	.7460	.6001	.4541
031	.2056	.0597	.9137	.7678	.6219	.4759	.3300	.1840	.0381	.8922	.7462	.6003	.4544
034	.2058	.0598	.9139	.7680	.6220	.4761	.3302	.1842	.0383	.8924	.7464	.6005	.4546
037	.2059	.0600	.9141	.7681	.6222	.4763	.3304	.1844	.0385	.8926	.7467	.6007	.4548
427040	22.2061	23.0602	23.9142	24.7683	25.6224	26.4765	27.3306	28.1846	29.0387	29.8928	30.7469	31.6010	32.4550
043	.2062	.0603	.9144	.7685	.6226	.4767	.3308	.1848	.0389	.8930	.7471	.6012	.4553
046	.2064	.0605	.9146	.7687	.6228	.4769	.3309	.1850	.0391	.8932	.7473	.6014	.4555
049	.2065	.0606	.9147	.7688	.6229	.4770	.3311	.1852	.0393	.8934	.7475	.6016	.4557
052	.2067	.0608	.9149	.7690	.6231	.4772	.3313	.1854	.0395	.8936	.7477	.6018	.4560
427055	22.2069	23.0610	23.9151	24.7692	25.6233	26.4774	27.3315	28.1856	29.0397	29.8939	30.7480	31.6021	32.4562
058	.2070	.0611	.9152	.7694	.6235	.4776	.3317	.1858	.0399	.8941	.7482	.6023	.4564
061	.2072	.0613	.9154	.7695	.6237	.4778	.3319	.1860	.0401	.8943	.7484	.6025	.4566
064	.2073	.0615	.9156	.7697	.6238	.4780	.3321	.1862	.0404	.8945	.7486	.6027	.4569
067	.2075	.0616	.9158	.7699	.6240	.4782	.3323	.1864	.0406	.8947	.7488	.6030	.4571
427070	22.2076	23.0618	23.9159	24.7701	25.6242	26.4783	27.3325	28.1866	29.0408	29.8949	30.7490	31.6032	32.4573
073	.2078	.0619	.9161	.7702	.6244	.4785	.3327	.1868	.0410	.8951	.7493	.6034	.4575
076	.2080	.0621	.9163	.7704	.6246	.4787	.3329	.1870	.0412	.8953	.7495	.6036	.4578
079	.2081	.0623	.9164	.7706	.6247	.4789	.3331	.1872	.0414	.8955	.7497	.6038	.4580
082	.2083	.0624	.9166	.7708	.6249	.4791	.3332	.1874	.0416	.8957	.7499	.6041	.4582
427085	22.2084	23.0626	23.9168	24.7709	25.6251	26.4793	27.3334	28.1876	29.0418	29.8960	30.7501	31.6043	32.4585
088	.2086	.0628	.9169	.7711	.6253	.4795	.3336	.1878	.0420	.8962	.7503	.6045	.4587
091	.2087	.0629	.9171	.7713	.6255	.4796	.3338	.1880	.0422	.8964	.7506	.6047	.4589
094	.2089	.0631	.9173	.7715	.6256	.4798	.3340	.1882	.0424	.8966	.7508	.6050	.4591
097	.2090	.0632	.9174	.7716	.6258	.4800	.3342	.1884	.0426	.8968	.7510	.6052	.4594
427100	22.2092	23.0634	23.9176	24.7718	25.6260	26.4802	27.3344	28.1886	29.0428	29.8970	30.7512	31.6054	32.4596

MEGACYCLES PER SECOND

BASIC	HARMONICS												
FREQ.	78	80	82	84	86	88	90	92	94	96	100	104	108
426800	33.2904	34.1440	34.9976	35.8512	36.7048	37.5584	38.4120	39.2656	40.1192	40.9728	42.6800	44.3872	46.0944
803	.2906	.1442	.9978	.8515	.7051	.5587	.4123	.2659	.1195	.9731	.6803	.3875	.0947
806	.2909	.1445	.9981	.8517	.7053	.5589	.4125	.2662	.1198	.9734	.6806	.3878	.0950
809	.2911	.1447	.9983	.8520	.7056	.5592	.4128	.2664	.1200	.9737	.6809	.3881	.0954
812	.2913	.1450	.9986	.8522	.7058	.5595	.4131	.2667	.1203	.9740	.6812	.3884	.0957
426815	33.2916	34.1452	34.9988	35.8525	36.7061	37.5597	38.4134	39.2670	40.1206	40.9742	42.6815	44.3888	46.0960
818	.2918	.1454	.9991	.8527	.7063	.5600	.4136	.2673	.1209	.9745	.6818	.3891	.0963
821	.2920	.1457	.9993	.8530	.7066	.5602	.4139	.2675	.1212	.9748	.6821	.3894	.0967
824	.2923	.1459	.9996	.8532	.7069	.5605	.4142	.2678	.1215	.9751	.6824	.3897	.0970
827	.2925	.1462	.9998	.8535	.7071	.5608	.4144	.2681	.1217	.9754	.6827	.3900	.0973
426830	33.2927	34.1464	35.0001	35.8537	36.7074	37.5610	38.4147	39.2684	40.1220	40.9757	42.6830	44.3903	46.0976
833	.2930	.1466	.0003	.8540	.7076	.5613	.4150	.2686	.1223	.9760	.6833	.3906	.0980
836	.2932	.1469	.0006	.8542	.7079	.5616	.4152	.2689	.1226	.9763	.6836	.3909	.0983
839	.2934	.1471	.0008	.8545	.7082	.5618	.4155	.2692	.1229	.9765	.6839	.3913	.0986
842	.2937	.1474	.0010	.8547	.7084	.5621	.4158	.2695	.1231	.9768	.6842	.3916	.0989
426845	33.2939	34.1476	35.0013	35.8550	36.7087	37.5624	38.4161	39.2697	40.1234	40.9771	42.6845	44.3919	46.0993
848	.2941	.1478	.0015	.8552	.7089	.5626	.4163	.2700	.1237	.9774	.6848	.3922	.0996
851	.2944	.1481	.0018	.8555	.7092	.5629	.4166	.2703	.1240	.9777	.6851	.3925	.0999
854	.2946	.1483	.0020	.8557	.7094	.5632	.4169	.2706	.1243	.9780	.6854	.3928	.1002
857	.2948	.1486	.0023	.8560	.7097	.5634	.4171	.2708	.1246	.9783	.6857	.3931	.1006
426860	33.2951	34.1488	35.0025	35.8562	36.7100	37.5637	38.4174	39.2711	40.1248	40.9786	42.6860	44.3934	46.1009
863	.2953	.1490	.0028	.8565	.7102	.5639	.4177	.2714	.1251	.9788	.6863	.3938	.1012
866	.2955	.1493	.0030	.8567	.7105	.5642	.4179	.2717	.1254	.9791	.6866	.3941	.1015
869	.2958	.1495	.0033	.8570	.7107	.5645	.4182	.2719	.1257	.9794	.6869	.3944	.1019
872	.2960	.1498	.0035	.8572	.7110	.5647	.4185	.2722	.1260	.9797	.6872	.3947	.1022
426875	33.2963	34.1500	35.0038	35.8575	36.7113	37.5650	38.4188	39.2725	40.1263	40.9800	42.6875	44.3950	46.1025
878	.2965	.1502	.0040	.8578	.7115	.5653	.4190	.2728	.1265	.9803	.6878	.3953	.1028
881	.2967	.1505	.0042	.8580	.7118	.5655	.4193	.2731	.1268	.9806	.6881	.3956	.1031
884	.2970	.1507	.0045	.8583	.7120	.5658	.4196	.2733	.1271	.9809	.6884	.3959	.1035
887	.2972	.1510	.0047	.8585	.7123	.5661	.4198	.2736	.1274	.9812	.6887	.3962	.1038
426890	33.2974	34.1512	35.0050	35.8588	36.7125	37.5663	38.4201	39.2739	40.1277	40.9814	42.6890	44.3966	46.1041
893	.2977	.1514	.0052	.8590	.7128	.5666	.4204	.2742	.1279	.9817	.6893	.3969	.1044
896	.2979	.1517	.0055	.8593	.7131	.5668	.4206	.2744	.1282	.9820	.6896	.3972	.1048
899	.2981	.1519	.0057	.8595	.7133	.5671	.4209	.2747	.1285	.9823	.6899	.3975	.1051
902	.2984	.1522	.0060	.8598	.7136	.5674	.4212	.2750	.1288	.9826	.6902	.3978	.1054
426905	33.2986	34.1524	35.0062	35.8600	36.7138	37.5676	38.4215	39.2753	30.1291	40.9829	42.6905	44.3981	46.1057
908	.2988	.1526	.0065	.8603	.7141	.5679	.4217	.2755	.1294	.9832	.6908	.3984	.1061
911	.2991	.1529	.0067	.8605	.7143	.5682	.4220	.2758	.1296	.9835	.6911	.3987	.1064
914	.2993	.1531	.0069	.8608	.7146	.5684	.4223	.2761	.1299	.9837	.6914	.3991	.1067
917	.2995	.1534	.0072	.8610	.7149	.5687	.4225	.2764	.1302	.9840	.6917	.3994	.1070
426920	33.2998	34.1536	35.0074	35.8613	36.7151	37.5690	38.4228	39.2766	40.1305	40.9843	42.6920	44.3997	46.1074
923	.3000	.1538	.0077	.8615	.7154	.5692	.4231	.2769	.1308	.9846	.6923	.4000	.1077
926	.3002	.1541	.0079	.8618	.7156	.5695	.4233	.2772	.1310	.9849	.6926	.4003	.1080
929	.3005	.1543	.0082	.8620	.7159	.5698	.4236	.2775	.1313	.9852	.6929	.4006	.1083
932	.3007	.1546	.0084	.8623	.7162	.5700	.4239	.2777	.1316	.9855	.6932	.4009	.1087
426935	33.3009	34.1548	35.0087	35.8625	36.7164	37.5703	38.4242	39.2780	40.1319	40.9858	42.6935	44.4012	46.1090
938	.3012	.1550	.0089	.8628	.7167	.5705	.4244	.2783	.1322	.9860	.6938	.4016	.1093
941	.3014	.1553	.0092	.8630	.7169	.5708	.4247	.2786	.1325	.9863	.6941	.4019	.1096
944	.3016	.1555	.0094	.8633	.7172	.5711	.4250	.2788	.1327	.9866	.6944	.4022	.1100
947	.3019	.1558	.0097	.8635	.7174	.5713	.4252	.2791	.1330	.9869	.6947	.4025	.1103
426950	33.3021	34.1560	35.0099	35.8638	36.7177	37.5716	38.4255	39.2794	40.1333	40.9872	42.6950	44.4028	46.1106
953	.3023	.1562	.0101	.8641	.7180	.5719	.4258	.2797	.1336	.9875	.6953	.4031	.1109
956	.3026	.1565	.0104	.8643	.7182	.5721	.4260	.2800	.1339	.9878	.6956	.4034	.1112
959	.3028	.1567	.0106	.8646	.7185	.5724	.4263	.2802	.1341	.9881	.6959	.4037	.1116
962	.3030	.1570	.0109	.8648	.7187	.5727	.4266	.2805	.1344	.9884	.6962	.4040	.1119
426965	33.3033	34.1572	35.0111	35.8651	36.7190	37.5729	38.4269	39.2808	40.1347	40.9886	42.6965	44.4044	46.1122
968	.3035	.1574	.0114	.8653	.7192	.5732	.4271	.2811	.1350	.9889	.6968	.4047	.1125
971	.3037	.1577	.0116	.8656	.7195	.5734	.4274	.2813	.1353	.9892	.6971	.4050	.1129
974	.3040	.1579	.0119	.8658	.7198	.5737	.4277	.2816	.1356	.9895	.6974	.4053	.1132
977	.3042	.1582	.0121	.8661	.7200	.5740	.4279	.2819	.1358	.9898	.6977	.4056	.1135
426980	33.3044	34.1584	35.0124	35.8663	36.7203	37.5742	38.4282	39.2822	40.1361	40.9901	42.6980	44.4059	46.1138
983	.3047	.1586	.0126	.8666	.7205	.5745	.4285	.2824	.1364	.9904	.6983	.4062	.1142
986	.3049	.1589	.0129	.8668	.7208	.5748	.4287	.2827	.1367	.9907	.6986	.4065	.1145
989	.3051	.1591	.0131	.8671	.7211	.5750	.4290	.2830	.1370	.9909	.6989	.4069	:1148
992	.3054	.1594	.0133	.8673	.7213	.5753	.4293	.2833	.1372	.9912	.6992	.4072	.1151
426995	33.3056	34.1596	35.0136	35.8676	36.7216	37.5756	38.4296	39.2835	40.1375	40.9915	42.6995	44.4075	46.1155
998	.3058	.1598	.0138	.8678	.7218	.5758	.4298	.2838	.1378	.9918	.6998	.4078	.1158
427001	.3061	.1601	.0141	.8681	.7221	.5761	.4301	.2841	.1381	.9921	.7001	.4081	.1161
004	.3063	.1603	.0143	.8683	.7223	.5764	.4304	.2844	.1384	.9924	.7004	.4084	.1164
007	.3065	.1606	.0146	.8686	.7226	:5766	.4306	.2846	.1387	.9927	.7007	.4087	.1168
427010	33.3068	34.1608	35.0148	35.8688	36.7229	37.5769	38.4309	39.2849	40.1389	40.9930	42.7010	44.4090	46.1171
013	.3070	.1610	.0151	.8691	.7231	.5771	.4312	.2852	.1392	.9932	.7013	.4094	.1174
016	.3072	.1613	.0153	.8693	.7234	.5774	.4314	.2855	.1395	.9935	.7016	.4097	.1177
019	.3075	.1615	.0156	.8696	.7236	.5777	.4317	.2857	.1398	.9938	.7019	.4100	.1181
022	.3077	.1618	.0158	.8698	.7239	.5779	.4320	.2860	.1401	.9941	.7022	.4103	.1184
427025	33.3080	34.1620	35.0161	35.8701	36.7242	37.5782	38.4323	39.2863	40.1404	40.9944	42.7025	44.4106	46.1187
028	.3082	.1622	.0163	.8704	.7244	.5785	.4325	.2866	.1406	.9947	.7028	.4109	.1190
031	.3084	.1625	.0165	.8706	.7247	.5787	.4328	.2869	.1409	.9950	.7031	.4112	.1193
034	.3087	.1627	.0168	.8709	.7249	.5790	.4331	.2871	.1412	.9953	.7034	.4115	.1197
037	.3089	.1630	.0170	.8711	.7252	.5793	.4333	.2874	.1415	.9956	.7037	.4118	.1200
427040	33.3091	34.1632	35.0173	35.8714	36.7254	37.5795	38.4336	39.2877	40.1418	40.9958	42.7040	44.4122	46.1203
043	.3094	.1634	.0175	.8716	.7257	.5798	.4339	.2880	.1420	.9961	.7043	.4125	.1206
046	.3096	.1637	.0178	.8719	.7260	.5800	.4341	.2882	.1423	.9964	.7046	.4128	.1210
049	.3098	.1639	.0180	.8721	.7262	.5803	.4344	.2885	.1426	.9967	.7049	.4131	.1213
052	.3101	.1642	.0183	.8724	.7265	.5806	.4347	.2888	.1429	.9970	.7052	.4134	.1216
427055	33.3103	34.1644	35.0185	35.8726	36.7267	37.5808	38.4350	39.2891	40.1432	40.9973	42.7055	44.4137	46.1219
058	.3105	.1646	.0188	.8729	.7270	.5811	.4352	.2893	.1435	.9976	.7058	.4140	.1223
061	.3108	.1649	.0190	.8731	.7272	.5814	.4355	.2896	.1437	.9979	.7061	.4143	.1226
064	.3110	.1651	.0192	.8734	.7274	.5816	.4358	.2899	.1440	.9981	.7064	.4147	.1229
067	.3112	.1654	.0195	.8736	.7278	.5819	.4360	.2902	.1443	.9984	.7067	.4150	.1232
427070	33.3115	34.1656	35.0197	35.8739	36.7280	37.5822	38.4363	39.2904	40.1446	40.9987	42.7070	44.4153	46.1236
073	.3117	.1658	.0200	.8741	.7283	.5824	.4366	.2907	.1449	.9990	.7073	.4156	.1239
076	.3119	.1661	.0202	.8744	.7285	.5827	.4368	.2910	.1451	.9993	.7076	.4159	.1242
079	.3122	.1663	.0205	.8746	.7288	.5830	.4371	.2913	.1454	.9996	.7079	.4162	.1245
082	.3124	.1666	.0207	.8749	.7291	.5832	.4374	.2915	.1457	.9999	.7082	.4165	.1249
427085	33.3126	34.1668	35.0210	35.8751	36.7293	37.5835	38.4377	39.2918	40.1460	41.0002	42.7085	44.4168	46.1252
088	.3129	.1670	.0212	.8754	.7296	.5837	.4379	.2921	.1463	.0004	.7088	.4172	.1255
091	.3131	.1673	.0215	.8756	.7298	.5840	.4382	.2924	.1466	.0007	.7091	.4175	.1258
094	.3133	.1675	.0217	.8759	.7301	.5843	.4385	.2926	.1468	.0010	.7094	.4178	.1262
097	.3136	.1678	.0220	.8761	.7303	.5845	.4387	.2929	.1471	.0013	.7097	.4181	.1265
427100	33.3138	34.1680	35.0222	35.8764	36.7306	37.5848	38.4390	39.2932	40.1474	41.0016	42.7100	44.4184	46.1268

MEGACYCLES PER SECOND

H A R M O N I C S

BASIC FREQ.	52	54	56	58	60	62	64	66	68	70	72	74	76
427100	22.2092	23.0634	23.9176	24.7718	25.6260	26.4802	27.3344	28.1886	29.0428	29.8970	30.7512	31.6054	32.4596
103	.2094	.0636	.9178	.7720	.6262	.4804	.3346	.1888	.0430	.8972	.7514	.6056	.4598
106	.2095	.0637	.9179	.7721	.6264	.4806	.3348	.1890	.0432	.8974	.7516	.6058	.4601
109	.2097	.0639	.9181	.7723	.6265	.4808	.3350	.1892	.0434	.8976	.7518	.6061	.4603
112	.2098	.0640	.9183	.7725	.6267	.4809	.3352	.1894	.0436	.8978	.7521	.6063	.4605
427115	22.2100	23.0642	23.9184	24.7727	25.6269	26.4811	27.3354	28.1896	29.0438	29.8981	30.7523	31.6065	32.4607
118	.2101	.0644	.9186	.7728	.6271	.4813	.3356	.1898	.0440	.8983	.7525	.6067	.4610
121	.2103	.0645	.9188	.7730	.6273	.4815	.3357	.1900	.0442	.8985	.7527	.6070	.4612
124	.2104	.0647	.9189	.7732	.6274	.4817	.3359	.1902	.0444	.8987	.7529	.6072	.4614
127	.2106	.0649	.9191	.7734	.6276	.4819	.3361	.1904	.0446	.8989	.7531	.6074	.4617
427130	22.2108	23.0650	23.9193	24.7735	25.6278	26.4821	27.3363	28.1906	29.0448	29.8991	30.7534	31.6076	32.4619
133	.2109	.0652	.9194	.7737	.6280	.4822	.3365	.1908	.0450	.8993	.7536	.6078	.4621
136	.2111	.0653	.9196	.7739	.6282	.4824	.3367	.1910	.0452	.8995	.7538	.6081	.4623
139	.2112	.0655	.9198	.7741	.6283	.4826	.3369	.1912	.0455	.8997	.7540	.6083	.4626
142	.2114	.0657	.9200	.7742	.6285	.4828	.3371	.1914	.0457	.8999	.7542	.6085	.4628
427145	22.2115	23.0658	23.9201	24.7744	25.6287	26.4830	27.3373	28.1916	29.0459	29.9002	30.7544	31.6087	32.4630
148	.2117	.0660	.9203	.7746	.6289	.4832	.3375	.1918	.0461	.9004	.7547	.6090	.4632
151	.2119	.0662	.9205	.7748	.6291	.4834	.3377	.1920	.0463	.9006	.7549	.6092	.4635
154	.2120	.0663	.9206	.7749	.6292	.4835	.3379	.1922	.0465	.9008	.7551	.6094	.4637
157	.2122	.0665	.9208	.7751	.6294	.4837	.3380	.1924	.0467	.9010	.7553	.6096	.4639
427160	22.2123	23.0666	23.9210	24.7753	25.6296	26.4839	27.3382	28.1926	29.0469	29.9012	30.7555	31.6098	32.4642
163	.2125	.0668	.9211	.7755	.6298	.4841	.3384	.1928	.0471	.9014	.7557	.6101	.4644
166	.2126	.0670	.9213	.7756	.6300	.4843	.3386	.1930	.0473	.9016	.7560	.6103	.4646
169	.2128	.0671	.9215	.7758	.6301	.4845	.3388	.1932	.0475	.9018	.7562	.6105	.4648
172	.2129	.0673	.9216	.7760	.6303	.4847	.3390	.1934	.0477	.9020	.7564	.6107	.4651
427175	22.2131	23.0675	23.9218	24.7762	25.6305	26.4849	27.3392	28.1936	29.0479	29.9023	30.7566	31.6110	32.4653
178	.2133	.0676	.9220	.7763	.6307	.4850	.3394	.1937	.0481	.9025	.7568	.6112	.4655
181	.2134	.0678	.9221	.7765	.6309	.4852	.3396	.1939	.0483	.9027	.7570	.6114	.4658
184	.2136	.0679	.9223	.7767	.6310	.4854	.3398	.1941	.0485	.9029	.7572	.6116	.4660
187	.2137	.0681	.9225	.7768	.6312	.4856	.3400	.1943	.0487	.9031	.7575	.6118	.4662
427190	22.2139	23.0683	23.9226	24.7770	25.6314	26.4858	27.3402	28.1945	29.0489	29.9033	30.7577	31.6121	32.4664
193	.2140	.0684	.9228	.7772	.6316	.4860	.3404	.1947	.0491	.9035	.7579	.6123	.4667
196	.2142	.0686	.9230	.7774	.6318	.4862	.3405	.1949	.0493	.9037	.7581	.6125	.4669
199	.2143	.0687	.9231	.7775	.6319	.4863	.3407	.1951	.0495	.9039	.7583	.6127	.4671
202	.2145	.0689	.9233	.7777	.6321	.4865	.3409	.1953	.0497	.9041	.7585	.6129	.4674
427205	22.2147	23.0691	23.9235	24.7779	25.6323	26.4867	27.3411	28.1955	29.0499	29.9044	30.7588	31.6132	32.4676
208	.2148	.0692	.9236	.7781	.6325	.4869	.3413	.1957	.0501	.9046	.7590	.6134	.4678
211	.2150	.0694	.9238	.7782	.6327	.4871	.3415	.1959	.0503	.9048	.7592	.6136	.4680
214	.2151	.0696	.9240	.7784	.6328	.4873	.3417	.1961	.0506	.9050	.7594	.6138	.4683
217	.2153	.0697	.9242	.7786	.6330	.4875	.3419	.1963	.0508	.9052	.7596	.6141	.4685
427220	22.2154	23.0699	23.9243	24.7788	25.6332	26.4876	27.3421	28.1965	29.0510	29.9054	30.7598	31.6143	32.4687
223	.2156	.0700	.9245	.7789	.6334	.4878	.3423	.1967	.0512	.9056	.7601	.6145	.4689
226	.2158	.0702	.9247	.7791	.6336	.4880	.3425	.1969	.0514	.9058	.7603	.6147	.4692
229	.2159	.0704	.9248	.7793	.6337	.4882	.3427	.1971	.0516	.9060	.7605	.6149	.4694
232	.2161	.0705	.9250	.7795	.6339	.4884	.3428	.1973	.0518	.9062	.7607	.6152	.4696
427235	22.2162	23.0707	23.9252	24.7796	25.6341	26.4886	27.3430	28.1975	29.0520	29.9065	30.7609	31.6154	32.4699
238	.2164	.0709	.9253	.7798	.6343	.4888	.3432	.1977	.0522	.9067	.7611	.6156	.4701
241	.2165	.0710	.9255	.7800	.6345	.4889	.3434	.1979	.0524	.9069	.7614	.6158	.4703
244	.2167	.0712	.9257	.7802	.6346	.4891	.3436	.1981	.0526	.9071	.7616	.6161	.4705
247	.2168	.0713	.9258	.7803	.6348	.4893	.3438	.1983	.0528	.9073	.7618	.6163	.4708
427250	22.2170	23.0715	23.9260	24.7805	25.6350	26.4895	27.3440	28.1985	29.0530	29.9075	30.7620	31.6165	32.4710
253	.2172	.0717	.9262	.7807	.6352	.4897	.3442	.1987	.0532	.9077	.7622	.6167	.4712
256	.2173	.0718	.9263	.7808	.6354	.4899	.3444	.1989	.0534	.9079	.7624	.6169	.4715
259	.2175	.0720	.9265	.7810	.6355	.4901	.3446	.1991	.0536	.9081	.7626	.6172	.4717
262	.2176	.0721	.9267	.7812	.6357	.4902	.3448	.1993	.0538	.9083	.7629	.6174	.4719
427265	22.2178	23.0723	23.9268	24.7814	25.6359	26.4904	27.3450	28.1995	29.0540	29.9086	30.7631	31.6176	32.4721
268	.2179	.0725	.9270	.7815	.6361	.4906	.3452	.1997	.0542	.9088	.7633	.6178	.4724
271	.2181	.0726	.9272	.7817	.6363	.4908	.3453	.1999	.0544	.9090	.7635	.6181	.4726
274	.2182	.0728	.9273	.7819	.6364	.4910	.3455	.2001	.0546	.9092	.7637	.6183	.4728
277	.2184	.0730	.9275	.7821	.6366	.4912	.3457	.2003	.0548	.9094	.7639	.6185	.4731
427280	22.2186	23.0731	23.9277	24.7822	25.6368	26.4914	27.3459	28.2005	29.0550	29.9096	30.7642	31.6187	32.4733
283	.2187	.0733	.9278	.7824	.6370	.4915	.3461	.2007	.0552	.9098	.7644	.6189	.4735
286	.2189	.0734	.9280	.7826	.6372	.4917	.3463	.2009	.0554	.9100	.7646	.6192	.4737
289	.2190	.0736	.9282	.7828	.6373	.4919	.3465	.2011	.0557	.9102	.7648	.6194	.4740
292	.2192	.0738	.9284	.7829	.6375	.4921	.3467	.2013	.0559	.9104	.7650	.6196	.4742
427295	22.2193	23.0739	23.9285	24.7831	25.6377	26.4923	27.3469	28.2015	29.0561	29.9107	30.7652	31.6198	32.4744
298	.2195	.0741	.9287	.7833	.6379	.4925	.3471	.2017	.0563	.9109	.7655	.6201	.4746
301	.2197	.0743	.9289	.7835	.6381	.4927	.3473	.2019	.0565	.9111	.7657	.6203	.4749
304	.2198	.0744	.9290	.7836	.6382	.4928	.3475	.2021	.0567	.9113	.7659	.6205	.4751
307	.2200	.0746	.9292	.7838	.6384	.4930	.3476	.2023	.0569	.9115	.7661	.6207	.4753
427310	22.2201	23.0747	23.9294	24.7840	25.6386	26.4932	27.3478	28.2025	29.0571	29.9117	30.7663	31.6209	32.4756
313	.2203	.0749	.9295	.7842	.6388	.4934	.3480	.2027	.0573	.9119	.7665	.6212	.4758
316	.2204	.0751	.9297	.7843	.6390	.4936	.3482	.2029	.0575	.9121	.7668	.6214	.4760
319	.2206	.0752	.9299	.7845	.6391	.4938	.3484	.2031	.0577	.9123	.7670	.6216	.4762
322	.2207	.0754	.9300	.7847	.6393	.4940	.3486	.2033	.0579	.9125	.7672	.6218	.4765
427325	22.2209	23.0756	23.9302	24.7849	25.6395	26.4942	27.3488	28.2035	29.0581	29.9128	30.7674	31.6221	32.4767
328	.2211	.0757	.9304	.7850	.6397	.4943	.3490	.2036	.0583	.9130	.7676	.6223	.4769
331	.2212	.0759	.9305	.7852	.6399	.4945	.3492	.2038	.0585	.9132	.7678	.6225	.4772
334	.2214	.0760	.9307	.7854	.6400	.4947	.3494	.2040	.0587	.9134	.7680	.6227	.4774
337	.2215	.0762	.9309	.7855	.6402	.4949	.3496	.2042	.0589	.9136	.7683	.6229	.4776
427340	22.2217	23.0764	23.9310	24.7857	25.6404	26.4951	27.3498	28.2044	29.0591	29.9138	30.7685	31.6232	32.4778
343	.2218	.0765	.9312	.7859	.6406	.4953	.3500	.2046	.0593	.9140	.7687	.6234	.4781
346	.2220	.0767	.9314	.7861	.6408	.4955	.3501	.2048	.0595	.9142	.7689	.6236	.4783
349	.2221	.0768	.9315	.7862	.6409	.4956	.3503	.2050	.0597	.9144	.7691	.6238	.4785
352	.2223	.0770	.9317	.7864	.6411	.4958	.3505	.2052	.0599	.9146	.7693	.6240	.4788
427355	22.2225	23.0772	23.9319	24.7866	25.6413	26.4960	27.3507	28.2054	29.0601	29.9149	30.7696	31.6243	32.4790
358	.2226	.0773	.9320	.7868	.6415	.4962	.3509	.2056	.0603	.9151	.7698	.6245	.4792
361	.2228	.0775	.9322	.7869	.6417	.4964	.3511	.2058	.0605	.9153	.7700	.6247	.4794
364	.2229	.0777	.9324	.7871	.6418	.4966	.3513	.2060	.0608	.9155	.7702	.6249	.4797
367	.2231	.0778	.9326	.7873	.6420	.4968	.3515	.2062	.0610	.9157	.7704	.6252	.4799
427370	22.2232	23.0780	23.9327	24.7875	25.6422	26.4969	27.3517	28.2064	29.0612	29.9159	30.7706	31.6254	32.4801
373	.2234	.0781	.9329	.7876	.6424	.4971	.3519	.2066	.0614	.9161	.7709	.6256	.4803
376	.2236	.0783	.9331	.7878	.6426	.4973	.3521	.2068	.0616	.9163	.7711	.6258	.4806
379	.2237	.0785	.9332	.7880	.6427	.4975	.3523	.2070	.0618	.9165	.7713	.6260	.4808
382	.2239	.0786	.9334	.7882	.6429	.4977	.3524	.2072	.0620	.9167	.7715	.6263	.4810
427385	22.2240	23.0788	23.9336	24.7883	25.6431	26.4979	27.3526	28.2074	29.0622	29.9170	30.7717	31.6265	32.4813
388	.2242	.0790	.9337	.7885	.6433	.4981	.3528	.2076	.0624	.9172	.7719	.6267	.4815
391	.2243	.0791	.9339	.7887	.6435	.4982	.3530	.2078	.0626	.9174	.7722	.6269	.4817
394	.2245	.0793	.9341	.7889	.6436	.4984	.3532	.2080	.0628	.9176	.7724	.6272	.4819
397	.2246	.0794	.9342	.7890	.6438	.4986	.3534	.2082	.0630	.9178	.7726	.6274	.4822
427400	22.2248	23.0796	23.9344	24.7892	25.6440	26.4988	27.3536	28.2084	29.0632	29.9180	30.7728	31.6276	32.4824

MEGACYCLES PER SECOND

H A R M O N I C S

BASIC FREQ.	78	80	82	84	86	88	90	92	94	96	100	104	108
427100	33.3138	34.1680	35.0222	35.8764	36.7306	37.5848	38.4390	39.2932	40.1474	41.0016	42.7100	44.4184	46.1268
103	.3140	.1682	.0224	.8767	.7309	.5851	.4393	.2935	.1477	.0019	.7103	.4187	.1271
106	.3143	.1685	.0227	.8769	.7311	.5853	.4395	.2938	.1480	.0022	.7106	.4190	.1274
109	.3145	.1687	.0229	.8772	.7314	.5856	.4398	.2940	.1482	.0025	.7109	.4193	.1278
112	.3147	.1690	.0232	.8774	.7316	.5859	.4401	.2943	.1485	.0028	.7112	.4196	.1281
427115	33.3150	34.1692	35.0234	35.8777	36.7319	37.5861	38.4404	39.2946	40.1488	41.0030	42.7115	44.4200	46.1284
118	.3152	.1694	.0237	.8779	.7321	.5864	.4406	.2949	.1491	.0033	.7118	.4203	.1287
121	.3154	.1697	.0239	.8782	.7324	.5866	.4409	.2951	.1494	.0036	.7121	.4206	.1291
124	.3157	.1699	.0242	.8784	.7327	.5869	.4412	.2954	.1497	.0039	.7124	.4209	.1294
127	.3159	.1702	.0244	.8787	.7329	.5872	.4414	.2957	.1499	.0042	.7127	.4212	.1297
427130	33.3161	34.1704	35.0247	35.8789	36.7332	37.5874	38.4417	39.2960	40.1502	41.0045	42.7130	44.4215	46.1300
133	.3164	.1706	.0249	.8792	.7334	.5877	.4420	.2962	.1505	.0048	.7133	.4218	.1304
136	.3166	.1709	.0252	.8794	.7337	.5880	.4422	.2965	.1508	.0051	.7136	.4221	.1307
139	.3168	.1711	.0254	.8797	.7340	.5882	.4425	.2968	.1511	.0053	.7139	.4225	.1310
142	.3171	.1714	.0256	.8799	.7342	.5885	.4428	.2971	.1513	.0056	.7142	.4228	.1313
427145	33.3173	34.1716	35.0259	35.8802	36.7345	37.5888	38.4431	39.2973	40.1516	41.0059	42.7145	44.4231	46.1317
148	.3175	.1718	.0261	.8804	.7347	.5890	.4433	.2976	.1519	.0062	.7148	.4234	.1320
151	.3178	.1721	.0264	.8807	.7350	.5893	.4436	.2979	.1522	.0065	.7151	.4237	.1323
154	.3180	.1723	.0266	.8809	.7352	.5896	.4439	.2982	.1525	.0068	.7154	.4240	.1326
157	.3182	.1726	.0269	.8812	.7355	.5898	.4441	.2984	.1528	.0071	.7157	.4243	.1330
427160	33.3185	34.1728	35.0271	35.8814	36.7358	37.5901	38.4444	39.2987	40.1530	41.0074	42.7160	44.4246	46.1333
163	.3187	.1730	.0274	.8817	.7360	.5903	.4447	.2990	.1533	.0076	.7163	.4250	.1336
166	.3189	.1733	.0276	.8819	.7363	.5906	.4449	.2993	.1536	.0079	.7166	.4253	.1339
169	.3192	.1735	.0279	.8822	.7365	.5909	.4452	.2995	.1539	.0082	.7169	.4256	.1343
172	.3194	.1738	.0281	.8824	.7368	.5911	.4455	.2998	.1542	.0085	.7172	.4259	.1346
427175	33.3197	34.1740	35.0284	35.8827	36.7371	37.5914	38.4458	39.3001	40.1545	41.0088	42.7175	44.4262	46.1349
178	.3199	.1742	.0286	.8830	.7373	.5917	.4460	.3004	.1547	.0091	.7178	.4265	.1352
181	.3201	.1745	.0288	.8832	.7376	.5919	.4463	.3007	.1550	.0094	.7181	.4268	.1355
184	.3204	.1747	.0291	.8835	.7378	.5922	.4466	.3009	.1553	.0097	.7184	.4271	.1359
187	.3206	.1750	.0293	.8837	.7381	.5925	.4468	.3012	.1556	.0100	7187	.4274	.1362
427190	33.3208	34.1752	35.0296	35.8840	36.7383	37.5927	38.4471	39.3015	40.1559	41.0102	42.7190	44.4278	46.1365
193	.3211	.1754	.0298	.8842	.7386	.5930	.4474	.3018	.1561	.0105	.7193	.4281	.1368
196	.3213	.1757	.0301	.8845	.7389	.5932	.4476	.3020	.1564	.0108	.7196	.4285	.1372
199	.3215	.1759	.0303	.8847	.7391	.5935	.4479	.3023	.1567	.0111	.7199	.4287	.1375
202	.3218	.1762	.0306	.8850	.7394	.5938	.4482	.3026	.1570	.0114	.7202	.4290	.1378
427205	33.3220	34.1764	35.0308	35.8852	36.7396	37.5940	38.4485	39.3029	40.1573	41.0117	42.7205	44.4293	46.1381
208	.3222	.1766	.0311	.8855	.7399	.5943	.4487	.3031	.1576	.0120	.7208	.4296	.1385
211	.3225	.1769	.0313	.8857	.7401	.5946	.4490	.3034	.1578	.0123	.7211	.4299	.1388
214	.3227	.1771	.0315	.8860	.7404	.5948	.4493	.3037	.1581	.0125	.7214	.4303	.1391
217	.3229	.1774	.0318	.8862	.7407	.5951	.4495	.3040	.1584	.0128	.7217	.4306	.1394
427220	33.3232	34.1776	35.0320	35.8865	36.7409	37.5954	38.4498	39.3042	40.1587	41.0131	42.7220	44.4309	46.1398
223	.3234	.1778	.0323	.8867	.7412	.5956	.4501	.3045	.1590	.0134	.7223	.4312	.1401
226	.3236	.1781	.0325	.8870	.7414	.5959	.4503	.3048	.1592	0137	.7226	.4315	.1404
229	.3239	.1783	.0328	.8872	.7417	.5962	.4506	.3051	.1595	.0140	.7229	.4318	.1407
232	.3241	.1786	.0330	.8875	.7420	.5964	.4509	.3053	.1598	.0143	.7232	.4321	.1411
427235	33.3243	34.1788	35.0333	35.8877	36.7422	37.5967	38.4512	39.3056	40.1601	41.0146	42.7235	44.4324	46.1414
238	.3246	.1790	.0335	.8880	.7425	.5969	.4514	.3059	.1604	.0148	.7238	.4328	.1417
241	.3248	.1793	.0338	.8882	.7427	.5972	.4517	.3062	.1607	.0151	.7241	.4331	.1420
244	.3250	.1795	.0340	.8885	.7430	.5975	.4520	.3064	.1609	.0154	.7244	.4334	.1424
247	.3253	.1798	.0343	.8887	.7432	.5977	.4522	.3067	.1612	.0157	.7247	.4337	.1427
427250	33.3255	34.1800	35.0345	35 8890	36.7435	37.5980	38.4525	39.3070	40.1615	41.0160	42.7250	44.4340	46.1430
253	.3257	.1802	.0347	.8893	.7438	.5983	.4528	.3073	.1618	.0163	.7253	.4343	.1433
256	.3260	.1805	.0350	.8895	.7440	.5985	.4530	.3076	.1621	.0166	.7256	.4346	.1436
259	.3262	.1807	.0352	.8898	.7443	.5988	.4533	.3078	.1623	.0169	.7259	.4349	.1440
262	.3264	.1810	.0355	.8900	.7445	.5991	.4536	.3081	.1626	.0172	.7262	.4352	.1443
427265	33.3267	34.1812	35.0357	35.8903	36.7448	37.5993	38.4539	39.3084	40.1629	41.0174	42.7265	44.4356	46.1446
268	.3269	.1814	.0360	.8905	.7450	.5996	.4541	.3087	.1632	.0177	.7268	.4359	.1449
271	.3271	.1817	.0362	.8908	.7453	.5998	.4544	.3089	.1635	.0180	.7271	.4362	.1453
274	.3274	.1819	.0365	.8910	7456	.6001	.4547	.3092	.1638	.0183	.7274	.4365	.1456
277	.3276	.1822	.0367	.8913	.7458	.6004	.4549	.3095	.1640	.0186	.7277	.4368	.1459
427280	33.3278	34.1824	35.0370	35.8915	36.7461	37.6006	38.4552	39.3098	40.1643	41.0189	42.7280	44.4371	46.1462
283	.3281	.1826	.0372	.8918	.7463	.6009	.4555	.3100	.1646	.0192	.7283	.4374	.1466
286	.3283	.1829	.0375	.8920	.7466	.6012	.4557	.3103	.1649	.0195	.7286	.4377	.1469
289	.3285	.1831	.0377	.8923	.7469	.6014	.4560	.3106	.1652	.0197	.7289	.4381	.1472
292	.3288	.1834	.0379	.8925	.7471	.6017	.4563	.3109	.1654	.0200	.7292	.4384	.1475
427295	33.3290	34.1836	35.0382	35.8928	36.7474	37.6020	38.4566	39.3111	40.1657	41.0203	42.7295	44.4387	46.1479
298	.3292	.1838	.0384	.8930	.7476	.6022	.4568	.3114	.1660	.0206	.7298	.4390	.1482
301	.3295	.1841	.0387	.8933	.7479	.6025	.4571	.3117	.1663	.0209	.7301	.4393	.1485
304	.3297	.1843	.0389	.8935	.7481	.6028	.4574	.3120	.1666	.0212	.7304	.4396	.1488
307	.3299	1846	.0392	.8938	.7484	.6030	.4576	.3122	.1669	.0215	.7307	.4399	.1492
427310	33.3302	34.1848	35.0394	35.8940	36.7487	37.6033	38.4579	39.3125	40.1671	41.0218	42.7310	44.4402	46.1495
313	.3304	.1850	.0397	.8943	.7489	.6035	.4582	.3128	.1674	.0220	.7313	.4406	.1498
316	.3306	.1853	.0399	.8945	.7492	.6038	.4584	.3131	.1677	.0223	.7316	.4409	.1501
319	.3309	.1855	.0402	.8948	.7494	.6041	.4587	.3133	.1680	.0226	.7319	.4412	.1505
322	.3311	.1858	.0404	.8950	.7497	.6043	.4590	.3136	.1683	.0229	.7322	.4415	.1508
427325	33.3314	34.1860	35.0407	35.8953	36.7500	37.6046	38.4593	39.3139	40.1686	41.0232	42.7325	44.4418	46.1511
328	.3316	.1862	.0409	.8956	.7502	.6049	.4595	.3142	.1688	.0235	.7328	.4421	.1514
331	.3318	.1865	.0411	.8958	.7505	.6051	.4598	.3145	.1691	.0238	.7331	.4424	.1517
334	.3321	.1867	.0414	.8961	.7507	.6054	.4601	.3147	.1694	.0241	.7334	.4427	.1521
337	.3323	.1870	.0416	.8963	.7510	.6057	.4603	.3150	.1697	.0244	.7337	.4430	.1524
427340	33.3325	34.1872	35.0419	35.8966	36.7512	37.6059	38.4606	39.3153	40.1700	41.0246	42.7340	44.4434	46.1527
343	.3328	.1874	.0421	.8968	.7515	.6062	.4609	.3156	.1702	.0249	.7343	.4437	.1530
346	.3330	.1877	.0424	.8971	.7518	.6064	.4611	.3158	.1705	.0252	.7346	.4440	.1534
349	.3332	.1879	.0426	.8973	.7520	.6067	.4614	.3161	.1708	.0255	.7349	.4443	.1537
352	.3335	.1882	.0429	.8976	.7523	.6070	.4617	.3164	.1711	.0258	.7352	.4446	.1540
427355	33.3337	34.1884	35.0431	35.8978	36.7525	37.6072	38.4620	39.3167	40.1714	41.0261	42.7355	44.4449	46.1543
358	.3339	.1886	.0434	.8981	.7528	.6075	.4622	.3169	.1717	.0264	.7358	.4452	.1547
361	.3342	.1889	.0436	.8983	.7530	.6078	.4625	.3172	.1719	.0267	.7361	.4455	.1550
364	.3344	.1891	.0438	.8986	.7533	.6080	.4628	.3175	.1722	.0269	.7364	.4459	.1553
367	.3346	.1894	.0441	.8988	.7536	.6083	.4630	.3178	.1725	.0272	.7367	.4462	.1556
427370	33.3349	34.1896	35.0443	35.8991	36.7538	37.6086	38.4633	39.3180	40.1728	41.0275	42.7370	44.4465	46.1560
373	.3351	.1898	.0446	.8993	.7541	.6088	.4636	.3183	.1731	.0278	.7373	.4468	.1563
376	.3353	.1901	.0448	.8996	.7543	.6091	.4638	.3186	.1733	.0281	.7376	.4471	.1566
379	.3356	.1903	.0451	.8998	.7546	.6094	.4641	.3189	.1736	.0284	.7379	.4474	.1569
382	.3358	.1906	.0453	.9001	.7549	.6096	.4644	.3191	.1739	.0287	.7382	.4477	.1573
427385	33.3360	34.1908	35.0456	35.9003	36.7551	37.6099	38.4647	39.3194	40.1742	41.0290	42.7385	44.4480	46.1576
388	.3363	.1910	.0458	.9006	.7554	.6101	.4649	.3197	.1745	.0292	.7388	.4484	.1579
391	.3365	.1913	.0461	.9008	.7556	.6104	.4652	.3200	.1748	.0295	.7391	.4487	.1582
394	.3367	.1915	.0463	.9011	.7559	.6107	.4655	.3202	.1750	.0298	.7394	.4490	.1586
397	.3370	.1918	.0466	.9013	.7561	.6109	.4657	.3205	.1753	.0301	.7397	.4493	.1589
427400	33.3372	34.1920	35.0468	35.9016	36.7564	37.6112	38.4660	39.3208	40.1756	41.0304	42.7400	44.4496	46.1592

MEGACYCLES PER SECOND

H A R M O N I C S

BASIC FREQ.	52	54	56	58	60	62	64	66	68	70	72	74	76
427400	22.2248	23.0796	23.9344	24.7892	25.6440	26.4988	27.3536	28.2084	29.0632	29.9180	30.7728	31.6276	32.4824
403	.2250	.0798	.9346	.7894	.6442	.4990	.3538	.2086	.0634	.9182	.7730	.6278	.4826
406	.2251	.0799	.9347	.7895	.6444	.4992	.3540	.2088	.0636	.9184	.7732	.6280	.4829
409	.2253	.0801	.9349	.7897	.6445	.4994	.3542	.2090	.0638	.9186	.7734	.6283	.4831
412	.2254	.0802	.9351	.7899	.6447	.4995	.3544	.2092	.0640	.9188	.7737	.6285	.4833
427415	22.2256	23.0804	23.9352	24.7901	25.6449	26.4997	27.3546	28.2094	29.0642	29.9191	30.7739	31.6287	32.4835
418	.2257	.0806	.9354	.7902	.6451	.4999	.3548	.2096	.0644	.9193	.7741	.6289	.4838
421	.2259	.0807	.9356	.7904	.6453	.5001	.3549	.2098	.0646	.9195	.7743	.6292	.4840
424	.2260	.0809	.9357	.7906	.6454	.5003	.3551	.2100	.0648	.9197	.7745	.6294	.4842
427	.2262	.0811	.9359	.7908	.6456	.5005	.3553	.2102	.0650	.9199	.7747	.6296	.4845
427430	22.2264	23.0812	23.9361	24.7909	25.6458	26.5007	27.3555	28.2104	29.0652	29.9201	30.7750	31.6298	32.4847
433	.2265	.0814	.9362	.7911	.6460	.5008	.3557	.2106	.0654	.9203	.7752	.6300	.4849
436	.2267	.0815	.9364	.7913	.6462	.5010	.3559	.2108	.0656	.9205	.7754	.6303	.4851
439	.2268	.0817	.9366	.7915	.6463	.5012	.3561	.2110	.0659	.9207	.7756	.6305	.4854
442	.2270	.0819	.9368	.7916	.6465	.5014	.3563	.2112	.0661	.9209	.7758	.6307	.4856
427445	22.2271	23.0820	23.9369	24.7918	25.6467	26.5016	27.3565	28 2114	29.0663	29.9212	30.7760	31.6309	32.4858
448	.2273	.0822	.9371	.7920	.6469	.5018	.3567	.2116	.0665	.9214	.7763	.6312	.4860
451	.2275	.0824	.9373	.7922	.6471	.5020	.3569	.2118	.0667	.9216	.7765	.6314	.4863
454	.2276	.0825	.9374	.7923	.6472	.5021	.3571	.2120	.0669	.9218	.7767	.6316	.4865
457	.2278	.0827	.9376	.7925	.6474	.5023	.3572	.2122	.0671	.9220	.7769	.6318	.4867
427460	22.2279	23.0828	23.9378	24.7927	25.6476	26.5025	27.3574	28.2124	29.0673	29.9222	30.7771	31.6320	32.4870
463	.2281	.0830	.9379	.7929	.6478	.5027	.3576	.2126	.0675	.9224	.7773	.6323	.4872
466	.2282	.0832	.9381	.7930	.6480	.5029	.3578	.2128	.0677	.9226	.7776	.6325	.4874
469	.2284	.0833	.9383	.7932	.6481	.5031	.3580	.2130	.0679	.9228	.7778	.6327	.4876
472	.2285	.0835	.9384	.7934	.6483	.5033	.3582	.2132	.0681	.9230	.7780	.6329	.4879
427475	22.2287	23.0837	23.9386	24.7936	25.6485	26.5035	27.3584	28.2134	29.0683	29.9233	30.7782	31.6332	32.4881
478	.2289	.0838	.9388	.7937	.6487	.5036	.3586	.2135	.0685	.9235	.7784	.6334	.4883
481	.2290	.0840	.9389	.7939	.6489	.5038	.3588	.2137	.0687	.9237	.7786	.6336	.4886
484	.2292	.0841	.9391	.7941	.6490	.5040	.3590	.2139	.0689	.9239	.7788	.6338	.4888
487	.2293	.0843	.9393	.7942	.6492	5042	.3592	.2141	.0691	.9241	.7791	.6340	.4890
427490	22.2295	23.0845	23.9394	24.7944	25.6494	26.5044	27.3594	28.2143	29.0693	29.9243	30.7793	31.6343	32.4892
493	.2296	.0846	.9396	.7946	.6496	.5046	.3596	.2145	.0695	.9245	.7795	.6345	.4895
496	.2298	.0848	.9398	.7948	.6498	.5048	.3597	.2147	.0697	.9247	.7797	.6347	.4897
499	.2299	.0849	.9399	.7949	.6499	.5049	.3599	.2149	.0699	.9249	.7799	.6349	.4899
502	.2301	.0851	.9401	.7951	.6501	.5051	.3601	.2151	.0701	.9251	.7801	.6351	.4902
427505	22.2303	23.0853	23.9403	24.7953	25.6503	26.5053	27.3603	28.2153	29.0703	29.9254	30.7804	31.6354	32.4904
508	.2304	.0854	.9404	.7955	.6505	.5055	.3605	.2155	.0705	.9256	.7806	.6356	.4906
511	.2306	.0856	.9406	.7956	.6507	.5057	.3607	.2157	.0707	.9258	.7808	.6358	.4908
514	.2307	.0858	.9408	.7958	.6508	.5059	.3609	.2159	.0710	.9260	.7810	.6360	.4911
517	.2309	.0859	.9410	.7960	.6510	.5061	.3611	.2161	.0712	.9262	.7812	.6363	.4913
427520	22.2310	23.0861	23.9411	24.7962	25.6512	26.5062	27.3613	28.2163	29.0714	29.9264	30.7814	31.6365	32.4915
523	.2312	.0862	.9413	.7963	.6514	.5064	.3615	.2165	.0716	.9266	.7817	.6367	.4917
526	.2314	.0864	.9415	.7965	.6516	.5066	.3617	.2167	.0718	.9268	.7819	.6369	.4920
529	.2315	.0866	.9416	.7967	.6517	.5068	.3619	.2169	.0720	.9270	.7821	.6371	.4922
532	.2317	.0867	.9418	.7969	.6519	.5070	.3620	.2171	.0722	.9272	.7823	.6374	.4924
427535	22.2318	23.0869	23.9420	24.7970	25.6521	26.5072	27.3622	28.2173	29.0724	29.9275	30.7825	31.6376	32.4927
538	.2320	.0871	.9421	.7972	.6523	.5074	.3624	.2175	.0726	.9277	.7827	.6378	.4929
541	.2321	.0872	.9423	.7974	.6525	.5075	.3626	.2177	.0728	.9279	.7830	.6380	.4931
544	.2323	.0874	.9425	.7976	.6526	.5077	.3628	.2179	.0730	.9281	.7832	.6383	.4933
547	.2324	.0875	.9426	.7977	.6528	.5079	.3630	.2181	.0732	.9283	.7834	.6385	.4936
427550	22.2326	23.0877	23.9428	24.7979	25.6530	26.5081	27.3632	28.2183	29.0734	29.9285	30.7836	31.6387	32.4938
553	.2328	.0879	.9430	.7981	.6532	.5083	.3634	.2185	.0736	.9287	.7838	.6389	.4940
556	.2329	.0880	.9431	.7982	.6534	.5085	.3636	.2187	.0738	.9289	.7840	.6391	.4943
559	.2331	.0882	.9433	.7984	.6535	.5087	.3638	.2189	.0740	.9291	.7842	.6394	.4945
562	.2332	.0883	.9435	.7986	.6537	.5088	.3640	.2191	.0742	.9293	.7845	.6396	.4947
427565	22.2334	23.0885	23.9436	24.7988	25.6539	26.5090	27.3642	28.2193	29.0744	29.9296	30.7847	31.6398	32.4949
568	.2335	.0887	.9438	.7989	.6541	.5092	.3644	.2195	.0746	.9298	.7849	.6400	.4952
571	.2337	.0888	.9440	.7991	.6543	.5094	.3645	.2197	.0748	.9300	.7851	.6403	.4954
574	.2338	.0890	.9441	.7993	.6544	.5096	.3647	.2199	.0750	.9302	.7853	.6405	.4956
577	.2340	.0892	.9443	.7995	.6546	.5098	.3649	.2201	.0752	.9304	.7855	.6407	.4959
427580	22.2342	23.0893	23.9445	24.7996	25.6548	26.5100	27.3651	28.2203	29.0754	29.9306	30.7858	31.6409	32.4961
583	.2343	.0895	.9446	.7998	.6550	.5101	.3653	.2205	.0756	.9308	.7860	.6411	.4963
586	.2345	.0896	.9448	.8000	.6552	.5103	.3655	.2207	.0758	.9310	.7862	.6414	.4965
589	.2346	.0898	.9450	.8002	.6553	.5105	.3657	.2209	.0761	.9312	.7864	.6416	.4968
592	.2348	.0900	.9452	.8003	.6555	.5107	.3659	.2211	.0763	.9314	.7866	.6418	.4970
427595	22.2349	23.0901	23.9453	24.8005	25.6557	26.5109	27.3661	28.2213	29.0765	29.9317	30.7868	31.6420	32.4972
598	.2351	.0903	.9455	.8007	.6559	.5111	.3663	.2215	.0767	.9319	.7871	.6423	.4974
601	.2353	.0905	.9457	.8009	.6561	.5113	.3665	.2217	.0769	.9321	.7873	.6425	.4977
604	.2354	.0906	.9458	.8010	.6562	.5114	.3667	.2219	.0771	.9323	.7875	.6427	.4979
607	.2356	.0908	.9460	.8012	.6564	.5116	.3668	.2221	.0773	.9325	.7877	.6429	.4981
427610	22.2357	23.0909	23.9462	24.8014	25.6566	26.5118	27.3670	28.2223	29.0775	29.9327	30.7879	31.6431	32.4984
613	.2359	.0911	.9463	.8016	.6568	.5120	.3672	.2225	.0777	.9329	.7881	.6434	.4986
616	.2360	.0913	.9465	.8017	.6570	.5122	.3674	.2227	.0779	.9331	.7884	.6436	.4988
619	.2362	.0914	.9467	.8019	.6571	.5124	.3676	.2229	.0781	.9333	.7886	.6438	.4990
622	.2363	.0916	.9468	.8021	.6573	.5126	.3678	.2231	.0783	.9335	.7888	.6440	.4993
427625	22.2365	23.0918	23.9470	24.8023	25.6575	26.5128	27.3680	28.2233	29.0785	29.9338	30.7890	31.6443	32.4995
628	.2367	.0919	.9472	.8024	.6577	.5129	.3682	.2234	.0787	.9340	.7892	.6445	.4997
631	.2368	.0921	.9473	.8026	.6579	.5131	.3684	.2236	.0789	.9342	.7894	.6447	.5000
634	.2370	.0922	.9475	.8028	.6580	.5133	.3686	.2238	.0791	.9344	.7896	.6449	.5002
637	.2371	.0924	.9477	.8029	.6582	.5135	.3688	.2240	.0793	.9346	.7899	.6451	.5004
427640	22.2373	23.0926	23.9478	24.8031	25.6584	26.5137	27.3690	28.2242	29.0795	29.9348	30.7901	31.6454	32.5006
643	.2374	.0927	.9480	.8033	.6586	.5139	.3692	.2244	.0797	.9350	.7903	.6456	.5009
646	.2376	.0929	.9482	.8035	.6588	.5141	.3693	.2246	.0799	.9352	.7905	.6458	.5011
649	.2377	.0930	.9483	.8036	.6589	.5142	.3695	.2248	.0801	.9354	.7907	.6460	.5013
652	.2379	.0932	.9485	.8038	.6591	.5144	.3697	.2250	.0803	.9356	.7909	.6462	.5016
427655	22.2381	23.0934	23.9487	24.8040	25.6593	26.5146	27.3699	28.2252	29.0805	29.9359	30.7912	31.6465	32.5018
658	.2382	.0935	.9488	.8042	.6595	.5148	.3701	.2254	.0807	.9361	.7914	.6467	.5020
661	.2384	.0937	.9490	.8043	.6597	.5150	.3703	.2256	.0809	.9363	.7916	.6469	.5022
664	.2385	.0939	.9492	.8045	.6598	.5152	.3705	.2258	.0812	.9365	.7918	.6471	.5025
667	.2387	.0940	.9494	.8047	.6600	.5154	.3707	.2260	.0814	.9367	.7920	.6474	.5027
427670	22.2388	23.0942	23.9495	24.8049	25.6602	26.5155	27.3709	28.2262	29.0816	29.9369	30.7922	31.6476	32.5029
673	.2390	.0943	.9497	.8050	.6604	.5157	.3711	.2264	.0818	.9371	.7925	.6478	.5031
676	.2392	.0945	.9499	.8052	.6606	.5159	.3713	.2266	.0820	.9373	.7927	.6480	.5034
679	.2393	.0947	.9500	.8054	.6607	.5161	.3715	.2268	.0822	.9375	.7929	.6482	.5036
682	.2395	.0948	.9502	.8056	.6609	.5163	.3716	.2270	.0824	.9377	.7931	.6485	.5038
427685	22.2396	23.0950	23.9504	24.8057	25.6611	26.5165	27.3718	28.2272	29.0826	29.9380	30.7933	31.6487	32.5041
688	.2398	.0952	.9505	.8059	.6613	.5167	.3720	.2274	.0828	.9382	.7935	.6489	.5043
691	.2399	.0953	.9507	.8061	.6615	.5168	.3722	.2276	.0830	.9384	.7938	.6491	.5045
694	.2401	.0955	.9509	.8063	.6616	.5170	.3724	.2278	.0832	.9386	.7940	.6494	.5047
697	.2402	.0956	.9510	.8064	.6618	.5172	.3726	.2280	.0834	.9388	.7942	.6496	.5050
427700	22.2404	23.0958	23.9512	24.8066	25.6620	26.5174	27.3728	28.2282	29.0836	29.9390	30.7944	31.6498	32.5052

MEGACYCLES PER SECOND

BASIC FREQ.	HARMONICS 78	80	82	84	86	88	90	92	94	96	100	104	108
427400	33.3372	34.1920	35.0468	35.9016	36.7564	37.6112	38.4660	39.3208	40.1756	41.0304	42.7400	44.4496	46.1592
403	.3374	.1922	.0470	.9019	.7567	.6115	.4663	.3211	.1759	.0307	.7403	.4499	.1595
406	.3377	.1925	.0473	.9021	.7569	.6117	.4665	.3214	.1762	.0310	.7406	.4502	.1598
409	.3379	.1927	.0475	.9024	.7572	.6120	.4668	.3216	.1764	.0313	.7409	.4505	.1602
412	.3381	.1930	.0478	.9026	.7574	.6123	.4671	.3219	.1767	.0316	.7412	.4508	.1605
427415	33.3384	34.1932	35.0480	35.9029	36.7577	37.6125	38.4674	39.3222	40.1770	41.0318	42.7415	44.4512	46.1608
418	.3386	.1934	.0483	.9031	.7579	.6128	.4676	.3225	.1773	.0321	.7418	.4515	.1611
421	.3388	.1937	.0485	.9034	.7582	.6130	.4679	.3227	.1776	.0324	.7421	.4518	.1615
424	.3391	.1939	.0488	.9036	.7585	.6133	.4682	.3230	.1779	.0327	.7424	.4521	.1618
427	.3393	.1942	.0490	.9039	.7587	.6136	.4684	.3233	.1781	.0330	.7427	.4524	.1621
427430	33.3395	34.1944	35.0493	35.9041	36.7590	37.6138	38.4687	39.3236	40.1784	41.0333	42.7430	44.4527	46.1624
433	.3398	.1946	.0495	.9044	.7592	.6141	.4690	.3238	.1787	.0336	.7433	.4530	.1628
436	.3400	.1949	.0498	.9046	.7595	.6144	.4692	.3241	.1790	.0339	.7436	.4533	.1631
439	.3402	.1951	.0500	.9049	.7598	.6146	.4695	.3244	.1793	.0341	.7439	.4537	.1634
442	.3405	.1954	.0502	.9051	.7600	.6149	.4698	.3247	.1795	.0344	.7442	.4540	.1637
427445	33.3407	34.1956	35.0505	35.9054	36.7603	37.6152	38.4701	39.3249	40.1798	41.0347	42.7445	44.4543	46.1641
448	.3409	.1958	.0507	.9056	.7605	.6154	.4703	.3252	.1801	.0350	.7448	.4546	.1644
451	.3412	.1961	.0510	.9059	.7608	.6157	.4706	.3255	.1804	.0353	.7451	.4549	.1647
454	.3414	.1963	.0512	.9061	.7610	.6160	.4709	.3258	.1807	.0356	.7454	.4552	.1650
457	.3416	.1966	.0515	.9064	.7613	.6162	.4711	.3260	.1810	.0359	.7457	.4555	.1654
427460	33.3419	34.1968	35.0517	35.9066	36.7616	37.6165	38.4714	39.3263	40.1812	41.0362	42.7460	44.4558	46.1657
463	.3421	.1970	.0520	.9069	.7618	.6167	.4717	.3266	.1815	.0364	.7463	.4562	.1660
466	.3423	.1973	.0522	.9071	.7621	.6170	.4719	.3269	.1818	.0367	.7466	.4565	.1663
469	.3426	.1975	.0525	.9074	.7623	.6173	.4722	.3271	.1821	.0370	.7469	.4568	.1667
472	.3428	.1978	.0527	.9076	.7626	.6175	.4725	.3274	.1824	.0373	.7472	.4571	.1670
427475	33.3431	34.1980	35.0530	35.9079	36.7629	37.6178	38.4728	39.3277	40.1827	41.0376	42.7475	44.4574	46.1673
478	.3433	.1982	.0532	.9082	.7631	.6181	.4730	.3280	.1829	.0379	.7478	.4577	.1676
481	.3435	.1985	.0534	.9084	.7634	.6183	.4733	.3283	.1832	.0382	.7481	.3580	.1679
484	.3438	.1987	.0537	.9087	.7636	.6186	.4736	.3285	.1835	.0385	.7484	.4583	.1683
487	.3440	.1990	.0539	.9089	.7639	.6189	.4738	.3288	.1838	.0388	.7487	.4586	.1686
427490	33.3442	34.1992	35.0542	35.9092	36.7641	37.6191	38.4741	39.3291	40.1841	41.0390	42.7490	44.4590	46.1689
493	.3445	.1994	.0544	.9094	.7644	.6194	.4744	.3294	.1843	.0393	.7493	.4593	.1692
496	.3447	.1997	.0547	.9097	.7647	.6196	.4746	.3296	.1846	.0396	.7496	.4596	.1696
499	.3449	.1999	.0549	.9099	.7649	.6199	.4749	.3299	.1849	.0399	.7499	.4599	.1699
502	.3452	.2002	.0552	.9102	.7652	.6202	.4752	.3302	.1852	.0402	.7502	.4602	.1702
427505	33.3454	34.2004	35.0554	35.9104	36.7654	37.6204	38.4755	39.3305	40.1855	41.0405	42.7505	44.4605	46.1705
508	.3456	.2006	.0557	.9107	.7657	.6207	.4757	.3307	.1858	.0408	.7508	.4608	.1709
511	.3459	.2009	.0559	.9109	.7659	.6210	.4760	.3310	.1860	.0411	.7511	.4611	.1712
514	.3461	.2011	.0561	.9112	.7662	.6212	.4763	.3313	.1863	.0413	.7514	.4615	.1715
517	.3463	.2014	.0564	.9114	.7665	.6215	.4765	.3316	.1866	.0416	.7517	.4618	.1718
427520	33.3466	34.2016	35.0566	35.9117	36.7667	37.6218	38.4768	39.3318	40.1869	41.0419	42.7520	44.4621	46.1722
523	.3468	.2018	.0569	.9119	.7670	.6220	.4771	.3321	.1872	.0422	.7523	.4624	.1725
526	.3470	.2021	.0571	.9122	.7672	.6223	.4773	.3324	.1874	.0425	.7526	.4627	.1728
529	.3473	.2023	.0574	.9124	.7675	.6226	.4776	.3327	.1877	.0428	.7529	.4630	.1731
532	.3475	.2026	.0576	.9127	.7678	.6228	.4779	.3329	.1880	.0431	.7532	.4633	.1735
427535	33.3477	34.2028	35.0579	35.9129	36.7680	37.6231	38.4782	39.3332	40.1883	41.0434	42.7535	44.4636	46.1738
538	.3480	.2030	.0581	.9132	.7683	.6233	.4784	.3335	.1886	.0436	.7538	.4640	.1741
541	.3482	.2033	.0584	.9134	.7685	.6236	.4787	.3338	.1889	.0439	.7541	.4643	.1744
544	.3484	.2035	.0586	.9137	.7688	.6239	.4790	.3340	.1891	.0442	.7544	.4646	.1748
547	.3487	.2038	.0589	.9139	.7690	.6241	.4792	.3343	.1894	.0445	.7547	.4649	.1751
427550	33.3489	34.2040	35.0591	35.9142	36.7693	37.6244	38.4795	39.3346	40.1897	41.0448	42.7550	44.4652	46.1754
553	.3491	.2042	.0593	.9145	.7696	.6247	.4798	.3349	.1900	.0451	.7553	.4655	.1757
556	.3494	.2045	.0596	.9147	.7698	.6249	.4800	.3352	.1903	.0454	.7556	.4658	.1760
559	.3496	.2047	.0598	.9150	.7701	.6252	.4803	.3354	.1905	.0457	.7559	.4661	.1764
562	.3498	.2050	.0601	.9152	.7703	.6255	.4806	.3357	.1908	.0460	.7562	.4664	.1767
427565	33.3501	34.2052	35.0603	35.9155	36.7706	37.6257	38.4809	39.3360	40.1911	41.0462	42.7565	44.4668	46.1770
568	.3503	.2054	.0606	.9157	.7708	.6260	.4811	.3363	.1914	.0465	.7568	.4671	.1773
571	.3505	.2057	.0608	.9160	.7711	.6262	.4814	.3365	.1917	.0468	.7571	.4674	.1777
574	.3508	.2059	.0611	.9162	.7714	.6265	.4817	.3368	.1920	.0471	.7574	.4677	.1780
577	.3510	.2062	.0613	.9165	.7716	.6268	.4819	.3371	.1922	.0474	.7577	.4680	.1783
427580	33.3512	34.2064	35.0616	35.9167	36.7719	37.6270	38.4822	39.3374	40.1925	41.0477	42.7580	44.4683	46.1786
583	.3515	.2066	.0618	.9170	.7721	.6273	.4825	.3376	.1928	.0480	.7583	.4686	.1790
586	.3517	.2069	.0621	.9172	.7724	.6276	.4827	.3379	.1931	.0483	.7586	.4689	.1793
589	.3519	.2071	.0623	.9175	.7727	.6278	.4830	.3382	.1934	.0485	.7589	.4693	.1796
592	.3522	.2074	.0625	.9177	.7729	.6281	.4833	.3385	.1936	.0488	.7592	.4696	.1799
427595	33.3524	34.2076	35.0628	35.9180	36.7732	37.6284	38.4836	39.3387	40.1939	41.0491	42.7595	44.4699	46.1803
598	.3526	.2078	.0630	.9182	.7734	.6286	.4838	.3390	.1942	.0494	.7598	.4702	.1806
601	.3529	.2081	.0633	.9185	.7737	.6289	.4841	.3393	.1945	.0497	.7601	.4705	.1809
604	.3531	.2083	.0635	.9187	.7739	.6292	.4844	.3396	.1948	.0500	.7604	.4708	.1812
607	.3533	.2086	.0638	.9190	.7742	.6294	.4846	.3398	.1951	.0503	.7607	.4711	.1816
427610	33.3536	34.2088	35.0640	35.9192	36.7745	37.6297	38.4849	39.3401	40.1953	41.0506	42.7610	44.4714	46.1819
613	.3538	.2090	.0643	.9195	.7747	.6299	.4852	.3404	.1956	.0508	.7613	.4718	.1822
616	.3540	.2093	.0645	.9197	.7750	.6302	.4854	.3407	.1959	.0511	.7616	.4721	.1825
619	.3543	.2095	.0648	.9200	.7752	.6305	.4857	.3409	.1962	.0514	.7619	.4724	.1829
622	.3545	.2098	.0650	.9202	.7755	.6307	.4860	.3412	.1965	.0517	.7622	.4727	.1832
427625	33.3548	34.2100	35.0653	35.9205	36.7758	37.6310	38.4863	39.3415	40.1968	41.0520	42.7625	44.4730	46.1835
628	.3550	.2102	.0655	.9208	.7760	.6313	.4865	.3418	.1970	.0523	.7628	.4733	.1838
631	.3552	.2105	.0657	.9210	.7763	.6315	.4868	.3421	.1973	.0526	.7631	.4736	.1841
634	.3555	.2107	.0660	.9213	.7765	.6318	.4871	.3423	.1976	.0529	.7634	.4739	.1845
637	.3557	.2110	.0662	.9215	.7768	.6321	.4873	.3426	.1979	.0532	.7637	.4742	.1848
427640	33.3559	34.2112	35.0665	35.9218	36.7770	37.6323	38.4876	39.3429	40.1982	41.0534	42.7640	44.4746	46.1851
643	.3562	.2114	.0667	.9220	.7773	.6326	.4879	.3432	.1984	.0537	.7643	.4749	.1854
646	.3564	.2119	.0670	.9223	.7776	.6328	.4881	.3434	.1987	.0540	.7646	.4752	.1858
649	.3566	.2119	.0672	.9225	.7778	.6331	.4884	.3437	.1990	.0543	.7649	.4755	.1861
652	.3569	.2122	.0675	.9228	.7781	.6334	.4887	.3440	.1993	.0546	.7652	.4758	.1864
427655	33.3571	34.2124	35.0677	35.9230	36.7783	37.6336	38.4890	39.3443	40.1996	41.0549	42.7655	44.4761	46.1867
658	.3573	.2126	.0680	.9233	.7786	.6339	.4892	.3445	.1999	.0552	.7658	.4764	.1871
661	.3576	.2129	.0682	.9235	.7788	.6342	.4895	.3448	.2001	.0555	.7661	.4767	.1874
664	.3578	.2131	.0684	.9238	.7791	.6344	.4898	.3451	.2004	.0557	.7664	.4771	.1877
667	.3580	.2134	.0687	.9240	.7794	.6347	.4900	.3454	.2007	.0560	.7667	.4774	.1880
427670	33.3583	34.2136	35.0689	35.9243	36.7796	37.6350	38.4903	39.3456	40.2010	41.0563	42.7670	44.4777	46.1884
673	.3585	.2138	.0692	.9245	.7799	.6352	.4906	.3459	.2013	.0566	.7673	.4780	.1887
676	.3587	.2141	.0694	.9248	.7801	.6355	.4908	.3462	.2015	.0569	.7676	.4783	.1890
679	.2590	.2143	.0697	.9250	.7804	.6358	.4911	.3465	.2018	.0572	.7679	.4786	.1893
682	.3592	.2146	.0699	.9253	.7807	.6360	.4914	.3467	.2021	.0575	.7682	.4789	.1897
427685	33.3594	34.2148	35.0702	35.9255	36.7809	37.6363	38.4917	39.3470	40.2024	41.0578	42.7685	44.4792	46.1900
688	.3597	.2150	.0704	.9258	.7812	.6365	.4919	.3473	.2027	.0580	.7688	.4796	.1903
691	.3599	.2153	.0707	.9260	.7814	.6368	.4922	.3476	.2030	.0583	.7691	.4799	.1906
694	.3601	.2155	.0709	.9263	.7817	.6371	.4925	.3478	.2032	.0586	.7694	.4802	.1910
697	.3604	.2158	.0712	.9265	.7819	.6373	.4927	.3481	.2035	.0589	.7697	.4805	.1913
427700	33.3606	34.2160	35.0714	35.9268	36.7822	37.6376	38.4930	39.3484	40.2038	41.0592	42.7700	44.4808	46.1916

MEGACYCLES PER SECOND

H A R M O N I C S

BASIC FREQ.	52	54	56	58	60	62	64	66	68	70	72	74	76
427700	22.2404	23.0958	23.9512	24.8066	25.6620	26.5174	27.3728	28.2282	29.0836	29.9390	30.7944	31.6498	32.5052
703	.2406	.0960	.9514	.8068	.6622	.5176	.3730	.2284	.0838	.9392	.7946	.6500	.5054
706	.2407	.0961	.9515	.8069	.6624	.5178	.3732	.2286	.0840	.9394	.7948	.6502	.5057
709	.2409	.0963	.9517	.8071	.6625	.5180	.3734	.2288	.0842	.9396	.7950	.6505	.5059
712	.2410	.0964	.9519	.8073	.6627	.5181	.3736	.2290	.0844	.9398	.7953	.6507	.5061
427715	22.2412	23.0966	23.9520	24.8075	25.6629	26.5183	27.3738	28.2292	29.0846	29.9401	30.7955	31.6509	32.5063
718	.2413	.0968	.9522	.8076	.6631	.5185	.3740	.2294	.0848	.9403	.7957	.6511	.5066
721	.2415	.0969	.9524	.8078	.6633	.5187	.3741	.2296	.0850	.9405	.7959	.6514	.5068
724	.2416	.0971	.9525	.8080	.6634	.5189	.3743	.2298	.0852	.9407	.7961	.6516	.5070
727	.2418	.0973	.9527	.8082	.6636	.5191	.3745	.2300	.0854	.9409	.7963	.6518	.5073
427730	22.2420	23.0974	23.9529	24.8083	25.6638	26.5193	27.3747	28.2302	29.0856	29.9411	30.7966	31.6520	32.5075
733	.2421	.0976	.9530	.8085	.6640	.5194	.3749	.2304	.0858	.9413	.7968	.6522	.5077
736	.2423	.0977	.9532	.8087	.6642	.5196	.3751	.2306	.0860	.9415	.7970	.6525	.5079
739	.2424	.0979	.9534	.8089	.6643	.5198	.3753	.2308	.0863	.9417	.7972	.6527	.5082
742	.2426	.0981	.9536	.8090	.6645	.5200	.3755	.2310	.0865	.9419	.7974	.6529	.5084
427745	22.2427	23.0982	23.9537	24.8092	25.6647	26.5202	27.3757	28.2312	29.0867	29.9422	30.7976	31.6531	32.5086
748	.2429	.0984	.9539	.8094	.6649	.5204	.3759	.2314	.0869	.9424	.7979	.6534	.5088
751	.2431	.0986	.9541	.8096	.6651	.5206	.3761	.2316	.0871	.9426	.7981	.6536	.5091
754	.2432	.0987	.9542	.8097	.6652	.5207	.3763	.2318	.0873	.9428	.7983	.6538	.5093
757	.2434	.0989	.9544	.8099	.6654	.5209	.3764	.2320	.0875	.9430	.7985	.6540	.5095
427760	22.2435	23.0990	23.9546	24.8101	25.6656	26.5211	27.3766	28.2322	29.0877	29.9432	30.7987	31.6542	32.5098
763	.2437	.0992	.9547	.8103	.6658	.5213	.3768	.2324	.0879	.9434	.7989	.6545	.5100
766	.2438	.0994	.9549	.8104	.6660	.5215	.3770	.2326	.0881	.9436	.7992	.6547	.5102
769	.2440	.0995	.9551	.8106	.6661	.5217	.3772	.2328	.0883	.9438	.7994	.6549	.5104
772	.2441	.0997	.9552	.8108	.6663	.5219	.3774	.2330	.0885	.9440	.7996	.6551	.5107
427775	22.2443	23.0999	23.9554	24.8110	25.6665	26.5221	27.3776	28.2332	29.0887	29.9443	30.7998	31.6554	32.5109
778	.2445	.1000	.9556	.8111	.6667	.5222	.3778	.2333	.0889	.9445	.8000	.6556	.5111
781	.2446	.1002	.9557	.8113	.6669	.5224	.3780	.2335	.0891	.9447	.8002	.6558	.5114
784	.2448	.1003	.9559	.8115	.6670	.5226	.3782	.2337	.0893	.9449	.8004	.6560	.5116
787	.2449	.1005	.9561	.8116	.6672	.5228	.3784	.2339	.0895	.9451	.8007	.6562	.5118
427790	22.2451	23.1007	23.9562	24.8118	25.6674	26.5230	27.3786	28.2341	29.0897	29.9453	30.8009	31.6565	32.5120
793	.2452	.1008	.9564	.8120	.6676	.5232	.3788	.2343	.0899	.9455	.8011	.6567	.5123
796	.2454	.1010	.9566	.8122	.6678	.5234	.3789	.2345	.0901	.9457	.8013	.6569	.5125
799	.2455	.1011	.9567	.8123	.6679	.5235	.3791	.2347	.0903	.9459	.8015	.6571	.5127
802	.2457	.1013	.9569	.8125	.6681	.5237	.3793	.2349	.0905	.9461	.8017	.6573	.5130
427805	22.2459	23.1015	23.9571	24.8127	25.6683	26.5239	27.3795	28.2351	29.0907	29.9464	30.8020	31.6576	32.5132
808	.2460	.1016	.9572	.8129	.6685	.5241	.3797	.2353	.0909	.9466	.8022	.6578	.5134
811	.2462	.1018	.9574	.8130	.6687	.5243	.3799	.2355	.0911	.9468	.8024	.6580	.5136
814	.2463	.1020	.9576	.8132	.6688	.5245	.3801	.2357	.0914	.9470	.8026	.6582	.5139
817	.2465	.1021	.9578	.8134	.6690	.5247	.3803	.2359	.0916	.9472	.8028	.6585	.5141
427820	22.2466	23.1023	23.9579	24.8136	25.6692	26.5248	27.3805	28.2361	29.0918	29.9474	30.8030	31.6587	32.5143
823	.2468	.1024	.9581	.8137	.6694	.5250	.3807	.2363	.0920	.9476	.8033	.6589	.5145
826	.2470	.1026	.9583	.8139	.6696	.5252	.3809	.2365	.0922	.9478	.8035	.6591	.5148
829	.2471	.1028	.9584	.8141	.6697	.5254	.3811	.2367	.0924	.9480	.8037	.6593	.5150
832	.2473	.1029	.9586	.8143	.6699	.5256	.3812	.2369	.0926	.9482	.8039	.6596	.5152
427835	22.2474	23.1031	23.9588	24.8144	25.6701	26.5258	27.3814	28.2371	29.0928	29.9485	30.8041	31.6598	32.5155
838	.2476	.1033	.9589	.8146	.6703	.5260	.3816	.2373	.0930	.9487	.8043	.6600	.5157
841	.2477	.1034	.9591	.8148	.6705	.5261	.3818	.2375	.0932	.9489	.8046	.6602	.5159
844	.2479	.1036	.9593	.8150	.6706	.5263	.3820	.2377	.0934	.9491	.8048	.6605	.5161
847	.2480	.1037	.9594	.8151	.6708	.5265	.3822	.2379	.0936	.9493	.8050	.6607	.5164
427850	22.2482	23.1039	23.9596	24.8153	25.6710	26.5267	27.3824	28.2381	29.0938	29.9495	30.8052	31.6609	32.5166
853	.2484	.1041	.9598	.8155	.6712	.5269	.3826	.2383	.0940	.9497	.8054	.6611	.5168
856	.2485	.1042	.9599	.8156	.6714	.5271	.3828	.2385	.0942	.9499	.8056	.6613	.5171
859	.2487	.1044	.9601	.8158	.6715	.5273	.3830	.2387	.0944	.9501	.8058	.6616	.5173
862	.2488	.1045	.9603	.8160	.6717	.5274	.3832	.2389	.0946	.9503	.8061	.6618	.5175
427865	22.2490	23.1047	23.9604	24.8162	25.6719	26.5276	27.3834	28.2391	29.0948	29.9506	30.8063	31.6620	32.5177
868	.2491	.1049	.9606	.8163	.6721	.5278	.3836	.2393	.0950	.9508	.8065	.6622	.5180
871	.2493	.1050	.9608	.8165	.6723	.5280	.3837	.2395	.0952	.9510	.8067	.6625	.5182
874	.2494	.1052	.9609	.8167	.6724	.5282	.3839	.2397	.0954	.9512	.8069	.6627	.5184
877	.2496	.1054	.9611	.8169	.6726	.5284	.3841	.2399	.0956	.9514	.8071	.6629	.5187
427880	22.2498	23.1055	23.9613	24.8170	25.6728	26.5286	27.3843	28.2401	29.0958	29.9516	30.8074	31.6631	32.5189
883	.2499	.1057	.9614	.8172	.6730	.5287	.3845	.2403	.0960	.9518	.8076	.6633	.5191
886	.2501	.1058	.9616	.8174	.6732	.5289	.3847	.2405	.0962	.9520	.8078	.6636	.5193
889	.2502	.1060	.9618	.8176	.6733	.5291	.3849	.2407	.0965	.9522	.8080	.6638	.5196
892	.2504	.1062	.9620	.8177	.6735	.5293	.3851	.2409	.0967	.9524	.8082	.6640	.5198
427895	22.2505	23.1063	23.9621	24.8179	25.6737	26.5295	27.3853	28.2411	29.0969	29.9527	30.8084	31.6642	32.5200
898	.2507	.1065	.9623	.8181	.6739	.5297	.3855	.2413	.0971	.9529	.8087	.6645	.5202
901	.2509	.1067	.9625	.8183	.6741	.5299	.3857	.2415	.0973	.9531	.8089	.6647	.5205
904	.2510	.1068	.9626	.8184	.6742	.5300	.3859	.2417	.0975	.9533	.8091	.6649	.5207
907	.2512	.1070	.9628	.8186	.6744	.5302	.3860	.2419	.0977	.9535	.8093	.6651	.5209
427910	22.2513	23.1071	23.9630	24.8188	25.6746	26.5304	27.3862	28.2421	29.0979	29.9537	30.8095	31.6653	32.5212
913	.2515	.1073	.9631	.8190	.6748	.5306	.3864	.2423	.0981	.9539	.8097	.6656	.5214
916	.2516	.1075	.9633	.8191	.6750	.5308	.3866	.2425	.0983	.9541	.8100	.6658	.5216
919	.2518	.1076	.9635	.8193	.6751	.5310	.3868	.2427	.0985	.9543	.8102	.6660	.5218
922	.2519	.1078	.9636	.8195	.6753	.5312	.3870	.2429	.0987	.9545	.8104	.6662	.5221
427925	22.2521	23.1080	23.9638	24.8197	25.6755	26.5314	27.3872	28.2431	29.0989	29.9548	30.8106	31.6665	32.5223
928	.2523	.1081	.9640	.8198	.6757	.5315	.3874	.2432	.0991	.9550	.8108	.6667	.5225
931	.2524	.1083	.9641	.8200	.6759	.5317	.3876	.2434	.0993	.9552	.8110	.6669	.5228
934	.2526	.1084	.9643	.8202	.6760	.5319	.3878	.2436	.0995	.9554	.8112	.6671	.5230
937	.2527	.1086	.9645	.8203	.6762	.5321	.3880	.2438	.0997	.9556	.8115	.6673	.5232
427940	22.2529	23.1088	23.9646	24.8205	25.6764	26.5323	27.3882	28.2440	29.0999	29.9558	30.8117	31.6676	32.5234
943	.2530	.1089	.9648	.8207	.6766	.5325	.3884	.2442	.1001	.9560	.8119	.6678	.5237
946	.2532	.1091	.9650	.8209	.6768	.5327	.3885	.2444	.1003	.9562	.8121	.6680	.5239
949	.2533	.1092	.9651	.8210	.6769	.5328	.3887	.2446	.1005	.9564	.8123	.6682	.5241
952	.2535	.1094	.9653	.8212	.6771	.5330	.3889	.2448	.1007	.9566	.8125	.6684	.5244
427955	22.2537	23.1096	23.9655	24.8214	25.6773	26.5332	27.3891	28.2450	29.1009	29.9569	30.8128	31.6687	32.5246
958	.2538	.1097	.9656	.8216	.6775	.5334	.3893	.2452	.1011	.9571	.8130	.6689	.5248
961	.2540	.1099	.9658	.8217	.6777	.5336	.3895	.2454	.1013	.9573	.8132	.6691	.5250
964	.2541	.1101	.9660	.8219	.6778	.5338	.3897	.2456	.1016	.9575	.8134	.6693	.5253
967	.2543	.1102	.9662	.8221	.6780	.5340	.3899	.2458	.1018	.9577	.8136	.6696	.5255
427970	22.2544	23.1104	23.9663	24.8223	25.6782	26.5341	27.3901	28.2460	29.1020	29.9579	30.8138	31.6698	32.5257
973	.2546	.1105	.9665	.8224	.6784	.5343	.3903	.2462	.1022	.9581	.8141	.6700	.5259
976	.2548	.1107	.9667	.8226	.6786	.5345	.3905	.2464	.1024	.9583	.8143	.6702	.5262
979	.2549	.1109	.9668	.8228	.6787	.5347	.3907	.2466	.1026	.9585	.8145	.6704	.5264
982	.2551	.1110	.9670	.8230	.6789	.5349	.3908	.2468	.1028	.9587	.8147	.6707	.5266
427985	22.2552	23.1112	23.9672	24.8231	25.6791	26.5351	27.3910	28.2470	29.1030	29.9590	30.8149	31.6709	32.5269
988	.2554	.1114	.9673	.8233	.6793	.5353	.3912	.2472	.1032	.9592	.8151	.6711	.5271
991	.2555	.1115	.9675	.8235	.6795	.5354	.3914	.2474	.1034	.9594	.8154	.6713	.5273
994	.2557	.1117	.9677	.8237	.6796	.5356	.3916	.2476	.1036	.9596	.8156	.6716	.5275
997	.2558	.1118	.9678	.8238	.6798	.5358	.3918	.2478	.1038	.9598	.8158	.6718	.5278
428000	22.2560	23.1120	23.9680	24.8240	25.6800	26.5360	27.3920	28.2480	29.1040	29.9600	30.8160	31.6720	32.5280

MEGACYCLES PER SECOND

H A R M O N I C S

BASIC FREQ.	78	80	82	84	86	88	90	92	94	96	100	104	108
427700	33.3606	34.2160	35.0714	35.9268	36.7822	37.6376	38.4930	39.3484	40.2038	41.0592	42.7700	44.4808	46.1916
703	.3608	.2162	.0716	.9271	.7825	.6379	.4933	.3487	.2041	.0595	.7703	.4811	.1919
706	.3611	.2165	.0719	.9273	.7827	.6381	.4935	.3490	.2044	.0598	.7706	.4814	.1922
709	.3613	.2167	.0721	.9276	.7830	.6384	.4938	.3492	.2046	.0601	.7709	.4817	.1926
712	.3615	.2170	.0724	.9278	.7832	.6387	.4941	.3495	.2049	.0604	.7712	.4820	.1929
427715	33.3618	34.2172	35.0726	35.9281	36.7835	37.6389	38.4944	39.3498	40.2052	41.0606	42.7715	44.4824	46.1932
718	.3620	.2174	.0729	.9283	.7837	.6392	.4946	.3501	.2055	.0609	.7718	.4827	.1935
721	.3622	.2177	.0731	.9286	.7840	.6394	.4949	.3503	.2058	.0612	.7721	.4830	.1939
724	.3625	.2179	.0734	.9288	.7843	.6397	.4952	.3506	.2061	.0615	.7724	.4833	.1942
727	.3627	.2182	.0736	.9291	.7845	.6400	.4954	.3509	.2063	.0618	.7727	.4836	.1945
427730	33.3629	34.2184	35.0739	35.9293	36.7848	37.6402	38.4957	39.3512	40.2066	41.0621	42.7730	44.4839	46.1948
733	.3632	.2186	.0741	.9296	.7850	.6405	.4960	.3514	.2069	.0624	.7733	.4842	.1952
736	.3634	.2189	.0744	.9298	.7853	.6408	.4962	.3517	.2072	.0627	.7736	.4845	.1955
739	.3636	.2191	.0746	.9301	.7856	.6410	.4965	.3520	.2075	.0629	.7739	.4849	.1958
742	.3639	.2194	.0748	.9303	.7858	.6413	.4968	.3523	.2077	.0632	.7742	.4852	.1961
427745	33.3641	34.2196	35.0751	35.9306	36.7861	37.6416	38.4971	39.3525	40.2080	41.0635	42.7745	44.4855	46.1965
748	.3643	.2198	.0753	.9308	.7863	.6418	.4973	.3528	.2083	.0638	.7748	.4858	.1968
751	.3646	.2201	.0756	.9311	.7866	.6421	.4976	.3531	.2086	.0641	.7751	.4861	.1971
754	.3648	.2203	.0758	.9313	.7868	.6424	.4979	.3534	.2089	.0644	.7754	.4864	.1974
757	.3650	.2206	.0761	.9316	.7871	.6426	.4981	.3536	.2092	.0647	.7757	.4867	.1978
427760	33.3653	34.2208	35.0763	35.9318	36.7874	37.6429	38.4984	39.3539	40.2094	41.0650	42.7760	44.4870	46.1981
763	.3655	.2210	.0766	.9321	.7876	.6431	.4987	.3542	.2097	.0652	.7763	.4874	.1984
766	.3657	.2213	.0768	.9323	.7879	.6434	.4989	.3545	.2100	.0655	.7766	.4877	.1987
769	.3660	.2215	.0771	.9326	.7881	.6437	.4992	.3547	.2103	.0658	.7769	.4880	.1991
772	.3662	.2218	.0773	.9328	.7884	.6439	.4995	.3550	.2106	.0661	.7772	.4883	.1994
427775	33.3665	34.2220	35.0776	35.9331	36.7887	37.6442	38.4998	39.3553	40.2109	41.0664	42.7775	44.4886	46.1997
778	.3667	.2222	.0778	.9334	.7889	.6445	.5000	.3556	.2111	.0667	.7778	.4889	.2000
781	.3669	.2225	.0780	.9336	.7892	.6447	.5003	.3559	.2114	.0670	.7781	.4892	.2003
784	.3672	.2227	.0783	.9339	.7894	.6450	.5006	.3561	.2117	.0673	.7784	.4895	.2007
787	.3674	.2230	.0785	.9341	.7897	.6453	.5008	.3564	.2120	.0676	.7787	.4898	.2010
427790	33.3676	34.2232	35.0788	35.9344	36.7899	37.6455	38.5011	39.3567	40.2123	41.0678	42.7790	44.4902	46.2013
793	.3679	.2234	.0790	.9346	.7902	.6458	.5014	.3570	.2125	.0681	.7793	.4905	.2016
796	.3681	.2237	.0793	.9349	.7905	.6460	.5016	.3572	.2128	.0684	.7796	.4908	.2020
799	.3683	.2239	.0795	.9351	.7907	.6463	.5019	.3575	.2131	.0687	.7799	.4911	.2023
802	.3686	.2242	.0798	.9354	.7910	.6466	.5022	.3578	.2134	.0690	.7802	.4914	.2026
427805	33.3688	34.2244	35.0800	35.9356	36.7912	37.6468	38.5025	39.3581	40.2137	41.0693	42.7805	44.4917	46.2029
808	.3690	.2246	.0803	.9359	.7915	.6471	.5027	.3583	.2140	.0696	.7808	.4920	.2033
811	.3693	.2249	.0805	.9361	.7917	.6474	.5030	.3586	.2142	.0699	.7811	.4923	.2036
814	.3695	.2251	.0807	.9364	.7920	.6476	.5033	.3589	.2145	.0701	.7814	.4927	.2039
817	.3697	.2254	.0810	.9366	.7923	.6479	.5035	.3592	.2148	.0704	.7817	.4930	.2042
427820	33.3700	34.2256	35.0812	35.9369	36.7925	37.6482	38.5038	39.3594	40.2151	41.0707	42.7820	44.4933	46.2046
823	.3702	.2258	.0815	.9371	.7928	.6484	.5041	.3597	.2154	.0710	.7823	.4936	.2049
826	.3704	.2261	.0817	.9374	.7930	.6487	.5043	.3600	.2156	.0713	.7826	.4939	.2052
829	.3707	.2263	.0820	.9376	.7933	.6490	.5046	.3603	.2159	.0716	.7829	.4942	.2055
832	.3709	.2266	.0822	.9379	.7936	.6492	.5049	.3605	.2162	.0719	.7832	.4945	.2059
427835	33.3711	34.2268	35.0825	35.9381	36.7938	37.6495	38.5052	39.3608	40.2165	41.0722	42.7835	44.4948	46.2062
838	.3714	.2270	.0827	.9384	.7941	.6497	.5054	.3611	.2168	.0724	.7838	.4952	.2065
841	.3716	.2273	.0830	.9386	.7943	.6500	.5057	.3614	.2171	.0727	.7841	.4955	.2068
844	.3718	.2275	.0832	.9389	.7946	.6503	.5060	.3616	.2173	.0730	.7844	.4958	.2072
847	.3721	.2278	.0835	.9391	.7948	.6505	.5062	.3619	.2176	.0733	.7847	.4961	.2075
427850	33.3723	34.2280	35.0837	35.9394	36.7951	37.6508	38.5065	39.3622	40.2179	41.0736	42.7850	44.4964	46.2078
853	.3725	.2282	.0839	.9397	.7954	.6511	.5068	.3625	.2182	.0739	.7853	.4967	.2081
856	.3728	.2285	.0842	.9399	.7956	.6513	.5070	.3628	.2185	.0742	.7856	.4970	.2084
859	.3730	.2287	.0844	.9402	.7959	.6516	.5073	.3630	.2187	.0745	.7859	.4973	.2088
862	.3732	.2290	.0847	.9404	.7961	.6519	.5076	.3633	.2190	.0748	.7862	.4976	.2091
427865	33.3735	34.2292	35.0849	35.9407	36.7964	37.6521	38.5079	39.3636	40.2193	41.0750	42.7865	44.4980	46.2094
868	.3737	.2294	.0852	.9409	.7966	.6524	.5081	.3639	.2196	.0753	.7868	.4983	.2097
871	.3739	.2297	.0854	.9412	.7969	.6526	.5084	.3641	.2199	.0756	.7871	.4986	.2101
874	.3742	.2299	.0857	.9414	.7972	.6529	.5087	.3644	.2202	.0759	.7874	.4989	.2104
877	.3744	.2302	.0859	.9417	.7974	.6532	.5089	.3647	.2204	.0762	.7877	.4992	.2107
427880	33.3746	34.2304	35.0862	35.9419	36.7977	37.6534	38.5092	39.3650	40.2207	41.0765	42.7880	44.4995	46.2110
883	.3749	.2306	.0864	.9422	.7979	.6537	.5095	.3652	.2210	.0768	.7883	.4998	.2114
886	.3751	.2309	.0867	.9424	.7982	.6540	.5097	.3655	.2213	.0771	.7886	.5001	.2117
889	.3753	.2311	.0869	.9427	.7985	.6542	.5100	.3658	.2216	.0773	.7889	.5005	.2120
892	.3756	.2314	.0871	.9429	.7987	.6545	.5103	.3661	.2218	.0776	.7892	.5008	.2123
427895	33.3758	34.2316	35.0874	35.9432	36.7990	37.6548	38.5106	39.3663	40.2221	41.0779	42.7895	44.5011	46.2127
898	.3760	.2318	.0876	.9434	.7992	.6550	.5108	.3666	.2224	.0782	.7898	.5014	.2130
901	.3763	.2321	.0879	.9437	.7995	.6553	.5111	.3669	.2227	.0785	.7901	.5017	.2133
904	.3765	.2323	.0881	.9439	.7997	.6556	.5114	.3672	.2230	.0788	.7904	.5020	.2136
907	.3767	.2326	.0884	.9442	.8000	.6558	.5116	.3674	.2233	.0791	.7907	.5023	.2140
427910	33.3770	34.2328	35.0886	35.9444	36.8003	37.6561	38.5119	39.3677	40.2235	41.0794	42.7910	44.5026	46.2143
913	.3772	.2330	.0889	.9447	.8005	.6563	.5122	.3680	.2238	.0796	.7913	.5030	.2146
916	.3774	.2333	.0891	.9449	.8008	.6566	.5124	.3683	.2241	.0799	.7916	.5033	.2149
919	.3777	.2335	.0894	.9452	.8010	.6569	.5127	.3685	.2244	.0802	.7919	.5036	.2153
922	.3779	.2338	.0896	.9454	.8013	.6571	.5130	.3688	.2247	.0805	.7922	.5039	.2156
427925	33.3782	34.2340	35.0899	35.9457	36.8016	37.6574	38.5133	39.3691	40.2250	41.0808	42.7925	44.5042	46.2159
928	.3784	.2342	.0901	.9460	.8018	.6577	.5135	.3694	.2252	.0811	.7928	.5045	.2162
931	.3786	.2345	.0903	.9462	.8021	.6579	.5138	.3697	.2255	.0814	.7931	.5048	.2165
934	.3789	.2347	.0906	.9465	.8023	.6582	.5141	.3699	.2258	.0817	.7934	.5051	.2169
937	.3791	.2350	.0908	.9467	.8026	.6585	.5143	.3702	.2261	.0820	.7937	.5054	.2172
427940	33.3793	34.2352	35.0911	35.9470	36.8028	37.6587	38.5146	39.3705	40.2264	41.0822	42.7940	44.5058	46.2175
943	.3796	.2354	.0913	.9472	.8031	.6590	.5149	.3708	.2266	.0825	.7943	.5061	.2178
946	.3798	.2357	.0916	.9475	.8034	.6592	.5151	.3710	.2269	.0828	.7946	.5064	.2182
949	.3800	.2359	.0918	.9477	.8036	.6595	.5154	.3713	.2272	.0831	.7949	.5067	.2185
952	.3803	.2362	.0921	.9480	.8039	.6598	.5157	.3716	.2275	.0834	.7952	.5070	.2188
427955	33.3805	34.2364	35.0923	35.9482	36.8041	37.6600	38.5160	39.3719	40.2278	41.0837	42.7955	44.5073	46.2191
958	.3807	.2366	.0926	.9485	.8044	.6603	.5162	.3721	.2281	.0840	.7958	.5076	.2195
961	.3810	.2369	.0928	.9487	.8046	.6606	.5165	.3724	.2283	.0843	.7961	.5079	.2198
964	.3812	.2371	.0930	.9490	.8049	.6608	.5168	.3727	.2286	.0845	.7964	.5083	.2201
967	.3814	.2374	.0933	.9492	.8052	.6611	.5170	.3730	.2289	.0848	.7967	.5086	.2204
427970	33.3817	34.2376	35.0935	35.9495	36.8054	37.6614	38.5173	39.3732	40.2292	41.0851	42.7970	44.5089	46.2208
973	.3819	.2378	.0938	.9497	.8057	.6616	.5176	.3735	.2295	.0854	.7973	.5092	.2211
976	.3821	.2381	.0940	.9500	.8059	.6619	.5178	.3738	.2297	.0857	.7976	.5095	.2214
979	.3824	.2383	.0943	.9502	.8062	.6622	.5181	.3741	.2300	.0860	.7979	.5098	.2217
982	.3826	.2386	.0945	.9505	.8065	.6624	.5184	.3743	.2303	.0863	.7982	.5101	.2221
427985	33.3828	34.2388	35.0948	35.9507	36.8067	37.6627	38.5187	39.3746	40.2306	41.0866	42.7985	44.5104	46.2224
988	.3831	.2390	.0950	.9510	.8070	.6629	.5189	.3749	.2309	.0868	.7988	.5108	.2227
991	.3833	.2393	.0953	.9512	.8072	.6632	.5192	.3752	.2312	.0871	.7991	.5111	.2230
994	.3835	.2395	.0955	.9515	.8075	.6635	.5195	.3754	.2314	.0874	.7994	.5114	.2234
997	.3838	.2398	.0958	.9517	.8077	.6637	.5197	.3757	.2317	.0877	.7997	.5117	.2237
428000	33.3840	34.2400	35.0960	35.9520	36.8080	37.6640	38.5200	39.3760	40.2320	41.0880	42.8000	44.5120	46.2240

H A R M O N I C S

BASIC FREQ.	52	54	56	58	60	62	64	66	68	70	72	74	76
428000	22.2560	23.1120	23.9680	24.8240	25.6800	26.5360	27.3920	28.2480	29.1040	29.9600	30.8160	31.6720	32.5280
003	.2562	.1122	.9682	.8242	.6802	.5362	.3922	.2482	.1042	.9602	.8162	.6722	.5282
006	.2563	.1123	.9683	.8243	.6804	.5364	.3924	.2484	.1044	.9604	.8164	.6724	.5285
009	.2565	.1125	.9685	.8245	.6805	.5366	.3926	.2486	.1046	.9606	.8166	.6727	.5287
012	.2566	.1126	.9687	.8247	.6807	.5367	.3928	.2488	.1048	.9608	.8169	.6729	.5289
428015	22.2568	23.1128	23.9688	24.8249	25.6809	26.5369	27.3930	28.2490	29.1050	29.9611	30.8171	31.6731	32.5291
018	.2569	.1130	.9690	.8250	.6811	.5371	.3932	.2492	.1052	.9613	.8173	.6733	.5294
021	.2571	.1131	.9692	.8252	.6813	.5373	.3933	.2494	.1054	.9615	.8175	.6736	.5296
024	.2572	.1133	.9693	.8254	.6814	.5375	.3935	.2496	.1056	.9617	.8177	.6738	.5298
027	.2574	.1135	.9695	.8256	.6816	.5377	.3937	.2498	.1058	.9619	.8179	.6740	.5301
428030	22.2576	23.1136	23.9697	24.8257	25.6818	26.5379	27.3939	28.2500	29.1060	29.9621	30.8182	31.6742	32.5303
033	.2577	.1138	.9698	.8259	.6820	.5380	.3941	.2502	.1062	.9623	.8184	.6744	.5305
036	.2579	.1139	.9700	.8261	.6822	.5382	.3943	.2504	.1064	.9625	.8186	.6747	.5307
039	.2580	.1141	.9702	.8263	.6823	.5384	.3945	.2506	.1067	.9627	.8188	.6749	.5310
042	.2582	.1143	.9704	.8264	.6825	.5386	.3947	.2508	.1069	.9629	.8190	.6751	.5312
428045	22.2583	23.1144	23.9705	24.8266	25.6827	26.5388	27.3949	28.2510	29.1071	29.9632	30.8192	31.6753	32.5314
048	.2585	.1146	.9707	.8268	.6829	.5390	.3951	.2512	.1073	.9634	.8195	.6756	.5316
051	.2587	.1148	.9709	.8270	.6831	.5392	.3953	.2514	.1075	.9636	.8197	.6758	.5319
054	.2588	.1149	.9710	.8271	.6832	.5393	.3955	.2516	.1077	.9638	.8199	.6760	.5321
057	.2590	.1151	.9712	.8273	.6834	.5395	.3956	.2518	.1079	.9640	.8201	.6762	.5323
428060	22.2591	23.1152	23.9714	24.8275	25.6836	26.5397	27.3958	28.2520	29.1081	29.9642	30.8203	31.6764	32.5326
063	.2593	.1154	.9715	.8277	.6838	.5399	.3960	.2522	.1083	.9644	.8205	.6767	.5328
066	.2594	.1156	.9717	.8278	.6840	.5401	.3962	.2524	.1085	.9646	.8208	.6769	.5330
069	.2596	.1157	.9719	.8280	.6841	.5403	.3964	.2526	.1087	.9648	.8210	.6771	.5332
072	.2597	.1159	.9720	.8282	.6843	.5405	.3966	.2528	.1089	.9650	.8212	.6773	.5335
428075	22.2599	23.1161	23.9722	24.8284	25.6845	26.5407	27.3968	28.2530	29.1091	29.9653	30.8214	31.6776	32.5337
078	.2601	.1162	.9724	.8285	.6847	.5408	.3970	.2531	.1093	.9655	.8216	.6778	.5339
081	.2602	.1164	.9725	.8287	.6849	.5410	.3972	.2533	.1095	.9657	.8218	.6780	.5342
084	.2604	.1165	.9727	.8289	.6850	.5412	.3974	.2535	.1097	.9659	.8220	.6782	.5344
087	.2605	.1167	.9729	.8290	.6852	.5414	.3976	.2537	.1099	.9661	.8223	.6784	.5346
428090	22.2607	23.1169	23.9730	24.8292	25.6854	26.5416	27.3978	28.2539	29.1101	29.9663	30.8225	31.6787	32.5348
093	.2608	.1170	.9732	.8294	.6856	.5418	.3980	.2541	.1103	.9665	.8227	.6789	.5351
096	.2610	.1172	.9734	.8296	.6858	.5420	.3981	.2543	.1105	.9667	.8229	.6791	.5353
099	.2611	.1173	.9735	.8297	.6859	.5421	.3983	.2545	.1107	.9669	.8231	.6793	.5355
102	.2613	.1175	.9737	.8299	.6861	.5423	.3985	.2547	.1109	.9671	.8233	.6795	.5358
428105	22.2615	23.1177	23.9739	24.8301	25.6863	26.5425	27.3987	28.2549	29.1111	29.9674	30.8236	31.6798	32.5360
108	.2616	.1178	.9740	.8303	.6865	.5427	.3989	.2551	.1113	.9676	.8238	.6800	.5362
111	.2618	.1180	.9742	.8304	.6867	.5429	.3991	.2553	.1115	.9678	.8240	.6802	.5364
114	.2619	.1182	.9744	.8306	.6868	.5431	.3993	.2555	.1118	.9680	.8242	.6804	.5367
117	.2621	.1183	.9746	.8308	.6870	.5433	.3995	.2557	.1120	.9682	.8244	.6807	.5369
428120	22.2622	23.1185	23.9747	24.8310	25.6872	26.5434	27.3997	28.2559	29.1122	29.9684	30.8246	31.6809	32.5371
123	.2624	.1186	.9749	.8311	.6874	.5436	.3999	.2561	.1124	.9686	.8249	.6811	.5373
126	.2626	.1188	.9751	.8313	.6876	.5438	.4001	.2563	.1126	.9688	.8251	.6813	.5376
129	.2627	.1190	.9752	.8315	.6877	.5440	.4003	.2565	.1128	.9690	.8253	.6815	.5378
132	.2629	.1191	.9754	.8317	.6879	.5442	.4004	.2567	.1130	.9692	.8255	.6818	.5380
428135	22.2630	23.1193	23.9756	24.8318	25.6881	26.5444	27.4006	28.2569	29.1132	29.9695	30.8257	31.6820	32.5383
138	.2632	.1195	.9757	.8320	.6883	.5446	.4008	.2571	.1134	.9697	.8259	.6822	.5385
141	.2633	.1196	.9759	.8322	.6885	.5447	.4010	.2573	.1136	.9699	.8262	.6824	.5387
144	.2635	.1198	.9761	.8324	.6886	.5449	.4012	.2575	.1138	.9701	.8264	.6827	.5389
147	.2636	.1199	.9762	.8325	.6888	.5451	.4014	.2577	.1140	.9703	.8266	.6829	.5392
428150	22.2638	23.1201	23.9764	24.8327	25.6890	26.5453	27.4016	28.2579	29.1142	29.9705	30.8268	31.6831	32.5394
153	.2640	.1203	.9766	.8329	.6892	.5455	.4018	.2581	.1144	.9707	.8270	.6833	.5396
156	.2641	.1204	.9767	.8330	.6894	.5457	.4020	.2583	.1146	.9709	.8272	.6835	.5399
159	.2643	.1206	.9769	.8332	.6895	.5459	.4022	.2585	.1148	.9711	.8274	.6838	.5401
162	.2644	.1207	.9771	.8334	.6897	.5460	.4024	.2587	.1150	.9713	.8277	.6840	.5403
428165	22.2646	23.1209	23.9772	24.8336	25.6899	26.5462	27.4026	28.2589	29.1152	29.9716	30.8279	31.6842	32.5405
168	.2647	.1211	.9774	.8337	.6901	.5464	.4028	.2591	.1154	.9718	.8281	.6844	.5408
171	.2649	.1212	.9776	.8339	.6903	.5466	.4029	.2593	.1156	.9720	.8283	.6847	.5410
174	.2650	.1214	.9777	.8341	.6904	.5468	.4031	.2595	.1158	.9722	.8285	.6849	.5412
177	.2652	.1216	.9779	.8343	.6906	.5470	.4033	.2597	.1160	.9724	.8287	.6851	.5415
428180	22.2654	23.1217	23.9781	24.8344	25.6908	26.5472	27.4035	28.2599	29.1162	29.9726	30.8290	31.6853	32.5417
183	.2655	,1219	.9782	.8346	.6910	.5473	.4037	.2601	.1164	.9728	.8292	.6855	.5419
186	.2657	.1220	.9784	.8348	.6912	.5475	.4039	.2603	.1166	.9730	.8294	.6858	.5421
189	.2658	.1222	.9786	.8350	.6913	.5477	.4041	.2605	.1169	.9732	.8296	.6860	.5424
192	.2660	.1224	.9788	.8351	.6915	.5479	.4043	.2607	.1171	.9734	.8298	.6862	.5426
428195	22.2661	23.1225	23.9789	24.8353	25.6917	26.5481	27.4045	28.2609	29.1173	29.9737	30.8300	31.6864	32.5428
198	.2663	.1227	.9791	.8355	.6919	.5483	.4047	.2611	.1175	.9739	.8303	.6867	.5430
201	.2665	.1229	.9793	.8357	.6921	.5485	.4049	.2613	.1177	.9741	.8305	.6869	.5433
204	.2666	.1230	.9794	.8358	.6922	.5486	.4051	.2615	.1179	.9743	.8307	.6871	.5435
207	.2668	.1232	.9796	8360	.6924	.5488	.4052	.2617	.1181	.9745	.8309	.6873	.5437
428210	22.2669	23.1233	23.9798	24.8362	25.6926	26.5490	27.4054	28.2619	29.1183	29.9747	30.8311	31.6875	32.5440
213	.2671	.1235	.9799	.8364	.6928	.5492	.4056	.2621	.1185	.9749	.8313	.6878	.5442
216	.2672	.1237	.9801	.8365	.6930	.5494	.4058	.2623	.1187	.9751	.8316	.6880	.5444
219	.2674	.1238	.9803	.8367	.6931	.5496	.4060	.2625	.1189	.9753	.8318	.6882	.5446
222	.2675	.1240	.9804	.8369	.6933	.5498	.4062	.2627	.1191	.9755	.8320	.6884	.5449
428225	22.2677	23.1242	23.9806	24.8371	25.6935	26.5500	27.4064	28.2629	29.1193	29.9758	30.8322	31.6887	32.5451
228	.2679	.1243	.9808	.8372	.6937	.5501	.4066	.2630	.1195	.9760	.8324	.6889	.5453
231	.2680	.1245	.9809	.8374	.6939	.5503	.4068	.2632	.1197	.9762	.8326	.6891	.5456
234	.2682	.1246	.9811	.8376	.6940	.5505	.4070	.2634	.1199	.9764	.8328	.6893	.5458
237	.2683	.1248	.9813	.8377	.6942	.5507	.4072	.2636	.1201	.9766	.8331	.6895	.5460
428240	22.2685	23.1250	23.9814	24.8379	25.6944	26.5509	27.4074	28.2638	29.1203	29.9768	30.8333	31.6898	32.5462
243	.2686	.1251	.9816	.8381	.6946	.5511	.4076	.2640	.1205	.9770	.8335	.6900	.5465
246	.2688	.1253	.9818	.8383	.6948	.5513	.4077	.2642	.1207	.9772	.8337	.6902	.5467
249	.2689	.1254	.9819	.8384	.6949	.5514	.4079	.2644	.1209	.9774	.8339	.6904	.5469
252	.2691	.1256	.9821	.8386	.6951	.5516	.4081	.2646	.1211	.9776	.8341	.6906	.5472
428255	22.2693	23.1258	23.9823	24.8388	25.6953	26.5518	27.4083	28.2648	29.1213	29.9779	30.8344	31.6909	32.5474
258	.2694	.1259	.9824	.8390	.6955	.5520	.4085	.2650	.1215	.9781	.8346	.6911	.5476
261	.2696	.1261	.9826	.8391	.6957	.5522	.4087	.2652	.1217	.9783	.8348	.6913	.5478
264	.2697	.1263	.9828	.8393	.6958	.5524	.4089	.2654	.1220	.9785	.8350	.6915	.5481
267	.2699	.1264	.9830	.8395	.6960	.5526	.4091	.2656	.1222	.9787	.8352	.6918	.5483
428270	22.2700	23.1266	23.9831	24.8397	25.6962	26.5527	27.4093	28.2658	29.1224	29.9789	30.8354	31.6920	32.5485
273	.2702	.1267	.9833	.8398	.6964	.5529	.4095	.2660	.1226	.9791	.8357	.6922	.5487
276	.2704	.1269	.9835	.8400	.6966	.5531	.4097	.2662	.1228	.9793	.8359	.6924	.5490
279	.2705	.1271	.9836	.8402	.6967	.5533	.4099	.2664	.1230	.9795	.8361	.6926	.5492
282	.2707	.1272	.9838	.8404	.6969	.5535	.4100	.2666	.1232	.9797	.8363	.6929	.5494
428285	22.2708	23.1274	23.9840	24.8405	25.6971	26.5537	27.4102	28.2668	29.1234	29.9800	30.8365	31.6931	32.5497
288	.2710	.1276	.9841	.8407	.6973	.5539	.4104	.2670	.1236	.9802	.8367	.6933	.5499
291	.2711	.1277	.9843	.8409	.6975	.5540	.4106	.2672	.1238	.9804	.8370	.6935	.5501
294	.2713	.1279	.9845	.8411	.6976	.5542	.4108	.2674	.1240	.9806	.8372	.6938	.5503
297	.2714	.1280	.9846	.8412	.6978	.5544	.4110	.2676	.1242	.9808	.8374	.6940	.5506
428300	22.2716	23.1282	23.9848	24.8414	25.6980	26.5546	27.4112	28.2678	29.1244	29.9810	30.8376	31.6942	32.5508

MEGACYCLES PER SECOND

HARMONICS

BASIC FREQ.	78	80	82	84	86	88	90	92	94	96	100	104	108
428000	33.3840	34.2400	35.0960	35.9520	36.8080	37.6640	38.5200	39.3760	40.2320	41.0880	42.8000	44.5120	46.2240
003	.3842	.2402	.0962	.9523	.8083	.6643	.5203	.3763	.2323	.0883	.8003	.5123	.2243
006	.3845	.2405	.0965	.9525	.8085	.6645	.5205	.3766	.2326	.0886	.8006	.5126	.2246
009	.3847	.2407	.0967	.9528	.8088	.6648	.5208	.3768	.2328	.0889	.8009	.5129	.2250
012	.3849	.2410	.0970	.9530	.8090	.6651	.5211	.3771	.2331	.0982	.8012	.5132	.2253
428015	33.3852	34.2412	35.0972	35.9533	36.8093	37.6653	38.5214	39.3774	40.2334	41.0894	42.8015	44.5136	46.2256
018	.3854	.2414	.0975	.9535	.8095	.6656	.5216	.3777	.2337	.0897	.8018	.5139	.2259
021	.3856	.2417	.0977	.9538	.8098	.6658	.5219	.3779	.2340	.0900	.8021	.5142	.2263
024	.3859	.2419	.0980	.9540	.8101	.6661	.5222	.3782	.2343	.0903	.8024	.5145	.2266
027	.3861	.2422	.0982	.9543	.8103	.6664	.5224	.3785	.2345	.0906	.8027	.5148	.2269
428030	33.3863	34.2424	35.0985	35.9545	36.8106	37.6666	38.5227	39.3788	40.2348	41.0909	42.8030	44.5151	46.2272
033	.3866	.2426	.0987	.9548	.8108	.6669	.5230	.3790	.2351	.0912	.8033	.5154	.2276
036	.3868	.2429	.0990	.9550	.8111	.6672	.5232	.3793	.2354	.0915	.8036	.5157	.2279
039	.3870	.2431	.0992	.9553	.8114	.6674	.5235	.3796	.2357	.0917	.8039	.5161	.2282
042	.3873	.2434	.0994	.9555	.8116	.6677	.5238	.3799	.2359	.0920	.8042	.5164	.2285
428045	33.3875	34.2436	35.0997	35.9558	36.8119	37.6680	38.5241	39.3801	40.2362	41.0923	42.8045	44.5167	46.2289
048	.3877	.2438	.0999	.9560	.8121	.6682	.5243	.3804	.2365	.0926	.8048	.5170	.2292
051	.3880	.2441	.1002	.9563	.8124	.6685	.5246	.3807	.2368	.0929	.8051	.5173	.2295
054	.3882	.2443	.1004	.9565	.8126	.6688	.5249	.3810	.2371	.0932	.8054	.5176	.2298
057	.3884	.2446	.1007	.9568	.8129	.6690	.5251	.3812	.2374	.0935	.8057	.5179	.2302
428060	33.3887	34.2448	35.1009	35.9570	36.8132	37.6693	38.5254	39.3815	40.2376	41.0938	42.8060	44.5182	46.2305
063	.3889	.2450	.1012	.9573	.8134	.6695	.5257	.3818	.2379	.0940	.8063	.5186	.2308
066	.3891	.2453	.1014	.9575	.8137	.6698	.5259	.3821	.2382	.0943	.8066	.5189	.2311
069	.3894	.2455	.1017	.9578	.8139	.6701	.5262	.3823	.2385	.0946	.8069	.5192	.2315
072	.3896	.2458	.1019	.9580	.8142	6703	.5265	.3826	.2388	.0949	.8072	.5195	.2318
428075	33.3899	34.2460	35.1022	35.9583	36.8145	37.6706	38.5268	39.3829	40.2391	41.0952	42.8075	44.5198	46.2321
078	.3901	.2462	.1024	.9586	.8147	.6709	.5270	.3832	.2393	.0955	.8078	.4201	.2324
081	.3903	.2465	.1026	.9588	.8150	.6711	.5273	.3835	.2396	.0958	.8081	.5204	.2327
084	.3906	.2467	.1029	.9591	.8152	.6714	.5276	.3837	.2399	.0961	.8084	.5207	.2331
087	.3908	.2470	.1031	.9593	.8155	.6717	.5278	.3840	.2402	.0964	.8087	.5210	.2334
428090	33.3910	34.2472	35.1034	35.9596	36.8157	37.6719	38.5281	39.3843	40.2405	41.0966	42.8090	44.5214	46.2337
093	.3913	.2474	.1036	.9598	.8160	.6722	.5284	.3846	.2407	.0969	.8093	.5217	.2340
096	.3915	.2477	.1039	.9601	.8163	.6724	.5286	.3848	.2410	.0972	.8096	.5220	.2344
099	.3917	.2479	.1041	.9603	.8165	.6727	.5289	.3851	.2413	.0975	.8099	.5223	.2347
102	.3920	.2482	.1044	.9606	.8168	.6730	.5292	.3854	2416	.0978	.8102	.5226	.2350
428105	33.3922	34.2484	35.1046	35.9608	36.8170	37.6732	38.5295	39.3857	40.2419	41.0981	42.8105	44.5229	46.2353
108	.3924	.2486	.1049	.9611	.8173	.6735	.5297	.3859	2422	.0984	.8108	.5232	.2357
111	.3927	.2489	.1051	.9613	.8175	.6738	.5300	.3862	.2424	.0987	.8111	.5235	.2360
114	.3929	.2491	.1053	.9616	.8178	.6740	.5303	.3865	.2427	.0989	.8114	.5239	.2363
117	.3931	.2494	.1056	.9618	.8181	.6743	.5305	.3868	.2430	.0992	.8117	.5242	.2366
428120	33.3934	34.2496	35.1058	35.9621	36.8183	37.6746	38.5308	39.3870	40.2433	41.0995	42.8120	44.5245	46.2370
123	.3936	.2498	.1061	.9623	.8186	.6748	.5311	.3873	.2436	.0998	.8123	.5248	.2373
126	.3938	.2501	.1063	.9626	.8188	.6751	.5313	.3876	.2438	.1001	.8126	.5251	.2376
129	.3941	.2503	.1066	.9628	.8191	.6754	.5316	.3879	.2441	.1004	.8129	.5254	.2379
132	.3943	.2506	.1068	.9631	.8194	.6756	.5319	.3881	.2444	.1007	.8132	.5257	.2383
428135	33.3945	34.2508	35.1071	35.9633	36.8196	37.6759	38.5322	39.3884	40.2447	41.1010	42.8135	44.5260	46.2386
138	.3948	.2510	.1073	.9636	.8199	.6761	.5324	.3887	.2450	.1012	.8138	.5264	.2389
141	.3950	.2513	.1076	.9638	.8201	.6764	.5327	.3890	.2453	.1015	.8141	.5267	.2392
144	.3952	.2515	.1078	.9641	.8204	.6767	.5330	.3892	.2455	.1018	.8144	.5270	.2396
147	.3955	.2518	.1081	.9643	.8206	.6769	.5332	.3895	.2458	.1021	.8147	.5273	.2399
428150	33.3957	34.2520	35.1083	35.9646	36.8209	37.6772	38.5335	39.3898	40.2461	41.1024	42.8150	44.5276	46.2402
153	.3959	.2522	.1085	.9649	.8212	.6775	.5338	.3901	.2464	.1027	.8153	.5279	.2405
156	.3962	.2525	.1088	.9651	.8214	.6777	.5340	.3904	.2467	.1030	.8156	.5282	.2408
159	.3964	.2527	.1090	.9654	.8217	.6780	.5343	.3906	.2469	.1033	.8159	.5285	.2412
162	.3966	.2530	.1093	.9656	.8219	.6783	.5346	.3909	.2472	.1036	.8162	.5288	.2415
428165	13.3969	34.2532	35.1095	35.9659	36.8222	37.6785	38.5349	39.3912	40.2475	41.1038	42.8165	44.5292	46.2418
168	.3971	.2534	.1098	.9661	.8224	.6788	.5351	.3915	.2478	.1041	.8168	.5295	.2421
171	.3973	.2537	.1100	.9664	.8227	.6790	.5354	.3917	.2481	.1044	.8171	.5298	.2425
174	.3976	.2539	.1103	.9666	.8230	.6793	.5357	.3920	.2484	.1047	.8174	.5301	.2428
177	.3978	.2542	.1105	.9669	.8232	.6796	.5359	.3923	.2486	.1050	.8177	.5304	.2431
428180	33.3980	34.2544	35.1108	35.9671	36.8235	37.6798	38.5362	39.3926	40.2489	41.1053	42.8180	44.5307	46.2434
183	.3983	.2546	.1110	.9674	.8237	.6801	.5365	.3928	.2492	.1056	.8183	.5310	.2438
186	.3985	.2549	.1113	.9676	.8240	.6804	.5367	.3931	.2495	.1059	.8186	.5313	.2441
189	.3987	.2551	.1115	.9679	.8243	.6806	.5370	.3934	.2498	.1061	.8189	.5317	.2444
192	.3990	.2554	.1117	.9681	.8245	.6809	.5373	.3937	.2500	.1064	.8192	.5320	.2447
428195	33.3992	34.2556	35.1120	35.9684	36.8248	37.6812	38.5376	39.3939	40.2503	41.1067	42.8195	44.5323	46.2451
198	.3994	.2558	.1122	.9686	.8250	.6814	.5378	.3942	.2506	.1070	.8198	.5326	.2454
201	.3997	.2561	.1125	.9689	.8253	.6817	.5381	.3945	.2509	.1073	.8201	.5329	.2457
204	.3999	.2563	.1127	.9691	.8255	.6820	.5384	.3948	.2512	.1076	.8204	.5332	.2460
207	.4001	.2566	.1130	.9694	.8258	.6822	.5386	.3950	.2515	.1079	.8207	.5335	.2464
428210	33.4004	34.2568	35.1132	35.9696	36.8261	37.6825	38.5389	39.3953	40.2517	41.1082	42.8210	44.5338	46.2467
213	.4006	.2570	.1135	.9699	.8263	.6827	.5392	.3956	.2520	.1084	.8213	.5342	.2470
216	.4008	.2573	.1137	.9701	.8266	.6830	.5394	.3959	.2523	.1087	.8216	.5345	.2473
219	.4011	.2575	.1140	.9704	.8268	.6833	.5397	.3961	.2526	.1090	.8219	.5348	.2477
822	.4013	.2578	.1142	.9706	.8271	.6835	.5400	.3964	.2529	.1093	.8222	.5351	.2480
428225	33.4016	34.2580	35.1145	35.9709	36.8274	37.6838	38.5403	39.3967	40.2532	41.1096	42.8225	44.5354	46.2483
228	.4018	.2582	.1147	.9712	.8276	.6841	.5405	.3970	.2534	.1099	.8228	.5357	.2486
231	.4020	.2585	.1149	.9714	.8279	.6843	.5408	.3973	.2537	.1102	.8231	.5360	.2489
234	.4023	.2587	.1152	.9717	.8281	.6846	.5411	.3975	.2540	.1105	.8234	.5363	.2493
237	.4025	.2590	.1154	.9719	.8284	.6849	.5413	.3978	.2543	.1108	.8237	.5366	.2496
428240	33.4027	34.2592	35.1157	35.9722	36.8286	37.6851	38.5416	39.3981	40.2546	41.1110	42.8240	44.5370	46.2499
243	.4030	.2594	.1159	.9724	.8289	.6854	.5419	.3984	.2548	.1113	.8243	.5373	.2502
246	.4032	.2597	.1162	.9727	.8292	.6856	.5421	.3986	.2551	.1116	.8246	.5376	.2506
249	.4034	.2599	.1164	.9729	.8294	.6859	.5424	.3989	.2554	.1119	.8249	.5379	.2509
252	.4037	.2602	.1167	.9732	.8297	.6862	.5427	.3992	.2557	.1122	.8252	.5382	.2512
428255	33.4039	34.2604	35.1169	35.9734	36.8299	37.6864	38.5430	39.3995	40.2560	41.1125	42.8255	44.5385	46.2515
258	.4041	.2606	.1172	.9737	.8302	.6867	.5432	.3997	.2563	.1128	.8258	.5388	.2519
261	.4044	.2609	.1174	.9739	.8304	.6870	.5435	.4000	.2565	.1131	.8261	.5391	.2522
264	.4046	.2611	.1176	.9742	.8307	.6872	.5438	.4003	.2568	.1133	.8264	.5395	.2525
267	.4048	.2614	.1179	.9744	.8310	.6875	.5440	.4006	.2571	.1136	.8267	.5398	.2528
428270	33.4051	34.2616	35.1181	35.9747	36.8312	37.6878	38.5443	39.4008	40.2574	41.1139	42.8270	44.5401	46.2532
273	.4053	.2618	.1184	.9749	.8315	.6880	.5446	.4011	.2577	.1142	.8273	.5404	.2535
276	.4055	.2621	.1186	.9752	.8317	.6883	.5448	.4014	.2579	.1145	.8276	.5407	.2538
279	.4058	.2623	.1189	.9754	.8320	.6886	.5451	.4017	.2582	.1148	.8279	.5410	.2541
282	.4060	.2626	.1191	.9757	.8323	.6888	.5454	.4019	.2585	.1151	.8282	.5413	.2545
428285	33.4062	34.2628	35.1194	35.9759	36.8325	37.6891	38.5457	39.4022	40.2588	41.1154	42.8285	44.5416	46.2548
288	.4065	.2630	.1196	.9762	.8328	.6893	.5459	.4025	.2591	.1156	.8288	.5420	.2551
291	.4067	.2633	.1199	.9764	.8330	.6896	.5462	.4028	.2594	.1159	.8291	.5423	.2554
294	.4069	.2635	.1201	.9767	.8333	.6899	.5465	.4030	.2596	.1162	.8294	.5426	.2558
297	.4072	.2638	.1204	.9769	.8335	.6901	.5467	.4033	.2599	.1165	.8297	.5429	.2561
428300	33.4074	34.2640	35.1206	35.9772	36.8338	37.6904	38.5470	39.4036	40.2602	41.1168	42.8300	44.5432	46.2564

MEGACYCLES PER SECOND

H A R M O N I C S

BASIC FREQ.	52	54	56	58	60	62	64	66	68	70	72	74	76
428300	22.2716	23.1282	23.9848	24.8414	25.6980	26.5546	27.4112	28.2678	29.1244	29.9810	30.8376	31.6942	32.5508
303	.2718	.1284	.9850	.8416	.6982	.5548	.4114	.2680	.1246	.9812	.8378	.6944	.5510
306	.2719	.1285	.9851	.8417	.6984	.5550	.4116	.2682	.1248	.9814	.8380	.6946	.5513
309	.2721	.1287	.9853	.8419	.6985	.5552	.4118	.2684	.1250	.9816	.8382	.6949	.5515
312	.2722	.1288	.9855	.8421	.6987	.5553	.4120	.2686	.1252	.9818	.8385	.6951	.5517
428315	22.2724	23.1290	23.9856	24.8423	25.6989	26.5555	27.4122	28.2688	29.1254	29.9821	30.8387	31.6953	32.5519
318	.2725	.1292	.9858	.8424	.6991	.5557	.4124	.2690	.1256	.9823	.8389	.6955	.5522
321	.2727	.1293	.9860	.8426	.6993	.5559	.4125	.2692	.1258	.9825	.8391	.6958	.5524
324	.2728	.1295	.9861	.8428	.6994	.5561	.4127	.2694	.1260	.9827	.8393	.6960	.5526
327	.2730	.1297	.9863	.8430	.6996	.5563	.4129	.2696	.1262	.9829	.8395	.6962	.5529
428330	22.2732	23.1298	23.9865	24.8431	25.6998	26.5565	27.4131	28.2698	29.1264	29.9831	30.8398	31.6964	32.5531
333	.2733	.1300	.9866	.8433	.7000	.5566	.4133	.2700	.1266	.9833	.8400	.6966	.5533
336	.2735	.1301	.9868	.8435	.7002	.5568	.4135	.2702	.1268	.9835	.8402	.6969	.5535
339	.2736	.1303	.9870	.8437	.7003	.5570	.4137	.2704	.1271	.9837	.8404	.6971	.5538
342	.2738	.1305	.9872	.8438	.7005	.5572	.4139	.2706	.1273	.9839	.8406	.6973	.5540
428345	22.2739	23.1306	23.9873	24.8440	25.7007	26.5574	27.4141	28.2708	29.1275	29.9842	30.8408	31.6975	32.5542
348	.2741	.1308	.9875	.8442	.7009	.5576	.4143	.2710	.1277	.9844	.8411	.6978	.5544
351	.2743	.1310	.9877	.8444	.7011	.5578	.4145	.2712	.1279	.9846	.8413	.6980	.5547
354	.2744	.1311	.9878	.8445	.7012	.5579	.4147	.2714	.1281	.9848	.8415	.6982	.5549
357	.2746	.1313	.9880	.8447	.7014	.5581	.4148	.2716	.1283	.9850	.8417	.6984	.5551
428360	22.2747	23.1314	23.9882	24.8449	25.7016	26.5583	27.4150	28.2718	29.1285	29.9852	30.8419	31.6986	32.5554
363	.2749	.1316	.9883	.8451	.7018	.5585	.4152	.2720	.1287	.9854	.8421	.6989	.5556
366	.2750	.1318	.9885	.8452	.7020	.5587	.4154	.2722	.1289	.9856	.8424	.6991	.5558
369	.2752	.1319	.9887	.8454	.7021	.5589	.4156	.2724	.1291	.9858	.8426	.6993	.5560
372	.2753	.1321	.9888	.8456	.7023	.5591	.4158	.2726	.1293	.9860	.8428	.6995	.5563
428375	22.2755	23.1323	23.9890	24.8458	25.7025	26.5593	27.4160	28.2728	29.1295	29.9863	30.8430	31.6998	32.5565
378	.2757	.1324	.9892	.8459	.7027	.5594	.4162	.2729	.1297	.9865	.8432	.7000	.5567
381	.2758	.1326	.9893	.8461	.7029	.5596	.4164	.2731	.1299	.9867	.8434	.7002	.5570
384	.2760	.1327	.9895	.8463	.7030	.5598	.4166	.2733	.1301	.9869	.8436	.7004	.5572
387	.2761	.1329	.9897	.8464	.7032	.5600	.4168	.2735	.1303	.9871	.8439	.7006	.5574
428390	22.2763	23.1331	23.9898	24.8466	25.7034	26.5602	27.4170	28.2737	29.1305	29.9873	30.8441	31.7009	32.5576
393	.2764	.1332	.9900	.8468	.7036	.5604	.4172	.2739	.1307	.9875	.8443	.7011	.5579
396	.2766	.1334	.9902	.8470	.7038	.5606	.4173	.2741	.1309	.9877	.8445	.7013	.5581
399	.2767	.1335	.9903	.8471	.7039	.5607	.4175	.2743	.1311	.9879	.8447	.7015	.5583
402	.2769	.1337	.9905	.8473	.7041	.5609	.4177	.2745	.1313	.9881	.8449	.7017	.5586
428405	22.2771	23.1339	23.9907	24.8475	25.7043	26.5611	27.4179	28.2747	29.1315	29.9884	30.8452	31.7020	32.5588
408	.2772	.1340	.9908	.8477	.7045	.5613	.4181	.2749	.1317	.9886	.8454	.7022	.5590
411	.2774	.1342	.9910	.8478	.7047	.5615	.4183	.2751	.1319	.9888	.8456	.7024	.5592
414	.2775	.1344	.9912	.8480	.7048	.5617	.4185	.2753	.1322	.9890	.8458	.7026	.5595
417	.2777	.1345	.9914	.8482	.7050	.5619	.4187	.2755	.1324	.9892	.8460	.7029	.5597
428420	22.2778	23.1347	23.9915	24.8484	25.7052	26.5620	27.4189	28.2757	29.1326	29.9894	30.8462	31.7031	32.5599
423	.2780	.1348	.9917	.8485	.7054	.5622	.4191	.2759	.1328	.9896	.8465	.7033	.5601
426	.2782	.1350	.9919	.8487	.7056	.5624	.4193	.2761	.1330	.9898	.8467	.7035	.5604
429	.2783	.1352	.9920	.8489	.7057	.5626	.4195	.2763	.1332	.9900	.8469	.7037	.5606
432	.2785	.1353	.9922	.8491	.7059	.5628	.4196	.2765	.1334	.9902	.8471	.7040	.5608
428435	22.2786	23.1355	23.9924	24.8492	25.7061	26.5630	27.4198	28.2767	29.1336	29.9905	30.8473	31.7042	32.5611
438	.2788	.1357	.9925	.8494	.7063	.5632	.4200	.2769	.1338	.9907	.8475	.7044	.5613
441	.2789	.1358	.9927	.8496	.7065	.5633	.4202	.2771	.1340	.9909	.8478	.7046	.5615
444	.2791	.1360	.9929	.8498	.7066	.5635	.4204	.2773	.1342	.9911	.8480	.7049	.5617
447	.2792	.1361	.9930	.8499	.7068	.5637	.4206	.2775	.1344	.9913	.8482	.7051	.5620
428450	22.2794	23.1363	23.9932	24.8501	25.7070	26.5639	27.4208	28.2777	29.1346	29.9915	30.8484	31.7053	32.5622
453	.2796	.1365	.9934	.8503	.7072	.5641	.4210	.2779	.1348	.9917	.8486	.7055	.5624
456	.2797	.1366	.9935	.8504	.7074	.5643	.4212	.2781	.1350	.9919	.8488	.7057	.5627
459	.2799	.1368	.9937	.8506	.7075	.5645	.4214	.2783	.1352	.9921	.8490	.7060	.5629
462	.2800	.1369	.9939	.8508	.7077	.5646	.4216	.2785	.1354	.9923	.8493	.7062	.5631
428465	22.2802	23.1371	23.9940	24.8510	25.7079	26.5648	27.4218	28.2787	29.1356	29.9926	30.8495	31.7064	32.5633
468	.2803	.1373	.9942	.8511	.7081	.5650	.4220	.2789	.1358	.9928	.8497	.7066	.5636
471	.2805	.1374	.9944	.8513	.7083	.5652	.4221	.2791	.1360	.9930	.8499	.7069	.5638
474	.2806	.1376	.9945	.8515	.7084	.5654	.4223	.2793	.1362	.9932	.8501	.7071	.5640
477	.2808	.1378	.9947	.8517	.7086	.5656	.4225	.2795	.1364	.9934	.8503	.7073	.5643
428480	22.2810	23.1379	23.9949	24.8518	25.7088	26.5658	27.4227	28.2797	29.1366	29.9936	30.8506	31.7075	32.5645
483	.2811	.1381	.9950	.8520	.7090	.5659	.4229	.2799	.1368	.9938	.8508	.7077	.5647
486	.2813	.1382	.9952	.8522	.7092	.5661	.4231	.2801	.1370	.9940	.8510	.7080	.5649
489	.2814	.1384	.9954	.8524	.7093	.5663	.4233	.2803	.1373	.9942	.8512	.7082	.5652
492	.2816	.1386	.9956	.8525	.7095	.5665	.4235	.2805	.1375	.9944	.8514	.7084	.5654
428495	22.2817	23.1387	23.9957	24.8527	25.7097	26.5667	27.4237	28.2807	29.1377	29.9947	30.8516	31.7086	32.5656
498	.2819	.1389	.9959	.8529	.7099	.5669	.4239	.2809	.1379	.9949	.8519	.7089	.5658
501	.2821	.1391	.9961	.8531	.7101	.5671	.4241	.2811	.1381	.9951	.8521	.7091	.5661
504	.2822	.1392	.9962	.8532	.7102	.5672	.4243	.2813	.1383	.9953	.8523	.7093	.5663
507	.2824	.1394	.9964	.8534	.7104	.5674	.4244	.2815	.1385	.9955	.8525	.7095	.5665
428510	22.2825	23.1395	23.9966	24.8536	25.7106	26.5676	27.4246	28.2817	29.1387	29.9957	30.8527	31.7097	32.5668
513	.2827	.1397	.9967	.8538	.7108	.5678	.4248	.2819	.1389	.9959	.8529	.7100	.5670
516	.2828	.1399	.9969	.8539	.7110	.5680	.4250	.2821	.1391	.9961	.8532	.7102	.5672
519	.2830	.1400	.9971	.8541	.7111	.5682	.4252	.2823	.1393	.9963	.8534	.7104	.5674
522	.2831	.1402	.9972	.8543	.7113	.5684	.4254	.2825	.1395	.9965	.8536	.7106	.5677
428525	22.2833	23.1404	23.9974	24.8545	25.7115	26.5686	27.4256	28.2827	29.1397	29.9968	30.8538	31.7109	32.5679
528	.2835	.1405	.9975	.8546	.7117	.5687	.4258	.2828	.1399	.9970	.8540	.7111	.5681
531	.2836	.1407	.9977	.8548	.7119	.5689	.4260	.2830	.1401	.9972	.8542	.7113	.5684
534	.2838	.1408	.9979	.8550	.7120	.5691	.4262	.2832	.1403	.9974	.8544	.7115	.5686
537	.2839	.1410	.9981	.8551	.7122	.5693	.4264	.2834	.1405	.9976	.8547	.7117	.5688
428540	22.2841	23.1412	23.9982	24.8553	25.7124	26.5695	27.4266	28.2836	29.1407	29.9978	30.8549	31.7120	32.5690
543	.2842	.1413	.9984	.8555	.7126	.5697	.4268	.2838	.1409	.9980	.8551	.7122	.5693
546	.2844	.1415	.9986	.8557	.7128	.5699	.4269	.2840	.1411	.9982	.8553	.7124	.5695
549	.2845	.1416	.9987	.8558	.7129	.5700	.4271	.2842	.1413	.9984	.8555	.7126	.5697
552	.2847	.1418	.9989	.8560	.7131	.5702	.4273	.2844	.1415	.9986	.8557	.7128	.5700
428555	22.2849	23.1420	23.9991	24.8562	25.7133	26.5704	27.4275	28.2846	29.1417	29.9989	30.8560	31.7131	32.5702
558	.2850	.1421	.9992	.8564	.7135	.5706	.4277	.2848	.1419	.9991	.8562	.7133	.5704
561	.2852	.1423	.9994	.8565	.7137	.5708	.4279	.2850	.1421	.9993	.8564	.7135	.5706
564	.2853	.1425	.9996	.8567	.7138	.5710	.4281	.2852	.1424	.9995	.8566	.7137	.5709
567	.2855	.1426	.9998	.8569	.7140	.5712	.4283	.2854	.1426	.9997	.8568	.7140	.5711
428570	22.2856	23.1428	23.9999	24.8571	25.7142	26.5713	27.4285	28.2856	29.1428	29.9999	30.8570	31.7142	32.5713
573	.2858	.1429	24.0001	.8572	.7144	.5715	.4287	.2858	.1430	30.0001	.8573	.7144	.5715
576	.2860	.1431	.0003	.8574	.7146	.5717	.4289	.2860	.1432	.0003	.8575	.7146	.5718
579	.2861	.1433	.0004	.8576	.7147	.5719	.4291	.2862	.1434	.0005	.8577	.7148	.5720
582	.2863	.1434	.0006	.8578	.7149	.5721	.4292	.2864	.1436	.0007	.8579	.7151	.5722
428585	22.2864	23.1436	24.0008	24.8579	25.7151	26.5723	27.4294	28.2866	29.1438	30.0010	30.8581	31.7153	32.5725
588	.2866	.1438	.0009	.8581	.7153	.5725	.4296	.2868	.1440	.0012	.8583	.7155	.5727
591	.2867	.1439	.0011	.8583	.7155	.5726	.4298	.2870	.1442	.0014	.8586	.7157	.5729
594	.2869	.1441	.0013	.8585	.7156	.5728	.4300	.2872	.1444	.0016	.8588	.7160	.5731
597	.2870	.1442	.0014	.8586	.7158	.5730	.4302	.2874	.1446	.0018	.8590	.7162	.5734
428600	22.2872	23.1444	24.0016	24.8588	25.7160	26.5732	27.4304	28.2876	29.1448	30.0020	30.8592	31.7164	32.5736

MEGACYCLES PER SECOND

HARMONICS

BASIC FREQ.	78	80	82	84	86	88	90	92	94	96	100	104	108
428300	33.4074	34.2640	35.1206	35.9772	36.8338	37.6904	38.5470	39.4036	40.2602	41.1168	42.8300	44.5432	46.2564
303	.4076	.2642	.1208	.9775	.8341	.6907	.5473	.4039	.2605	.1171	.8303	.5435	.2567
306	.4079	.2645	.1211	.9777	.8343	.6909	.5475	.4042	.2608	.1174	.8306	.5438	.2570
309	.4081	.2647	.1213	.9780	.8346	.6912	.5478	.4044	.2610	.1177	.8309	.5441	.2574
312	.4083	.2650	.1216	.9782	.8348	.6915	.5481	.4047	.2613	.1180	.8312	.5444	.2577
428315	33.4086	34.2652	35.1218	35.9785	36.8351	37.6917	38.5484	39.4050	40.2616	41.1182	42.8315	44.5448	46.2580
318	.4088	.2654	.1221	.9787	.8353	.6920	.5486	.4053	.2619	.1185	.8318	.5451	.2583
321	.4090	.2657	.1223	.9790	.8356	.6922	.5489	.4055	.2622	.1188	.8321	.5454	.2587
324	.4093	.2659	.1226	.9792	.8359	.6925	.5492	.4058	.2625	.1191	.8324	.5457	.2590
327	.4095	.2662	.1228	.9795	.8361	.6928	.5494	.4061	.2627	.1194	.8327	.5460	.2593
428330	33.4097	34.2664	35.1231	35.9797	36.8364	37.6930	38.5497	39.4064	40.2630	41.1197	42.8330	44.5463	46.2596
333	.4100	.2666	.1233	.9800	.8366	.6933	.5500	.4066	.2633	.1200	.8333	.5466	.2600
336	.4102	.2669	.1236	.9802	.8369	.6936	.5502	.4069	.2636	.1203	.8336	.5469	.2603
339	.4104	.2671	.1238	.9805	.8372	.6938	.5505	.4072	.2639	.1205	.8339	.5473	.2606
342	.4107	.2674	.1240	.9807	.8374	.6941	.5508	.4075	.2641	.1208	.8342	.5476	.2609
428345	33.4109	34.2676	35.1243	35.9810	36.8377	37.6944	38.5511	39.4077	40.2644	41.1211	42.8345	44.5479	46.2613
348	.4111	.2678	.1245	.9812	.8379	.6946	.5513	.4080	.2647	.1214	.8348	.5482	.2616
351	.4114	.2681	.1248	.9815	.8382	.6949	.5516	.4083	.2650	.1217	.8351	.5485	.2619
354	.4116	.2683	.1250	.9817	.8384	.6952	.5519	.4086	.2653	.1220	.8354	.5488	.2622
357	.4118	.2686	.1253	.9820	.8387	.6954	.5521	.4088	.2656	.1223	.8357	.5491	.2626
428360	33.4121	34.2688	35.1255	35.9822	36.8390	37.6957	38.5524	39.4091	40.2658	41.1226	42.8360	44.5494	46.2629
363	.4123	.2690	.1258	.9825	.8392	.6959	.5527	.4094	.2661	.1228	.8363	.5498	.2632
366	.4125	.2693	.1260	.9827	.8395	.6962	.5529	.4097	.2664	.1231	.8366	.5501	.2635
369	.4128	.2695	.1263	.9830	.8397	.6965	.5532	.4099	.2667	.1234	.8369	.5504	.2639
372	.4130	.2698	.1265	.9832	.8400	.6967	.5535	.4102	.2670	.1237	.8372	.5507	.2642
428375	33.4133	34.2700	35.1268	35.9835	36.8403	37.6970	38.5538	39.4105	40.2673	41.1240	42.8375	44.5510	46.2645
378	.4135	.2702	.1270	.9838	.8405	.6973	.5540	.4108	.2675	.1243	.8378	.5513	.2648
381	.4137	.2705	.1272	.9840	.8408	.6975	.5543	.4111	.2678	.1246	.8381	.5516	.2651
384	.4140	.2707	.1275	.9843	.8410	.6978	.5546	.4113	.2681	.1249	.8384	.5519	.2655
387	.4142	.2710	.1277	.9845	.8413	.6981	.5548	.4116	.2684	.1252	.8387	.5522	.2658
428390	33.4144	34.2712	35.1280	35.9848	36.8415	37.6983	38.5551	39.4119	40.2687	41.1254	42.8390	44.5526	46.2661
393	.4147	.2714	.1282	.9850	.8418	.6986	.5554	.4122	.2689	.1257	.8393	.5529	.2664
396	.4149	.2717	.1285	.9853	.8421	.6988	.5556	.4124	.2692	.1260	.8396	.5532	.2668
399	.4151	.2719	.1287	.9855	.8423	.6991	.5559	.4127	.2695	.1263	.8399	.5535	.2671
402	.4154	.2722	.1290	.9858	.8426	.6994	.5562	.4130	.2698	.1266	.8402	.5538	.2674
428405	33.4156	34.2724	35.1292	35.9860	36.8428	37.6996	38.5565	39.4133	40.2701	41.1269	42.8405	44.5541	46.2677
408	.4158	.2726	.1295	.9863	.8431	.6999	.5567	.4135	.2704	.1272	.8408	.5544	.2681
411	.4161	.2729	.1297	.9865	.8433	.7002	.5570	.4138	.2706	.1275	.8411	.5547	.2684
414	.4163	.2731	.1299	.9868	.8436	.7004	.5573	.4141	.2709	.1277	.8414	.5551	.2687
417	.4165	.2734	.1302	.9870	.8439	.7007	.5575	.4144	.2712	.1280	.8417	.5554	.2690
428420	33.4168	34.2736	35.1304	35.9873	36.8441	37.7010	38.5578	39.4146	40.2714	41.1283	42.8420	44.5557	46.2694
423	.4170	.2738	.1307	.9875	.8444	.7012	.5581	.4149	.2718	.1286	.8423	.5560	.2697
426	.4172	.2741	.1309	.9878	.8446	.7015	.5583	.4152	.2720	.1289	.8426	.5563	.2700
429	.4175	.2743	.1312	.9880	.8449	.7018	.5586	.4155	.2723	.1292	.8429	.5566	.2703
432	.4177	.2746	.1314	.9883	.8452	.7020	.5589	.4157	.2726	.1295	.8432	.5569	.2707
428435	33.4179	34.2748	35.1317	35.9885	36.8454	37.7023	38.5592	39.4160	40.2729	41.1298	42.8435	44.5572	46.2710
438	.4182	.2750	.1319	.9888	.8457	.7025	.5594	.4163	.2732	.1300	.8438	.5576	.2713
441	.4184	.2753	.1322	.9890	.8459	.7028	.5597	.4166	.2735	.1303	.8441	.5579	.2716
444	.4186	.2755	.1324	.9893	.8462	.7031	.5600	.4168	.2737	.1306	.8444	.5582	.2720
447	.4189	.2758	.1327	.9895	.8464	.7033	.5602	.4171	.2740	.1309	.8447	.5585	.2723
428450	33.4191	34.2760	35.1329	35.9898	36.8467	37.7036	38.5605	39.4174	40.2743	41.1312	42.8450	44.5588	46.2726
453	.4193	.2762	.1331	.9901	.8470	.7039	.5608	.4177	.2746	.1315	.8453	.5591	.2729
456	.4196	.2765	.1334	.9903	.8472	.7041	.5610	.4180	.2749	.1318	.8456	.5594	.2732
459	.4198	.2767	.1336	.9906	.8475	.7044	.5613	.4182	.2751	.1321	.8459	.5597	.2736
462	.4200	.2770	.1339	.9908	.8477	.7047	.5616	.4185	.2754	.1324	.8462	.5600	.2739
428465	33.4203	34.2772	35.1341	35.9911	36.8480	37.7049	38.5619	39.4188	40.2757	41.1326	42.8465	44.5604	46.2742
468	.4205	.2774	.1344	.9913	.8482	.7052	.5621	.4191	.2760	.1329	.8468	.5607	.2745
471	.4207	.2777	.1346	.9916	.8485	.7054	.5624	.4193	.2763	.1332	.8471	.5610	.2749
474	.4210	.2779	.1349	.9918	.8488	.7057	.5627	.4196	.2766	.1335	.8474	.5613	.2752
477	.4212	.2782	.1351	.9921	.8490	.7060	.5629	.4199	.2768	.1338	.8477	.5616	.2755
428480	33.4214	34.2784	35.1354	35.9923	36.8493	37.7062	38.5632	39.4202	40.2771	41.1341	42.8480	44.5619	46.2758
483	.4217	.2786	.1356	.9926	.8495	.7065	.5635	.4204	.2774	.1344	.8483	.5622	.2762
486	.4219	.2789	.1359	.9928	.8498	.7068	.5637	.4207	.2777	.1347	.8486	.5625	.2765
489	.4221	.2791	.1361	.9931	.8501	.7070	.5640	.4210	.2780	.1349	.8489	.5629	.2768
492	.4224	.2794	.1363	.9933	.8503	.7073	.5643	.4213	.2782	.1352	.8492	.5632	.2771
428495	33.4226	34.2796	35.1366	35.9936	36.8506	37.7076	38.5646	39.4215	40.2785	41.1355	42.8495	44.5635	46.2775
498	.4228	.2798	.1368	.9938	.8508	.7078	.5648	.4218	.2788	.1358	.8498	.5638	.2778
501	.4231	.2801	.1371	.9941	.8511	.7081	.5651	.4221	.2791	.1361	.8501	.5641	.2781
504	.4233	.2803	.1373	.9943	.8513	.7084	.5654	.4224	.2794	.1364	.8504	.5644	.2784
507	.4235	.2806	.1376	.9946	.8516	.7086	.5656	.4226	.2797	.1367	.8507	.5647	.2788
428510	33.4238	34.2808	35.1378	35.9948	36.8519	37.7089	38.5659	39.4229	40.2799	41.1370	42.8510	44.5650	46.2791
513	.4240	.2810	.1381	.9951	.8521	.7091	.5662	.4232	.2802	.1372	.8513	.5654	.2794
516	.4242	.2813	.1383	.9953	.8524	.7094	.5664	.4235	.2805	.1375	.8516	.5657	.2797
519	.4245	.2815	.1386	.9956	.8526	.7097	.5667	.4237	.2808	.1378	.8519	.5660	.2801
522	.4247	.2818	.1388	.9958	.8529	.7099	.5670	.4240	.2811	.1381	.8522	.5663	.2804
428525	33.4250	34.2820	35.1391	35.9961	36.8532	37.7102	38.5673	39.4243	40.2814	41.1384	42.8525	44.5666	46.2807
528	.4252	.2822	.1393	.9964	.8534	.7105	.5675	.4246	.2816	.1387	.8528	.5669	.2810
531	.4254	.2825	.1395	.9966	.8537	.7107	.5678	.4249	.2819	.1390	.8531	.5672	.2813
534	.4257	.2827	.1398	.9969	.8539	.7110	.5681	.4251	.2822	.1393	.8534	.5675	.2817
537	.4259	.2830	.1400	.9971	.8542	.7113	.5683	.4254	.2835	.1396	.8537	.5678	.2820
428540	33.4261	34.2832	35.1403	35.9974	36.8544	37.7115	38.5686	39.4257	40.2828	41.1398	42.8540	44.5682	46.2823
543	.4264	.2834	.1405	.9976	.8547	.7118	.5689	.4260	.2830	.1401	.8543	.5685	.2826
546	.4266	.2837	.1408	.9979	.8550	.7120	.5691	.4262	.2833	.1404	.8546	.5688	.2830
549	.4268	.2839	.1410	.9981	.8552	.7123	.5694	.4265	.2836	.1407	.8549	.5691	.2833
552	.4271	.2842	.1413	.9984	.8555	.7126	.5697	.4268	.2839	.1410	.8552	.5694	.2836
428555	33.4273	34.2844	35.1415	35.9986	36.8557	37.7128	38.5700	39.4271	40.2842	41.1413	42.8555	44.5697	46.2839
558	.4275	.2846	.1418	.9989	.8560	.7131	.5702	.4273	.2845	.1416	.8558	.5700	.2843
561	.4278	.2849	.1420	.9991	.8562	.7134	.5705	.4276	.2847	.1419	.8561	.5703	.2846
564	.4280	.2851	.1422	.9994	.8565	.7136	.5708	.4279	.2850	.1421	.8564	.5707	.2849
567	.4282	.2854	.1425	.9996	.8568	.7139	.5710	.4282	.2853	.1424	.8567	.5710	.2852
428570	33.4285	34.2856	35.1427	35.9999	36.8570	37.7142	38.5713	39.4284	40.2856	41.1427	42.8570	44.5713	46.2856
573	.4287	.2858	.1430	36.0001	.8573	.7144	.5716	.4287	.2859	.1430	.8573	.5716	.2859
576	.4289	.2861	.1432	.0004	.8575	.7147	.5718	.4290	.2861	.1433	.8576	.5719	.2862
579	.4292	.2863	.1435	.0006	.8578	.7150	.5721	.4293	.2864	.1436	.8579	.5722	.2865
582	.4294	.2866	.1437	.0009	.8581	.7152	.5724	.4295	.2867	.1439	.8582	.5725	.2869
428585	33.4296	34.2868	35.1440	36.0011	36.8583	37.7155	38.5727	39.4298	40.2870	41.1442	42.8585	44.5728	46.2872
588	.4299	.2870	.1442	.0014	.8586	.7157	.5729	.4301	.2873	.1444	.8588	.5732	.2875
591	.4301	.2873	.1445	.0016	.8588	.7160	.5732	.4304	.2876	.1447	.8591	.5735	.2878
594	.4303	.2875	.1447	.0019	.8591	.7163	.5735	.4306	.2878	.1450	.8594	.5738	.2882
597	.4306	.2878	.1450	.0021	.8593	.7165	.5737	.4309	.2881	.1453	.8597	.5741	.2885
428600	33.4308	34.2880	35.1452	36.0024	36.8596	37.7168	38.5740	39.4312	40.2884	41.1456	42.8600	44.5744	46.2888

HARMONICS

BASIC FREQ.	52	54	56	58	60	62	64	66	68	70	72	74	76
428600	22.2872	23.1444	24.0016	24.8588	25.7160	26.5732	27.4304	28.2876	29.1448	30.0020	30.8592	31.7164	32.5736
603	.2874	.1446	.0018	.8590	.7162	.5734	.4306	.2878	.1450	.0022	.8594	.7166	.5738
606	.2875	.1447	.0019	.8591	.7164	.5736	.4308	.2880	.1452	.0024	.8596	.7168	.5741
609	.2877	.1449	.0021	.8593	.7165	.5738	.4310	.2882	.1454	.0026	.8598	.7171	.5743
612	.2878	.1450	.0023	.8595	.7167	.5739	.4312	.2884	.1456	.0028	.8601	.7173	.5745
428615	22.2880	23.1452	24.0024	24.8597	25.7169	26.5741	27.4314	28.2886	29.1458	30.0031	30.8603	31.7175	32.5747
618	.2881	.1454	.0026	.8598	.7171	.5743	.4316	.2888	.1460	.0033	.8605	.7177	.5750
621	.2883	.1455	.0028	.8600	.7173	.5745	.4317	.2890	.1462	.0035	.8607	.7180	.5752
624	.2884	.1457	.0029	.8602	.7174	.5747	.4319	.2892	.1464	.0037	.8609	.7182	.5754
627	.2886	.1459	.0031	.8604	.7176	.5749	.4321	.2894	.1466	.0039	.8611	.7184	.5757
428630	22.2888	23.1460	24.0033	24.8605	25.7178	26.5751	27.4323	28.2896	29.1468	30.0041	30.8614	31.7186	32.5759
633	.2889	.1462	.0034	.8607	.7180	.5752	.4325	.2898	.1470	.0043	.8616	.7188	.5761
636	.2891	.1463	.0036	.8609	.7182	.5754	.4327	.2900	.1472	.0045	.8618	.7191	.5763
639	.2892	.1465	.0038	.8611	.7183	.5756	.4329	.2902	.1475	.0047	.8620	.7193	.5766
642	.2894	.1467	.0040	.8612	.7185	.5758	.4331	.2904	.1477	.0049	.8622	.7195	.5768
428645	22.2895	23.1468	24.0041	24.8614	25.7187	26.5760	27.4333	28.2906	29.1479	30.0052	30.8624	31.7197	32.5770
648	.2897	.1470	.0043	.8616	.7189	.5762	.4335	.2908	.1481	.0054	.8627	.7200	.5772
651	.2899	.1472	.0045	.8618	.7191	.5764	.4337	.2910	.1483	.0056	.8629	.7202	.5775
654	.2900	.1473	.0046	.8619	.7192	.5765	.4339	.2912	.1485	.0058	.8631	.7204	.5777
657	.2902	.1475	.0048	.8621	.7194	.5767	.4340	.2914	.1487	.0060	.8633	.7206	.5779
428660	22.2903	23.1476	24.0050	24.8623	25.7196	26.5769	27.4342	28.2916	29.1489	30.0062	30.8635	31.7208	32.5782
663	.2905	.1478	.0051	.8625	.7198	.5771	.4344	.2918	.1491	.0064	.8637	.7211	.5784
666	.2906	.1480	.0053	.8626	.7200	.5773	.4346	.2920	.1493	.0066	.8640	.7213	.5786
669	.2908	.1481	.0055	.8628	.7201	.5775	.4348	.2922	.1495	.0068	.8642	.7215	.5788
672	.2909	.1483	.0056	.8630	.7203	.5777	.4350	.2924	.1497	.0070	.8644	.7217	.5791
428675	22.2911	23.1485	24.0058	24.8632	25.7205	26.5779	27.4352	28.2926	29.1499	30.0073	30.8646	31.7220	32.5793
678	.2913	.1486	.0060	.8633	.7207	.5780	.4354	.2927	.1501	.0075	.8648	.7222	.5795
681	.2914	.1488	.0061	.8635	.7209	.5782	.4356	.2929	.1503	.0077	.8650	.7224	.5798
684	.2916	.1489	.0063	.8637	.7210	.5784	.4358	.2931	.1505	.0079	.8652	.7226	.5800
687	.2917	.1491	.0065	.8638	.7212	.5786	.4360	.2933	.1507	.0081	.8655	.7228	.5802
428690	22.2919	23.1493	24.0066	24.8640	25.7214	26.5788	27.4362	28.2935	29.1509	30.0083	30.8657	31.7231	32.5804
693	.2920	.1494	.0068	.8642	.7216	.5790	.4364	.2937	.1511	.0085	.8659	.7233	.5807
696	.2922	.1496	.0070	.8644	.7218	.5792	.4365	.2939	.1513	.0087	.8661	.7235	.5809
699	.2923	.1497	.0071	.8645	.7219	.5793	.4367	.2941	.1515	.0089	.8663	.7237	.5811
702	.2925	.1499	.0073	.8647	.7221	.5795	.4369	.2943	.1517	.0091	.8665	.7239	.5814
428705	22.2927	23.1501	24.0075	24.8649	25.7223	26.5797	27.4371	28.2945	29.1519	30.0094	30.8668	31.7242	32.5816
708	.2928	.1502	.0076	.8651	.7225	.5799	.4373	.2947	.1521	.0096	.8670	.7244	.5818
711	.2930	.1504	.0078	.8652	.7227	.5801	.4375	.2949	.1523	.0098	.8672	.7246	.5820
714	.2931	.1506	.0080	.8654	.7228	.5803	.4377	.2951	.1526	.0100	.8674	.7248	.5823
717	.2933	.1507	.0082	.8656	.7230	.5805	.4379	.2953	.1528	.0102	.8676	.7251	.5825
428720	22.2934	23.1509	24.0083	24.8658	25.7232	26.5806	27.4381	28.2955	29.1530	30.0104	30.8678	31.7253	32.5827
723	.2936	.1510	.0085	.8659	.7234	.5808	.4383	.2957	.1532	.0106	.8681	.7255	.5829
726	.2938	.1512	.0087	.8661	.7236	.5810	.4385	.2959	.1534	.0108	.8683	.7257	.5832
729	.2939	.1514	.0088	.8663	.7237	.5812	.4387	.2961	.1536	.0110	.8685	.7259	.5834
732	.2941	.1515	.0090	.8665	.7239	.5814	.4388	.2963	.1538	.0112	.8687	.7262	.5836
428735	22.2942	23.1517	24.0092	24.8666	25.7241	26.5816	27.4390	28.2965	29.1540	30.0115	30.8689	31.7264	32.5839
738	.2944	.1519	.0093	.8668	.7243	.5818	.4392	.2967	.1542	.0117	.8691	.7266	.5841
741	.2945	.1520	.0095	.8670	.7245	.5819	.4394	.2969	.1544	.0119	.8694	.7268	.5843
744	.2947	.1522	.0097	.8672	.7246	.5821	.4396	.2971	.1546	.0121	.8696	.7271	.5845
747	.2948	.1523	.0098	.8673	.7248	.5823	.4398	.2973	.1548	.0123	.8698	.7273	.5848
428750	22.2950	23.1525	24.0100	24.8675	25.7250	26.5825	27.4400	28.2975	29.1550	30.0125	30.8700	31.7275	32.5850
753	.2952	.1527	.0102	.8677	.7252	.5827	.4402	.2977	.1552	.0127	.8702	.7277	.5852
756	.2953	.1528	.0103	.8678	.7254	.5829	.4404	.2979	.1554	.0129	.8704	.7279	.5855
759	.2955	.1530	.0105	.8680	.7255	.5831	.4406	.2981	.1556	.0131	.8706	.7282	.5857
762	.2956	.1531	.0107	.8682	.7257	.5832	.4408	.2983	.1558	.0133	.8709	.7284	.5859
428765	22.2958	23.1533	24.0108	24.8684	25.7259	26.5834	27.4410	28.2985	29.1560	30.0136	30.8711	31.7286	32.5861
768	.2959	.1535	.0110	.8685	.7261	.5836	.4412	.2987	.1562	.0138	.8713	.7288	.5864
771	.2961	.1536	.0112	.8687	.7263	.5838	.4413	.2989	.1564	.0140	.8715	.7291	.5866
774	.2962	.1538	.0113	.8689	.7264	.5840	.4415	.2991	.1566	.0142	.8717	.7293	.5868
777	.2964	.1540	.0115	.8691	.7266	.5842	.4417	.2993	.1568	.0144	.8719	.7295	.5871
428780	22.2966	23.1541	24.0117	24.8692	25.7268	26.5844	27.4419	28.2995	29.1570	30.0146	30.8722	31.7297	32.5873
783	.2967	.1543	.0118	.8694	.7270	.5845	.4421	.2997	.1572	.0148	.8724	.7299	.5875
786	.2969	.1544	.0120	.8696	.7272	.5847	.4423	.2999	.1574	.0150	.8726	.7302	.5877
789	.2970	.1546	.0122	.8698	.7273	.5849	.4425	.3001	.1577	.0152	.8728	.7304	.5880
792	.2972	.1548	.0124	.8699	.7275	.5851	.4427	.3003	.1579	.0154	.8730	.7306	.5882
428795	22.2973	23.1549	24.0125	24.8701	25.7277	26.5853	27.4429	28.3005	29.1581	30.0157	30.8732	31.7308	32.5884
798	.2975	.1551	.0127	.8703	.7279	.5855	.4431	.3007	.1583	.0159	.8735	.7311	.5886
801	.2977	.1553	.0129	.8705	.7281	.5857	.4433	.3009	.1585	.0161	.8737	.7313	.5889
804	.2978	.1554	.0130	.8706	.7282	.5858	.4435	.3011	.1587	.0163	.8739	.7315	.5891
807	.2980	.1556	.0132	.8708	.7284	.5860	.4436	.3013	.1589	.0165	.8741	.7317	.5893
428810	22.2981	23.1557	24.0134	24.8710	25.7286	26.5862	27.4438	28.3015	29.1591	30.0167	30.8743	31.7319	32.5896
813	.2983	.1559	.0135	.8712	.7288	.5864	.4440	.3017	.1593	.0169	.8745	.7322	.5898
816	.2984	.1561	.0137	.8713	.7290	.5866	.4442	.3019	.1595	.0171	.8748	.7324	.5900
819	.2986	.1562	.0139	.8715	.7291	.5868	.4444	.3021	.1597	.0173	.8750	.7326	.5902
822	.2987	.1564	.0140	.8717	.7293	.5870	.4446	.3023	.1599	.0175	.8752	.7328	.5905
428825	22.2989	23.1566	24.0142	24.8719	25.7295	26.5872	27.4448	28.3025	29.1601	30.0178	30.8754	31.7331	32.5907
828	.2991	.1567	.0144	.8720	.7297	.5873	.4450	.3026	.1603	.0180	.8756	.7333	.5909
831	.2992	.1569	.0145	.8722	.7299	.5875	.4452	.3028	.1605	.0182	.8758	.7335	.5912
834	.2994	.1570	.0147	.8724	.7300	.5877	.4454	.3030	.1607	.0184	.8760	.7337	.5914
837	.2995	.1572	.0149	.8725	.7302	.5879	.4456	.3032	.1609	.0186	.8763	.7339	.5916
428840	22.2997	23.1574	24.0150	24.8727	25.7304	26.5881	27.4458	28.3034	29.1611	30.0188	30.8765	31.7342	32.5918
843	.2998	.1575	.0152	.8729	.7306	.5883	.4460	.3036	.1613	.0190	.8767	.7344	.5921
846	.3000	.1577	.0154	.8731	.7308	.5885	.4461	.3038	.1615	.0192	.8769	.7346	.5923
849	.3001	.1578	.0155	.8732	.7309	.5886	.4463	.3040	.1617	.0194	.8771	.7348	.5925
852	.3003	.1580	.0157	.8734	.7311	.5888	.4465	.3042	.1619	.0196	.8773	.7350	.5928
428855	22.3005	23.1582	24.0159	24.8736	25.7313	26.5890	27.4467	28.3044	29.1621	30.0199	30.8776	31.7353	32.5930
858	.3006	.1583	.0160	.8738	.7315	.5892	.4469	.3046	.1623	.0201	.8778	.7355	.5932
861	.3008	.1585	.0162	.8739	.7317	.5894	.4471	.3048	.1625	.0203	.8780	.7357	.5934
864	.3009	.1587	.0164	.8741	.7318	.5896	.4473	.3050	.1628	.0205	.8782	.7359	.5937
867	.3011	.1588	.0166	.8743	.7320	.5898	.4475	.3052	.1630	.0207	.8784	.7362	.5939
428870	22.3012	23.1590	24.0167	24.8745	25.7322	26.5899	27.4477	28.3054	29.1632	30.0209	30.8786	31.7364	32.5941
873	.3014	.1591	.0169	.8746	.7324	.5901	.4479	.3056	.1634	.0211	.8789	.7366	.5943
876	.3016	.1593	.0171	.8748	.7326	.5903	.4481	.3058	.1636	.0213	.8791	.7368	.5946
879	.3017	.1595	.0172	.8750	.7327	.5905	.4483	.3060	.1638	.0215	.8793	.7370	.5948
882	.3019	.1596	.0174	.8752	.7329	.5907	.4484	.3062	.1640	.0217	.8795	.7373	.5950
428885	22.3020	23.1598	24.0176	24.8753	25.7331	26.5909	27.4486	28.3064	29.1642	30.0220	30.8797	31.7375	32.5953
888	.3022	.1600	.0177	.8755	.7333	.5911	.4488	.3066	.1644	.0222	.8799	.7377	.5955
891	.3023	.1601	.0179	.8757	.7335	.5912	.4490	.3068	.1646	.0224	.8802	.7379	.5957
894	.3025	.1603	.0181	.8759	.7336	.5914	.4492	.3070	.1648	.0226	.8804	.7382	.5959
897	.3026	.1604	.0182	.8760	.7338	.5916	.4494	.3072	.1650	.0228	.8806	.7384	.5962
428900	22.3028	23.1606	24.0184	24.8762	25.7340	26.5918	27.4496	28.3074	29.1652	30.0230	30.8808	31.7386	32.5964

MEGACYCLES PER SECOND

H A R M O N I C S

BASIC FREQ.	78	80	82	84	86	88	90	92	94	96	100	104	108
428600	33.4308	34.2880	35.1452	36.0024	36.8596	37.7168	38.5740	39.4312	40.2884	41.1456	42.8600	44.5744	46.2888
603	.4310	.2882	.1454	.0027	.8599	.7171	.5743	.4315	.2887	.1459	.8603	.5747	.2891
606	.4313	.2885	.1457	.0029	.8601	.7173	.5745	.4318	.2890	.1462	.8606	.5750	.2894
609	.4315	.2887	.1459	.0032	.8604	.7176	.5748	.4320	.2892	.1465	.8609	.5753	.2898
612	.4317	.2890	.1462	.0034	.8606	.7179	.5751	.4323	.2895	.1468	.8612	.5756	.2901
428615	33.4320	34.2892	35.1464	36.0037	36.8609	37.7181	38.5754	39.4326	40.2898	41.1470	42.8615	44.5760	46.2904
618	.4322	.2894	.1467	.0039	.8611	.7184	.5756	.4329	.2901	.1473	.8618	.5763	.2907
621	.4324	.2897	.1469	.0042	.8614	.7186	.5759	.4331	.2904	.1476	.8621	.5766	.2911
624	.4327	.2899	.1472	.0044	.8617	.7189	.5762	.4334	.2907	.1479	.8624	.5769	.2914
627	.4329	.2902	.1474	.0047	.8619	.7192	.5764	.4337	.2909	.1482	.8627	.5772	.2917
428630	33.4331	34.2904	35.1477	36.0049	36.8622	37.7194	38.5767	39.4340	40.2912	41.1485	42.8630	44.5775	46.2920
633	.4334	.2906	.1479	.0052	.8624	.7197	.5770	.4342	.2915	.1488	.8633	.5778	.2924
636	.4336	.2909	.1482	.0054	.8627	.7200	.5772	.4345	.2918	.1491	.8636	.5781	.2927
639	.4338	.2911	.1484	.0057	.8630	.7202	.5775	.4348	.2921	.1493	.8639	.5785	.2930
642	.4341	.2914	.1486	.0059	.8632	.7205	.5778	.4351	.2923	.1496	.8642	.5788	.2933
428645	33.4343	34.2916	35.1489	36.0062	36.8635	37.7208	38.5781	39.4353	40.2926	41.1499	42.8645	44.5791	46.2937
648	.4345	.2918	.1491	.0064	.8637	.7210	.5783	.4356	.2929	.1502	.8648	.5794	.2940
651	.4348	.2921	.1494	.0067	.8640	.7213	.5786	.4359	.2932	.1505	.8651	.5797	.2943
654	.4350	.2923	.1496	.0069	.8642	.7216	.5789	.4362	.2935	.1508	.8654	.5800	.2946
657	.4352	.2926	.1499	.0072	.8645	.7218	.5791	.4364	.2938	.1511	.8657	.5803	.2950
428660	33.4355	34.2928	35.1501	36.0074	36.8648	37.7221	38.5794	39.4367	40.2940	41.1514	42.8660	44.5806	46.2953
663	.4357	.2930	.1504	.0077	.8650	.7223	.5797	.4370	.2943	.1516	.8663	.5810	.2956
666	.4359	.2933	.1506	.0079	.8653	.7226	.5799	.4373	.2946	.1519	.8666	.5813	.2959
669	.4362	.2935	.1509	.0082	.8655	.7229	.5802	.4375	.2949	.1522	.8669	.5816	.2963
672	.4364	.2938	.1511	.0084	.8658	.7231	.5805	.4378	.2952	.1525	.8672	.5819	.2966
428675	33.4367	34.2940	35.1514	36.0087	36.8661	37.7234	38.5808	39.4381	40.2955	41.1528	42.8675	44.5822	46.2969
678	.4369	.2942	.1516	.0090	.8663	.7237	.5810	.4384	.2957	.1531	.8678	.5825	.2972
681	.4371	.2945	.1518	.0092	.8666	.7239	.5813	.4387	.2960	.1534	.8681	.5828	.2975
684	.4374	.2947	.1521	.0095	.8668	.7242	.5816	.4389	.2963	.1537	.8684	.5831	.2979
687	.4376	.2950	.1523	.0097	.8671	.7245	.5818	.4392	.2966	.1540	.8687	.5834	.2982
428690	33.4378	34.2952	35.1526	36.0100	36.8673	37.7247	38.5821	39.4395	40.2969	41.1542	42.8690	44.5838	46.2985
693	.4381	.2954	.1528	.0102	.8676	.7250	.5824	.4398	.2971	.1545	.8693	.5841	.2988
696	.4383	.2957	.1531	.0105	.8679	.7252	.5826	.4400	.2974	.1548	.8696	.5844	.2992
699	.4385	.2959	.1533	.0107	.8681	.7255	.5829	.4403	.2977	.1551	.8699	.5847	.2995
702	.4388	.2962	.1536	.0110	.8684	.7258	.5832	.4406	.2980	.1554	.8702	.5850	.2998
428705	33.4390	34.2964	35.1538	36.0112	36.8686	37.7260	38.5835	39.4409	40.2983	41.1557	42.8705	44.5853	46.3001
708	.4392	.2966	.1541	.0115	.8689	.7263	.5837	.4411	.2986	.1560	.8708	.5856	.3005
711	.4395	.2969	.1543	.0117	.8691	.7266	.5840	.4414	.2988	.1563	.8711	.5859	.3008
714	.4397	.2971	.1545	.0120	.8694	.7268	.5843	.4417	.2991	.1565	.8714	.5863	.3011
717	.4399	.2974	.1548	.0122	.8697	.7271	.5845	.4420	.2994	.1568	.8717	.5866	.3014
428720	33.4402	34.2976	35.1550	36.0125	36.8699	37.7274	38.5848	39.4422	40.2997	41.1571	42.8720	44.5869	46.3018
723	.4404	.2978	.1553	.0127	.8702	.7276	.5851	.4425	.3000	.1574	.8723	.5872	.3021
726	.4406	.2981	.1555	.0130	.8704	.7279	.5853	.4428	.3002	.1577	.8726	.5875	.3024
729	.4409	.2983	.1558	.0132	.8707	.7282	.5856	.4431	.3005	.1580	.8729	.5878	.3027
732	.4411	.2986	.1560	.0135	.8710	.7284	.5859	.4433	.3008	.1583	.8732	.5881	.3031
428735	33.4413	34.2988	35.1563	36.0137	36.8712	37.7287	38.5862	39.4436	40.3011	41.1586	42.8735	44.5884	46.3034
738	.4416	.2990	.1565	.0140	.8715	.7289	.5864	.4439	.3014	.1588	.8738	.5888	.3037
741	.4418	.2993	.1568	.0142	.8717	.7292	.5867	.4442	.3017	.1591	.8741	.5891	.3040
744	.4420	.2995	.1570	.0145	.8720	.7295	.5870	.4444	.3019	.1594	.8744	.5894	.3044
747	.4423	.2998	.1573	.0147	.8722	.7297	.5872	.4447	.3022	.1597	.8747	.5897	.3047
428750	33.4425	34.3000	35.1575	36.0150	36.8725	37.7300	38.5875	39.4450	40.3025	41.1600	42.8750	44.5900	46.3050
753	.4427	.3002	.1577	.0153	.8728	.7303	.5878	.4453	.3028	.1603	.8753	.5903	.3053
756	.4430	.3005	.1580	.0155	.8730	.7305	.5880	.4456	.3031	.1606	.8756	.5906	.3056
759	.4432	.3007	.1582	.0158	.8733	.7308	.5883	.4458	.3033	.1609	.8759	.5909	.3060
762	.4434	.3010	.1585	.0160	.8735	.7311	.5886	.4461	.3036	.1612	.8762	.5912	.3063
428765	33.4437	34.3012	35.1587	36.0163	36.8738	37.7313	38.5889	39.4464	40.3039	41.1614	42.8765	44.5916	46.3066
768	.4439	.3014	.1590	.0165	.8740	.7316	.5891	.4467	.3042	.1617	.8768	.5919	.3069
771	.4441	.3017	.1592	.0168	.8743	.7318	.5894	.4469	.3045	.1620	.8771	.5922	.3073
774	.4444	.3019	.1595	.0170	.8746	.7321	.5897	.4472	.3048	.1623	.8774	.5925	.3076
777	.4446	.3022	.1597	.0173	.8748	.7324	.5899	.4475	.3050	.1626	.8777	.5928	.3079
428780	33.4448	34.3024	35.1600	36.0175	36.8751	37.7326	38.5902	39.4478	40.3053	41.1629	42.8780	44.5931	46.3082
783	.4451	.3026	.1602	.0178	.8753	.7329	.5905	.4480	.3056	.1632	.8783	.5934	.3086
786	.4453	.3029	.1605	.0180	.8756	.7332	.5907	.4483	.3059	.1635	.8786	.5937	.3089
789	.4455	.3031	.1607	.0183	.8759	.7334	.5910	.4486	.3062	.1637	.8789	.5941	.3092
792	.4458	.3034	.1609	.0185	.8761	.7337	.5913	.4489	.3064	.1640	.8792	.5944	.3095
428795	33.4460	34.3036	35.1612	36.0188	36.8764	37.7340	38.5916	39.4491	40.3067	41.1643	42.8795	44.5947	46.3099
798	.4462	.3038	.1614	.0190	.8766	.7342	.5918	.4494	.3070	.1646	.8798	.5950	.3102
801	.4465	.3041	.1617	.0193	.8769	.7345	.5921	.4497	.3073	.1649	.8801	.5953	.3105
804	.4467	.3043	.1619	.0195	.8771	.7348	.5924	.4500	.3076	.1652	.8804	.5956	.3108
807	.4469	.3046	.1622	.0198	.8774	.7350	.5926	.4502	.3079	.1655	.8807	.5959	.3112
428810	33.4472	34.3048	35.1624	36.0200	36.8777	37.7353	38.5929	39.4505	40.3081	41.1658	42.8810	44.5962	46.3115
813	.4474	.3050	.1627	.0203	.8779	.7355	.5932	.4508	.3084	.1660	.8813	.5966	.3118
816	.4476	.3053	.1629	.0205	.8782	.7358	.5934	.4511	.3087	.1663	.8816	.5969	.3121
819	.4479	.3055	.1632	.0208	.8784	.7361	.5937	.4513	.3090	.1666	.8819	.5972	.3125
822	.4481	.3058	.1634	.0210	.8787	.7363	.5940	.4516	.3093	.1669	.8822	.5975	.3128
428825	33.4484	34.3060	35.1637	36.0213	36.8790	37.7366	38.5943	39.4519	40.3096	41.1672	42.8825	44.5978	46.3131
828	.4486	.3062	.1639	.0216	.8792	.7369	.5945	.4522	.3098	.1675	.8828	.5981	.3134
831	.4488	.3065	.1641	.0218	.8795	.7371	.5948	.4525	.3101	.1678	.8831	.5984	.3137
834	.4491	.3067	.1644	.0221	.8797	.7374	.5951	.4527	.3104	.1681	.8834	.5987	.3141
837	.4493	.3070	.1646	.0223	.8800	.7377	.5953	.4530	.3107	.1684	.8837	.5990	.3144
428840	33.4495	34.3072	35.1649	36.0226	36.8802	37.7379	38.5956	39.4533	40.3110	41.1686	42.8840	44.5994	46.3147
843	.4498	.3074	.1651	.0228	.8805	.7382	.5959	.4536	.3112	.1689	.8843	.5997	.3150
846	.4500	.3077	.1654	.0231	.8808	.7384	.5961	.4538	.3115	.1692	.8846	.6000	.3154
849	.4502	.3079	.1656	.0233	.8810	.7387	.5964	.4541	.3118	.1695	.8849	.6003	.3157
852	.4505	.3082	.1659	.0236	.8813	.7390	.5967	.4544	.3121	.1698	.8852	.6006	.3160
428855	33.4507	34.3084	35.1661	36.0238	36.8815	37.7392	38.5970	39.4547	40.3124	41.1701	42.8855	44.6009	46.3163
858	.4509	.3086	.1664	.0241	.8818	.7395	.5972	.4549	.3127	.1704	.8858	.6012	.3167
861	.4512	.3089	.1666	.0243	.8820	.7398	.5975	.4552	.3129	.1707	.8861	.6015	.3170
864	.4514	.3091	.1668	.0246	.8823	.7400	.5978	.4555	.3132	.1709	.8864	.6019	.3173
867	.4516	.3094	.1671	.0248	.8826	.7403	.5980	.4558	.3135	.1712	.8867	.6022	.3176
428870	33.4519	34.3096	35.1673	36.0251	36.8828	37.7406	38.5983	39.4560	40.3138	41.1715	42.8870	44.6025	46.3180
873	.4521	.3098	.1676	.0253	.8831	.7408	.5986	.4563	.3141	.1718	.8873	.6028	.3183
876	.4523	.3101	.1678	.0256	.8833	.7411	.5988	.4566	.3143	.1721	.8876	.6031	.3186
879	.4526	.3103	.1681	.0258	.8836	.7414	.5991	.4569	.3146	.1724	.8879	.6034	.3189
882	.4528	.3106	.1683	.0261	.8839	.7416	.5994	.4571	.3149	.1727	.8882	.6037	.3193
428885	33.4530	34.3108	35.1686	36.0263	36.8841	37.7419	38.5997	39.4574	40.3152	41.1730	42.8885	44.6040	46.3196
888	.4533	.3110	.1688	.0266	.8844	.7421	.5999	.4577	.3155	.1732	.8888	.6044	.3199
891	.4535	.3113	.1691	.0268	.8846	.7424	.6002	.4580	.3158	.1735	.8891	.6047	.3202
894	.4537	.3115	.1693	.0271	.8849	.7427	.6005	.4582	.3160	.1738	.8894	.6050	.3206
897	.4540	.3118	.1696	.0273	.8851	.7429	.6007	.4585	.3163	.1741	.8897	.6053	.3209
428900	33.4542	34.3120	35.1698	36.0276	36.8854	37.7432	38.6010	39.4588	40.3166	41.1744	42.8900	44.6056	46.3212

MEGACYCLES PER SECOND

HARMONICS

BASIC FREQ.	52	54	56	58	60	62	64	66	68	70	72	74	76
428900	22.3028	23.1606	24.0184	24.8762	25.7340	26.5918	27.4496	28.3074	29.1652	30.0230	30.8808	31.7386	32.5964
903	.3030	.1608	.0186	.8764	.7342	.5920	.4498	.3076	.1654	.0232	.8810	.7388	.5966
906	.3031	.1609	.0187	.8765	.7344	.5922	.4500	.3078	.1656	.0234	.8812	.7390	.5969
909	.3033	.1611	.0189	.8767	.7345	.5924	.4502	.3080	.1658	.0236	.8814	.7393	.5971
912	.3034	.1612	.0191	.8769	.7347	.5925	.4504	.3082	.1660	.0238	.8817	.7395	.5973
428915	22.3036	23.1614	24.0192	24.8771	25.7349	26.5927	27.4506	28.3084	29.1662	30.0241	30.8819	31.7397	32.5975
918	.3037	.1616	.0194	.8772	.7351	.5929	.4508	.3086	.1664	.0243	.8821	.7399	.5978
921	.3039	.1617	.0196	.8774	.7353	.5931	.4509	.3088	.1666	.0245	.8823	.7402	.5980
924	.3040	.1619	.0197	.8776	.7354	.5933	.4511	.3090	.1668	.0247	.8825	.7404	.5982
927	.3042	.1621	.0199	.8778	.7356	.5935	.4513	.3092	.1670	.0249	.8827	.7406	.5985
428930	22.3044	23.1622	24.0201	24.8779	25.7358	26.5937	27.4515	28.3094	29.1672	30.0251	30.8830	31.7408	32.5987
933	.3045	.1624	.0202	.8781	.7360	.5938	.4517	.3096	.1674	.0253	.8832	.7410	.5989
936	.3047	.1625	.0204	.8783	.7362	.5940	.4519	.3098	.1676	.0255	.8834	.7413	.5991
939	.3048	.1627	.0206	.8785	.7363	.5942	.4521	.3100	.1679	.0257	.8836	.7415	.5994
942	.3050	.1629	.0208	.8786	.7365	.5944	.4523	.3102	.1681	.0259	.8838	.7417	.5996
428945	22.3051	23.1630	24.0209	24.8788	25.7367	26.5946	27.4525	28.3104	29.1683	30.0262	30.8840	31.7419	32.5998
948	.3053	.1632	.0211	.8790	.7369	.5948	.4527	.3106	.1685	.0264	.8843	.7422	.6000
951	.3055	.1634	.0213	.8792	.7371	.5950	.4529	.3108	.1687	.0266	.8845	.7424	.6003
954	.3056	.1635	.0214	.8793	.7372	.5951	.4531	.3110	.1689	.0268	.8847	.7426	.6005
957	.3058	.1637	.0216	.8795	.7374	.5953	.4532	.3112	.1691	.0270	.8849	.7428	.6007
428960	22.3059	23.1638	24.0218	24.8797	25.7376	26.5955	27.4534	28.3114	29.1693	30.0272	30.8851	31.7430	32.6010
963	.3061	.1640	.0219	.8799	.7378	.5957	.4536	.3116	.1695	.0274	.8853	.7433	.6012
966	.3062	.1642	.0221	.8800	.7380	.5959	.4538	.3118	.1697	.0276	.8856	.7435	.6014
969	.3064	.1643	.0223	.8802	.7381	.5961	.4540	.3120	.1699	.0278	.8858	.7437	.6016
972	.3065	.1645	.0224	.8804	.7383	.5963	.4542	.3122	.1701	.0280	.8860	.7439	.6019
428975	22.3067	23.1647	24.0226	24.8806	25.7385	26.5965	27.4544	28.3124	29.1703	30.0283	30.8862	31.7442	32.6021
978	.3069	.1648	.0228	.8807	.7387	.5966	.4546	.3125	.1705	.0285	.8864	.7444	.6023
981	.3070	.1650	.0229	.8809	.7389	.5968	.4548	.3127	.1707	.0287	.8866	.7446	.6026
984	.3072	.1651	.0231	.8811	.7390	.5970	.4550	.3129	.1709	.0289	.8868	.7448	.6028
987	.3073	.1653	.0233	.8812	.7392	.5972	.4552	.3131	.1711	.0291	.8871	.7450	.6030
428990	22.3075	23.1655	24.0234	24.8814	25.7394	26.5974	27.4554	28.3133	29.1713	30.0293	30.8873	31.7453	32.6032
993	.3076	.1656	.0236	.8816	.7396	.5976	.4556	.3135	.1715	.0295	.8875	.7455	.6035
996	.3078	.1658	.0238	.8818	.7398	.5978	.4557	.3137	.1717	.0297	.8877	.7457	.6037
999	.3079	.1659	.0239	.8819	.7399	.5979	.4559	.3139	.1719	.0299	.8879	.7459	.6039
429002	.3081	.1661	.0241	.8821	.7401	.5981	.4561	.3141	.1721	.0301	.8881	.7461	.6042
429005	22.3083	23.1663	24.0243	24.8823	25.7403	26.5983	27.4563	28.3143	29.1723	30.0304	30.8884	31.7464	32.6044
008	.3084	.1664	.0244	.8825	.7405	.5985	.4565	.3145	.1725	.0306	.8886	.7466	.6046
011	.3086	.1666	.0246	.8826	.7407	.5987	.4567	.3147	.1727	.0308	.8888	.7468	.6048
014	.3087	.1668	.0248	.8828	.7408	.5989	.4569	.3149	.1730	.0310	.8890	.7470	.6051
017	.3089	.1669	.0250	.8830	.7410	.5991	.4571	.3151	.1732	.0312	.8892	.7473	.6053
429020	22.3090	23.1671	24.0251	24.8832	25.7412	26.5992	27.4573	28.3153	29.1734	30.0314	30.8894	31.7475	32.6055
023	.3092	.1672	.0253	.8833	.7414	.5994	.4575	.3155	.1736	.0316	.8897	.7477	.6057
026	.3094	.1674	.0255	.8835	.7416	.5996	.4577	.3157	.1738	.0318	.8899	.7479	.6060
029	.3095	.1676	.0256	.8837	.7417	.5998	.4579	.3159	.1740	.0320	.8901	.7481	.6062
032	.3097	.1677	.0258	.8839	.7419	.6000	.4580	.3161	.1742	.0322	.8903	.7484	.6064
429035	22.3098	23.1679	24.0260	24.8840	25.7421	26.6002	27.4582	28.3163	29.1744	30.0325	30.8905	31.7486	32.6067
038	.3100	.1681	.0261	.8842	.7423	.6004	.4584	.3165	.1746	.0327	.8907	.7488	.6069
041	.3101	.1682	.0263	.8844	.7425	.6005	.4586	.3167	.1748	.0329	.8910	.7490	.6071
044	.3103	.1684	.0265	.8846	.7426	.6007	.4588	.3169	.1750	.0331	.8912	.7493	.6073
047	.3104	.1685	.0266	.8847	.7428	.6009	.4590	.3171	.1752	.0333	.8914	.7495	.6076
429050	22.3106	23.1687	24.0268	24.8849	25.7430	26.6011	27.4592	28.3173	29.1754	30.0335	30.8916	31.7497	32.6078
053	.3108	.1689	.0270	.8851	.7432	.6013	.4594	.3175	.1756	.0337	.8918	.7499	.6080
056	.3109	.1690	.0271	.8852	.7434	.6015	.4596	.3177	.1758	.0339	.8920	.7501	.6083
059	.3111	.1692	.0273	.8854	.7435	.6017	.4598	.3179	.1760	.0341	.8922	.7504	.6085
062	.3112	.1693	.0275	.8856	.7437	.6018	.4600	.3181	.1762	.0343	.8925	.7506	.6087
429065	22.3114	23.1695	24.0276	24.8858	25.7439	26.6020	27.4602	28.3183	29.1764	30.0346	30.8927	31.7508	32.6089
068	.3115	.1697	.0278	.8859	.7441	.6022	.4604	.3185	.1766	.0348	.8929	.7510	.6092
071	.3117	.1698	.0280	.8861	.7443	.6024	.4605	.3187	.1768	.0350	.8931	.7513	.6094
074	.3118	.1700	.0281	.8863	.7444	.6026	.4607	.3189	.1770	.0352	.8933	.7515	.6096
077	.3120	.1702	.0283	.8865	.7446	.6028	.4609	.3191	.1772	.0354	.8935	.7517	.6099
429080	22.3122	23.1703	24.0285	24.8866	25.7448	26.6030	27.4611	28.3193	29.1774	30.0356	30.8938	31.7519	32.6101
083	.3123	.1705	.0286	.8868	.7450	.6031	.4613	.3195	.1776	.0358	.8940	.7521	.6103
086	.3125	.1706	.0288	.8870	.7452	.6033	.4615	.3197	.1778	.0360	.8942	.7524	.6105
089	.3126	.1708	.0290	.8872	.7453	.6035	.4617	.3199	.1781	.0362	.8944	.7526	.6108
092	.3128	.1710	.0292	.8873	.7455	.6037	.4619	.3201	.1783	.0364	.8946	.7528	.6110
429095	22.3129	23.1711	24.0293	24.8875	25.7457	26.6039	27.4621	28.3203	29.1785	30.0367	30.8948	31.7530	32.6112
098	.3131	.1713	.0295	.8877	.7459	.6041	.4623	.3205	.1787	.0369	.8951	.7533	.6114
101	.3133	.1715	.0297	.8879	.7461	.6043	.4625	.3207	.1789	.0371	.8953	.7535	.6117
104	.3134	.1716	.0298	.8880	.7462	.6044	.4627	.3209	.1791	.0373	.8955	.7537	.6119
107	.3136	.1718	.0300	.8882	.7464	.6046	.4628	.3211	.1793	.0375	.8957	.7539	.6121
429110	22.3137	23.1719	24.0302	24.8884	25.7466	26.6048	27.4630	28.3213	29.1795	30.0377	30.8959	31.7541	32.6124
113	.3139	.1721	.0303	.8886	.7468	.6050	.4632	.3215	.1797	.0379	.8961	.7544	.6126
116	.3140	.1723	.0305	.8887	.7470	.6052	.4634	.3217	.1799	.0381	.8964	.7546	.6128
119	.3142	.1724	.0307	.8889	.7471	.6054	.4636	.3219	.1801	.0383	.8966	.7548	.6130
122	.3143	.1726	.0308	.8891	.7473	.6056	.4638	.3221	.1803	.0385	.8968	.7550	.6133
429125	22.3145	23.1728	24.0310	24.8893	25.7475	26.6058	27.4640	28.3223	29.1805	30.0388	30.8970	31.7553	32.6135
128	.3147	.1729	.0312	.8894	.7477	.6059	.4642	.3224	.1807	.0390	.8972	.7555	.6137
131	.3148	.1731	.0313	.8896	.7479	.6061	.4644	.3226	.1809	.0392	.8974	.7557	.6140
134	.3150	.1732	.0315	.8898	.7480	.6063	.4646	.3228	.1811	.0394	.8976	.7559	.6142
137	.3151	.1734	.0317	.8899	.7482	.6065	.4648	.3230	.1813	.0396	.8979	.7561	.6144
429140	22.3153	23.1736	24.0318	24.8901	25.7484	26.6067	27.4650	28.3232	29.1815	30.0398	30.8981	31.7564	32.6146
143	.3154	.1737	.0320	.8903	.7486	.6069	.4652	.3234	.1817	.0400	.8983	.7566	.6149
146	.3156	.1739	.0322	.8905	.7488	.6071	.4653	.3236	.1819	.0402	.8985	.7568	.6151
149	.3157	.1740	.0323	.8906	.7489	.6072	.4655	.3238	.1821	.0404	.8987	.7570	.6153
152	.3159	.1742	.0325	.8908	.7491	.6074	.4657	.3240	.1823	.0406	.8989	.7572	.6156
429155	22.3161	23.1744	24.0327	24.8910	25.7493	26.6076	27.4659	28.3242	29.1825	30.0409	30.8992	31.7575	32.6158
158	.3162	.1745	.0328	.8912	.7495	.6078	.4661	.3244	.1827	.0411	.8994	.7577	.6160
161	.3164	.1747	.0330	.8913	.7497	.6080	.4663	.3246	.1829	.0413	.8996	.7579	.6162
164	.3165	.1749	.0332	.8915	.7498	.6082	.4665	.3248	.1832	.0415	.8998	.7581	.6165
167	.3167	.1750	.0334	.8917	.7500	.6084	.4667	.3250	.1834	.0417	.9000	.7584	.6167
429170	22.3168	23.1752	24.0335	24.8919	25.7502	26.6085	27.4669	28.3252	29.1836	30.0419	30.9002	31.7586	32.6169
173	.3170	.1753	.0337	.8920	.7504	.6087	.4671	.3254	.1838	.0421	.9005	.7588	.6171
176	.3172	.1755	.0339	.8922	.7506	.6089	.4673	.3256	.1840	.0423	.9007	.7590	.6174
179	.3173	.1757	.0340	.8924	.7507	.6091	.4675	.3258	.1842	.0425	.9009	.7592	.6176
182	.3175	.1758	.0342	.8926	.7509	.6093	.4676	.3260	.1844	.0427	.9011	.7595	.6178
429185	22.3176	23.1760	24.0344	24.8927	25.7511	26.6095	27.4678	28.3262	29.1846	30.0430	30.9013	31.7597	32.6181
188	.3178	.1762	.0345	.8929	.7513	.6097	.4680	.3264	.1848	.0432	.9015	.7599	.6183
191	.3179	.1763	.0347	.8931	.7515	.6098	.4682	.3266	.1850	.0434	.9018	.7601	.6185
194	.3181	.1765	.0349	.8933	.7516	.6100	.4684	.3268	.1852	.0436	.9020	.7604	.6187
197	.3182	.1766	.0350	.8934	.7518	.6102	.4686	.3270	.1854	.0438	.9022	.7606	.6190
429200	22.3184	23.1768	24.0352	24.8936	25.7520	26.6104	27.4688	28.3272	29.1856	30.0440	30.9024	31.7608	32.6192

MEGACYCLES PER SECOND

H A R M O N I C S

BASIC FREQ.	78	80	82	84	86	88	90	92	94	96	100	104	108
428900	33.4542	34.3120	35.1698	36.0276	36.8854	37.7432	38.6010	39.4588	40.3166	41.1744	42.8900	44.6056	46.3212
903	.4544	.3122	.1700	.0279	.8857	.7435	.6013	.4591	.3169	.1747	.8903	.6059	.3215
906	.4547	.3125	.1703	.0281	.8859	.7437	.6015	.4594	.3172	.1750	.8906	.6062	.3218
909	.4549	.3127	.1705	.0284	.8862	.7440	.6018	.4596	.3174	.1753	.8909	.6065	.3222
912	.4551	.3130	.1708	.0286	.8864	.7443	.6021	.4599	.3177	.1756	.8912	.6068	.3225
428915	33.4554	34.3132	35.1710	36.0289	36.8867	37.7445	38.6024	29.4602	40.3180	41.1758	42.8915	44.6072	46.3228
918	.4556	.3134	.1713	.0291	.8869	.7448	.6026	.4605	.3183	.1761	.8918	.6075	.3231
921	.4558	.3137	.1715	.0294	.8872	.7450	.6029	.4607	.3186	.1764	.8921	.6078	.3235
924	.4561	.3139	.1718	.0296	.8875	.7453	.6032	.4610	.3189	.1767	.8924	.6081	.3238
927	.4563	.3142	.1720	.0299	.8877	.7456	.6034	.4613	.3191	.1770	.8927	.6084	.3241
428930	33.4565	34.3144	35.1723	36.0301	36.8880	37.7458	38.6037	39.4616	40.3194	41.1773	42.8930	44.6087	46.3244
933	.4568	.3146	.1725	.0304	.8882	.7461	.6040	.4618	.3197	.1776	.8933	.6090	.3248
936	.4570	.3149	.1728	.0306	.8885	.7464	.6042	.4621	.3200	.1779	.8936	.6093	.3251
939	.4572	.3151	.1730	.0309	.8888	.7466	.6045	.4624	.3203	.1781	.8939	.6097	.3254
942	.4575	.3154	.1732	.0311	.8890	.7469	.6048	.4627	.3205	.1784	.8942	.6100	.3257
428945	33.4577	34.3156	35.1735	36.0314	36.8893	37.7472	38.6051	39.4629	40.3208	41.1787	42.8945	44.6103	46.3261
948	.4579	.3158	.1737	.0316	.8895	.7474	.6053	.4632	.3211	.1790	.8948	.6106	.3264
951	.4582	.3161	.1740	.0319	.8898	.7477	.6056	.4635	.3214	.1793	.8951	.6109	.3267
954	.4584	.3163	.1742	.0321	.8900	.7480	.6059	.4638	.3217	.1796	.8954	.6112	.3270
957	.4586	.3166	.1745	.0324	.8903	.7482	.6061	.4640	.3220	.1799	.8957	.6115	.3274
428960	33.4589	34.3168	35.1747	36.0326	36.8906	37.7485	38.6064	39.4643	40.3222	41.1802	42.8960	44.6118	46.3277
963	.4591	.3170	.1750	.0329	.8908	.7487	.6067	.4646	.3225	.1804	.8963	.6122	.3280
966	.4593	.3173	.1752	.0331	.8911	.7490	.6069	.4649	.3228	.1807	.8966	.6125	.3283
969	.4596	.3175	.1755	.0334	.8913	.7493	.6072	.4651	.3231	.1810	.8969	.6128	.3287
972	.4598	.3178	.1757	.0336	.8916	.7495	.6075	.4654	.3234	.1813	.8972	.6131	.3290
428975	33.4601	34.3180	35.1760	36.0339	36.8919	37.7498	38.6078	39.4657	40.3237	41.1816	42.8975	44.6134	46.3293
978	.4603	.3182	.1762	.0342	.8921	.7501	.6080	.4660	.3239	.1819	.8978	.6137	.3296
981	.4605	.3185	.1764	.0344	.8924	.7503	.6083	.4663	.3242	.1822	.8981	.6140	.3299
984	.4608	.3187	.1767	.0347	.8926	.7506	.6086	.4665	.3245	.1825	.8984	.6143	.3303
987	.4610	.3190	.1769	.0349	.8929	.7509	.6088	.4668	.3248	.1828	.8987	.6146	.3306
428990	33.4612	34.3192	35.1772	36.0352	36.8931	37.7511	38.6091	39.4671	40.3251	41.1830	42.8990	44.6150	46.3309
993	.4615	.3194	.1774	.0354	.8934	.7514	.6094	.4674	.3253	.1833	.8993	.6153	.3312
996	.4617	.3197	.1777	.0357	.8937	.7516	.6096	.4676	.3256	.1836	.8996	.6156	.3316
999	.4619	.3199	.1779	.0359	.8939	.7519	.6099	.4679	.3259	.1839	.8999	.6159	.3319
429002	.4622	.3202	.1782	.0362	.8942	.7522	.6102	.4682	.3262	.1842	.9002	.6162	.3322
429005	33.4624	34.3204	35.1784	36.0364	36.8944	37.7524	38.6105	39.4685	40.3265	41.1845	42.9005	44.6165	46.3325
008	.4626	.3206	.1787	.0367	.8947	.7527	.6107	.4687	.3268	.1848	.9008	.6168	.3329
011	.4629	.3209	.1789	.0369	.8949	.7530	.6110	.4690	.3270	.1851	.9011	.6171	.3332
014	.4631	.3211	.1791	.0372	.8952	.7532	.6113	.4693	.3273	.1853	.9014	.6175	.3335
017	.4633	.3214	.1794	.0374	.8955	.7535	.6115	.4696	.3276	.1856	.9017	.6178	.3338
429020	33.4636	34.3216	35.1796	36.0377	36.8957	37.7538	38.6118	39.4698	40.3279	41.1859	42.9020	44.6181	46.3342
023	.4638	.3218	.1799	.0379	.8960	.7540	.6121	.4701	.3282	.1862	.9023	.6184	.3345
026	.4640	.3221	.1801	.0382	.8962	.7543	.6123	.4704	.3284	.1865	.9026	.6187	.3348
029	.4643	.3223	.1804	.0384	.8965	.7546	.6126	.4707	.3287	.1868	.9029	.6190	.3351
032	.4645	.3226	.1806	.0387	.8968	.7548	.6129	.4709	.3290	.1871	.9032	.6193	.3355
429035	33.4647	34.3228	35.1809	36.0389	36.8970	37.7551	38.6132	39.4712	40.3293	41.1874	42.9035	44.6196	46.3358
038	.4650	.3230	.1811	.0392	.8973	.7553	.6134	.4715	.3296	.1876	.9038	.6200	.3361
041	.4652	.3233	.1814	.0394	.8975	.7556	.6137	.4718	.3299	.1879	.9041	.6203	.3364
044	.4654	.3235	.1816	.0397	.8978	.7559	.6140	.4720	.3301	.1882	.9044	.6206	.3368
047	.4657	.3238	.1819	.0399	.8980	.7561	.6142	.4723	.3304	.1885	.9047	.6209	.3371
429050	33.4659	34.3240	35.1821	36.0402	36.8983	37.7564	38.6145	39.4726	40.3307	41.1888	42.9050	44.6212	46.3374
053	.4661	.3242	.1823	.0405	.8986	.7567	.6148	.4729	.3310	.1891	.9053	.6215	.3377
056	.4664	.3245	.1826	.0407	.8988	.7569	.6150	.4732	.3313	.1894	.9056	.6218	.3380
059	.4666	.3247	.1828	.0410	.8991	.7572	.6153	.4734	.3315	.1897	.9059	.6221	.3384
062	.4668	.3250	.1831	.0412	.8993	.7575	.6156	.4737	.3318	.1900	.9062	.6224	.3387
429065	33.4671	34.3252	35.1833	36.0415	36.8996	37.7577	38.6159	39.4740	40.3321	41.1902	42.9065	44.6228	46.3390
068	.4673	.3254	.1836	.0417	.8998	.7580	.6161	.4743	.3324	.1905	.9068	.6231	.3393
071	.4675	.3257	.1838	.0420	.9001	.7582	.6164	.4745	.3327	.1908	.9071	.6234	.3397
074	.4678	.3259	.1841	.0422	.9004	.7585	.6167	.4748	.3330	.1911	.9074	.6237	.3400
077	.4680	.3262	.1843	.0425	.9006	.7588	.6169	.4751	.3332	.1914	.9077	.6240	.3403
429080	33.4682	34.3264	35.1846	36.0427	36.9009	37.7590	38.6172	39.4754	40.3335	41.1917	42.9080	44.6243	46.3406
083	.4685	.3266	.1848	.0430	.9011	.7593	.6175	.4756	.3338	.1920	.9083	.6246	.3410
086	.4687	.3269	.1851	.0432	.9014	.7596	.6177	.4759	.3341	.1923	.9086	.6249	.3413
089	.4689	.3271	.1853	.0435	.9017	.7598	.6180	.4762	.3344	.1925	.9089	.6253	.3416
092	.4692	.3274	.1855	.0437	.9019	.7601	.6183	.4765	.3346	.1928	.9092	.6256	.3419
429095	33.4694	34.3276	35.1858	36.0440	36.9022	37.7604	38.6186	39.4767	40.3349	41.1931	42.9095	44.6259	46.3423
098	.4696	.3278	.1860	.0442	.9024	.7606	.6188	.4770	.3352	.1934	.9098	.6262	.3426
101	.4699	.3281	.1863	.0445	.9027	.7609	.6191	.4773	.3355	.1937	.9101	.6265	.3429
104	.4701	.3283	.1865	.0447	.9029	.7612	.6194	.4776	.3358	.1940	.9104	.6268	.3432
107	.4703	.3286	.1868	.0450	.9032	.7614	.6196	.4778	.3361	.1943	.9107	.6271	.3436
429110	33.4706	34.3288	35.1870	36.0452	36.9035	37.7617	38.6199	39.4781	40.3363	41.1946	42.9110	44.6274	46.3439
113	.4708	.3290	.1873	.0455	.9037	.7619	.6202	.4784	.3366	.1948	.9113	.6278	.3442
116	.4710	.3293	.1875	.0457	.9040	.7622	.6204	.4787	.3369	.1951	.9116	.6281	.3445
119	.4713	.3295	.1878	.0460	.9042	.7625	.6207	.4789	.3372	.1954	.9119	.6284	.3449
122	.4715	.3298	.1880	.0462	.9045	.7627	.6210	.4792	.3375	.1957	.9122	.6287	.3452
429125	33.4718	34.3300	35.1883	36.0465	36.9048	37.7630	38.6213	39.4795	40.3378	41.1960	42.9125	44.6290	46.3455
128	.4720	.3302	.1885	.0468	.9050	.7633	.6215	.4798	.3380	.1963	.9128	.6293	.3458
131	.4722	.3305	.1887	.0470	.9053	.7635	.6218	.4801	.3383	.1966	.9131	.6296	.3461
134	.4725	.3307	.1890	.0473	.9055	.7638	.6221	.4803	.3386	.1969	.9134	.6299	.3465
137	.4727	.3310	.1892	.0475	.9058	.7641	.6223	.4806	.3389	.1972	.9137	.6302	.3468
429140	33.4729	34.3312	35.1895	36.0478	36.9060	37.7643	38.6226	39.4809	40.3392	41.1974	42.9140	44.6306	46.3471
143	.4732	.3314	.1897	.0480	.9063	.7646	.6229	.4812	.3394	.1977	.9143	.6309	.3474
146	.4734	.3317	.1900	.0483	.9066	.7648	.6231	.4814	.3397	.1980	.9146	.6312	.3478
149	.4736	.3319	.1902	.0485	.9068	.7651	.6234	.4817	.3400	.1983	.9149	.6315	.3481
152	.4739	.3322	.1905	.0488	.9071	.7654	.6237	.4820	.3403	.1986	.9152	.6318	.3484
429155	33.4741	34.3324	35.1907	36.0490	36.9073	37.7656	38.6240	39.4823	40.3406	41.1989	42.9155	44.6321	46.3487
158	.4743	.3326	.1910	.0493	.9076	.7659	.6242	.4825	.3409	.1992	.9158	.6324	.3491
161	.4746	.3329	.1912	.0495	.9078	.7662	.6245	.4828	.3411	.1995	.9161	.6327	.3494
164	.4748	.3331	.1914	.0498	.9081	.7664	.6248	.4831	.3414	.1997	.9164	.6331	.3497
167	.4750	.3334	.1917	.0500	.9084	.7667	.6250	.4834	.3417	.2000	.9167	.6334	.3500
429170	33.4753	34.3336	35.1919	36.0503	36.9086	37.7670	38.6253	39.4836	40.3420	41.2003	42.9170	44.6337	46.3504
173	.4755	.3338	.1922	.0505	.9089	.7672	.6256	.4839	.3423	.2006	.9173	.6340	.3507
176	.4757	.3341	.1924	.0508	.9091	.7675	.6258	.4842	.3425	.2009	.9176	.6343	.3510
179	.4760	.3343	.1927	.0510	.9094	.7678	.6261	.4845	.3428	.2012	.9179	.6346	.3513
182	.4762	.3346	.1929	.0513	.9097	.7680	.6264	.4847	.3431	.2015	.9182	.6349	.3517
429185	33.4764	34.3348	35.1932	36.0515	36.9099	37.7683	38.6267	39.4850	40.3434	41.2018	42.9185	44.6352	46.3520
188	.4767	.3350	.1934	.0518	.9102	.7685	.6269	.4853	.3437	.2020	.9188	.6356	.3523
191	.4769	.3353	.1937	.0520	.9104	.7688	.6272	.4856	.3440	.2023	.9191	.6359	.3526
194	.4771	.3355	.1939	.0523	.9107	.7691	.6275	.4858	.3442	.2026	.9194	.6362	.3530
197	.4774	.3358	.1942	.0525	.9109	.7693	.6277	.4861	.3445	.2029	.9197	.6365	.3533
429200	33.4776	34.3360	35.1944	36.0528	36.9112	37.7696	38.6280	39.4864	40.3448	41.2032	42.9200	44.6368	46.3536

MEGACYCLES PER SECOND

HARMONICS

BASIC FREQ.	52	54	56	58	60	62	64	66	68	70	72	74	76
429200	22.3184	23.1768	24.0352	24.8936	25.7520	26.6104	27.4688	28.3272	29.1856	30.0440	30.9024	31.7608	32.6192
203	.3186	.1770	.0354	.8938	.7522	.6106	.4690	.3274	.1858	.0442	.9026	.7610	.6194
206	.3187	.1771	.0355	.8939	.7524	.6108	.4692	.3276	.1860	.0444	.9028	.7612	.6197
209	.3189	.1773	.0357	.8941	.7525	.6110	.4694	.3278	.1862	.0446	.9030	.7615	.6199
212	.3190	.1774	.0359	.8943	.7527	.6111	.4696	.3280	.1864	.0448	.9033	.7617	.6201
429215	22.3192	23.1776	24.0360	24.8945	25.7529	26.6113	27.4698	28.3282	29.1866	30.0451	30.9035	31.7619	32.6203
218	.3193	.1778	.0362	.8946	.7531	.6115	.4700	.3284	.1868	.0453	.9037	.7621	.6206
221	.3195	.1779	.0364	.8948	.7533	.6117	.4701	.3286	.1870	.0455	.9039	.7624	.6208
224	.3196	.1781	.0365	.8950	.7534	.6119	.4703	.3288	.1872	.0457	.9041	.7626	.6210
227	.3198	.1783	.0367	.8952	.7536	.6121	.4705	.3290	.1874	.0459	.9043	.7628	.6213
429230	22.3200	23.1784	24.0369	24.8953	25.7538	26.6123	27.4707	28.3292	29.1876	30.0461	30.9046	31.7630	32.6215
233	.3201	.1786	.0370	.8955	.7540	.6124	.4709	.3294	.1878	.0463	.9048	.7632	.6217
236	.3203	.1787	.0372	.8957	.7542	.6126	.4711	.3296	.1880	.0465	.9050	.7635	.6219
239	.3204	.1789	.0374	.8959	.7543	.6128	.4713	.3298	.1883	.0467	.9052	.7637	.6222
242	.3206	.1791	.0376	.8960	.7545	.6130	.4715	.3300	.1885	.0469	.9054	.7639	.6224
429245	22.3207	23.1792	24.0377	24.8962	25.7547	26.6132	27.4717	28.3302	29.1887	30.0472	30.9056	31.7641	32.6226
248	.3209	.1794	.0379	.8964	.7549	.6134	.4719	.3304	.1889	.0474	.9059	.7644	.6228
251	.3211	.1796	.0381	.8966	.7551	.6136	.4721	.3306	.1891	.0476	.9061	.7646	.6231
254	.3212	.1797	.0382	.8967	.7552	.6137	.4723	.3308	.1893	.0478	.9063	.7648	.6233
257	.3214	.1799	.0384	.8969	.7554	.6139	.4724	.3310	.1895	.0480	.9065	.7650	.6235
429260	22.3215	23.1800	24.0386	24.8971	25.7556	26.6141	27.4726	28.3312	29.1897	30.0482	30.9067	31.7652	32.6238
263	.3217	.1802	.0387	.8973	.7558	.6143	.4728	.3314	.1899	.0484	.9069	.7655	.6240
266	.3218	.1804	.0389	.8974	.7560	.6145	.4730	.3316	.1901	.0486	.9072	.7657	.6242
269	.3220	.1805	.0391	.8976	.7561	.6147	.4732	.3318	.1903	.0488	.9074	.7659	.6244
272	.3221	.1807	.0392	.8978	.7563	.6149	.4734	.3320	.1905	.0490	.9076	.7661	.6247
429275	22.3223	23.1809	24.0394	24.8980	25.7565	26.6151	27.4736	28.3322	29.1907	30.0493	30.9078	31.7664	32.6249
278	.3225	.1810	.0396	.8981	.7567	.6152	.4738	.3323	.1909	.0495	.9080	.7666	.6251
281	.3226	.1812	.0397	.8983	.7569	.6154	.4740	.3325	.1911	.0497	.9082	.7668	.6254
284	.3228	.1813	.0399	.8985	.7570	.6156	.4742	.3327	.1913	.0499	.9084	.7670	.6256
287	.3229	.1815	.0401	.8986	.7572	.6158	.4744	.3329	.1915	.0501	.9087	.7672	.6258
429290	22.3231	23.1817	24.0402	24.8988	25.7574	26.6160	27.4746	28.3331	29.1917	30.0503	30.9089	31.7675	32.6260
293	.3232	.1818	.0404	.8990	.7576	.6162	.4748	.3333	.1919	.0505	.9091	.7677	.6263
296	.3234	.1820	.0406	.8992	.7578	.6164	.4749	.3335	.1921	.0507	.9093	.7679	.6265
299	.3235	.1821	.0407	.8993	.7579	.6165	.4751	.3337	.1923	.0509	.9095	.7681	.6267
302	.3237	.1823	.0409	.8995	.7581	.6167	.4753	.3339	.1925	.0511	.9097	.7683	.6270
429305	22.3239	23.1825	24.0411	24.8997	25.7583	26.6169	27.4755	28.3341	29.1927	30.0514	30.9100	31.7686	32.6272
308	.3240	.1826	.0412	.8999	.7585	.6171	.4757	.3343	.1929	.0516	.9102	.7688	.6274
311	.3242	.1828	.0414	.9000	.7587	.6173	.4759	.3345	.1931	.0518	.9104	.7690	.6276
314	.3243	.1830	.0416	.9002	.7588	.6175	.4761	.3347	.1934	.0520	.9106	.7692	.6279
317	.3245	.1831	.0418	.9004	.7590	.6177	.4763	.3349	.1936	.0522	.9108	.7695	.6281
429320	22.3246	23.1833	24.0419	24.9006	25.7592	26.6178	27.4765	28.3351	29.1938	30.0524	30.9110	31.7697	32.6283
323	.3248	.1834	.0421	.9007	.7594	.6180	.4767	.3353	.1940	.0526	.9113	.7699	.6285
326	.3250	.1836	.0423	.9009	.7596	.6182	.4769	.3355	.1942	.0528	.9115	.7701	.6288
329	.3251	.1838	.0424	.9011	.7597	.6184	.4771	.3357	.1944	.0530	.9117	.7703	.6290
332	.3253	.1839	.0426	.9013	.7599	.6186	.4772	.3359	.1946	.0532	.9119	.7706	.6292
429335	22.3254	23.1841	24.0428	24.9014	25.7601	26.6188	27.4774	28.3361	29.1948	30.0535	30.9121	31.7708	32.6295
338	.3256	.1843	.0429	.9016	.7603	.6190	.4776	.3363	.1950	.0537	.9123	.7710	.6297
341	.3257	.1844	.0431	.9018	.7605	.6191	.4778	.3365	.1952	.0539	.9126	.7712	.6299
344	.3259	.1846	.0433	.9020	.7606	.6193	.4780	.3367	.1954	.0541	.9128	.7715	.6301
347	.3260	.1847	.0434	.9021	.7608	.6195	.4782	.3369	.1956	.0543	.9130	.7717	.6304
429350	22.3262	23.1849	24.0436	24.9023	25.7610	26.6197	27.4784	28.3371	29.1958	30.0545	30.9132	31.7719	32.6306
353	.3264	.1851	.0438	.9025	.7612	.6199	.4786	.3373	.1960	.0547	.9134	.7721	.6308
356	.3265	.1852	.0439	.9026	.7614	.6201	.4788	.3375	.1962	.0549	.9136	.7723	.6311
359	.3267	.1854	.0441	.9028	.7615	.6203	.4790	.3377	.1964	.0551	.9138	.7726	.6313
362	.3268	.1855	.0443	.9030	.7617	.6204	.4792	.3379	.1966	.0553	.9141	.7728	.6315
429365	22.3270	23.1857	24.0444	24.9032	25.7619	26.6206	27.4794	28.3381	29.1968	30.0556	30.9143	31.7730	32.6317
368	.3271	.1859	.0446	.9033	.7621	.6208	.4796	.3383	.1970	.0558	.9145	.7732	.6320
371	.3273	.1860	.0448	.9035	.7623	.6210	.4797	.3385	.1972	.0560	.9147	.7735	.6322
374	.3274	.1862	.0449	.9037	.7624	.6212	.4799	.3387	.1974	.0562	.9149	.7737	.6324
377	.3276	.1864	.0451	.9039	.7626	.6214	.4801	.3389	.1976	.0564	.9151	.7739	.6327
429380	22.3278	23.1865	24.0453	24.9040	25.7628	26.6216	27.4803	28.3391	29.1978	30.0566	30.9154	31.7741	32.6329
383	.3279	.1867	.0454	.9042	.7630	.6217	.4805	.3393	.1980	.0568	.9156	.7743	.6331
386	.3281	.1868	.0456	.9044	.7632	.6219	.4807	.3395	.1982	.0570	.9158	.7746	.6333
389	.3282	.1870	.0458	.9046	.7633	.6221	.4809	.3397	.1985	.0572	.9160	.7748	.6336
392	.3284	.1872	.0460	.9047	.7635	.6223	.4811	.3399	.1987	.0574	.9162	.7750	.6338
429395	22.3285	23.1873	24.0461	24.9049	25.7637	26.6225	27.4813	28.3401	29.1989	30.0577	30.9164	31.7752	32.6340
398	.3287	.1875	.0463	.9051	.7639	.6227	.4815	.3403	.1991	.0579	.9167	.7755	.6342
401	.3289	.1877	.0465	.9053	.7641	.6229	.4817	.3405	.1993	.0581	.9169	.7757	.6345
404	.3290	.1878	.0466	.9054	.7642	.6230	.4819	.3407	.1995	.0583	.9171	.7759	.6347
407	.3292	.1880	.0468	.9056	.7644	.6232	.4820	.3409	.1997	.0585	.9173	.7761	.6349
429410	22.3293	23.1881	24.0470	24.9058	25.7646	26.6234	27.4822	28.3411	29.1999	30.0587	30.9175	31.7763	32.6352
413	.3295	.1883	.0471	.9060	.7648	.6236	.4824	.3413	.2001	.0589	.9177	.7766	.6354
416	.3296	.1885	.0473	.9061	.7650	.6238	.4826	.3415	.2003	.0591	.9180	.7768	.6356
419	.3298	.1886	.0475	.9063	.7651	.6240	.4828	.3417	.2005	.0593	.9182	.7770	.6358
422	.3299	.1888	.0476	.9065	.7653	.6242	.4830	.3419	.2007	.0595	.9184	.7772	.6361
429425	22.3301	23.1890	24.0478	24.9067	25.7655	26.6244	27.4832	28.3421	29.2009	30.0598	30.9186	31.7775	32.6363
428	.3303	.1891	.0480	.9068	.7657	.6245	.4834	.3422	.2011	.0600	.9188	.7777	.6365
431	.3304	.1893	.0481	.9070	.7659	.6247	.4836	.3424	.2013	.0602	.9190	.7779	.6468
434	.3306	.1894	.0483	.9072	.7660	.6249	.4838	.3426	.2015	.0604	.9192	.7781	.6370
437	.3307	.1896	.0485	.9073	.7662	.6251	.4840	.3428	.2017	.0606	.9195	.7783	.6372
429440	22.3309	23.1898	24.0486	24.9075	25.7664	26.6253	27.4842	28.3430	29.2019	30.0608	30.9197	31.7786	32.6374
443	.3310	.1899	.0488	.9077	.7666	.6255	.4844	.3432	.2021	.0610	.9199	.7788	.6377
446	.3312	.1901	.0490	.9079	.7668	.6257	.4845	.3434	.2023	.0612	.9201	.7790	.6379
449	.3313	.1902	.0491	.9080	.7669	.6258	.4847	.3436	.2025	.0614	.9203	.7792	.6381
452	.3315	.1904	.0493	.9082	.7671	.6260	.4849	.3438	.2027	.0616	.9205	.7794	.6384
429455	22.3317	23.1906	24.0495	24.9084	25.7673	26.6262	27.4851	28.3440	29.2029	30.0619	30.9208	31.7797	32.6386
458	.3318	.1907	.0496	.9086	.7675	.6264	.4853	.3442	.2031	.0621	.9210	.7799	.6388
461	.3320	.1909	.0498	.9087	.7677	.6266	.4855	.3444	.2033	.0623	.9212	.7801	.6390
464	.3321	.1911	.0500	.9089	.7678	.6268	.4857	.3446	.2036	.0625	.9214	.7803	.6393
467	.3323	.1912	.0502	.9091	.7680	.6270	.4859	.3448	.2038	.0627	.9216	.7806	.6395
429470	22.3324	23.1914	24.0503	24.9093	25.7682	26.6271	27.4861	28.3450	29.2040	30.0629	30.9218	31.7808	32.6397
473	.3326	.1915	.0505	.9094	.7684	.6273	.4863	.3452	.2042	.0631	.9221	.7810	.6399
476	.3328	.1917	.0507	.9096	.7686	.6275	.4865	.3454	.2044	.0633	.9223	.7812	.6402
479	.3329	.1919	.0508	.9098	.7687	.6277	.4867	.3456	.2046	.0635	.9225	.7814	.6404
482	.3331	.1920	.0510	.9100	.7689	.6279	.4868	.3458	.2048	.0637	.9227	.8717	.6406
429485	22.3332	23.1922	24.0512	24.9101	25.7691	26.6281	27.4870	28.3460	29.2050	30.0640	30.9229	31.7819	32.6409
488	.3334	.1924	.0513	.9103	.7693	.6283	.4872	.3462	.2052	.0642	.9231	.7821	.6411
491	.3335	.1925	.0515	.9105	.7695	.6284	.4874	.3464	.2054	.0644	.9234	.7823	.6413
494	.3337	.1927	.0517	.9107	.7696	.6286	.4876	.3466	.2056	.0646	.9236	.7826	.6415
497	.3338	.1928	.0518	.9108	.7698	.6288	.4878	.3468	.2058	.0648	.9238	.7828	.6418
429500	22.3340	23.1930	24.0520	24.9110	25.7700	26.6290	27.4880	28.3470	29.2060	30.0650	30.9240	31.7830	32.6420

MEGACYCLES PER SECOND

H A R M O N I C S

BASIC FREQ.	78	80	82	84	86	88	90	92	94	96	100	104	108
429200	33.4776	34.3360	35.1944	36.0528	36.9112	37.7696	38.6280	39.4864	40.3448	41.2032	42.9200	44.6368	46.3536
203	.4778	.3362	.1946	.0531	.9115	.7699	.6283	.4867	.3451	.2035	.9203	.6371	.3539
206	.4781	.3365	.1949	.0533	.9117	.7701	.6285	.4870	.3454	.2038	.9206	.6374	.3542
209	.4783	.3367	.1951	.0536	.9120	.7704	.6288	.4872	.3456	.2041	.9209	.6377	.3546
212	.4785	.3370	.1954	.0538	.9122	.7707	.6291	.4875	.3459	.2044	.9212	.6380	.3549
429215	33.4788	34.3372	35.1956	36.0541	36.9125	37.7709	38.6294	39.4878	40.3462	41.2046	42.9215	44.6384	46.3552
218	.4790	.3374	.1959	.0543	.9127	.7712	.6296	.4881	.3465	.2049	.9218	.6387	.3555
221	.4792	.3377	.1961	.0546	.9130	.7714	.6299	.4883	.3468	.2052	.9221	.6390	.3559
224	.4795	.3379	.1964	.0548	.9133	.7717	.6302	.4886	.3471	.2055	.9224	.6393	.3562
227	.4797	.3382	.1966	.0551	.9135	.7720	.6304	.4889	.3473	.2058	.9227	.6396	.3565
429230	33.4799	34.3384	35.1969	36.0553	36.9138	37.7722	38.6307	39.4892	40.3476	41.2061	42.9230	44.6399	46.3568
233	.4802	.3386	.1971	.0556	.9140	.7725	.6310	.4894	.3479	.2064	.9233	.6402	.3572
236	.4804	.3389	.1974	.0558	.9143	.7728	.6312	.4897	.3482	.2067	.9236	.6405	.3575
239	.4806	.3391	.1976	.0561	.9146	.7730	.6315	.4900	.3485	.2069	.9239	.6409	.3578
242	.4809	.3394	.1978	.0563	.9148	.7733	.6318	.4903	.3487	.2072	.9242	.6412	.3581
429245	33.4811	34.3396	35.1981	36.0566	36.9151	37.7736	38.6321	39.4905	40.3490	41.2075	42.9245	44.6415	46.3585
248	.4813	.3398	.1983	.0568	.9153	.7738	.6323	.4908	.3493	.2078	.9248	.6418	.3588
251	.4816	.3401	.1986	.0571	.9156	.7741	.6326	.4911	.3496	.2081	.9251	.6421	.3591
254	.4818	.3403	.1988	.0573	.9158	.7744	.6329	.4914	.3499	.2084	.9254	.6424	.3594
257	.4820	.3406	.1991	.0576	.9161	.7746	.6331	.4916	.3502	.2087	.9257	.6427	.3598
429260	33.4823	34.3408	35.1993	36.0578	36.9164	37.7749	38.6334	39.4919	40.3504	41.2090	42.9260	44.6430	46.3601
263	.4825	.3410	.1996	.0581	.9166	.7751	.6337	.4922	.3507	.2092	.9263	.6434	.3604
266	.4827	.3413	.1998	.0583	.9169	.7754	.6339	.4925	.3510	.2095	.9266	.6437	.3607
269	.4830	.3415	.2001	.0586	.9171	.7757	.6342	.4927	.3513	.2098	.9269	.6440	.3611
272	.4832	.3418	.2003	.0588	.9174	.7759	.6345	.4930	.3516	.2101	.9272	.6443	.3614
429275	33.4835	34.3420	35.2006	36.0591	36.9177	37.7762	38.6348	39.4933	40.3519	41.2104	42.9275	44.6446	46.3617
278	.4837	.3422	.2008	.0594	.9179	.7765	.6350	.4936	.3521	.2107	.9278	.6449	.3620
281	.4839	.3425	.2010	.0596	.9182	.7767	.6353	.4939	.3524	.2110	.9281	.6452	.3623
284	.4842	.3427	.2013	.0599	.9184	.7770	.6356	.4941	.3527	.2113	.9284	.6455	.3627
287	.4844	.3430	.2015	.0601	.9187	.7773	.6358	.4944	.3530	.2116	.9287	.6458	.3630
429290	33.4846	34.3432	35.2018	36.0604	36.9189	37.7775	38.6361	39.4947	40.3533	41.2118	42.9290	44.6462	46.3633
293	.4849	.3434	.2020	.0606	.9192	.7778	.6364	.4950	.3535	.2121	.9293	.6465	.3636
296	.4851	.3437	.2023	.0609	.9195	.7780	.6366	.4952	.3538	.2124	.9296	.6468	.3640
299	.4853	.3439	.2025	.0611	.9197	.7783	.6369	.4955	.3541	.2127	.9299	.6471	.3643
302	.4856	.3442	.2028	.0614	.9200	.7786	.6372	.4958	.3544	.2130	.9302	.6474	.3646
429305	33.4858	34.3444	35.2030	36.0616	36.9202	37.7788	38.6375	39.4961	40.3547	41.2133	42.9305	44.6477	46.3649
308	.4860	.3446	.2033	.0619	.9205	.7791	.6377	.4963	.3550	.2136	.9308	.6480	.3653
311	.4863	.3449	.2035	.0621	.9207	.7794	.6380	.4966	.3552	.2139	.9311	.6483	.3656
314	.4865	.3451	.2037	.0624	.9210	.7796	.6383	.4969	.3555	.2141	.9314	.6487	.3659
317	.4867	.3454	.2040	.0626	.9213	.7799	.6385	.4972	.3558	.2144	.9317	.6490	.3662
429320	33.4870	34.3456	35.2042	36.0629	36.9215	37.7802	38.6388	39.4974	40.3561	41.2147	42.9320	44.6493	46.3666
323	.4872	.3458	.2045	.0631	.9218	.7804	.6391	.4977	.3564	.2150	.9323	.6496	.3669
326	.4874	.3461	.2047	.0634	.9220	.7807	.6393	.4980	.3566	.2153	.9326	.6499	.3672
329	.4877	.3463	.2050	.0636	.9223	.7810	.6396	.4983	.3569	.2156	.9329	.6502	.3675
332	.4879	.3466	.2052	.0639	.9226	.7812	.6399	.4985	.3572	.2159	.9332	.6505	.3679
429335	33.4881	34.3468	35.2055	36.0641	36.9228	37.7815	38.6402	39.4988	40.3575	41.2162	42.9335	44.6508	46.3682
338	.4884	.3470	.2057	.0644	.9231	.7817	.6404	.4991	.3578	.2164	.9338	.6512	.3685
341	.4886	.3473	.2060	.0646	.9233	.7820	.6407	.4994	.3581	.2167	.9341	.6515	.3688
344	.4888	.3475	.2062	.0649	.9236	.7823	.6410	.4996	.3583	.2170	.9344	.6518	.3692
347	.4891	.3478	.2065	.0651	.9238	.7825	.6412	.4999	.3586	.2173	.9347	.6521	.3695
429350	33.4893	34.3480	35.2067	36.0654	36.9241	37.7828	38.6415	39.5002	40.3589	41.2176	42.9350	44.6524	46.3698
353	.4895	.3482	.2069	.0657	.9244	.7831	.6418	.5005	.3592	.2179	.9353	.6527	.3701
356	.4898	.3485	.2072	.0659	.9246	.7833	.6420	.5008	.3595	.2182	.9356	.6530	.3704
359	.4900	.3487	.2074	.0662	.9249	.7836	.6423	.5010	.3597	.2185	.9359	.6533	.3708
362	.4902	.3490	.2077	.0664	.9251	.7839	.6426	.5013	.3600	.2188	.9362	.6536	.3711
429365	33.4905	34.3492	35.2079	36.0667	36.9254	37.7841	38.6429	39.5016	40.3603	41.2190	42.9365	44.6540	46.3714
368	.4907	.3494	.2082	.0669	.9256	.7844	.6431	.5019	.3606	.2193	.9368	.6543	.3717
371	.4909	.3497	.2084	.0672	.9259	.7846	.6434	.5021	.3609	.2196	.9371	.6546	.3721
374	.4912	.3499	.2087	.0674	.9262	.7849	.6437	.5024	.3612	.2199	.9374	.6549	.3724
377	.4914	.3502	.2089	.0677	.9264	.7852	.6439	.5027	.3614	.2202	.9377	.6552	.3727
429380	33.4916	34.3504	35.2092	36.0679	36.9267	37.7854	38.6442	39.5030	40.3617	41.2205	42.9380	44.6555	46.3730
383	.4919	.3506	.2094	.0682	.9269	.7857	.6445	.5032	.3620	.2208	.9383	.6558	.3734
386	.4921	.3509	.2097	.0684	.9272	.7860	.6447	.5035	.3623	.2211	.9386	.6561	.3737
389	.4923	.3511	.2099	.0687	.9275	.7862	.6450	.5038	.3626	.2213	.9389	.6565	.3740
392	.4926	.3514	.2101	.0689	.9277	.7865	.6453	.5041	.3628	.2216	.9392	.6568	.3743
429395	33.4928	34.3516	35.2104	36.0692	36.9280	37.7868	38.6456	39.5043	40.3631	41.2219	42.9395	44.6571	46.3747
398	.4930	.3518	.2106	.0694	.9282	.7870	.6458	.5046	.3634	.2222	.9398	.6574	.3750
401	.4933	.3521	.2109	.0697	.9285	.7873	.6461	.5049	.3637	.2225	.9401	.6577	.3753
404	.4935	.3523	.2111	.0699	.9287	.7876	.6464	.5052	.3640	.2228	.9404	.6580	.3756
407	.4937	.3526	.2114	.0702	.9290	.7878	.6466	.5054	.3643	.2231	.9407	.6583	.3760
429410	33.4940	34.3528	35.2116	36.0704	36.9293	37.7881	38.6469	39.5057	40.3645	41.2234	42.9410	44.6586	46.3763
413	.4942	.3530	.2119	.0707	.9295	.7883	.6472	.5060	.3648	.2236	.9413	.6590	.3766
416	.4944	.3533	.2121	.0709	.9298	.7886	.6474	.5063	.3651	.2239	.9416	.6593	.3769
419	.4947	.3535	.2124	.0712	.9300	.7889	.6477	.5065	.3654	.2242	.9419	.6596	.3773
422	.4949	.3538	.2126	.0714	.9303	.7891	.6480	.5068	.3657	.2245	.9422	.6599	.3776
429425	33.4952	34.3540	35.2129	36.0717	36.9306	37.7894	38.6483	39.5071	40.3660	41.2248	42.9425	44.6602	46.3779
428	.4954	.3542	.2131	.0720	.9308	.7897	.6485	.5074	.3662	.2251	.9428	.6605	.3782
431	.4956	.3545	.2133	.0722	.9311	.7899	.6488	.5077	.3665	.2254	.9431	.6608	.3785
434	.4959	.3547	.2136	.0725	.9313	.7902	.6491	.5079	.3668	.2257	.9434	.6611	.3789
437	.4961	.3550	.2138	.0727	.9316	.7905	.6493	.5082	.3671	.2260	.9437	.6614	.3792
429440	33.4963	34.3552	35.2141	36.0730	36.9318	37.7907	38.6496	39.5085	40.3674	41.2262	42.9440	44.6618	46.3795
443	.4966	.3554	.2143	.0732	.9321	.7910	.6499	.5088	.3676	.2265	.9443	.6621	.3798
446	.4968	.3557	.2146	.0735	.9324	.7912	.6501	.5090	.3679	.2268	.9446	.6624	.3802
449	.4970	.3559	.2148	.0737	.9326	.7915	.6504	.5093	.3682	.2271	.9449	.6627	.3805
452	.4973	.3562	.2151	.0740	.9329	.7918	.6507	.5096	.3685	.2274	.9452	.6630	.3808
429455	33.4975	34.3564	35.2153	36.0742	36.9331	37.7920	38.6510	39.5099	40.3688	41.2277	42.9455	44.6633	46.3811
458	.4977	.3566	.2156	.0745	.9334	.7923	.6512	.5101	.3691	.2280	.9458	.6636	.3815
461	.4980	.3569	.2158	.0747	.9336	.7926	.6515	.5104	.3693	.2283	.9461	.6639	.3818
464	.4982	.3571	.2160	.0750	.9339	.7928	.6518	.5107	.3696	.2285	.9464	.6643	.3821
467	.4984	.3574	.2163	.0752	.9342	.7931	.6520	.5110	.3699	.2288	.9467	.6646	.3824
429470	33.4987	34.3576	35.2165	36.0755	36.9344	37.7934	38.6523	39.5112	40.3702	41.2291	42.9470	44.6649	46.3828
473	.4989	.3578	.2168	.0757	.9347	.7936	.6526	.5115	.3705	.2294	.9473	.6652	.3831
476	.4991	.3581	.2170	.0760	.9349	.7939	.6528	.5118	.3707	.2297	.9476	.6655	.3834
479	.4994	.3583	.2173	.0762	.9352	.7942	.6531	.5121	.3710	.2300	.9479	.6658	.3837
482	.4996	.3586	.2175	.0765	.9355	.7944	.6534	.5123	.3713	.2303	.9482	.6661	.3841
429485	33.4998	34.3588	35.2178	36.0767	36.9357	37.7947	38.6537	39.5126	40.3716	41.2306	42.9485	44.6664	46.3844
488	.5001	.3590	.2180	.0770	.9360	.7949	.6539	.5129	.3719	.2308	.9488	.6668	.3847
491	.5003	.3593	.2183	.0772	.9362	.7952	.6542	.5132	.3722	.2311	.9491	.6671	.3850
494	.5005	.3595	.2185	.0775	.9365	.7955	.6545	.5134	.3724	.2314	.9494	.6674	.3854
497	.5008	.3598	.2188	.0777	.9367	.7957	.6547	.5137	.3727	.2317	.9497	.6677	.3857
429500	33.5010	34.3600	35.2190	36.0780	36.9370	37.7960	38.6550	39.5140	40.3730	41.2320	42.9500	44.6680	46.3860

H A R M O N I C S

BASIC FREQ.	52	54	56	58	60	62	64	66	68	70	72	74	76
429500	22.3340	23.1930	24.0520	24.9110	25.7700	26.6290	27.4880	28.3470	29.2060	30.0650	30.9240	31.7830	32.6420
503	.3342	.1932	.0522	.9112	.7702	.6292	.4882	.3472	.2062	.0652	.9242	.7832	.6422
506	.3343	.1933	.0523	.9113	.7704	.6294	.4884	.3474	.2064	.0654	.9244	.7834	.6425
509	.3345	.1935	.0525	.9115	.7705	.6296	.4886	.3476	.2066	.0656	.9246	.7837	.6427
512	.3346	.1936	.0527	.9117	.7707	.6297	.4888	.3478	.2068	.0658	.9249	.7839	.6429
429515	22.3348	23.1938	24.0528	24.9119	25.7709	26.6299	27.4890	28.3480	29.2070	30.0661	30.9251	31.7841	32.6431
518	.3349	.1940	.0530	.9120	.7711	.6301	.4892	.3482	.2072	.0663	.9253	.7843	.6434
521	.3351	.1941	.0532	.9122	.7713	.6303	.4893	.3484	.2074	.0665	.9255	.7846	.6436
524	.3352	.1943	.0533	.9124	.7714	.6305	.4895	.3486	.2076	.0667	.9257	.7848	.6438
527	.3354	.1945	.0535	.9126	.7716	.6307	.4897	.3488	.2078	.0669	.9259	.7850	.6441
429530	22.3356	23.1946	24.0537	24.9127	25.7718	26.6309	27.4899	28.3490	29.2080	30.0671	30.9262	31.7852	32.6443
533	.3357	.1948	.0538	.9129	.7720	.6310	.4901	.3492	.2082	.0673	.9264	.7854	.6445
536	.3359	.1949	.0540	.9131	.7722	.6312	.4903	.3494	.2084	.0675	.9266	.7857	.6447
539	.3360	.1951	.0542	.9133	.7723	.6314	.4905	.3496	.2087	.0677	.9268	.7859	.6450
542	.3362	.1953	.0544	.9134	.7725	.6316	.4907	.3498	.2089	.0679	.9270	.7861	.6452
429545	22.3363	23.1954	24.0545	24.9136	25.7727	26.6318	27.4909	28.3500	29.2091	30.0682	30.9272	31.7863	32.6454
548	.3365	.1956	.0547	.9138	.7729	.6320	.4911	.3502	.2093	.0684	.9275	.7866	.6456
551	.3367	.1958	.0549	.9140	.7731	.6322	.4913	.3504	.2095	.0686	.9277	.7868	.6459
554	.3368	.1959	.0550	.9141	.7732	.6323	.4915	.3506	.2097	.0688	.9279	.7870	.6461
557	.3370	.1961	.0552	.9143	.7734	.6325	.4916	.3508	.2099	.0690	.9281	.7872	.6463
429560	22.3371	23.1962	24.0554	24.9145	25.7736	26.6327	27.4918	28.3510	29.2101	30.0692	30.9283	31.7874	32.6466
563	.3373	.1964	.0555	.9147	.7738	.6329	.4920	.3512	.2103	.0694	.9285	.7877	.6468
566	.3374	.1966	.0557	.9148	.7740	.6331	.4922	.3514	.2105	.0696	.9288	.7879	.6470
569	.3376	.1967	.0559	.9150	.7741	.6333	.4924	.3516	.2107	.0698	.9290	.7881	.6472
572	.3377	.1969	.0560	.9152	.7743	.6335	.4926	.3518	.2109	.0700	.9292	.7883	.6475
429575	22.3379	23.1971	24.0562	24.9154	25.7745	26.6337	27.4928	28.3520	29.2111	30.0703	30.9294	31.7886	32.6477
578	.3381	.1972	.0564	.9155	.7747	.6338	.4930	.3521	.2113	.0705	.9296	.7888	.6479
581	.3382	.1974	.0565	.9157	.7749	.6340	.4932	.3523	.2115	.0707	.9298	.7890	.6482
584	.3384	.1975	.0567	.9159	.7750	.6342	.4934	.3525	.2117	.0709	.9300	.7892	.6484
587	.3385	.1977	.0569	.9160	.7752	.6344	.4936	.3527	.2119	.0711	.9303	.7894	.6486
429590	22.3387	23.1979	24.0570	24.9162	25.7754	26.6346	27.4938	28.3529	29.2121	30.0713	30.9305	31.7897	32.6488
593	.3388	.1980	.0572	.9164	.7756	.6348	.4940	.3531	.2123	.0715	.9307	.7899	.6491
596	.3390	.1982	.0574	.9166	.7758	.6350	.4941	.3533	.2125	.0717	.9309	.7901	.6493
599	.3391	.1983	.0575	.9167	.7759	.6351	.4943	.3535	.2127	.0719	.9311	.7903	.6495
602	.3393	.1985	.0577	.9169	.7761	.6353	.4945	.3537	.2129	.0721	.9313	.7905	.6498
429605	22.3395	23.1987	24.0579	24.9171	25.7763	26.6355	27.4947	28.3539	29.2131	30.0724	30.9316	31.7908	32.6500
608	.3396	.1988	.0580	.9173	.7765	.6357	.4949	.3541	.2133	.0726	.9318	.7910	.6502
611	.3398	.1990	.0582	.9174	.7767	.6359	.4951	.3543	.2135	.0728	.9320	.7912	.6504
614	.3399	.1992	.0584	.9176	.7768	.6361	.4953	.3545	.2138	.0730	.9322	.7914	.6507
617	.3401	.1993	.0586	.9178	.7770	.6363	.4955	.3547	.2140	.0732	.9324	.7917	.6509
429620	22.3402	23.1995	24.0587	24.9180	25.7772	26.6364	27.4957	28.3549	29.2142	30.0734	30.9326	31.7919	32.6511
623	.3404	.1996	.0589	.9181	.7774	.6366	.4959	.3551	.2144	.0736	.9329	.7921	.6513
626	.3406	.1998	.0591	.9183	.7776	.6368	.4961	.3553	.2146	.0738	.9331	.7923	.6516
629	.3407	.2000	.0592	.9185	.7777	.6370	.4963	.3555	.2148	.0740	.9333	.7925	.6518
632	.3409	.2001	.0594	.9187	.7779	.6372	.4964	.3557	.2150	.0742	.9335	.7928	.6520
429635	22.3410	23.2003	24.0596	24.9188	25.7781	26.6374	27.4966	28.3559	29.2152	30.0745	30.9337	31.7930	32.6523
638	.3412	.2005	.0597	.9190	.7783	.6376	.4968	.3561	.2154	.0747	.9339	.7932	.6525
641	.3413	.2006	.0599	.9192	.7785	.6377	.4970	.3563	.2156	.0749	.9342	.7934	.6527
644	.3415	.2008	.0601	.9194	.7786	.6379	.4972	.3565	.2158	.0751	.9344	.7937	.6529
647	.3416	.2009	.0602	.9195	.7788	.6381	.4974	.3567	.2160	.0753	.9346	.7939	.6532
429650	22.3418	23.2011	24.0604	24.9197	25.7790	26.6383	27.4976	28.3569	29.2162	30.0755	30.9348	31.7941	32.6534
653	.3420	.2013	.0606	.9199	.7792	.6385	.4978	.3571	.2164	.0757	.9350	.7943	.6536
656	.3421	.2014	.0607	.9200	.7794	.6387	.4980	.3573	.2166	.0759	.9352	.7945	.6539
659	.3423	.2016	.0609	.9202	.7795	.6389	.4982	.3575	.2168	.0761	.9354	.7948	.6541
662	.3424	.2017	.0611	.9204	.7797	.6390	.4984	.3577	.2170	.0763	.9357	.7950	.6543
429665	22.3426	23.2019	24.0612	24.9206	25.7799	26.6392	27.4986	28.3579	29.2172	30.0766	30.9359	31.7952	23.6545
668	.3427	.2021	.0614	.9207	.7801	.6394	.4988	.3581	.2174	.0768	.9361	.7954	.6548
671	.3429	.2022	.0616	.9209	.7803	.6396	.4989	.3583	.2176	.0770	.9363	.7957	.6550
674	.3430	.2024	.0617	.9211	.7804	.6398	.4991	.3585	.2178	.0772	.9365	.7959	.6552
677	.3432	.2026	.0619	.9213	.7806	.6400	.4993	.3587	.2180	.0774	.9367	.7961	.6555
429680	22.3434	23.2027	24.0621	24.9214	25.7808	26.6402	27.4995	28.3589	29.2182	30.0776	30.9370	31.7963	32.6557
683	.3435	.2029	.0622	.9216	.7810	.6403	.4997	.3591	.2184	.0778	.9372	.7965	.6559
686	.3437	.2030	.0624	.9218	.7812	.6405	.4999	.3593	.2186	.0780	.9374	.7968	.6561
689	.3438	.2032	.0626	.9220	.7813	.6407	.5001	.3595	.2189	.0782	.9376	.7970	.6564
692	.3440	.2034	.0628	.9221	.7815	.6409	.5003	.3597	.2191	.0784	.9378	.7972	.6566
429695	22.3441	23.2035	24.0629	24.9223	25.7817	26.6411	27.5005	28.3599	29.2193	30.0787	30.9380	31.7974	32.6568
698	.3443	.2037	.0631	.9225	.7819	.6413	.5007	.3601	.2195	.0789	.9383	.7977	.6570
701	.3445	.2039	.0633	.9227	.7821	.6415	.5009	.3603	.2197	.0791	.9385	.7979	.6573
704	.3446	.2040	.0634	.9228	.7822	.6416	.5011	.3605	.2199	.0793	.9387	.7981	.6575
707	.3448	.2042	.0636	.9230	.7824	.6418	.5012	.3607	.2201	.0795	.9389	.7983	.6577
429710	22.3449	23.2043	24.0638	24.9232	25.7826	26.6420	27.5014	28.3609	29.2203	30.0797	30.9391	31.7985	32.6580
713	.3451	.2045	.0639	.9234	.7828	.6422	.5016	.3611	.2205	.0799	.9393	.7988	.6582
716	.3452	.2047	.0641	.9235	.7830	.6424	.5018	.3613	.2207	.0801	.9396	.7990	.6584
719	.3454	.2048	.0643	.9237	.7831	.6426	.5020	.3615	.2209	.0803	.9398	.7992	.6586
722	.3455	.2050	.0644	.9239	.7833	.6428	.5022	.3617	.2211	.0805	.9400	.7994	.6589
429725	22.3457	23.2052	24.0646	24.9241	25.7835	26.6430	27.5024	28.3619	29.2213	30.0808	30.9402	31.7997	32.6591
728	.3459	.2053	.0648	.9242	.7837	.6431	.5026	.3620	.2215	.0810	.9404	.7999	.6593
731	.3460	.2055	.0649	.9244	.7839	.6433	.5028	.3622	.2217	.0812	.9406	.8001	.6596
734	.3462	.2056	.0651	.9246	.7840	.6435	.5030	.3624	.2219	.0814	.9408	.8003	.6598
737	.3463	.2058	.0653	.9247	.7842	.6437	.5032	.3626	.2221	.0816	.9411	.8005	.6600
429740	22.3465	23.2060	24.0654	24.9249	25.7844	26.6439	27.5034	28.3628	29.2223	30.0818	30.9413	31.8008	32.6602
743	.3466	.2061	.0656	.9251	.7846	.6441	.5036	.3630	.2225	.0820	.9415	.8010	.6605
746	.3468	.2063	.0658	.9253	.7848	.6443	.5037	.3632	.2227	.0822	.9417	.8012	.6607
749	.3469	.2064	.0659	.9254	.7849	.6444	.5039	.3634	.2229	.0824	.9419	.8014	.6609
752	.3471	.2066	.0661	.9256	.7851	.6446	.5041	.3636	.2231	.0826	.9421	.8016	.6612
429755	22.3473	23.2068	24.0663	24.9258	25.7853	26.6448	27.5043	28.3638	29.2233	30.0829	30.9424	31.8019	32.6614
758	.3474	.2069	.0664	.9260	.7855	.6450	.5045	.3640	.2235	.0831	.9426	.8021	.6616
761	.3476	.2071	.0666	.9261	.7857	.6452	.5047	.3642	.2237	.0833	.9428	.8023	.6618
764	.3477	.2073	.0668	.9263	.7858	.6454	.5049	.3644	.2240	.0835	.9430	.8025	.6621
767	.3479	.2074	.0670	.9265	.7860	.6456	.5051	.3646	.2242	.0837	.9432	.8028	.6623
429770	22.3480	23.2076	24.0671	24.9267	25.7862	26.6457	27.5053	28.3648	29.2244	30.0839	30.9434	31.8030	32.6625
773	.3482	.2077	.0673	.9268	.7864	.6459	.5055	.3650	.2246	.0841	.9437	.8032	.6627
776	.3484	.2079	.0675	.9270	.7866	.6461	.5057	.3652	.2248	.0843	.9439	.8034	.6630
779	.3485	.2081	.0676	.9272	.7867	.6463	.5059	.3654	.2250	.0845	.9441	.8036	.6632
782	.3487	.2082	.0678	.9274	.7869	.6465	.5060	.3656	.2252	.0847	.9443	.8039	.6634
429785	22.3488	23.2084	24.0680	24.9275	25.7871	26.6467	27.5062	28.3658	29.2254	30.0850	30.9445	31.8041	32.6637
788	.3490	.2086	.0681	.9277	.7873	.6469	.5064	.3660	.2256	.0852	.9447	.8043	.6639
791	.3491	.2087	.0683	.9279	.7875	.6470	.5066	.3662	.2258	.0854	.9450	.8045	.6641
794	.3493	.2089	.0685	.9281	.7876	.6472	.5068	.3664	.2260	.0856	.9452	.8048	.6643
797	.3494	.2090	.0686	.9282	.7878	.6474	.5070	.3666	.2262	.0858	.9454	.8050	.6646
429800	22.3496	23.2092	24.0688	24.9284	25.7880	26.6476	27.5072	28.3668	29.2264	30.0860	30.9456	31.8052	32.6648

MEGACYCLES PER SECOND

BASIC FREQ.	HARMONICS 78	80	82	84	86	88	90	92	94	96	100	104	108
429500	33.5010	34.3600	35.2190	36.0780	36.9370	37.7960	38.6550	39.5140	40.3730	41.2320	42.9500	44.6680	46.3860
503	.5012	.3602	.2192	.0783	.9373	.7963	.6553	.5143	.3733	.2323	.9503	.6683	.3863
506	.5015	.3605	.2195	.0785	.9375	.7965	.6555	.5146	.3736	.2326	.9506	.6686	.3866
509	.5017	.3607	.2197	.0788	.9378	.7968	.6558	.5148	.3738	.2329	.9509	.6689	.3870
512	.5019	.3610	.2200	.0790	.9380	.7971	.6561	.5151	.3741	.2332	.9512	.6692	.3873
429515	33.5022	34.3612	35.2202	36.0793	36.9383	37.7973	38.6564	39.5154	40.3744	41.2334	42.9515	44.6696	46.3876
518	.5024	.3614	.2205	.0795	.9385	.7976	.6566	.5157	.3747	.2337	.9518	.6699	.3879
521	.5026	.3617	.2207	.0798	.9388	.7978	.6569	.5159	.3750	.2340	.9521	.6702	.3883
524	.5029	.3619	.2210	.0800	.9391	.7981	.6572	.5162	.3753	.2343	.9524	.6705	.3886
527	.5031	.3622	.2212	.0803	.9393	.7984	.6574	.5165	.3755	.2346	.9527	.6708	.3889
429530	33.5033	34.3624	35.2215	36.0805	36.9396	37.7986	38.6577	39.5168	40.3758	41.2349	42.9530	44.6711	46.3892
533	.5036	.3626	.2217	.0808	.9398	.7989	.6580	.5170	.3761	.2352	.9533	.6714	.3896
536	.5038	.3629	.2220	.0810	.9401	.7992	.6582	.5173	.3764	.2355	.9536	.6717	.3899
539	.5040	.3631	.2222	.0813	.9404	.7994	.6585	.5176	.3767	.2357	.9539	.6721	.3902
542	.5043	.3634	.2224	.0815	.9406	.7997	.6588	.5179	.3769	.2360	.9542	.6724	.3905
429545	33.5045	34.3636	35.2227	36.0818	36.9409	37.8000	38.6591	39.5181	40.3772	41.2363	42.9545	44.6727	46.3909
548	.5047	.3638	.2229	.0820	.9411	.8002	.6593	.5184	.3775	.2366	.9548	.6730	.3912
551	.5050	.3641	.2232	.0823	.9414	.8005	.6596	.5187	.3778	.2369	.9551	.6733	.3915
554	.5052	.3643	.2234	.0825	.9416	.8008	.6599	.5190	.3781	.2372	.9554	.6736	.3918
557	.5054	.3646	.2237	.0828	.9419	.8010	.6601	.5192	.3784	.2375	.9557	.6739	.3922
429560	33.5057	34.3648	35.2239	36.0830	36.9422	37.8013	38.6604	39.5195	40.3786	41.2378	42.9560	44.6742	46.3925
563	.5059	.3650	.2242	.0833	.9424	.8015	.6607	.5198	.3789	.2380	.9563	.6746	.3928
566	.5061	.3653	.2244	.0835	.9427	.8018	.6609	.5201	.3792	.2383	.9566	.6749	.3931
569	.5064	.3655	.2247	.0838	.9429	.8021	.6612	.5203	.3795	.2386	.9569	.6752	.3935
572	.5066	.3658	.2249	.0840	.9432	.8023	.6615	.5206	.3798	.2389	.9572	.6755	.3938
429575	33.5069	34.3660	35.2252	36.0843	36.9435	37.8026	38.6618	39.5209	40.3801	41.2392	42.9575	44.6758	46.3941
578	.5071	.3662	.2254	.0846	.9437	.8029	.6620	.5212	.3803	.2395	.9578	.6761	.3944
581	.5073	.3665	.2256	.0848	.9440	.8031	.6623	.5215	.3806	.2398	.9581	.6764	.3947
584	.5076	.3667	.2259	.0851	.9442	.8034	.6626	.5217	.3809	.2401	.9584	.6767	.3951
587	.5078	.3670	.2261	.0853	.9445	.8037	.6628	.5220	.3812	.2404	.9587	.6770	.3954
429590	33.5080	34.3672	35.2264	36.0856	36.9447	37.8039	38.6631	39.5223	40.3815	41.2406	42.9590	44.6774	46.3957
593	.5083	.3674	.2266	.0858	.9450	.8042	.6634	.5226	.3817	.2409	.9593	.6777	.3960
596	.5085	.3677	.2269	.0861	.9453	.8044	.6636	.5228	.3820	.2412	.9596	.6780	.3964
599	.5087	.3679	.2271	.0863	.9455	.8047	.6639	.5231	.3823	.2415	.9599	.6783	.3967
602	.5090	.3682	.2274	.0866	.9458	.8050	.6642	.5234	.3826	.2418	.9602	.6786	.3970
429605	33.5092	34.3684	35.2276	36.0868	36.9460	37.8052	38.6645	39.5237	40.3829	41.2421	42.9605	44.6789	46.3973
608	.5094	.3686	.2279	.0871	.9463	.8055	.6647	.5239	.3832	.2424	.9608	.6792	.3977
611	.5097	.3689	.2281	.0873	.9465	.8058	.6650	.5242	.3834	.2427	.9611	.6795	.3980
614	.5099	.3691	.2283	.0876	.9468	.8060	.6653	.5245	.3837	.2429	.9614	.6799	.3983
617	.5101	.3694	.2286	.0878	.9471	.8063	.6655	.5248	.3840	.2432	.9617	.6802	.3986
429620	33.5104	34.3696	35.2288	36.0881	36.9473	37.8066	38.6658	39.5250	40.3843	41.2435	42.9620	44.6805	46.3990
623	.5106	.3698	.2291	.0883	.9476	.8068	.6661	.5253	.3846	.2438	.9623	.6808	.3993
626	.5108	.3701	.2293	.0886	.9478	.8071	.6663	.5256	.3848	.2441	.9626	.6811	.3996
629	.5111	.3703	.2296	.0888	.9481	.8074	.6666	.5259	.3851	.2444	.9629	.6814	.3999
632	.5113	.3706	.2298	.0891	.9484	.8076	.6669	.5261	.3854	.2447	.9632	.6817	.4003
429635	33.5115	34.3708	35.2301	36.0893	36.9486	37.8079	38.6672	39.5264	40.3857	41.2450	42.9635	44.6820	46.4006
638	.5118	.3710	.2303	.0896	.9489	.8081	.6674	.5267	.3860	.2452	.9638	.6824	.4009
641	.5120	.3713	.2306	.0898	.9491	.8084	.6677	.5270	.3863	.2455	.9641	.6827	.4012
644	.5122	.3715	.2308	.0901	.9494	.8087	.6680	.5272	.3865	.2458	.9644	.6830	.4016
647	.5125	.3718	.2311	.0903	.9496	.8089	.6682	.5275	.3868	.2461	.9647	.6833	.4019
429650	33.5127	34.3720	35.2313	36.0906	36.9499	37.8092	38.6685	39.5278	40.3871	41.2464	42.9650	44.6836	46.4022
653	.5129	.3722	.2315	.0909	.9502	.8095	.6688	.5281	.3874	.2467	.9653	.6839	.4025
656	.5132	.3725	.2318	.0911	.9504	.8097	.6690	.5284	.3877	.2470	.9656	.6842	.4028
659	.5134	.3727	.2320	.0914	.9507	.8100	.6693	.5286	.3879	.2473	.9659	.6845	.4032
662	.5136	.3730	.2323	.0916	.9509	.8103	.6696	.5289	.3882	.2476	.9662	.6848	.4035
429665	33.5139	34.3732	35.2325	36.0919	36.9512	37.8105	38.6699	39.5292	40.3885	41.2478	42.9665	44.6852	46.4038
668	.5141	.3734	.2328	.0921	.9514	.8108	.6701	.5295	.3888	.2481	.9668	.6855	.4041
671	.5143	.3737	.2330	.0924	.9517	.8110	.6704	.5297	.3891	.2484	.9671	.6858	.4045
674	.5146	.3739	.2333	.0926	.9520	.8113	.6707	.5300	.3984	.2487	.9674	.6861	.4048
677	.5148	.3742	.2335	.0929	.9522	.8116	.6709	.5303	.3896	.2490	.9677	.6864	.4051
429680	33.5150	34.3744	35.2338	36.0931	36.9525	37.8118	38.6712	39.5306	40.3899	41.2493	42.9680	44.6867	46.4054
683	.5153	.3746	.2340	.0934	.9527	.8121	.6715	.5308	.3902	.2496	.9683	.6870	.4058
686	.5155	.3749	.2343	.0936	.9530	.8124	.6717	.5311	.3905	.2499	.9686	.6873	.4061
689	.5157	.3751	.2345	.0939	.9533	.8126	.6720	.5314	.3908	.2501	.9689	.6877	.4064
692	.5160	.3754	.2347	.0941	.9535	.8129	.6723	.5317	.3910	.2504	.9692	.6880	.4067
429695	33.5162	34.3756	35.2350	36.0944	36.9538	37.8132	38.6726	39.5319	40.3913	41.2507	42.9695	44.6883	46.4071
698	.5164	.3758	.2352	.0946	.9540	.8134	.6728	.5322	.3916	.2510	.9698	.6886	.4074
701	.5167	.3761	.2355	.0949	.9543	.8137	.6731	.5325	.3919	.2513	.9701	.6889	.4077
704	.5169	.3763	.2357	.0951	.9545	.8140	.6734	.5328	.3922	.2516	.9704	.6892	.4080
707	.5171	.3766	.2360	.0954	.9548	.8142	.6736	.5330	.3925	.2519	.9707	.6895	.4084
429710	33.5174	34.3768	35.2362	36.0956	36.9551	37.8145	38.6739	39.5333	40.3927	41.2522	42.9710	44.6898	46.4087
713	.5176	.3770	.2365	.0959	.9553	.8147	.6742	.5336	.3930	.2524	.9713	.6902	.4090
716	.5178	.3773	.2367	.0961	.9556	.8150	.6744	.5339	.3933	.2527	.9716	.6905	.4093
719	.5181	.3775	.2370	.0964	.9558	.8153	.6747	.5341	.3936	.2530	.9719	.6908	.4097
722	.5183	.3778	.2372	.0966	.9561	.8155	.6750	.5344	.3939	.2533	.9722	.6911	.4100
429725	33.5186	34.3780	35.2375	36.0969	36.9564	37.8158	38.6753	39.5347	40.3942	41.2536	42.9725	44.6914	46.4103
728	.5188	.3782	.2377	.0972	.9566	.8161	.6755	.5350	.3944	.2539	.9728	.6917	.4106
731	.5190	.3785	.2379	.0974	.9569	.8163	.6758	.5353	.3947	.2542	.9731	.6920	.4109
734	.5193	.3787	.2382	.0977	.9571	.8166	.6761	.5355	.3950	.2545	.9734	.6923	.4113
737	.5195	.3790	.2384	.0979	.9574	.8169	.6763	.5358	.3953	.2548	.9737	.6926	.4116
429740	33.5197	34.3792	35.2387	36.0982	36.9576	37.8171	38.6766	39.5361	40.3956	41.2550	42.9740	44.6930	46.4119
743	.5200	.3794	.2389	.0984	.9579	.8174	.6769	.5364	.3958	.2553	.9743	.6933	.4122
746	.5202	.3797	.2392	.0987	.9582	.8176	.6771	.5366	.3961	.2556	.9746	.6936	.4126
749	.5204	.3799	.2394	.0989	.9584	.8179	.6774	.5369	.3964	.2559	.9749	.6939	.4129
752	.5207	.3802	.2397	.0992	.9587	.8182	.6777	.5372	.3967	.2562	.9752	.6942	.4132
429755	33.5209	34.3804	35.2399	36.0994	36.9589	37.8184	38.6780	39.5375	40.3970	41.2565	42.9755	44.6945	46.4135
758	.5211	.3806	.2402	.0997	.9592	.8187	.6782	.5377	.3973	.2568	.9758	.6948	.4139
761	.5214	.3809	.2404	.0999	.9594	.8190	.6785	5380	.3975	.2571	.9761	.6951	.4142
764	.5216	.3811	.2406	.1002	.9597	.8192	.6788	.5383	.3978	.2573	.9764	.6955	.4145
767	.5218	.3814	.2409	.1004	.9600	.8195	.6790	.5386	.3981	.2576	.9767	.6958	.4148
429770	33.5221	34.3816	35.2411	36.1007	36.9602	37.8198	38.6793	39.5388	40.3984	41.2579	42.9770	44.6961	46.4152
773	.5223	.3818	.2414	.1009	.9605	.8200	.6796	.5391	.3987	.2582	.9773	.6964	.4155
776	.5225	.3821	.2416	.1012	.9607	.8203	.6798	.5394	.3989	.2585	.9776	.6967	.4158
779	.5228	.3823	.2419	.1014	.9610	.8206	.6801	.5397	.3992	.2588	.9779	.6970	.4161
782	.5230	.3826	.2421	.1017	.9613	.8208	.6804	.5399	.3995	.2591	.9782	.6973	.4165
429785	33.5232	34.3828	35.2424	36.1019	36.9615	37.8211	38.6807	39.5402	40.3998	41.2594	42.9785	44.6976	46.4168
788	.5235	.3830	.2426	.1022	.9618	.8213	.6809	.5405	.4001	.2596	.9788	.6980	.4171
791	.5237	.3833	.2429	.1024	.9620	.8216	.6812	.5408	.4004	.2599	.9791	.6983	.4174
794	.5239	.3835	.2431	.1027	.9623	.8219	.6815	.5410	.4006	.2602	.9794	.6986	.4178
797	.5242	.3838	.2434	.1029	.9625	.8221	.6817	.5413	.4009	.2605	.9797	.6989	.4181
429800	33.5244	34.3840	35.2436	36.1032	36.9628	37.8224	38.6820	39.5416	40.4012	41.2608	42.9800	44.6992	46.4184

MEGACYCLES PER SECOND

HARMONICS

BASIC FREQ.	52	54	56	58	60	62	64	66	68	70	72	74	76
429800	22.3496	23.2092	24.0688	24.9284	25.7880	26.6476	27.5072	28.3668	29.2264	30.0860	30.9456	31.8052	32.6648
803	.3498	.2094	.0690	.9286	.7882	.6478	.5074	.3670	.2266	.0862	.9458	.8054	.6650
806	.3499	.2095	.0691	.9287	.7884	.6480	.5076	.3672	.2268	.0864	.9460	.8056	.6653
809	.3501	.2097	.0693	.9289	.7885	.6482	.5078	.3674	.2270	.0866	.9462	.8059	.6655
812	.3502	.2098	.0695	.9291	.7887	.6483	.5080	.3676	.2272	.0868	.9465	.8061	.6657
429815	22.3504	23.2100	24.0696	24.9293	25.7889	26.6485	27.5082	28.3678	29.2274	30.0871	30.9467	31.8063	32.6659
818	.3505	.2102	.0698	.9294	.7891	.6487	.5084	.3680	.2276	.0873	.9469	.8065	.6662
821	.3507	.2103	.0700	.9296	.7893	.6489	.5085	.3682	.2278	.0875	.9471	.8068	.6664
824	.3508	.2105	.0701	.9298	.7894	.6491	.5087	.3684	.2280	.0877	.9473	.8070	.6666
827	.3510	.2107	.0703	.9300	.7896	.6493	.5089	.3686	.2282	.0879	.9475	.8072	.6669
429830	22.3512	23.2108	24.0705	24.9301	25.7898	26.6495	27.5091	28.3688	29.2284	30.0881	30.9478	31.8074	32.6671
833	.3513	.2110	.0706	.9303	.7900	.6496	.5093	.3690	.2286	.0883	.9480	.8076	.6673
836	.3515	.2111	.0708	.9305	.7902	.6498	.5095	.3692	.2288	.0885	.9482	.8079	.6675
839	.3516	.2113	.0710	.9307	.7903	.6500	.5097	.3694	.2291	.0887	.9484	.8081	.6678
842	.3518	.2115	.0712	.9308	.7905	.6502	.5099	.3696	.2293	.0889	.9486	.8083	.6680
429845	22.3519	23.2116	24.0713	24.9310	25.7907	26.6504	27.5101	28.3698	29.2295	30.0892	30.9488	31.8085	32.6682
848	.3521	.2118	.0715	.9312	.7909	.6506	.5103	.3700	.2297	.0894	.9491	.8088	.6684
851	.3523	.2120	.0717	.9314	.7911	.6508	.5105	.3702	.2299	.0896	.9493	.8090	.6687
854	.3524	.2121	.0718	.9315	.7912	.6509	.5107	.3704	.2301	.0898	.9495	.8092	.6689
857	.3526	.2123	.0720	.9317	.7914	.6511	.5108	.3706	.2303	.0900	.9497	.8094	.6691
429860	22.3527	23.2124	24.0722	24.9319	25.7916	26.6513	27.5110	28.3708	29.2305	30.0902	30.9499	31.8096	32.6694
863	.3529	.2126	.0723	.9321	.7918	.6515	.5112	.3710	.2307	.0904	.9501	.8099	.6696
866	.3530	.2128	.0725	.9322	.7920	.6517	.5114	.3712	.2309	.0906	.9504	.8101	.6698
869	.3532	.2129	.0727	.9324	.7921	.6519	.5116	.3714	.2311	.0908	.9506	.8103	.6700
872	.3533	.2131	.0728	.9326	.7923	.6521	.5118	.3716	.2313	.0910	.9508	.8105	.6703
429875	22.3535	23.2133	24.0730	24.9328	25.7925	26.6523	27.5120	28.3718	29.2315	30.0913	30.9510	31.8108	32.6705
878	.3537	.2134	.0732	.9329	.7927	.6524	.5122	.3719	.2317	.0915	.9512	.8110	.6707
881	.3538	.2136	.0733	.9331	.7929	.6526	.5124	.3721	.2319	.0917	.9514	.8112	.6710
884	.3540	.2137	.0735	.9333	.7930	.6528	.5126	.3723	.2321	.0919	.9516	.8114	.6712
887	.3541	.2139	.0737	.9334	.7932	.6530	.5128	.3725	.2323	.0921	.9519	.8116	.6714
429890	22.3543	23.2141	24.0738	24.9336	25.7934	26.6532	27.5130	28.3727	29.2325	30.0923	30.9521	31.8119	32.6716
893	.3544	.2142	.0740	.9338	.7936	.6534	.5132	.3729	.2327	.0925	.9523	.8121	.6719
896	.3546	.2144	.0742	.9340	.7938	.6536	.5133	.3731	.2329	.0927	.9525	.8123	.6721
899	.3547	.2145	.0743	.9341	.7939	.6537	.5135	.3733	.2331	.0929	.9527	.8125	.6723
902	.3549	.2147	.0745	.9343	.7941	.6539	.5137	.3735	.2333	.0931	.9529	.8127	.6726
429905	22.3551	23.2149	24.0747	24.9345	25.7943	26.6541	27.5139	28.3737	29.2335	30.0934	30.9532	31.8130	32.6728
908	.3552	.2150	.0748	.9347	.7945	.6543	.5141	.3739	.2337	.0936	.9534	.8132	.6730
911	.3554	.2152	.0750	.9348	.7947	.6545	.5143	.3741	.2339	.0938	.9536	.8134	.6732
914	.3555	.2154	.0752	.9350	.7948	.6547	.5145	.3743	.2342	.0940	.9538	.8136	.6735
917	.3557	.2155	.0754	.9352	.7950	.6549	.5147	.3745	.2344	.0942	.9540	.8139	.6737
429920	22.3558	23.2157	24.0755	24.9354	25.7952	26.6550	27.5149	28.3747	29.2346	30.0944	30.9542	31.8141	32.6739
923	.3560	.2158	.0757	.9355	.7954	.6552	.5151	.3749	.2348	.0946	.9545	.8143	.6741
926	.3562	.2160	.0759	.9357	.7956	.6554	.5153	.3751	.2350	.0948	.9547	.8145	.6744
929	.3563	.2162	.0760	.9359	.7957	.6556	.5155	.3753	.2352	.0950	.9549	.8147	.6746
932	.3565	.2163	.0762	.9361	.7959	.6558	.5156	.3755	.2354	.0952	.9551	.8150	.6748
429935	22.3566	23.2165	24.0764	24.9362	25.7961	26.6560	27.5158	28.3757	29.2356	30.0955	30.9553	31.8152	32.6751
938	.3568	.2167	.0765	.9364	.7963	.6562	.5160	.3759	.2358	.0957	.9555	.8154	.6753
941	.3569	.2168	.0767	.9366	.7965	.6563	.5162	.3761	.2360	.0959	.9558	.8156	.6755
944	.3571	.2170	.0769	.9368	.7966	.6565	.5164	.3763	.2362	.0961	.9560	.8159	.6757
947	.3572	.2171	.0770	.9369	.7968	.6567	.5166	.3765	.2364	.0963	.9562	.8161	.6760
429950	22.3574	23.2173	24.0772	24.9371	25.7970	26.6569	27.5168	28.3767	29.2366	30.0965	30.9564	31.8163	32.6762
953	.3576	.2175	.0774	.9373	.7972	.6571	.5170	.3769	.2368	.0967	.9566	.8165	.6764
956	.3577	.2176	.0775	.9374	.7974	.6573	.5172	.3771	.2370	.0969	.9568	.8167	.6767
959	.3579	.2178	.0777	.9376	.7975	.6575	.5174	.3773	.2372	.0971	.9570	.8170	.6769
962	.3580	.2179	.0779	.9378	.7977	.6576	.5176	.3775	.2374	.0973	.9573	.8172	.6771
429965	22.3582	23.2181	24.0780	24.9380	25.7979	26.6578	27.5178	28.3777	29.2376	30.0976	30.9575	31.8174	32.6773
968	.3583	.2183	.0782	.9381	.7981	.6580	.5180	.3779	.2378	.0978	.9577	.8176	.6776
971	.3585	.2184	.0784	.9383	.7983	.6582	.5181	.3781	.2380	.0980	.9579	.8179	.6778
974	.3586	.2186	.0785	.9385	.7984	.6584	.5183	.3783	.2382	.0982	.9581	.8181	.6780
977	.3588	.2188	.0787	.9387	.7986	.6586	.5185	.3785	.2384	.0984	.9583	.8183	.6783
429980	22.3590	23.2189	24.0789	24.9388	25.7988	26.6588	27.5187	28.3787	29.2386	30.0986	30.9586	31.8185	32.6785
983	.3591	.2191	.0790	.9390	.7990	.6589	.5189	.3789	.2388	.0988	.9588	.8187	.6787
986	.3593	.2192	.0792	.9392	.7992	.6591	.5191	.3791	.2390	.9990	.9590	.8190	.6789
989	.3594	.2194	.0794	.9394	.7993	.6593	.5193	.3793	.2393	.0992	.9592	.8192	.6792
992	.3586	.2196	.0796	.9395	.7995	.6595	.5195	.3795	.2395	.0994	.9594	.8194	.6794
429995	22.3597	23.2197	24.0797	24.9397	25.7997	26.6597	27.5197	28.3797	29.2397	30.0997	30.9596	31.8196	32.6796
998	.3599	.2199	.0799	.9399	.7999	.6599	.5199	.3799	.2399	.0999	.9599	.8199	.6798
430001	.3601	.2201	.0801	.9401	.8001	.6601	.5201	.3801	.2401	.1001	.9601	.8201	.6801
004	.3602	.2202	.0802	.9402	.8002	.6602	.5203	.3803	.2403	.1003	.9603	.8203	.6803
007	.3604	.2204	.0804	.9404	.8004	.6604	.5204	.3805	.2405	.1005	.9605	.8205	.6805
430010	22.3605	23.2205	24.0806	24.9406	25.8006	26.6606	27.5206	28.3807	29.2407	30.1007	30.9607	31.8207	32.6808
013	.3607	.2207	.0807	.9408	.8008	.6608	.5208	.3809	.2409	.1009	.9609	.8210	.6810
016	.3608	.2209	.0809	.9409	.8010	.6610	.5210	.3811	.2411	.1011	.9612	.8212	.6812
019	.3610	.2210	.0811	.9411	.8011	.6612	.5212	.3813	.2413	.1013	.9614	.8214	.6814
022	.3611	.2212	.0812	.9413	.8013	.6614	.5214	.3815	.2415	.1015	.9616	.8216	.6817
430025	22.3613	23.2214	24.0814	24.9415	25.8015	26.6616	27.5216	28.3817	29.2417	30.1018	30.9618	31.8219	32.6819
028	.3615	.2215	.0816	.9416	.8017	.6617	.5218	.3818	.2419	.1020	.9620	.8221	.6821
031	.3616	.2217	.0817	.9418	.8019	.6619	.5220	.3820	.2421	.1022	.9622	.8223	.6824
034	.3618	.2218	.0819	.9420	.8020	.6621	.5222	.3822	.2423	.1024	.9624	.8225	.6826
037	.3619	.2220	.0821	.9421	.8022	.6623	.5224	.3824	.2425	.1026	.9627	.8227	.6828
430040	22.3621	23.2222	24.0822	24.9423	25.8024	26.6625	27.5226	28.3826	29.2427	30.1028	30.9629	31.8230	32.6830
043	.3622	.2223	.0824	.9425	.8026	.6627	.5228	.3828	.2429	.1030	.9631	.8232	.6833
046	.3624	.2225	.0826	.9427	.8028	.6629	.5229	.3830	.2431	.1032	.9633	.8234	.6835
049	.3625	.2226	.0827	.9428	.8029	.6630	.5231	.3832	.2433	.1034	.9635	.8236	.6837
052	.3627	.2228	.0829	.9430	.8031	.6632	.5233	.3834	.2435	.1036	.9637	.8238	.6840
430055	22.3629	23.2230	24.0831	24.9432	25.8033	26.6634	27.5235	28.3836	29.2437	30.1039	30.9640	31.8241	32.6842
058	.3630	.2231	.0832	.9434	.8035	.6636	.5237	.3838	.2439	.1041	.9642	.8243	.6844
061	.3632	.2233	.0834	.9435	.8037	.6638	.5239	.3840	.2441	.1043	.9644	.8245	.6846
064	.3633	.2235	.0836	.9437	.8038	.6640	.5241	.3842	.2444	.1045	.9646	.8247	.6849
067	.3635	.2236	.0838	.9439	.8040	.6642	.5243	.3844	.2446	.1047	.9648	.8250	.6851
430070	22.3636	23.2238	24.0839	24.9441	25.8042	26.6643	27.5245	28.3846	29.2448	30.1049	30.9650	31.8252	32.6853
073	.3638	.2239	.0841	.9442	.8044	.6645	.5247	.3848	.2450	.1051	.9653	.8254	.6855
076	.3640	.2241	.0843	.9444	.8046	.6647	.5249	.3850	.2452	.1053	.9655	.8256	.6858
079	.3641	.2243	.0844	.9446	.8047	.6649	.5251	.3852	.2454	.1055	.9657	.8258	.6860
082	.3643	.2244	.0846	.9448	.8049	.6651	.5252	.3854	.2456	.1057	.9659	.8261	.6862
430085	22.3644	23.2246	24.0848	24.9449	25.8051	26.6653	27.5254	28.3856	29.2458	30.1060	30.9661	31.8263	32.6865
088	.3646	.2248	.0849	.9451	.8053	.6655	.5256	.3858	.2460	.1062	.9663	.8265	.6867
091	.3647	.2249	.0851	.9453	.8055	.6656	.5258	.3860	.2462	.1064	.9666	.8267	.6869
094	.3649	.2251	.0853	.9455	.8056	.6658	.5260	.3862	.2464	.1066	.9668	.8270	.6871
097	.3650	.2252	.0854	.9456	.8058	.6660	.5262	.3864	.2466	.1068	.9670	.8272	.6874
430100	22.3652	23.2254	24.0856	24.9458	25.8060	26.6662	27.5264	28.3866	29.2468	30.1070	30.9672	31.8274	32.6876

MEGACYCLES PER SECOND

HARMONICS

BASIC FREQ.	78	80	82	84	86	88	90	92	94	96	100	104	108
429800	33.5244	34.3840	35.2436	36.1032	36.9628	37.8224	38.6820	39.5416	40.4012	41.2608	42.9800	44.6992	46.4184
803	.5246	.3842	.2438	.1035	.9631	.8227	.6823	.5419	.4015	.2611	.9803	.6995	.4187
806	.5249	.3845	.2441	.1037	.9633	.8229	.6825	.5422	.4018	.2614	.9806	.6998	.4190
809	.5251	.3847	.2443	.1040	.9636	.8232	.6828	.5424	.4020	.2617	.9809	.7001	.4194
812	.5253	.3850	.2446	.1042	.9638	.8235	.6831	.5427	.4023	.2620	.9812	.7004	.4197
429815	33.5256	34.3852	35.2448	36.1045	36.9641	37.8237	38.6834	39.5430	40.4026	41.2622	42.9815	44.7008	46.4200
818	.5258	.3854	.2451	.1047	.9643	.8240	.6836	.5433	.4029	.2625	.9818	.7011	.4203
821	.5260	.3857	.2453	.1050	.9646	.8242	.6839	.5435	.4032	.2628	.9821	.7014	.4207
824	.5263	.3859	.2456	.1052	.9649	.8245	.6842	.5438	.4035	.2631	.9824	.7017	.4210
827	.5265	.3862	.2458	.1055	.9651	.8248	.6844	.5441	.4037	.2634	.9827	.7020	.4213
429830	33.5267	34.3864	35.2461	36.1057	36.9654	37.8250	38.6847	39.5444	40.4040	41.2637	42.9830	44.7023	46.4216
833	.5270	.3866	.2463	.1060	.9656	.8253	.6850	.5446	.4043	.2640	.9833	.7026	.4220
836	.5272	.3869	.2466	.1062	.9659	.8256	.6852	.5449	.4046	.2643	.9836	.7029	.4223
839	.5374	.3871	.2468	.1065	.9662	.8258	.6855	.5452	.4049	.2645	.9839	.7033	.4226
842	.5277	.3874	.2470	.1067	.9664	.8261	.6858	.5455	.4051	.2648	.9842	.7036	.4229
429845	33.5279	34.3876	35.2473	36.1070	36.9667	37.8264	38.6861	39.5457	40.4054	41.2651	42.9845	44.7039	46.4233
848	.5281	.3878	.2475	.1072	.9669	.8266	.6863	.5460	.4057	.2654	.9848	.7042	.4236
851	.5284	.3881	.2478	.1075	.9672	.8269	.6866	.5463	.4060	.2657	.9851	.7045	.4239
854	.5286	.3883	.2480	.1077	.9674	.8272	.6869	.5466	.4063	.2660	.9854	.7048	.4242
857	.5288	.3886	.2483	.1080	.9677	.8274	.6871	.5468	.4066	.2663	.9857	.7051	.4246
429860	33.5291	34.3888	35.2485	36.1082	36.9680	37.8277	38.6874	39.5471	40.4068	41.2666	42.9860	44.7054	46.4249
863	.5293	.3890	.2488	.1085	.9682	.8279	.6877	.5474	.4071	.2668	.9863	.7058	.4252
866	.5295	.3893	.2490	.1087	.9685	.8282	.6879	.5477	.4074	.2671	.9866	.7061	.4255
869	.5298	.3895	.2493	.1090	.9687	.8285	.6882	.5479	.4077	.2674	.9869	.7064	.4259
872	.5300	.3898	.2495	.1092	.9690	.8287	.6885	.5482	.4080	.2677	.9872	.7067	.4262
429875	33.5303	34.3900	35.2498	36.1095	36.9693	37.8290	38.6888	39.5485	40.4083	41.2680	42.9875	44.7070	46.4265
878	.5305	.3902	.2500	.1098	.9695	.8293	.6890	.5488	.4085	.2683	.9878	.7073	.4268
881	.5307	.3905	.2502	.1100	.9698	.8295	.6893	.5491	.4088	.2686	.9881	.7076	.4271
884	.5310	.3907	.2505	.1103	.9700	.8298	.6896	.5493	.4091	.2689	.9884	.7079	.4275
887	.5312	.3910	.2507	.1105	.9703	.8301	.6898	.5496	.4094	.2692	.9887	.7082	.4278
429890	33.5314	34.3912	35.2510	36.1108	36.9705	37.8303	38.6901	39.5499	40.4097	41.2694	42.9890	44.7086	46.4281
893	.5317	.3914	.2512	.1110	.9708	.8306	.6904	.5502	.4099	.2697	.9893	.7089	.4284
896	.5319	.3917	.2515	.1113	.9711	.8308	.6906	.5504	.4102	.2700	.9896	.7092	.4288
899	.5321	.3919	.2517	.1115	.9713	.8311	.6909	.5507	.4105	.2703	.9899	.7095	.4291
902	.5324	.3922	.2520	.1118	.9716	.8314	.6912	.5510	.4108	.2706	.9902	.7098	.4294
429905	33.5326	34.3924	35.2522	36.1120	36.9718	37.8316	38.6915	39.5513	40.4111	41.2709	42.9905	44.7101	46.4297
908	.5328	.3926	.2525	.1123	.9721	.8319	.6917	.5515	.4114	.2712	.9908	.7104	.4301
911	.5331	.3929	.2527	.1125	.9723	.8322	.6920	.5518	.4116	.2715	.9911	.7107	.4304
914	.5333	.3931	.2529	.1128	9726	.8324	.6923	.5521	.4119	.2717	.9914	.7111	.4307
917	.5335	.3934	.2532	.1130	.9729	.8327	.6925	.5524	.4122	.2720	.9917	.7114	.4310
429920	33.5338	34.3936	35.2534	36.1133	36.9731	37.8330	38.6928	39.5526	40.4125	41.2723	42.9920	44.7117	46.4314
923	.5340	.3938	.2537	.1135	.9734	.8332	.6931	.5529	.4128	.2726	.9923	.7120	.4317
926	.5342	.3941	.2539	.1138	.9736	.8335	.6933	.5532	.4130	.2729	.9926	.7123	.4320
929	.5345	.3943	.2542	.1140	.9739	.8338	.6936	.5535	.4133	.2732	.9929	.7126	.4323
932	.5347	.3946	.2544	.1143	.9742	.8340	.6939	.5537	.4136	.2735	.9932	.7129	.4327
429935	33.5349	34.3948	35.2547	36.1145	36.9744	37.8343	38.6942	39.5540	40.4139	41.2738	42.9935	44.7132	46.4330
938	.5352	.3950	.2549	.1148	.9747	.8345	.6944	.5543	.4142	.2740	.9938	.7136	.4333
941	.5354	.3953	.2552	.1150	.9749	.8348	.6947	.5546	.4145	.2743	.9941	.7139	.4336
944	.5356	.3955	.2554	.1153	.9752	.8351	.6950	.5548	.4147	.2746	.9944	.7142	.4340
947	.5359	.3958	.2557	.1155	.9754	.8353	.6952	.5551	.4150	.2749	.9947	.7145	.4343
429950	33.5361	34.3960	35.2559	36.1158	36.9757	37.8356	38.6955	39.5554	40.4153	41.2752	42.9950	44.7148	46.4346
953	.5363	.3962	.2561	.1161	.9760	.8359	.6958	.5557	.4156	.2755	.9953	.7151	.4349
956	.5366	.3965	.2564	.1163	.9762	.8361	.6960	.5560	.4159	.2758	.9956	.7154	.4352
959	.5368	.3967	.2566	.1166	.9765	.8364	.6963	.5562	.4161	.2761	.9959	.7157	.4356
962	.5370	.3970	.2569	.1168	.9767	.8367	.6966	.5565	.4164	.2764	.9962	.7160	.4359
429965	33.5373	34.3972	35.2571	36.1171	36.9770	37.8369	38.6969	39.5568	40.4167	41.2766	42.9965	44.7164	46.4362
968	.5375	.3974	.2574	.1173	.9772	.8372	.6971	.5571	.4170	.2769	.9968	.7167	.4365
971	.5377	.3977	.2576	.1176	.9775	.8374	.6974	.5573	.4173	.2772	.9971	.7170	.4369
974	.5380	.3979	.2579	.1178	.9778	.8377	.6977	.5576	.4176	.2775	.9974	.7173	.4372
977	.5382	.3982	.2581	.1181	.9780	.8380	.6979	.5579	.4178	.2778	.9977	.7176	.4375
429980	33.5384	34.3984	35.2584	36.1183	36.9783	37.8382	38.6982	39.5582	40.4181	41.2781	42.9980	44.7179	46.4378
983	.5387	.3986	.2586	.1186	.9785	.8385	.6985	.5584	.4184	.2784	.9983	.7182	.4382
986	.5389	.3989	.2589	.1188	.9788	.8388	.6987	.5587	.4187	.2787	.9986	.7185	.4385
989	.5391	.3991	.2591	.1191	.9791	.8390	.6990	.5590	.4190	.2789	.9989	.7189	.4388
992	.5394	.3994	.2593	.1193	.9793	.8393	.6993	.5593	.4192	.2792	.9992	.7192	.4391
429995	33.5396	34.3996	35.2596	36.1196	36.9796	37.8396	38.6996	39.5595	40.4195	41.2795	42.9995	44.7195	46.4395
998	.5398	.3998	.2598	.1198	.9798	.8398	.6998	.5598	.4198	.2798	.9998	.7198	.4398
430001	.5401	.4001	.2601	.1201	.9801	.8401	.7001	.5601	.4201	.2801	43.0001	.7201	.4401
004	.5403	.4003	.2603	.1203	.9803	.8404	.7004	.5604	.4204	.2804	.0004	.7204	.4404
007	.5405	.4006	.2606	.1206	.9806	.8406	.7006	.5606	.4207	.2807	.0007	.7207	.4408
430010	33.5408	34.4008	35.2608	36.1208	36.9809	37.8409	38.7009	39.5609	40.4209	41.2810	43.0010	44.7210	46.4411
013	.5410	.4010	.2611	.1211	.9811	.8411	.7012	.5612	.4212	.2812	.0013	.7214	.4414
016	.5412	.4013	.2613	.1213	.9814	.8414	.7014	.5615	.4215	.2815	.0016	.7217	.4417
019	.5415	.4015	.2616	.1216	.9816	.8417	.7017	.5617	.4218	.2818	.0019	.7220	.4421
022	.5417	.4018	.2618	.1218	.9819	.8419	.7020	.5620	.4221	.2821	.0022	.7223	.4424
430025	33.5420	34.4020	35.2621	36.1221	36.9822	37.8422	38.7023	39.5623	40.4224	41.2824	43.0025	44.7226	46.4427
028	.5422	.4022	.2623	.1224	.9824	.8425	.7025	.5626	.4226	.2827	.0028	.7229	.4430
031	.5424	.4025	.2625	.1226	.9827	.8427	.7028	.5629	.4229	.2830	.0031	.7232	.4433
034	.5427	.4027	.2628	.1229	.9829	.8430	.7031	.5631	.4232	.2833	.0034	.7235	.4437
037	.5429	.4030	.2630	.1231	.9832	.8433	.7033	.5634	.4235	.2836	.0037	.7238	.4440
430040	33.5431	34.4032	35.2633	36.1234	36.9834	37.8435	38.7036	39.5637	40.4238	41.2838	43.0040	44.7242	46.4443
043	.5434	.4034	.2635	.1236	.9837	.8438	.7039	.5640	.4240	.2841	.0043	.7245	.4446
046	.5436	.4037	.2638	.1239	.9840	.8440	.7041	.5642	.4243	.2844	.0046	.7248	.4450
049	.5438	.4039	.2640	.1241	.9842	.8443	.7044	.5645	.4246	.2847	.0049	.7251	.4453
052	.5441	.4042	.2643	.1244	.9845	.8446	.7047	.5648	.4249	.2850	.0052	.7254	.4456
430055	33.5443	34.4044	35.2645	36.1246	36.9847	37.8448	38.7050	39.5651	40.4252	41.2853	43.0055	44.7257	46.4459
058	.5445	.4046	.2648	.1249	.9850	.8451	.7052	.5653	.4255	.2856	.0058	.7260	.4463
061	.5448	.4049	.2650	.1251	.9852	.8454	.7055	.5656	.4257	.2859	.0061	.7263	.4466
064	.5450	.4051	.2652	.1254	.9855	.8456	.7058	.5659	.4260	.2861	.0064	.7267	.4469
067	.5452	.4054	.2655	.1256	.9858	.8459	.7060	.5662	.4263	.2864	.0067	.7270	.4472
430070	33.5455	34.4056	35.2657	36.1259	36.9860	37.8462	38.7063	39.5664	40.4266	41.2867	43.0070	44.7273	46.4476
073	.5457	.4058	.2660	.1261	.9863	.8464	.7066	.5667	.4269	.2870	.0073	.7276	.4479
076	.5459	.4061	.2662	.1264	.9865	.8467	.7068	.5670	.4271	.2873	.0076	.7279	.4482
079	.5462	.4063	.2665	.1266	.9868	.8470	.7071	.5673	.4274	.2876	.0079	.7282	.4485
082	.5464	.4066	.2667	.1269	.9871	.8472	.7074	.5675	.4277	.2879	.0082	.7285	.4489
430085	33.5466	34.4068	35.2670	36.1271	36.9873	37.8475	38.7077	39.5678	40.4280	41.2882	43.0085	44.7288	46.4492
088	.5469	.4070	.2672	.1274	.9876	.8477	.7079	.5681	.4283	.2884	.0088	.7292	.4495
091	.5471	.4073	.2675	.1276	.9878	.8480	.7082	.5684	.4286	.2887	.0091	.7295	.4498
094	.5473	.4075	.2677	.1279	.9881	.8483	.7085	.5686	.4288	.2890	.0094	.7298	.4502
097	.5476	.4078	.2680	.1281	.9883	.8485	.7087	.5689	.4291	.2893	.0097	.7301	.4505
430100	33.5478	34.4080	35.2682	36.1284	36.9886	37.8488	38.7090	39.5692	40.4294	41.1896	43.0100	44.7304	46.4508

MEGACYCLES PER SECOND

H A R M O N I C S

BASIC FREQ.	52	54	56	58	60	62	64	66	68	70	72	74	76
430100	22.3652	23.2254	24.0856	24.9458	25.8060	26.6662	27.5264	28.3866	29.2468	30.1070	30.9672	31.8274	32.6876
103	.3654	.2256	.0858	.9460	.8062	.6664	.5266	.3868	.2470	.1072	.9674	.8276	.6878
106	.3655	.2257	.0859	.9461	.8064	.6666	.5268	.3870	.2472	.1074	.9676	.8278	.6881
109	.3657	.2259	.0861	.9463	.8065	.6668	.5270	.3872	.2474	.1076	.9678	.8281	.6883
112	.3658	.2260	.0863	.9465	.8067	.6669	.5272	.3874	.2476	.1078	.9681	.8283	.6885
430115	22.3660	23.2262	24.0864	24.9467	25.8069	26.6671	27.5274	28.3876	29.2478	30.1081	30.9683	31.8285	32.6887
118	.3661	.2264	.0866	.9468	.8071	.6673	.5276	.3878	.2480	.1083	.9685	.8287	.6890
121	.3663	.2265	.0868	.9470	.8073	.6675	.5277	.3880	.2482	.1085	.9687	.8290	.6892
124	.3664	.2267	.0869	.9472	.8074	.6677	.5279	.3882	.2484	.1087	.9689	.8292	.6894
127	.3666	.2269	.0871	.9474	.8076	.6679	.5281	.3884	.2486	.1089	.9691	.8294	.6897
430130	22.3668	23.2270	24.0873	25.9475	26.8078	26.6681	27.5283	28.3886	29.2488	30.1091	30.9694	31.8296	32.6899
133	.3669	.2272	.0874	.9477	.8080	.6682	.5285	.3888	.2490	.1093	.9696	.8298	.6901
136	.3671	.2273	.0876	.9479	.8082	.6684	.5287	.3890	.2492	.1095	.9698	.8301	.6903
139	.3672	.2275	.0878	.9481	.8083	.6686	.5289	.3892	.2495	.1097	.9700	.8303	.6906
142	.3674	.2277	.0880	.9482	.8085	.6688	.5291	.3894	.2497	.1099	.9702	.8305	.6908
430145	22.3675	23.2278	24.0881	24.9484	25.8087	26.6690	27.5293	28.3896	29.2499	30.1102	30.9704	31.8307	32.6910
148	.3677	.2280	.0883	.9486	.8089	.6692	.5295	.3898	.2501	.1104	.9707	.8310	.6912
151	.3679	.2282	.0885	.9488	.8091	.6694	.5297	.3900	.2503	.1106	.9709	.8312	.6915
154	.3680	.2283	.0886	.9489	.8092	.6695	.5299	.3902	.2505	.1108	.9711	.8314	.6917
157	.3682	.2285	.0888	.9491	.8094	.6697	.5300	.3904	.2507	.1110	.9713	.8316	.6919
430160	22.3683	23.2286	24.0890	24.9493	25.8096	26.6699	27.5302	28.3906	29.2509	30.1112	30.9715	31.8318	32.6922
163	.3685	.2288	.0891	.9495	.8098	.6701	.5304	.3908	.2511	.1114	.9717	.8321	.6924
166	.3686	.2290	.0893	.9496	.8100	.6703	.5306	.3910	.2513	.1116	.9720	.8323	.6926
169	.3688	.2291	.0895	.9498	.8101	.6705	.5308	.3912	.2515	.1118	.9722	.8325	.6928
172	.3689	.2293	.0896	.9500	.8103	.6707	.5310	.3914	.2517	.1120	.9724	.8327	.6931
430175	22.3691	23.2295	24.0898	24.9502	25.8105	26.6709	27.5312	28.3916	29.2519	30.1123	30.9726	31.8330	32.6933
178	.3693	.2296	.0900	.9503	.8107	.6710	.5314	.3917	.2521	.1125	.9728	.8332	.6935
181	.3694	.2298	.0901	.9505	.8109	.6712	.5316	.3919	.2523	.1127	.9730	.8334	.6938
184	.3696	.2299	.0903	.9507	.8110	.6714	.5318	.3921	.2525	.1129	.9732	.8336	.6940
187	.3697	.2301	.0905	.9508	.8112	.6716	.5320	.3923	.2527	.1131	.9735	.8338	.6942
430190	22.3699	23.2303	24.0906	24.9510	25.8114	26.6718	27.5322	28.3925	29.2529	30.1133	30.9737	31.8341	32.6944
193	.3700	.2304	.0908	.9512	.8116	.6720	.5324	.3927	.2531	.1135	.9739	.8343	.6947
196	.3702	.2306	.0910	.9514	.8118	.6722	.5325	.3929	.2533	.1137	.9741	.8345	.6949
199	.3703	.2307	.0911	.9515	.8119	.6723	.5327	.3931	.2535	.1139	.9743	.8347	.6951
202	.3705	.2309	.0913	.9517	.8121	.6725	.5329	.3933	.2537	.1141	.9745	.8349	.6954
430205	22.3707	23.2311	24.0915	24.9519	25.8123	26.6727	27.5331	28.3935	29.2539	30.1144	30.9748	31.8352	32.6956
208	.3708	.2312	.0916	.9521	.8125	.6729	.5333	.3937	.2541	.1146	.9750	.8354	.6958
211	.3710	.2314	.0918	.9522	.8127	.6731	.5335	.3939	.2543	.1148	.9752	.8356	.6960
214	.3711	.2316	.0920	.9524	.8128	.6733	.5337	.3941	.2546	.1150	.9754	.8358	.6963
217	.3713	.2317	.0922	.9526	.8130	.6735	.5339	.3943	.2548	.1152	.9756	.8361	.6965
430220	22.3714	23.2319	24.0923	24.9528	25.8132	26.6736	27.5341	28.3945	29.2550	30.1154	30.9758	31.8363	32.6967
223	.3716	.2320	.0925	.9529	.8134	.6738	.5343	.3947	.2552	.1156	.9761	.8365	.6969
226	.3718	.2322	.0927	.9531	.8136	.6740	.5345	.3949	.2554	.1158	.9763	.8367	.6972
229	.3719	.2324	.0928	.9533	.8137	.6742	.5347	.3951	.2556	.1160	.9765	.8369	.6974
232	.3721	.2325	.0930	.9535	.8139	.6744	.5348	.3953	.2558	.1162	.9767	.8372	.6976
430235	22.3722	23.2327	24.0932	24.9536	25.8141	26.6746	27.5350	28.3955	29.2560	30.1165	30.9769	31.8374	32.6979
238	.3724	.2329	.0933	.9538	.8143	.6748	.5352	.3957	.2562	.1167	.9771	.8376	.6981
241	.3725	.2330	.0935	.9540	.8145	.6749	.5354	.3959	.2564	.1169	.9774	.8378	.6983
244	.3727	.2332	.0937	.9542	.8146	.6751	.5356	.3961	.2566	.1171	.9776	.8381	.6985
247	.3728	.2333	.0938	.9543	.8148	.6753	.5358	.3963	.2568	.1173	.9778	.8383	.6988
430250	22.3730	23.2335	24.0940	24.9545	25.8150	26.6755	27.5360	28.3965	29.2570	30.1175	30.9780	31.8385	32.6990
253	.3732	.2337	.0942	.9547	.8152	.6757	.5362	.3967	.2572	.1177	.9782	.8387	.6992
256	.3733	.2338	.0943	.9548	.8154	.6759	.5364	.3969	.2574	.1179	.9784	.8389	.6995
259	.3735	.2340	.0945	.9550	.8155	.6761	.5366	.3971	.2576	.1181	.9786	.8392	.6997
262	.3736	.2341	.0947	.9552	.8157	.6762	.5368	.3973	.2578	.1183	.9789	.8394	.6999
430265	22.3738	23.2343	24.0948	24.9554	25.8159	26.6764	27.5370	28.3975	29.2580	30.1186	30.9791	31.8396	32.7001
268	.3739	.2345	.0950	.9555	.8161	.6766	.5372	.3977	.2582	.1188	.9793	.8398	.7004
271	.3741	.2346	.0952	.9557	.8163	.6768	.5373	.3979	.2584	.1190	.9795	.8401	.7006
274	.3742	.2348	.0953	.9559	.8164	.6770	.5375	.3981	.2586	.1192	.9797	.8403	.7008
277	.3744	.2350	.0955	.9561	.8166	.6772	.5377	.3983	.2588	.1194	.9799	.8405	.7011
430280	22.3746	23.2351	24.0957	24.9562	25.8168	26.6774	27.5379	28.3985	29.2590	30.1196	30.9802	31.8407	32.7013
283	.3747	.2353	.0958	.9564	.8170	.6775	.5381	.3987	.2592	.1198	.9804	.8409	.7015
286	.3749	.2354	.0960	.9566	.8172	.6777	.5383	.3989	.2594	.1200	.9806	.8412	.7017
289	.3750	.2356	.0962	.9568	.8173	.6779	.5385	.3991	.2597	.1202	.9808	.8414	.7020
292	.3752	.2358	.0964	.9569	.8175	.6781	.5387	.3993	.2599	.1204	.9810	.8416	.7022
430295	22.3753	23.2359	24.0965	24.9571	25.8177	26.6783	27.5389	28.3995	29.2601	30.1207	30.9812	31.8418	32.7024
298	.3755	.2361	.0967	.9573	.8179	.6785	.5391	.3997	.2603	.1209	.9815	.8421	.7026
301	.3757	.2363	.0969	.9575	.8181	.6787	.5393	.3999	.2605	.1211	.9817	.8423	.7029
304	.3758	.2364	.0970	.9576	.8182	.6788	.5395	.4001	.2607	.1213	.9819	.8425	.7031
307	.3760	.2366	.0972	.9578	.8184	.6790	.5396	.4003	.2609	.1215	.9821	.8427	.7033
430310	22.3761	23.2367	24.0974	24.9580	25.8186	26.6792	27.5398	28.4005	29.2611	30.1217	30.9823	31.8429	32.7036
313	.3763	.2369	.0975	.9582	.8188	.6794	.5400	.4007	.2613	.1219	.9825	.8432	.7038
316	.3764	.2371	.0977	.9583	.8190	.6796	.5402	.4009	.2615	.1221	.9828	.8434	.7040
319	.3766	.2372	.0979	.9585	.8191	.6798	.5404	.4011	.2617	.1223	.9830	.8436	.7042
322	.3767	.2374	.0980	.9587	.8193	.6800	.5406	.4013	.2619	.1225	.9832	.8438	.7045
430325	22.3769	23.2376	24.0982	24.9589	25.8195	26.6802	27.5408	28.4015	29.2621	30.1228	30.9834	31.8441	32.7047
328	.3771	.2377	.0984	.9590	.8197	.6803	.5410	.4016	.2623	.1230	.9836	.8443	.7049
331	.3772	.2379	.0985	.9592	.8199	.6805	.5412	.4018	.2625	.1232	.9838	.8445	.7052
334	.3774	.2380	.0987	.9594	.8200	.6807	.5414	.4020	.2627	.1234	.9840	.8447	.7054
337	.3775	.2382	.0989	.9595	.8202	.6809	.5416	.4022	.2629	.1236	.9843	.8449	.7056
430340	22.3777	23.2384	24.0990	24.9597	25.8204	26.6811	27.5418	28.4024	29.2631	30.1238	30.9845	31.8452	32.7058
343	.3778	.2385	.0992	.9599	.8206	.6813	.5420	.4026	.2633	.1240	.9847	.8454	.7061
346	.3780	.2387	.0994	.9601	.8208	.6815	.5421	.4028	.2635	.1242	.9849	.8456	.7063
349	.3781	.2388	.0995	.9602	.8209	.6816	.5423	.4030	.2637	.1244	.9851	.8458	.7065
352	.3783	.2390	.0997	.9604	.8211	.6818	.5425	.4032	.2639	.1246	.9853	.8460	.7068
430355	22.3785	23.2392	24.0999	24.9606	25.8213	26.6820	27.5427	28.4034	29.2641	30.1249	30.9856	31.8463	32.7070
358	.3786	.2393	.1000	.9608	.8215	.6822	.5429	.4036	.2643	.1251	.9858	.8465	.7072
361	.3788	.2395	.1002	.9609	.8217	.6824	.5431	.4038	.2645	.1253	.9860	.8467	.7074
364	.3789	.2397	.1004	.9611	.8218	.6826	.5433	.4040	.2648	.1255	.9862	.8469	.7077
367	.3791	.2398	.1006	.9613	.8220	.6828	.5435	.4042	.2650	.1257	.9864	.8472	.7079
430370	22.3792	23.2400	24.1007	24.9615	25.8222	26.6829	27.5437	28.4044	29.2652	30.1259	30.9866	31.8474	32.7081
373	.3794	.2401	.1009	.9616	.8224	.6831	.5439	.4046	.2654	.1261	.9869	.8476	.7083
376	.3796	.2403	.1011	.9618	.8226	.6833	.5441	.4048	.2656	.1263	.9871	.8478	.7086
379	.3797	.2405	.1012	.9620	.8227	.6835	.5443	.4050	.2658	.1265	.9873	.8480	.7088
382	.3799	.2406	.1014	.9622	.8229	.6837	.5444	.4052	.2660	.1267	.9875	.8483	.7090
430385	22.3800	23.2408	24.1016	24.9623	25.8231	26.6839	27.5446	28.4054	29.2662	30.1270	30.9877	31.8485	32.7093
388	.3802	.2410	.1017	.9625	.8233	.6841	.5448	.4056	.2664	.1272	.9879	.8487	.7095
391	.3803	.2411	.1019	.9627	.8235	.6842	.5450	.4058	.2666	.1274	.9882	.8489	.7097
394	.3805	.2413	.1021	.9629	.8236	.6844	.5452	.4060	.2668	.1276	.9884	.8492	.7099
397	.3806	.2414	.1022	.9630	.8238	.6846	.5454	.4062	.2670	.1278	.9886	.8494	.7102
430400	22.3808	23.2416	24.1024	24.9632	25.8240	26.6848	27.5456	28.4064	29.2672	30.1280	30.9888	31.8496	32.7104

MEGACYCLES PER SECOND

H A R M O N I C S

BASIC FREQ.	78	80	82	84	86	88	90	92	94	96	100	104	108
430100	33.5478	34.4080	35.2682	36.1284	36.9886	37.8488	38.7090	39.5692	40.4294	41.2896	43.0100	44.7304	46.4508
103	.5480	.4082	.2684	.1287	.9889	.8491	.7093	.5695	.4297	.2899	.0103	.7307	.4511
106	.5483	.4085	.2687	.1289	.9891	.8493	.7095	.5698	.4300	.2902	.0106	.7310	.4514
109	.5485	.4087	.2689	.1292	.9894	.8496	.7098	.5700	.4302	.2905	.0109	.7313	.4518
112	.5487	.4090	.2692	.1294	.9896	.8499	.7101	.5703	.4305	.2908	.0112	.7316	.4521
430115	33.5490	34.4092	35.2694	36.1297	36.9899	37.8501	38.7104	39.5706	40.4308	41.2910	43.0115	44.7320	46.4524
118	.5492	.4094	.2697	.1299	.9901	.8504	.7106	.5709	.4311	.2913	.0118	.7323	.4527
121	.5494	.4097	.2699	.1302	.9904	.8506	.7109	.5711	.4314	.2916	.0121	.7326	.4531
124	.5497	.4099	.2702	.1304	.9907	.8509	.7112	.5714	.4317	.2919	.0124	.7329	.4534
127	.5499	.4102	.2704	.1307	.9909	.8512	.7114	.5717	.4319	.2922	.0127	.7332	.4537
430130	33.5501	34.4104	35.2707	36.1309	36.9912	37.8514	38.7117	39.5720	40.4322	41.2925	43.0130	44.7335	46.4540
133	.5504	.4106	.2709	.1312	.9914	.8517	.7120	.5722	.4325	.2928	.0133	.7338	.4544
136	.5506	.4109	.2712	.1314	.9917	.8520	.7122	.5725	.4328	.2931	.0136	.7341	.4547
139	.5508	.4111	.2714	.1317	.9920	.8522	.7125	.5728	.4331	.2933	.0139	.7345	.4550
142	.5511	.4114	.2716	.1319	.9922	.8525	.7128	.5731	.4333	.2936	.0142	.7348	.4553
430145	33.5513	34.4116	35.2719	36.1322	36.9925	37.8528	38.7131	39.5733	40.4336	41.2939	43.0145	44.7351	46.4557
148	.5515	.4118	.2721	.1324	.9927	.8530	.7133	.5736	.4339	.2942	.0148	.7354	.4560
151	.5518	.4121	.2724	.1327	.9930	.8533	.7136	.5739	.4342	.2945	.0151	.7357	.4563
154	.5520	.4123	.2726	.1329	.9932	.8536	.7139	.5742	.4345	.2948	.0154	.7360	.4566
157	.5522	.4126	.2729	.1332	.9935	.8538	.7141	.5744	.4348	.2951	.0157	.7363	.4570
430160	33.5525	34.4128	35.2731	36.1334	36.9938	37.8541	38.7144	39.5747	40.4350	41.2954	43.0160	44.7366	46.4573
163	.5527	.4130	.2734	.1337	.9940	.8543	.7147	.5750	.4353	.2956	.0163	.7370	.4576
166	.5529	.4133	.2736	.1339	.9943	.8546	.7149	.5753	.4356	.2959	.0166	.7373	.4579
169	.5532	.4135	.2739	.1342	.9945	.8549	.7152	.5755	.4359	.2962	.0169	.7376	.4583
172	.5534	.4138	.2741	.1344	.9948	.8551	.7155	.5758	.4362	.2965	.0172	.7379	.4586
430175	33.5537	34.4140	35.2744	36.1347	36.9951	37.8554	38.7158	39.5761	40.4365	41.2968	43.0175	44.7382	46.4589
178	.5539	.4142	.2746	.1350	.9953	.8557	.7160	.5764	.4367	.2971	.0178	.7385	.4592
181	.5541	.4145	.2748	.1352	.9956	.8559	.7163	.5767	.4370	.2974	.0181	.7388	.4595
184	.5544	.4147	.2751	.1355	.9958	.8562	.7166	.5769	.4373	.2977	.0184	.7391	.4599
187	.5546	.4150	.2753	.1357	.9961	.8565	.7168	.5772	.4376	.2980	.0187	.7394	.4602
430190	33.5548	34.4152	35.2756	36.1360	36.9963	37.8567	38.7171	39.5775	40.4379	41.2982	43.0190	44.7398	46.4605
193	.5551	.4154	.2758	.1362	.9966	.8570	.7174	.5778	.4381	.2985	.0193	.7401	.4608
196	.5553	.4157	.2761	.1365	.9969	.8572	.7176	.5780	.4384	.2988	.0196	.7404	.4612
199	.5555	.4159	.2763	.1367	.9971	.8575	.7 79	.5783	.4387	.2991	.0199	.7407	.4615
202	.5558	.4162	.2766	.1370	.9974	.8578	.7182	.5786	.4390	.2994	.0202	.7410	.4618
430205	33.5560	34.4164	35.2768	36.1372	36.9976	37.8580	38.7185	39.5789	40.4393	41.2997	43.0205	44.7413	46.4621
208	.5562	.4166	.2771	.1375	.9979	8583	.7187	.5791	.4396	.3000	.0208	.7416	.4625
211	.5565	.4169	.2773	.1377	.9981	.8586	.7190	.5794	.4398	.3003	.0211	.7419	.4628
214	.5567	.4171	.2775	.1380	.9984	.8588	.7193	.5797	.4401	.3005	.0214	.7423	.4631
217	.5569	.4174	.2778	.1382	.9987	.8591	.7195	.5800	.4404	.3008	.0217	.7426	.4634
430220	33.5572	34 4176	35.2780	36.1385	36.9989	37.8594	38.7198	39.5802	40.4407	41.3011	43.0220	44.7429	46.4638
223	.5574	.4178	.2783	.1387	.9992	.8596	.7201	.5805	.4410	.3014	.0223	.7432	.4641
226	.5576	.4181	.2785	.1390	.9994	.8599	.7203	.5808	.4412	.3017	.0226	.7435	.4644
229	.5579	.4183	.2788	.1392	.9997	.8602	.7206	.5811	.4415	.3020	.0229	.7438	.4647
232	.5581	.4186	.2790	.1395	37.0000	.8604	.7209	.5813	.4418	.3023	.0232	.7441	.4651
430235	33.5583	34.4188	35.2793	36.1397	37.0002	37.8607	38.7212	39.5816	40.4421	41.3026	43.0235	44.7444	46.4654
238	.5586	.4190	.2795	.1400	.0005	.8609	.7214	.5819	.4424	.3028	.0238	.7448	.4657
241	.5588	.4193	.2798	.1402	.0007	.8612	.7217	.5822	.4427	.3031	.0241	.7451	.4660
244	.5590	.4195	.2800	.1405	.0010	.8615	.7220	.5824	.4429	.3034	.0244	.7454	.4664
247	.5593	.4198	.2803	.1407	.0012	.8617	.7222	.5827	.4432	.3037	.0247	.7457	.4667
430250	33.5595	34.4200	35.2805	36.1410	37.0015	37.8620	38.7225	39.5830	40.4435	4 .3040	43.0250	44.7460	46.4670
253	.5597	.4202	.2807	.1413	.0018	.8623	.7228	.5833	.4438	.3043	.0253	.7463	.4673
256	.5600	.4205	.2810	.1415	.0020	.8625	.7230	.5836	.4441	.3046	.0256	.7466	.4676
259	.5602	.4207	.2812	.1418	.0023	.8628	.7233	.5838	.4443	.3049	.0259	.7469	.4680
262	.5604	.4210	.2815	.1420	.0025	.8631	.7236	.5841	.4446	.3052	.0262	.7472	.4683
430265	33.5607	34.4212	35.2817	36.1423	37.0028	37.8633	38.7239	39.5844	40.4449	41.3054	43.0265	44.7476	46.4686
268	.5609	.4214	.2820	.1425	.0030	.8636	.7241	.5847	.4452	.3057	.0268	.7479	.4689
271	.5611	.4217	.2822	.1428	.0033	.8638	.7244	.5849	.4455	.3060	.0271	.7482	.4693
274	.5614	.4219	.2825	.1430	.0036	.8641	.7247	.5852	.4458	.3063	.0274	.7485	.4696
277	.5616	.4222	.2827	.1433	.0038	.8644	.7249	.5855	.4460	.3066	.0277	.7488	.4699
430280	33.5618	34.4224	35.2830	36. 435	37.0041	37.8646	38.7252	39.5858	40.4463	41.3069	43.0280	44.7491	46.4702
283	.5621	.4226	.2832	.1438	.0043	.8649	.7255	.5860	.4466	.3072	.0283	.7494	.4706
286	.5623	.4229	.2835	.1440	.0046	.8652	.7257	.5863	.4469	.3075	.0286	.7497	.4709
289	.5625	.4231	.2837	.1443	.0049	.8654	.7260	.5866	.4472	.3077	.0289	.7501	.4712
292	.5628	.4234	.2839	.1445	.0051	.8657	.7263	.5869	.4474	.3080	.0292	.7504	.4715
430295	33.5630	34.4236	35.2842	36.1448	37.0054	37.8660	38.7266	39.5871	40.4477	41.3083	43.0295	44.7507	46.4719
298	.5632	.4238	.2844	.1450	.0056	.8662	.7268	.5874	.4480	.3086	.0298	.7510	.4722
301	.5635	.4241	.2847	.1453	.0059	.8665	.7271	.5877	.4483	.3089	.0301	.7513	.4725
304	.5637	.4243	.2849	.1455	.0061	.8668	.7274	.5880	.4486	.3092	.0304	.7516	.4728
307	.5639	.4246	.2852	.1458	.0064	.8670	.7276	.5882	.4489	.3095	.0307	.7519	.4732
430310	33.5642	34.4248	35.2854	36.1460	37.0067	37.8673	38.7279	39.5885	40.4491	41.3098	43.0310	44.7522	46.4735
313	.5644	.4250	.2857	.1463	.0069	.8675	.7282	.5888	.4494	.3100	.0313	.7526	.4738
316	.5646	.4253	.2859	.1465	.0072	.8678	.7284	.5891	.4497	.3103	.0316	.7529	.4741
319	.5649	.4255	.2862	.1468	.0074	.8681	.7287	.5893	.4500	.3106	.0319	.7532	.4745
322	.5651	.4258	.2864	.1470	.0077	.8683	.7290	.5896	.4503	.3109	.0322	.7535	.4748
430325	33.5654	34.4260	35.2867	36.1473	37.0080	37.8686	38.7293	39.5899	40.4506	41.3112	43.0325	44.7538	46.4751
328	.5656	.4262	.2869	.1476	.0082	.8689	.7295	.5902	.4508	.3115	.0328	.7541	.4754
331	.5658	.4265	.2871	.1478	.0085	.8691	.7298	.5905	.4511	.3118	.0331	.7544	.4757
334	.5661	.4267	.2874	.1481	.0087	.8694	.7301	.5907	.4514	.3121	.0334	.7547	.4761
337	.5663	.4270	.2876	.1483	.0090	.8697	.7303	.5910	.4517	.3124	.0337	.7550	.4764
430340	33.5665	34.4272	35.2879	36.1486	37.0092	37.8699	38.7306	39.5913	40.4520	41.3126	43.0340	44.7554	46.4767
343	.5668	.4274	.2881	.1488	.0095	.8702	.7309	.5916	.4522	.3129	.0343	.7557	.4770
346	.5670	.4277	.2884	.1491	.0098	.8704	.7311	.5918	.4525	.3132	.0346	.7560	.4774
349	.5672	.4279	.2886	.1493	.0100	.8707	.7314	.5921	.4528	.3135	.0349	.7563	.4777
352	.5675	.4282	.2889	.1496	.0103	.8710	.7317	.5924	.4531	.3138	.0352	.7566	.4780
430355	33.5677	34.4284	35.2891	36.1498	37.0105	37.8712	38.7320	39.5927	40.4534	41.3141	43.0355	44.7569	46.4783
358	.5679	.4286	.2894	.1501	.0108	.8715	.7322	.5929	.4537	.3144	.0358	.7572	.4787
361	.5682	.4289	.2896	.1503	.0110	.8718	.7325	.5932	.4539	.3147	.0361	.7575	.4790
364	.5684	.4291	.2898	.1506	.0113	.8720	.7328	.5935	.4542	.3149	.0364	.7579	.4793
367	.5686	.4294	.2901	.1508	.0116	.8723	.7330	.5938	.4545	.3152	.0367	.7582	.4796
430370	33.5689	34.4296	35.2903	36.1511	37.0118	37.8726	38.7333	39.5940	40.4548	41.3155	43.0370	44.7585	46.4800
373	.5691	.4298	.2906	.1513	.0121	.8728	.7336	.5943	.4551	.3158	.0373	.7588	.4803
376	.5693	.4301	.2908	.1516	.0123	.8731	.7338	.5946	.4553	.3161	.0376	.7591	.4806
379	.5696	.4303	.2911	.1518	.0126	.8734	.7341	.5949	.4556	.3164	.0379	.7594	.4809
382	.5698	.4306	.2913	.1521	.0129	.8736	.7344	.5951	.4559	.3167	.0382	.7597	.4813
430385	33.5700	34.4308	35.2916	36.1523	37.0131	37.8739	38.7347	39.5954	40.4562	41.3170	43.0385	44.7600	46.4816
388	.5703	.4310	.2918	.1526	.0134	.8741	.7349	.5957	.4565	.3172	.0388	.7604	.4819
391	.5705	.4313	.2921	.1528	.0136	.8744	.7352	.5960	.4568	.3175	.0391	.7607	.4822
394	.5707	.4315	.2923	.1531	.0139	.8747	.7355	.5962	.4570	.3178	.0394	.7610	.4826
397	.5710	.4318	.2926	.1533	.0141	.8749	.7357	.5965	.4573	.3181	.0397	.7613	.4829
430400	33.5712	34.4320	35.2928	36.1536	37.0144	37.8752	38.7360	39.5968	40.4576	41.3184	43.0400	44.7616	46.4832

MEGACYCLES PER SECOND

H A R M O N I C S

BASIC FREQ.	52	54	56	58	60	62	64	66	68	70	72	74	76
430400	22.3808	23.2416	24.1024	24.9632	25.8240	26.6848	27.5456	28.4064	29.2672	30.1280	30.9888	31.8496	32.7104
403	.3810	.2418	.1026	.9634	.8242	.6850	.5458	.4066	.2674	.1282	.9890	.8498	.7106
406	.3811	.2419	.1027	.9635	.8244	.6852	.5460	.4068	.2676	.1284	.9892	.8500	.7109
409	.3813	.2421	.1029	.9637	.8245	.6854	.5462	.4070	.2678	.1286	.9894	.8503	.7111
412	.3814	.2422	.1031	.9639	.8247	.6855	.5464	.4072	.2680	.1288	.9897	.8505	.7113
430415	22.3816	23.2424	24.1032	24.9641	25.8249	26.6857	27.5466	28.4074	29.2682	30.1291	30.9899	31.8507	32.7115
418	.3817	.2426	.1034	.9642	.8251	.6859	.5468	.4076	.2684	.1293	.9901	.8509	.7118
421	.3819	.2427	.1036	.9644	.8253	.6861	.5469	.4078	.2686	.1295	.9903	.8512	.7120
424	.3820	.2429	.1037	.9646	.8254	.6863	.5471	.4080	.2688	.1297	.9905	.8514	.7122
427	.3822	.2431	.1039	.9648	.8256	.6865	.5473	.4082	.2690	.1299	.9907	.8516	.7125
430430	22.3824	23.2432	24.1041	24.9649	25.8258	26.6867	27.5475	28.4084	29.2692	30.1301	30.9910	31.8518	32.7127
433	.3825	.2434	.1042	.9651	.8260	.6868	.5477	.4086	.2694	.1303	.9912	.8520	.7129
436	.3827	.2435	.1044	.9653	.8262	.6870	.5479	.4088	.2696	.1305	.9914	.8523	.7131
439	.3828	.2437	.1046	.9655	.8263	.6872	.5481	.4090	.2699	.1307	.9916	.8525	.7134
442	.3830	.2439	.1048	.9656	.8265	.6874	.5483	.4092	.2701	.1309	.9918	.8527	.7136
430445	22.3831	23.2440	24.1049	24.9658	25.8267	26.6876	27.5485	28.4094	29.2703	30.1312	30.9920	31.8529	32.7138
448	.3833	.2442	.1051	.9660	.8269	.6878	.5487	.4096	.2705	.1314	.9923	.8532	.7140
451	.3835	.2444	.1053	.9662	.8271	.6880	.5489	.4098	.2707	.1316	.9925	.8534	.7143
454	.3836	.2445	.1054	.9663	.8272	.6881	.5491	.4100	.2709	.1318	.9927	.8536	.7145
457	.3838	.2447	.1056	.9665	.8274	.6883	.5492	.4102	.2711	.1320	.9929	.8538	.7147
430460	22.3839	23.2448	24.1058	24.9667	25.8276	26.6885	27.5494	28.4104	29.2713	30.1322	30.9931	31.8540	32.7150
463	.3841	.2450	.1059	.9669	.8278	.6887	.5496	.4106	.2715	.1324	.9933	.8543	.7152
466	.3842	.2452	.1061	.9670	.8280	.6889	.5498	.4108	.2717	.1326	.9936	.8545	.7154
469	.3844	.2453	.1063	.9672	.8281	.6891	.5500	.4110	.2719	.1328	.9938	.8547	.7156
472	.3845	.2455	.1064	.9674	.8283	.6893	.5502	.4112	.2721	.1330	.9940	.8549	.7159
430475	22.3847	23.2457	24.1066	24.9676	25.8385	26.6895	27.5504	28.4114	29.2723	30.1333	30.9942	31.8552	32.7161
478	.3849	.2458	.1068	.9677	.8287	.6896	.5506	.4115	.2725	.1335	.9944	.8554	.7163
481	.3850	.2460	.1069	.9679	.8289	.6898	.5508	.4117	.2727	.1337	.9946	.8556	.7166
484	.3852	.2461	.1071	.9681	.8290	.6900	.5510	.4119	.2729	.1339	.9948	.8558	.7168
487	.3853	.2463	.1073	.9682	.8292	.6902	.5512	.4121	.2731	.1341	.9951	.8560	.7170
430490	22.3855	23.2465	24.1074	24.9684	25.8294	26.6904	27.5514	28.4123	29.2733	30.1343	30.9953	31.8563	32.7172
493	.3856	.2466	.1076	.9686	.8296	.6906	.5516	.4125	.2735	.1345	.9955	.8565	.7175
496	.3858	.2468	.1078	.9688	.8298	.6908	.5517	.4127	.2737	.1347	.9957	.8567	.7177
499	.3859	.2469	.1079	.9689	.8299	.6909	.5519	.4129	.2739	.1349	.9959	.8569	.7179
502	.3861	.2471	.1081	.9691	.8301	.6911	.5521	.4131	.2741	.1351	.9961	.8571	.7182
430505	22.3863	23.2473	24.1083	24.9693	25.8303	26.6913	27.5523	28.4133	29.2743	30.1354	30.9964	31.8574	32.7184
508	.3864	.2474	.1084	.9695	.8305	.6915	.5525	.4135	.2745	.1356	.9966	.8576	.7186
511	.3866	.2476	.1086	.9696	.8307	.6917	.5527	.4137	.2747	.1358	.9968	.8578	.7188
514	.3867	.2478	.1088	.9698	.8308	.6919	.5529	.4139	.2750	.1360	.9970	.8580	.7191
517	.3869	.2479	.1090	.9700	.8310	.6921	.5531	.4141	.2752	.1362	.9972	.8583	.7193
430520	22.3870	23.2481	24.1091	24.9702	25.8312	26.6922	27.5533	28.4143	29.2754	30.1364	30.9974	31.8585	32.7195
523	.3872	.2482	.1093	.9703	.8314	.6924	.5535	.4145	.2756	.1366	.9977	.8587	.7197
526	.3874	.2484	.1095	.9705	.8316	.6926	.5537	.4147	.2758	.1368	.9979	.8589	.7200
529	.3875	.2486	.1096	.9707	.8317	.6928	.5539	.4149	.2760	.1370	.9981	.8591	.7202
532	.3877	.2487	.1098	.9709	.8319	.6930	.5540	.4151	.2762	.1372	.9983	.8584	.7204
430535	22.3878	23.2489	24.1100	24.9710	25.8321	26.6932	27.5542	28.4153	29.2764	30.1375	30.9985	31.8596	32.7207
538	.3880	.2491	.1101	.9712	.8323	.6934	.5544	.4155	.2766	.1377	.9987	.8598	.7209
541	.3881	.2492	.1103	.9714	.8325	.6935	.5546	.4157	.2768	.1379	.9990	.8600	.7211
544	.3883	.2494	.1105	.9716	.8326	.6937	.5548	.4159	.2770	.1381	.9992	.8603	.7213
547	.3884	.2495	.1106	.9717	.8328	.6939	.5550	.4161	.2772	.1383	.9994	.8605	.7216
430550	22.3886	23.2497	24.1108	24.9719	25.8330	26.6941	27.5552	28.4163	29.2774	30.1385	30.9996	31.8607	32.7218
553	.3888	.2499	.1110	.9721	.8332	.6943	.5554	.4165	.2776	.1397	.9998	.8609	.7220
556	.3889	.2500	.1111	.9722	.8334	.6945	.5556	.4167	.2778	.1389	31.0000	.8611	.7223
559	.3891	.2502	.1113	.9724	.8335	.6947	.5558	.4169	.2780	.1391	.0002	.8614	.7225
562	.3892	.2503	.1115	.9726	.8337	.6948	.5560	.4171	.2782	.1393	.0005	.8616	.7227
430565	22.3894	23.2505	24.1116	24.9728	25.8339	26.6950	27.5562	28.4173	29.2784	30.1396	31.0007	31.8618	32.7229
568	.3895	.2507	.1118	.9729	.8341	.6952	.5564	.4175	.2786	.1398	.0009	.8620	.7232
571	.3897	.2508	.1120	.9731	.8343	.6954	.5565	.4177	.2788	.1400	.0011	.8623	.7234
574	.3898	.2510	.1121	.9733	.8344	.6956	.5567	.4179	.2790	.1402	.0013	.8625	.7236
577	.3900	.2512	.1123	.9735	.8346	.6958	.5569	.4181	.2792	.1404	.0015	.8627	.7239
430580	22.3902	23.2513	24.1125	24.9736	25.8348	26.6960	27.5571	28.4183	29.2794	30.1406	31.0018	31.8629	32.7241
583	.3903	.2515	.1126	.9738	.8350	.6961	.5573	.4185	.2796	.1408	.0020	.8631	.7243
586	.3905	.2516	.1128	.9740	.8352	.6963	.5575	.4187	.2798	.1410	.0022	.8634	.7245
589	.3906	.2518	.1130	.9742	.8353	.6965	.5577	.4189	.2801	.1412	.0024	.8636	.7248
592	.3908	.2520	.1132	.9743	.8355	.6967	.5579	.4191	.2803	.1414	.0026	.8638	.7250
430595	22.3909	23.2521	24.1133	24.9745	25.8357	26.6969	27.5581	28.4193	29.2805	30.1417	31.0028	31.8640	32.7252
598	.3911	.2523	.1135	.9747	.8359	.6971	.5583	.4195	.2807	.1419	.0031	.8643	.7254
601	.3913	.2525	.1137	.9749	.8361	.6973	.5585	.4197	.2809	.1421	.0033	.8645	.7257
604	.3914	.2526	.1138	.9750	.8362	.6974	.5587	.4199	.2811	.1423	.0035	.8647	.7259
607	.3916	.2528	.1140	.9752	.8364	.6976	.5588	.4201	.2813	.1425	.0037	.8649	.7261
430610	22.3917	23.2529	24.1142	24.9754	25.8366	26.6978	27.5590	28.4203	29.2815	30.1427	31.0039	31.8651	32.7264
613	.3919	.2531	.1143	.9756	.8368	.6980	.5592	.4205	.2817	.1429	.0041	.8654	.7266
616	.3920	.2533	.1145	.9757	.8370	.6982	.5594	.4207	.2819	.1431	.0044	.8656	.7268
619	.3922	.2534	.1147	.9759	.8371	.6984	.5596	.4209	.2821	.1433	.0046	.8658	.7270
622	.3923	.2536	.1148	.9761	.8373	.6986	.5598	.4211	.2823	.1435	.0048	.8660	.7273
430625	22.3925	23.2538	24.1150	24.9763	25.8375	26.6988	27.5600	28.4213	29.2825	30.1438	31.0050	31.8663	32.7275
628	.3927	.2539	.1152	.9764	.8377	.6989	.5602	.4214	.2827	.1440	.0052	.8665	.7277
631	.3928	.2541	.1153	.9766	.8379	.6991	.5604	.4216	.2829	.1442	.0054	.8667	.7280
634	.3930	.2542	.1155	.9768	.8380	.6993	.5606	.4218	.2831	.1444	.0056	.8669	.7282
637	.3931	.2544	.1157	.9769	.8382	.6995	.5608	.4220	.2833	.1446	.0059	.8671	.7284
430640	22.3933	23.2546	24.1158	24.9771	25.8384	26.6997	27.5610	28.4222	29.2835	30.1448	31.0061	31.8674	32.7286
643	.3934	.2547	.1160	.9773	.8386	.6999	.5612	.4224	.2837	.1450	.0063	.8676	.7289
646	.3936	.2549	.1162	.9775	.8388	.7001	.5613	.4226	.2839	.1452	.0065	.8678	.7291
649	.3937	.2550	.1163	.9776	.8389	.7002	.5615	.4228	.2841	.1454	.0067	.8680	.7293
652	.3939	.2552	.1165	.9778	.8391	.7004	.5617	.4230	.2843	.1456	.0069	.8682	.7296
430655	22.3941	23.2554	24.1167	24.9780	25.8393	26.7006	27.5619	28.4232	29.2845	30.1459	31.0072	31.8685	32.7298
658	.3942	.2555	.1168	.9782	.8395	.7008	.5621	.4234	.2847	.1461	.0074	.8687	.7300
661	.3944	.2557	.1170	.9783	.8397	.7010	.5623	.4236	.2849	.1463	.0076	.8689	.7302
664	.3945	.2559	.1172	.9785	.8398	.7012	.5625	.4238	.2852	.1465	.0078	.8691	.7305
667	.3947	.2560	.1174	.9787	.8400	.7014	.5627	.4240	.2854	.1467	.0080	.8694	.7307
430670	22.3948	23.2562	24.1175	24.9789	25.8402	26.7015	27.5629	28.4242	29.2856	30.1469	31.0082	31.8696	32.7309
673	.3950	.2563	.1177	.9790	.8404	.7017	.5631	.4244	.2858	.1471	.0085	.8698	.7311
676	.3952	.2565	.1179	.9792	.8406	.7019	.5633	.4246	.2860	.1473	.0087	.8700	.7314
679	.3953	.2567	.1180	.9794	.8407	.7021	.5635	.4248	.2862	.1475	.0089	.8702	.7316
682	.3955	.2568	.1182	.9796	.8409	.7023	.5636	.4250	.2864	.1477	.0091	.8705	.7318
430685	22.3956	23.2570	24.1184	24.9797	25.8411	26.7025	27.5638	28.4252	29.2866	30.1480	31.0093	31.8707	32.7321
688	.3958	.2572	.1185	.9799	.8413	.7027	.5640	.4254	.2868	.1482	.0095	.8709	.7323
691	.3959	.2573	.1187	.9801	.8415	.7028	.5642	.4256	.2870	.1484	.0098	.8711	.7325
694	.3961	.2575	.1189	.9803	.8416	.7030	.5644	.4258	.2872	.1486	.0100	.8714	.7327
697	.3962	.2576	.1190	.9804	.8418	.7032	.5646	.4260	.2874	.1488	.0102	.8716	.7330
430700	22.3964	23.2578	24.1192	24.9806	25.8420	26.7034	27.5648	28.4262	29.2876	30.1490	31.0104	31.8718	32.7332

MEGACYCLES PER SECOND

H A R M O N I C S

BASIC FREQ.	78	80	82	84	86	88	90	92	94	96	100	104	108
430400	33.5712	34.4320	35.2982	36.1536	37.0144	37.8752	38.7360	39.5968	40.4576	41.3184	43.0400	44.7616	46.4832
403	.5714	.4322	.2930	.1539	.0147	.8755	.7363	.5971	.4579	.3187	.0403	.7619	.4835
406	.5717	.4325	.2933	.1541	.0149	.8757	.7365	.5974	.4582	.3190	.0406	.7622	.4838
409	.5719	.4327	.2935	.1544	.0152	.8760	.7368	.5976	.4584	.3193	.0409	.7625	.4842
412	.5721	.4330	.2938	.1546	.0154	.8763	.7371	.5979	.4587	.3196	.0412	.7628	.4845
430415	33.5724	34.4332	35.2940	36.1549	37.0157	37.8765	38.7374	39.5982	40.4590	41.3198	43.0415	44.7632	46.4848
418	.5726	.4334	.2943	.1551	.0159	.8768	.7376	.5985	.4593	.3201	.0418	.7635	.4851
421	.5728	.4337	.2945	.1554	.0162	.8770	.7379	.5987	.4596	.3204	.0421	.7638	.4855
424	.5731	.4339	.2948	.1556	.0165	.8773	.7382	.5990	.4599	.3207	.0424	.7641	.4858
427	.5733	.4342	.2950	.1559	.0167	.8776	.7384	.5993	.4601	.3210	.0427	.7644	.4861
430430	33.5735	34.4344	35.2953	36.1561	37.0170	37.8778	38.7387	39.5996	40.4604	41.3213	43.0430	44.7647	46.4864
433	.5738	.4346	.2955	.1564	.0172	.8781	.7390	.5998	.4607	.3216	.0433	.7650	.4868
436	.5740	.4349	.2958	.1566	.0175	.8784	.7392	.6001	.4610	.3219	.0436	.7653	.4871
439	.5742	.4351	.2960	.1569	.0178	.8786	.7395	.6004	.4613	.3221	.0439	.7657	.4874
442	.5745	.4354	.2962	.1571	.0180	.8789	.7398	.6007	.4615	.3224	.0442	.7660	.4877
430445	33.5747	34.4356	35.2965	36.1574	37.0183	37.8792	38.7401	39.6009	40.4618	41.3227	43.0445	44.7663	46.4881
448	.5749	.4358	.2967	.1576	.0185	.8794	.7403	.6012	.4621	.3230	.0448	.7666	.4884
451	.5752	.4361	.2970	.1579	.0188	.8797	.7406	.6015	.4624	.3233	.0451	.7669	.4887
454	.5754	.4363	.2972	.1581	.0190	.8800	.7409	.6018	.4627	.3236	.0454	.7672	.4890
457	.5756	.4366	.2975	.1584	.0193	.8802	.7411	.6020	.4630	.3239	.0457	.7675	.4894
430460	33.5759	34.4368	35.2977	36.1586	37.0196	37.8805	38.7414	39.6023	40.4632	41.3242	43.0460	44.7678	46.4897
463	.5761	.4370	.2980	.1589	.0198	.8807	.7417	.6026	.4635	.3244	.0463	.7682	.4900
466	.5763	.4373	.2982	.1591	.0201	.8810	.7419	.6029	.4638	.3247	.0466	.7685	.4903
469	.5766	.4375	.2985	.1594	.0203	.8813	.7422	.6031	.4641	.3250	.0469	.7688	.4907
472	.5768	.4378	.2987	.1596	.0206	.8815	.7425	.6034	.4644	.3253	.0472	.7691	.4910
430475	33.5771	34.4380	35.2990	36.1599	37.0209	37.8818	38.7428	39.6037	40.4647	41.3256	43.0475	44.7694	46.4913
478	.5773	.4382	.2992	.1602	.0211	.8821	.7430	.6040	.4649	.3259	.0478	.7697	.4916
481	.5775	.4385	.2994	.1604	.0214	.8823	.7433	.6043	.4652	.3262	.0481	.7700	.4919
484	.5778	.4387	.2997	.1607	.0216	.8826	.7436	.6045	.4655	.3265	.0484	.7703	.4923
487	.5780	.4390	.2999	.1609	.0219	.8829	.7438	.6048	.4658	.3268	.0487	.7706	.4926
430490	33.5782	34.4392	35.3002	36.1612	37.0221	37.8831	38.7441	39.6051	40.4661	41.3270	43.0490	44.7710	46.4929
493	.5785	.4394	.3004	.1614	.0224	.8834	.7444	.6054	.4663	.3273	.0493	.7713	.4932
496	.5787	.4397	.3007	.1617	.0227	.8836	.7446	.6056	.4666	.3276	.0496	.7716	.4936
499	.5789	.4399	.3009	.1619	.0229	.8839	.7449	.6059	.4669	.3279	.0499	.7719	.4939
502	.5792	.4402	.3012	.1622	.0232	.8842	.7452	.6062	.4672	.3282	.0502	.7722	.4942
430505	33.5794	34.4404	35.3014	36.1624	37.0234	37.8844	38.7455	39.6065	40.4675	41.3285	43.0505	44.7725	46.4945
508	.5796	.4406	.3017	.1627	.0237	.8847	.7457	.6067	.4678	.3288	.0508	.7728	.4949
511	.5799	.4409	.3019	.1629	.0239	.8850	.7460	.6070	.4680	.3291	.0511	.7731	.4952
514	.5801	.4411	.3021	.1632	.0242	.8852	.7463	.6073	.4683	.3293	.0514	.7735	.4955
517	.5803	.4414	.3024	.1634	.0245	.8855	.7465	.6076	.4686	.3296	.0517	.7738	.4958
430520	33.5806	34.4416	35.3026	36.1637	37.0247	37.8858	38.7468	39.6078	40.4689	41.3299	43.0520	44.7741	46.4962
523	.5808	.4418	.3029	.1639	.0250	.8860	.7471	.6081	.4692	.3302	.0523	.7744	.4965
526	.5810	.4421	.3031	.1642	.0252	.8863	.7473	.6084	.4694	.3305	.0526	.7747	.4968
529	.5813	.4423	.3034	.1644	.0255	.8866	.7476	.6087	.4697	.3308	.0529	.7750	.4971
532	.5815	.4426	.3036	.1647	.0258	.8868	.7479	.6089	.4700	.3311	.0532	.7753	.4975
430535	33.5817	34.4428	35.3039	36.1649	37.0260	37.8871	38.7482	39.6092	40.4703	41.3314	43.0435	44.7756	46.4978
538	.5820	.4430	.3041	.1652	.0263	.8873	.7484	.6095	.4706	.3316	.0538	.7760	.4981
541	.5822	.4433	.3044	.1654	.0265	.8876	.7487	.6098	.4709	.3319	.0541	.7763	.4984
544	.5824	.4435	.3046	.1657	.0268	.8879	.7490	.6100	.4711	.3322	.0544	.7766	.4988
547	.5827	.4438	.3049	.1659	.0270	.8881	.7492	.6103	.4714	.3325	.0547	.7769	.4991
430550	33.5829	34.4440	35.3051	36.1662	37.0273	37.8884	38.7495	39.6106	40.4717	41.3328	43.0550	44.7772	46.4994
553	.5831	.4442	.3053	.1665	.0276	.8887	.7498	.6109	.4720	.3331	.0553	.7775	.4997
556	.5834	.4445	.3056	.1667	.0278	.8889	.7500	.6112	.4723	.3334	.0556	.7778	.5000
559	.5836	.4447	.3058	.1670	.0281	.8892	.7503	.6114	.4725	.3337	.0559	.7781	.5004
562	.5838	.4450	.3061	.1672	.0283	.8895	.7506	.6117	.4728	.3340	.0562	.7784	.5007
430565	33.5841	34.4452	35.3063	36.1675	37.0286	37.8897	38.7509	39.6120	40.4731	41.3342	43.0565	44.7788	46.5010
568	.5843	.4454	.3066	.1677	.0288	.8900	.7511	.6123	.4734	.3345	.0568	.7791	.5013
571	.5845	.4457	.3068	.1680	.0291	.8902	.7514	.6125	.4737	.3348	.0571	.7794	.5017
574	.5848	.4459	.3071	.1682	.0294	.8905	.7517	.6128	.4740	.3351	.0574	.7797	.5020
577	.5850	.4462	.3073	.1685	.0296	.8908	.7519	.6131	.4742	.3354	.0577	.7800	.5023
430580	33.5852	34.4464	35.3076	36.1687	37.0399	37.8910	38.7522	39.6134	40.4745	41.3357	43.0580	44.7803	46.5026
583	.5855	.4466	.3078	.1690	.0301	.8913	.7525	.6136	.4748	.3360	.0583	.7806	.5030
586	.5857	.4469	.3081	.1692	.0304	.8916	.7527	.6139	.4751	.3363	.0586	.7809	.5033
589	.5859	.4471	.3083	.1695	.0307	.8918	.7530	.6142	.4754	.3365	.0589	.7813	.5036
592	.5862	.4474	.3085	.1697	.0309	.8921	.7533	.6145	.4756	.3368	.0592	.7816	.5039
430595	33.5864	34.4476	35.3088	36.1700	37.0312	37.8924	38.7536	39.6147	40.4759	41.3371	43.0595	44.7819	46.5043
598	.5866	.4478	.3090	.1702	.0314	.8926	.7538	.6150	.4762	.3374	.0598	.7822	.5046
601	.5869	.4481	.3093	.1705	.0317	.8929	.7541	.6153	.4765	.3377	.0601	.7825	.5049
604	.5871	.4483	.3095	.1707	.0319	.8932	.7544	.6156	.4768	.3380	.0604	.7828	.5052
607	.5873	.4486	.3098	.1710	.0322	.8934	.7546	.6158	.4771	.3383	.0607	.7831	.5056
430610	33.5876	34.4488	35.3100	36.1712	37.0325	37.8937	38.7549	39.6161	40.4773	41.3386	43.0610	44.7834	46.5059
613	.5878	.4490	.3103	.1715	.0327	.8939	.7552	.6164	.4776	.3388	.0613	.7838	.5062
616	.5880	.4493	.3105	.1717	.0330	.8942	.7554	.6167	.4779	.3391	.0616	.7841	.5065
619	.5883	.4495	.3108	.1720	.0332	.8945	.7557	.6169	.4782	.3394	.0619	.7844	.5069
622	.5885	.4498	.3110	.1722	.0335	.8947	.7560	.6172	.4785	.3397	.0622	.7847	.5072
430625	33.5888	34.4500	35.3113	36.1725	37.0338	37.8950	38.7563	39.6175	40.4788	41.3400	43.0625	44.7850	46.5075
628	.5890	.4502	.3115	.1728	.0340	.8953	.7565	.6178	.4790	.3403	.0628	.7853	.5078
631	.5892	.4505	.3117	.1730	.0343	.8955	.7568	.6181	.4793	.3406	.0631	.7856	.5081
634	.5895	.4507	.3120	.1733	.0345	.8958	.7571	.6183	.4796	.3409	.0634	.7859	.5085
637	.5897	.4510	.3122	.1735	.0348	.8961	.7573	.6186	.4799	.3412	.0637	.7862	.5088
430640	33.5899	34.4512	35.3125	36.1738	37.0350	37.8963	38.7576	39.6189	40.4802	41.3414	43.0640	44.7866	46.5091
643	.5902	.4514	.3127	.1740	.0353	.8966	.7579	.6192	.4804	.3417	.0643	.7869	.5094
646	.5904	.4517	.3130	.1743	.0356	.8968	.7581	.6194	.4807	.3420	.0646	.7872	.5098
649	.5906	.4519	.3132	.1745	.0358	.8971	.7584	.6197	.4810	.3423	.0649	.7875	.5101
652	.5909	.4522	.3135	.1748	.0361	.8974	.7587	.6200	.4813	.3426	.0652	.7878	.5104
430655	33.5911	34.4524	35.3137	36.1750	37.0363	37 8976	38.7590	39.6203	40.4816	41.3429	43.0655	44.7881	46.5107
658	.5913	.4526	.3140	.1753	.0366	.8979	.7592	.6205	.4819	.3432	.0658	.7884	.5111
661	.5916	.4529	.3142	.1755	.0368	.8982	.7595	.6208	.4821	.3435	.0661	.7887	.5114
664	.5918	.4531	.3144	.1758	.0371	.8984	.7598	.6211	.4824	.3437	.0664	.7891	.5117
667	.5920	.4534	.3147	.1760	.0374	.8987	.7600	.6214	.4827	.3440	.0667	.7894	.5120
430670	33.5923	34.4536	35.3149	36.1763	37.0376	37.8990	38.7603	39.6216	40.4830	41.3443	43.0670	44.7897	46.5124
673	.5925	.4538	.3152	.1765	.0379	.8992	.7606	.6219	.4833	.3446	.0673	.7900	.5127
676	.5927	.4541	.3154	.1768	.0381	.8995	.7608	.6222	.4835	.3449	.0676	.7903	.5130
679	.5930	.4543	.3157	.1770	.0384	.8998	.7611	.6225	.4838	.3452	.0679	.7906	.5133
682	.5932	.4546	.3159	.1773	.0387	.9000	.7614	.6227	.4841	.3455	.0682	.7909	.5137
430685	33.5934	34.4548	35.3162	36.1775	37.0389	37.9003	38.7617	39.6230	40.4844	41.3458	43.0685	44.7912	46.5140
688	.5937	.4550	.3164	.1778	.0392	.9005	.7619	.6233	.4847	.3460	.0688	.7916	.5143
691	.5939	.4553	.3167	.1780	.0394	.9008	.7622	.6236	.4850	.3463	.0691	.7919	.5146
694	.5941	.4555	.3169	.1783	.0397	.9011	.7625	.6238	.4852	.3466	.0694	.7922	.5150
697	.5944	.4558	.3172	.1785	.0399	.9013	.7627	.6241	.4855	.3469	.0697	.7925	.5153
430700	33.5946	34.4560	35.3174	36.1788	37.0402	37.9016	38.7630	39.6244	40.4858	41.3472	43.0700	44.7928	46.5156

HARMONICS

BASIC FREQ.	52	54	56	58	60	62	64	66	68	70	72	74	76
430700	22.3964	23.2578	24.1192	24.9806	25.8420	26.7034	27.5648	28.4262	29.2876	30.1490	31.0104	31.8718	32.7332
703	.3966	.2580	.1194	.9808	.8422	.7036	.5650	.4264	.2878	.1492	.0106	.8720	.7334
706	.3967	.2581	.1195	.9809	.8424	.7038	.5652	.4266	.2880	.1494	.0108	.8722	.7337
709	.3969	.2583	.1197	.9811	.8425	.7040	.5654	.4268	.2882	.1496	.0110	.8725	.7339
712	.3970	.2584	.1199	.9813	.8427	.7041	.5656	.4270	.2884	.1498	.0113	.8727	.7341
430715	22.3972	23.2586	24.1200	24.9815	25.8429	26.7043	27.5658	28.4272	29.2886	30.1501	31.0115	31.8729	32.7343
718	.3973	.2588	.1202	.9816	.8431	.7045	.5660	.4274	.2888	.1503	.0117	.8731	.7346
721	.3975	.2589	.1204	.9818	.8433	.7047	.5661	.4276	.2890	.1505	.0119	.8734	.7348
724	.3976	.2591	.1205	.9820	.8434	.7049	.5663	.4278	.2892	.1507	.0121	.8736	.7350
727	.3978	2593	.1207	.9822	.8436	.7051	.5665	.4280	.2894	.1509	.0123	.8738	.7353
430730	22.3980	23.2594	24.1209	24.9823	25.8438	26.7053	27.5667	28.4282	29.2896	30.1511	31.0126	31.8740	32.7355
733	.3981	.2596	.1210	.9825	.8440	.7054	.5669	.4284	.2898	.1513	.0128	.8742	.7357
736	.3983	.2597	.1212	.9827	.8442	.7056	.5671	.4286	.2900	.1515	.0130	.8745	.7359
739	.3984	.2599	.1214	.9829	.8443	.7058	.5673	.4288	.2903	.1517	.0132	.8747	.7362
742	.3986	.2601	.1216	.9830	.8445	.7060	.5675	.4290	.2905	.1519	.0134	.8749	.7364
430745	22.3987	23.2602	24.1217	24.9832	25.8447	26.7062	27.5677	28.4292	29.2907	30.1522	31.0136	31.8751	32.7366
748	.3989	.2604	.1219	.9834	.8449	.7064	.5679	.4294	.2909	.1524	.0139	.8754	.7368
751	.3991	.2606	.1221	.9836	.8451	.7066	.5681	.4296	.2911	.1526	.0141	.8756	.7371
754	.3992	.2607	.1222	.9837	.8452	.7067	.5683	.4298	.2913	.1528	.0143	.8758	.7373
757	.3994	.2609	.1224	.9839	.8454	.7069	.5684	.4300	.2915	.1530	.0145	.8760	.7375
430760	22.3995	23.2610	24.1226	24.9841	25.8456	26.7071	27.5686	28.4302	29.2917	30.1532	31.0147	31.8762	32.7378
763	.3997	.2612	.1227	.9843	.8458	.7073	.5688	.4304	.2919	.1534	.0149	.8765	.7380
766	.3998	.2614	.1229	.9844	.8460	.7075	.5690	.4306	.2921	.1536	.0152	.8767	.7382
769	.4000	.2615	.1231	.9846	.8461	.7077	.5692	.4308	.2923	.1538	.0154	.8769	.7384
772	.4001	.2617	.1232	.9848	.8463	.7079	.5694	.4310	.2925	.1540	.0156	.8771	.7387
430775	22.4003	23.2619	24.1234	24.9850	25.8465	26.7081	27.5696	28.4312	29.2927	30.1543	31.0158	31.8774	32.7389
778	.4005	.2620	.1236	.9851	.8467	.7082	.5698	.4313	.2929	.1545	.0160	.8776	.7391
781	.4006	.2622	.1237	.9853	.8469	.7084	.5700	.4315	.2931	.1547	.0162	.8778	.7394
784	.4008	.2623	.1239	.9855	.8470	.7086	.5702	.4317	.2933	.1549	.0164	.8780	.7396
787	.4009	.2625	.1241	.9856	.8472	.7088	.5704	.4319	.2935	.1551	.0167	.8782	.7398
430790	22.4011	23.2627	24.1242	24.9858	25.8474	26.7090	27.5706	28.4321	29.2937	30.1553	31.0169	31.8785	32.7400
793	.4012	.2628	.1244	.9860	.8476	.7092	.5708	.4323	.2939	.1555	.0171	.8787	.7403
796	.4014	.2630	.1246	.9862	.8478	.7094	.5709	.4325	.2941	.1557	.0173	.8789	.7405
799	.4015	.2631	.1247	.9863	.8479	.7095	.5711	.4327	.2943	.1559	.0175	.8791	.7407
802	.4017	.2633	.1249	.9865	.8481	.7097	.5713	.4329	.2945	.1561	.0177	.8793	.7410
430805	22.4019	23.2635	24.1251	24.9867	25.8483	26.7099	27.5715	28.4331	29.2947	30.1564	31.0180	31.8796	32.7412
808	.4020	.2636	.1252	.9869	.8485	.7101	.5717	.4333	.2949	.1566	.0182	.8798	.7414
811	.4022	.2638	.1254	.9870	.8487	.7103	.5719	.4335	.2951	.1568	.0184	.8800	.7416
814	.4023	.2640	.1256	.9872	.8488	.7105	.5721	.4337	.2954	.1570	.0186	.8802	.7419
817	.4025	.2641	.1258	.9874	.8490	.7107	.5723	.4339	.2956	.1572	.0188	.8805	.7421
430820	22.4026	23.2643	24.1259	24.9876	25.8492	26.7108	27.5725	28.4341	29.2958	30.1574	31.0190	31.8807	32.7423
823	.4028	.2644	.1261	.9877	.8494	.7110	.5727	.4343	.2960	.1576	.0193	.8809	.7425
826	.4030	.2646	.1263	.9879	.8496	.7112	.5729	.4345	.2962	.1578	.0195	.8811	.7428
829	.4031	.2648	.1264	.9881	.8497	.7114	.5731	.4347	.2964	.1580	.0197	.8813	.7430
832	.4033	.2649	.1266	.9883	.8499	.7116	.5732	.4349	.2966	.1582	.0199	.8816	.7432
430835	22.4034	23.2651	24.1268	24.9884	25.8501	26.7118	27.5734	28.4351	29.2968	30.1585	31.0201	31.8818	32.7435
838	.4036	.2653	.1269	.9886	.8503	.7120	.5736	.4353	.2970	.1587	.0203	.8820	.7437
841	.4037	.2654	.1271	.9888	.8505	.7121	.5738	.4355	.2972	.1589	.0206	.8822	.7439
844	.4039	.2656	.1273	.9890	.8506	.7123	.5740	.4357	.2974	.1591	.0208	.8825	.7441
847	.4040	.2657	.1274	.9891	.8508	.7125	.5742	.4359	.2976	.1593	.0210	.8827	.7444
430850	22.4042	23.2659	24.1276	24.9893	25.8510	26.7127	27.5744	28.4361	29.2978	30.1595	31.0212	31.8829	32.7446
853	.4044	.2661	.1278	.9895	.8512	.7129	.5746	.4363	.2980	.1597	.0214	.8831	.7448
856	.4045	.2662	.1279	.9896	.8514	.7131	.5748	.4365	.2982	.1599	.0216	.8833	.7451
859	.4047	.2664	.1281	.9898	.8515	.7133	.5750	.4367	.2984	.1601	.0218	.8836	.7453
862	.4048	.2665	.1283	.9900	.8517	.7134	.5752	.4369	.2986	.1603	.0221	.8838	.7455
430865	22.4050	23.2667	24.1284	24.9902	25.8519	26.7136	27.5754	28.4371	29.2988	30.1606	31.0223	31.8840	32.7457
868	.4051	.2669	.1286	.9903	.8521	.7138	.5756	.4373	.2990	.1608	.0225	.8842	.7460
871	.4053	.2670	.1288	.9905	.8523	.7140	.5757	.4375	.2992	.1610	.0227	.8845	.7462
874	.4054	.2672	.1289	.9907	.8524	.7142	.5759	.4377	.2994	.1612	.0229	.8847	.7464
877	.4056	.2674	.1291	.9909	.8526	.7144	.5761	.4379	.2996	.1614	.0231	.8849	.7467
430880	22.4058	23.2675	24.1293	24.9910	25.8528	26.7146	27.5763	28.4381	29.2998	30.1616	31.0234	31.8851	32.7469
883	.4059	.2677	.1294	.9912	.8530	.7147	.5765	.4383	.3000	.1618	.0236	.8853	.7471
886	.4061	.2678	.1296	.9914	.8532	.7149	.5767	.4385	.3002	.1620	.0238	.8856	.7473
889	.4062	.2680	.1298	.9916	.8533	.7151	.5769	.4387	.3005	.1622	.0240	.8858	.7476
892	.4064	.2682	.1300	.9917	.8535	.7153	.5771	.4389	.3007	.1624	.0242	.8860	.7478
430895	22.4065	23.2683	24.1301	24.9919	25.8537	26.7155	27.5773	28.4391	29.3009	30.1627	31.0244	31.8862	32.7480
898	.4067	.2685	.1303	.9921	.8539	.7157	.5775	.4393	.3011	.1629	.0247	.8865	.7483
901	.4069	.2687	.1305	.9923	.8541	.7159	.5777	.4395	.3013	.1631	.0249	.8867	.7485
904	.4070	.2688	.1306	.9924	.8542	.7160	.5779	.4397	.3015	.1633	.0251	.8869	.7487
907	.4072	.2690	.1308	.9926	.8544	.7162	.5780	.4399	.3017	.1635	.0253	.8871	.7489
430910	22.4073	23.2691	24.1310	24.9928	25.8546	26.7164	27.5782	28.4401	29.3019	30.1637	31.0255	31.8873	32.7492
913	.4075	.2693	.1311	.9930	.8548	.7166	.5784	.4403	.3021	.1639	.0257	.8876	.7494
916	.4076	.2695	.1313	.9931	.8550	.7168	.5786	.4405	.3023	.1641	.0260	.8878	.7496
919	.4078	.2696	.1315	.9933	.8551	.7170	.5788	.4407	.3025	.1643	.0262	.8880	.7498
922	.4079	.2698	.1316	.9935	.8553	.7172	.5790	.4409	.3027	.1645	.0264	.8882	.7501
430925	22.4081	23.2700	24.1318	24.9937	25.8555	26.7174	27.5792	28.4411	29.3029	30.1648	31.0266	31.8885	32.7503
928	.4083	.2701	.1320	.9938	.8557	.7175	.5794	.4412	.3031	.1650	.0268	.8887	.7505
931	.4084	.2703	.1321	.9940	.8559	.7177	.5796	.4414	.3033	.1652	.0270	.8889	.7508
934	.4086	.2704	.1323	.9942	.8560	.7179	.5798	.4416	.3035	.1654	.0272	.8891	.7510
937	.4087	.2706	.1325	.9943	.8562	.7181	.5800	.4418	.3037	.1656	.0275	.8893	.7512
430940	22.4089	23.2708	24.1326	24.9945	25.8564	26.7183	27.5802	28.4420	29.3039	30.1658	31.0277	31.8896	32.7514
943	.4090	.2709	.1328	.9947	.8566	.7185	.5804	.4422	.3041	.1660	.0279	.8898	.7517
946	.4092	.2711	.1330	.9949	.8568	.7187	.5805	.4424	.3043	.1662	.0281	.8900	.7519
949	.4093	.2712	.1331	.9950	.8569	.7188	.5807	.4426	.3045	.1664	.0283	.8902	.7521
952	.4095	.2714	.1333	.9952	.8571	.7190	.5809	.4428	.3047	.1666	.0285	.8904	.7524
430955	22.4097	23.2716	24.1335	24.9954	25.8573	26.7192	27.5811	28.4430	29.3049	30.1669	31.0288	31.8907	32.7526
958	.4098	.2717	.1336	.9956	.8575	.7194	.5813	.4432	.3051	.1671	.0290	.8909	.7528
961	.4100	.2719	.1338	.9957	.8577	.7196	.5815	.4434	.3053	.1673	.0292	.8911	.7530
964	.4101	.2721	.1340	.9959	.8578	.7198	.5817	.4436	.3056	.1675	.0294	.8913	.7533
967	.4103	.2722	.1342	.9961	.8580	.7200	.5819	.4438	.3058	.1677	.0296	.8916	.7535
430970	22.4104	23.2724	24.1343	24.9963	25.8582	26.7201	27.5821	28.4440	29.3060	30.1679	31.0298	31.8918	32.7537
973	.4106	.2725	.1345	.9964	.8584	.7203	.5823	.4442	.3062	.1681	.0301	.8920	.7539
976	.4108	.2727	.1347	.9966	.8586	.7205	.5825	.4444	.3064	.1683	.0303	.8922	.7542
979	.4109	.2729	.1348	.9968	.8587	.7207	.5827	.4446	.3066	.1685	.0305	.8924	.7544
982	.4111	.2730	.1350	.9970	.8589	.7209	.5828	.4448	.3068	.1687	.0307	.8927	.7546
430985	22.4112	23.2732	24.1352	24.9971	25.8591	26.7211	27.5830	28.4450	29.3070	30.1690	31.0309	31.8929	32.7549
988	.4114	.2734	.1353	.9973	.8593	.7213	.5832	.4452	.3072	.1692	.0311	.8931	.7551
991	.4115	.2735	.1355	.9975	.8595	.7214	.5834	.4454	.3074	.1694	.0314	.8933	.7553
994	.4117	.2737	.1357	.9977	.8596	.7216	.5836	.4456	.3076	.1696	.0316	.8936	.7555
997	.4118	.2738	.1358	.9978	.8598	.7218	.5838	.4458	.3078	.1698	.0318	.8938	.7558
431000	22.4120	23.2740	24.1360	24.9980	25.8600	26.7220	27.5840	28.4460	29.3080	30.1700	31.0320	31.8940	32.7560

MEGACYCLES PER SECOND

BASIC FREQ.	HARMONICS 78	80	82	84	86	88	90	92	94	96	100	104	108
430700	33.5946	34.4560	35.3174	36.1788	37.0402	37.9016	38.7630	39.6244	40.4858	41.3472	43.0700	44.7928	46.5156
703	.5948	.4562	.3176	.1791	.0405	.9019	.7633	.6247	.4861	.3475	.0703	.7931	.5159
706	.5951	.4565	.3179	.1793	.0407	.9021	.7635	.6250	.4864	.3478	.0706	.7934	.5162
709	.5953	.4567	.3181	.1796	.0410	.9024	.7638	.6252	.4866	.3481	.0709	.7937	.5166
712	.5955	.4570	.3184	.1798	.0412	.9027	.7641	.6255	.4869	.3484	.0712	.7940	.5169
430715	33.5958	34.4572	35.3186	36.1801	37.0415	37.9029	38.7644	39.6258	40.4872	41.3486	43.0715	44.7944	46.5172
718	.5960	.4574	.3189	.1803	.0417	.9032	.7646	.6261	.4875	.3489	.0718	.7947	.5175
721	.5962	.4577	.3191	.1806	.0420	.9034	.7649	.6263	.4878	.3492	.0721	.7950	.5179
724	.5965	.4579	.3194	.1808	.0423	.9037	.7652	.6266	.4881	.3495	.0724	.7953	.5182
727	.5967	.4582	.3196	.1811	.0425	.9040	.7654	.6269	.4883	.3498	.0727	.7956	.5185
430730	33.5969	34.4584	35.3199	36.1813	37.0428	37.9042	38.7657	39.6272	40.4886	41.3501	43.0730	44.7959	46.5188
733	.5972	.4586	.3201	.1816	.0430	.9045	.7660	.6274	.4889	.3504	.0733	.7962	.5192
736	.5974	.4589	.3204	.1818	.0433	.9048	.7662	.6277	.4892	.3507	.0736	.7965	.5195
739	.5976	.4591	.3206	.1821	.0436	.9050	.7665	.6280	.4895	.3509	.0739	.7969	.5198
742	.5979	.4594	.3208	.1823	.0438	.9053	.7668	.6283	.4897	.3512	.0742	.7972	.5201
430745	33.5981	34.4596	35.3211	36.1826	37.0441	37.9056	38.7671	39.6285	40.4900	41.3515	43.0745	44.7975	46.5205
748	.5983	.4598	.3213	.1828	.0443	.9058	.7673	.6288	.4903	.3518	.0748	.7978	.5208
751	.5986	.4601	.3216	.1831	.0446	.9061	.7676	.6291	.4906	.3521	.0751	.7981	.5211
754	.5988	.4603	.3218	.1833	.0448	.9064	.7679	.6294	.4909	.3524	.0754	.7984	.5214
757	.5990	.4606	.3221	.1836	.0451	.9066	.7681	.6296	.4912	.3527	.0757	.7987	.5218
430760	33.5993	34.4608	35.3223	36.1838	37.0454	37.9069	38.7684	39.6299	40.4914	41.3530	43.0760	44.7990	46.5221
763	.5995	.4610	.3226	.1841	.0456	.9071	.7687	.6302	.4917	.3532	.0763	.7994	.5224
766	.5997	.4613	.3228	.1843	.0459	.9074	.7689	.6305	.4920	.3535	.0766	.7997	.5227
769	.6000	.4615	.3231	.1846	.0461	.9077	.7692	.6307	.4923	.3538	.0769	.8000	.5231
772	.6002	.4618	.3233	.1848	.0464	.9079	.7695	.6310	.4926	.3541	.0772	.8003	.5234
430775	33.6005	34.4620	35.3236	36.1851	37.0467	37.8082	38.7698	39.6313	40.4929	41.3544	43.0775	44.8006	46.5237
778	.6007	.4622	.3238	.1854	.0469	.9085	.7700	.6316	.4931	.3547	.0778	.8009	.5240
781	.6009	.4625	.3240	.1856	.0472	.9087	.7703	.6319	.4934	.3550	.0781	.8012	.5243
784	.6012	.4627	.3243	.1859	.0474	.9090	.7706	.6321	.4937	.3553	.0784	.8015	.5247
787	.6014	.4630	.3245	.1861	.0477	.9093	.7708	.6324	.4940	3556	.0787	.8018	.5250
430790	33.6016	34.4632	35.3248	36.1864	37.0479	37.9095	38.7711	39.6327	40.4943	41.3558	43.0790	44.8022	46.5253
793	.6019	.4634	.3250	.1866	.0482	.9098	.7714	.6330	.4945	.3561	.0793	.8025	.5256
796	.6021	.4637	.3253	.1869	.0485	.9100	.7716	.6332	.4948	.3564	.0796	.8028	.5260
799	.6023	.4639	.3255	.1871	.0487	.9103	.7719	.6335	.4951	.3567	.0799	.8031	.5263
802	.6026	.4642	.3258	.1874	.0490	.9106	.7722	.6338	.4954	.3570	.0802	.8034	.5266
430805	33.6028	34.4644	35.3260	36.1876	37.0492	37.9108	38.7725	39.6341	40.4957	41.3573	43.0805	44.8037	46.5269
808	.6030	.4646	.3263	.1879	.0495	.9111	.7727	.6343	.4960	.3576	.0808	.8040	.5273
811	.6033	.4649	.3265	.1881	.0497	.9114	.7730	.8346	.4962	.3579	.0811	.8043	.5276
814	.6035	.4651	.3267	.1884	.0500	.9116	.7733	.6349	.4965	.3581	.0814	.8047	.5279
817	.6037	.4654	.3270	.1886	.0503	.9119	.7735	.6352	.4968	.3584	.0817	.8050	.5282
430820	33.6040	34.4656	35.3272	36.1889	37.0505	37.9122	38.7738	39.6354	40.4971	41.3587	43.0820	44.8053	46.5286
823	.6042	.4648	.3275	1891	.0508	.9124	.7741	.6357	.4974	.3590	.0823	.8056	.5289
826	.6044	.4661	.3277	.1894	.0510	.9127	.7743	.6360	.4976	.3593	.0826	.8059	.5292
829	.6047	.4663	.3280	.1896	.0513	.9130	.7746	.6363	.4979	.3596	.0829	.8062	.5295
832	.6049	.4666	.3282	.1899	.0516	.9132	.7749	.6365	.4982	.3599	.0832	.8065	.5299
430835	33.6051	34.4668	35.3285	36.1901	37.0518	37.9135	38.7752	39.6368	40.4985	41.3602	43.0835	44.8068	46.5302
838	.6054	.4670	.3287	.1904	.0521	.9137	.7754	.6371	.4988	.3604	.0838	.8072	.5305
841	.6056	.4673	.3290	.1906	.0523	.9140	.7757	.6374	.4991	.3607	.0841	.8075	.5308
844	.6058	.4675	.3292	.1909	.0526	.9143	.7760	.6376	.4993	.3610	.0844	.8078	.5312
847	.6061	.4678	.3295	.1911	.0528	.9145	.7762	.6379	.4996	.3613	.0847	.8081	.5315
430850	33.6063	34.4680	35.3297	36.1914	37.0531	37.9148	38.7765	39.6382	40.4999	41.3616	43.0850	44.8084	46.5318
853	.6065	.4682	.3299	.1917	.0534	.9151	.7768	.6385	.5002	.3619	.0853	.8087	.5321
856	.6068	.4685	.3302	.1919	.0536	.9153	.7770	.6388	.5005	.3622	.0856	.8090	.5324
859	.6070	.4687	.3304	.1922	.0539	.9156	.7773	.6390	.5007	.3625	.0859	.8093	.5328
862	.6072	.4690	.3307	.1924	.0541	.9159	.7776	.6393	.5010	.3628	.0862	.8096	.5331
430865	33.6075	34.4692	35.3309	36.1927	37.0544	37.9161	38.7779	39.6396	40.5013	41.3630	43.0865	44.8100	46.5334
868	.6077	.4694	.3312	.1929	.0546	.9164	.7781	.6399	.5016	.3633	.0868	.8103	.5337
871	.6079	.4697	.3314	.1932	.0549	.9166	.7784	.6401	.5019	.3636	.0871	.8106	.5341
874	.6082	.4699	.3317	.1934	.0552	.9169	.7787	.6404	.5022	.3639	.0874	.8109	.5344
877	.6084	.4702	.3319	.1937	.0554	.9172	.7789	.6407	.5024	.3642	.0877	.8112	.5347
430880	33.6086	34.4704	35.3322	36.1939	37.0557	37.9174	38.7792	39.6410	40.5027	41.3645	43.0880	44.8115	46.5350
883	.6089	.4706	.3324	.1942	.0559	.9177	.7795	.6412	.5030	.3648	.0883	.8118	.5354
886	.6091	.4709	.3327	.1944	.0562	.9180	.7797	.6415	.5033	.3651	.0886	.8121	.5357
889	.6093	.4711	.3329	.1947	.0565	.9182	.7800	.6418	.5036	.3653	.0889	.8125	.5360
892	.6096	.4714	.3331	.1949	.0567	.9185	.7803	.6421	.5038	.3656	.0892	.8128	.5363
430895	33.6098	34.4716	35.3334	36.1952	37.0570	37.9188	38.7806	39.6423	40.5041	41.3659	43.0895	44.8131	46.5367
898	.6100	.4718	.3336	.1954	.0572	.9190	.7808	.6426	.5044	.3662	.0898	.8134	.5370
901	.6103	.4721	.3339	.1957	.0575	.9193	.7811	.6429	.5047	.3665	.0901	.8137	.5373
904	.6105	.4723	.3341	.1959	.0577	.9196	.7814	.6432	.5050	.3668	.0904	.8140	.5376
907	.6107	.4726	.3344	.1962	.0580	.9198	.7816	.6434	.5053	.3671	.0907	.8143	.5380
430910	33.6110	34.4728	35.3346	36.1964	37.0583	37.9201	38.7819	39.6437	40.5055	41.3674	43.0910	44.8146	46.5383
913	.6112	.4730	.3349	.1967	.0585	.9203	.7822	.6440	.5058	.3676	.0913	.8150	.5386
916	.6114	.4733	.3351	.1969	.0588	.9206	.7824	.6443	.5061	.3679	.0916	.8153	.5389
919	.6117	.4735	.3354	.1972	.0590	.9209	.7827	.6445	.5064	.3682	.0919	.8156	.5393
922	.6119	.4738	.3356	.1974	.0593	.9211	.7830	.6448	.5067	.3685	.0922	.8159	.5396
430925	33.6122	34.4740	35.3359	36.1977	37.0596	37.9214	38.7833	39.6451	40.5070	41.3688	43.0925	44.8162	46.5399
928	.6124	.4742	.3361	.1980	.0598	.9217	.7835	.6454	.5072	.3691	.0928	.8165	.5402
931	.6126	.4745	.3363	.1982	.0601	.9219	.7838	.6457	.5075	.3694	.0931	.8168	.5405
934	.6129	.4747	.3366	.1985	.0603	.9222	.7841	.6459	.5078	.3697	.0934	.8171	.5409
937	.6131	.4750	.3368	.1987	.0606	.9225	.7843	.6462	.5081	.3700	.0937	.8174	.5412
430940	33.6133	34.4752	35.3371	36.1990	37.0608	37.9227	38.7846	39.6465	40.5084	41.3702	43.0940	44.8178	46.5415
943	.6136	.4754	.3373	.1992	.0611	.9230	.7849	.6468	.5086	.3705	.0943	.8181	.5418
946	.6138	.4757	.3376	.1995	.0614	.9232	.7851	.6470	.5089	.3708	.0946	.8184	.5422
949	.6140	.4759	.3378	.1997	.0616	.9235	.7854	.6473	.5092	.3711	.0949	.8187	.5425
952	.6143	.4762	.3381	.2000	.0619	.9238	.7857	.6476	.5095	.3714	.0952	.8190	.5428
430955	33.6145	34.4764	35.3383	36.2002	37.0621	37.9240	38.7860	39.6479	40.5098	41.3717	43.0955	44.8193	46.5431
958	.6147	.4766	.3386	.2005	.0624	.9243	.7862	.6481	.5101	.3720	.0958	.8196	.5435
961	.6150	.4769	.3388	.2007	.0626	.9246	.7865	.6484	.5103	.3723	.0961	.8199	.5438
964	.6152	.4771	.3390	.2010	.0629	.9248	.7868	.6487	.5106	.3725	.0964	.8203	.5441
967	.6154	.4774	.3393	.2012	.0632	.9251	.7870	.6490	.5109	.3728	.0967	.8206	.5444
430970	33.6157	34.4776	35.3395	36.2015	37.0634	37.9254	38.7873	39.6492	40.5112	41.3731	43.0970	44.8209	46.5448
973	.6159	.4778	.3398	.2017	.0637	.9256	.7876	.6495	.5115	.3734	.0973	.8212	.5451
976	.6161	.4781	.3400	.2020	.0639	.9259	.7878	.6498	.5117	.3737	.0976	.8215	.5454
979	.6164	.4783	.3403	.2022	.0642	.9262	.7881	.6501	.5120	.3740	.0979	.8218	.5457
982	.6166	.4786	.3405	.2025	.0645	.9264	.7884	.6503	.5123	.3743	.0982	.8221	.5461
430985	33.6168	34.4788	35.3408	36.2027	37.0647	37.9267	38.7887	39.6506	40.5126	41.3746	43.0985	44.8224	46.5464
988	.6171	.4790	.3410	.2030	.0650	.9269	.7889	.6509	.5129	.3748	.0988	.8228	.5467
991	.6173	.4793	.3413	.2032	.0652	.9272	.7892	.6512	.5132	.3751	.0991	.8231	.5470
994	.6175	.4795	.3415	.2035	.0655	.9275	.7895	.6514	.5134	.3754	.0994	.8234	.5474
997	.6178	.4798	.3418	.2037	.0657	.9277	.7897	.6517	.5137	.3757	.0997	.8237	.5477
431000	33.6180	34.4800	35.3420	36.2040	37.0660	37.9280	38.7900	39.6520	40.5140	41.3760	43.1000	44.8240	46.5480

MEGACYCLES PER SECOND

H A R M O N I C S

BASIC FREQ.	52	54	56	58	60	62	64	66	68	70	72	74	76
431000	22.4120	23.2740	24.1360	24.9980	25.8600	26.7220	27.5840	28.4460	29.3080	30.1700	31.0320	31.8940	32.7560
003	.4122	.2742	.1362	.9982	.8602	.7222	.5842	.4462	.3082	.1702	.0322	.8942	.7562
006	.4123	.2743	.1363	.9983	.8604	.7224	.5844	.4464	.3084	.1704	.0324	.8944	.7565
009	.4125	.2745	.1365	.9985	.8605	.7226	.5846	.4466	.3086	.1706	.0326	.8947	.7567
012	.4126	.2746	.1367	.9987	.8607	.7227	.5848	.4468	.3088	.1708	.0329	.8949	.7569
431015	22.4128	23.2748	24.1368	24.9989	25.8609	26.7229	27.5850	28.4470	29.3090	30.1711	31.0331	31.8951	32.7571
018	.4129	.2750	.1370	.9990	.8611	.7231	.5852	.4472	.3092	.1713	.0333	.8953	.7574
021	.4131	.2751	.1372	.9992	.8613	.7233	.5853	.4474	.3094	.1715	.0335	.8956	.7576
024	.4132	.2753	.1373	.9994	.8614	.7235	.5855	.4476	.3096	.1717	.0337	.8958	.7578
027	.4134	.2755	.1375	.9996	.8616	.7237	.5857	.4478	.3098	.1719	.0339	.8960	.7581
431030	22.4136	23.2756	24.1377	24.9997	25.8618	26.7239	27.5859	28.4480	29.3100	30.1721	31.0342	31.8962	32.7583
033	.4137	.2758	.1378	.9999	.8620	.7240	.5861	.4482	.3102	.1723	.0344	.8964	.7585
036	.4139	.2759	.1380	25.0001	.8622	.7242	.5863	.4484	.3104	.1725	.0346	.8967	.7587
039	.4140	.2761	.1382	.0003	.8623	.7244	.5865	.4486	.3107	.1727	.0348	.8969	.7590
042	.4142	.2763	.1384	.0004	.8625	.7246	.5867	.4488	.3109	.1729	.0350	.8971	.7592
431045	22.4143	23.2764	24.1385	25.0006	25.8627	26.7248	27.5869	28.4490	29.3111	30.1732	31.0352	31.8973	32.7594
048	.4145	.2766	.1387	.0008	.8629	.7250	.5871	.4492	.3113	.1734	.0355	.8976	.7596
051	.4147	.2768	.1389	.0010	.8631	.7252	.5873	.4494	.3115	.1736	.0357	.8978	.7599
054	.4148	.2769	.1390	.0011	.8632	.7253	.5875	.4496	.3117	.1738	.0359	.8980	.7601
057	.4150	.2771	.1392	.0013	.8634	.7255	.5876	.4498	.3119	.1740	.0361	.8982	.7603
431060	22.4151	23.2772	24.1394	25.0015	25.8636	26.7257	27.5878	28.4500	29.3121	30.1742	31.0363	31.8984	32.7606
063	.4153	.2774	.1395	.0017	.8638	.7259	.5880	.4502	.3123	.1744	.0365	.8987	.7608
066	.4154	.2776	.1397	.0018	.8640	.7261	.5882	.4504	.3125	.1746	.0368	.8989	.7610
069	.4156	.2777	.1399	.0020	.8641	.7263	.5884	.4506	.3127	.1748	.0370	.8991	.7612
072	.4157	.2779	.1400	.0022	.8643	.7265	.5886	.4508	.3129	.1750	.0372	.8993	.7615
431075	22.4159	23.2781	24.1402	25.0024	25.8645	26.7267	27.5888	28.4510	29.3131	30.1753	31.0374	31.8996	32.7617
078	.4161	.2782	.1404	.0025	.8647	.7268	.5890	.4511	.3133	.1755	.0376	.8998	.7619
081	.4162	.2784	.1405	.0027	.8649	.7270	.5892	.4513	.3135	.1757	.0378	.9000	.7622
084	.4164	.2785	.1407	.0029	.8650	.7272	.5894	.4515	.3137	.1759	.0380	.9002	.7624
087	.4165	.2787	.1409	.0030	.8652	.7274	.5896	.4517	.3139	.1761	.0383	.9004	.7626
431090	22.4167	23.2789	24.1410	25.0032	25.8654	26.7276	27.5898	28.4519	29.3141	30.1763	31.0385	31.9007	32.7628
093	.4168	.2790	.1412	.0034	.8656	.7278	.5900	.4521	.3143	.1765	.0387	.9009	.7631
096	.4170	.2792	.1414	.0036	.8658	.7280	.5901	.4523	.3145	.1767	.0389	.9011	.7633
099	.4171	.2793	.1415	.0037	.8659	.7281	.5903	.4525	.3147	.1769	.0391	.9013	.7635
102	.4173	.2795	.1417	.0039	.8661	.7283	.5905	.4527	.3149	.1771	.0393	.9015	.7638
431105	22.4175	23.2797	24.1419	25.0041	25.8663	26.7285	27.5907	28.4529	29.3151	30.1774	31.0396	31.9018	32.7640
108	.4176	.2798	.1420	.0043	.8665	.7287	.5909	.4531	.3153	.1776	.0398	.9020	.7642
111	.4178	.2800	.1422	.0044	.8667	.7289	.5911	.4533	.3155	.1778	.0400	.9022	.7644
114	.4179	.2802	.1424	.0046	.8668	.7291	.5913	.4535	.3158	.1780	.0402	.9024	.7647
117	.4181	.2803	.1426	.0048	.8670	.7293	.5915	.4537	.3160	.1782	.0404	.9027	.7649
431120	22.4182	23.2805	24.1427	25.0050	25.8672	26.7294	27.5917	28.4539	29.3162	30.1784	31.0406	31.9029	32.7651
123	.4184	.2806	.1429	.0051	.8674	.7296	.5919	.4541	.3164	.1786	.0409	.9031	.7653
126	.4186	.2808	.1431	.0053	.8676	.7298	.5921	.4543	.3166	.1788	.0411	.9033	.7656
129	.4187	.2810	.1432	.0055	.8677	.7300	.5923	.4545	.3168	.1790	.0413	.9035	.7658
132	.4189	.2811	.1434	.0057	.8679	.7302	.5924	.4547	.3170	.1792	.0415	.9038	.7660
431135	22.4190	23.2813	24.1436	25.0058	25.8681	26.7304	27.5926	28.4549	29.3172	30.1795	31.0417	31.9040	32.7663
138	.4192	.2815	.1437	.0060	.8683	.7306	.5928	.4551	.3174	.1797	.0419	.9042	.7665
141	.4193	.2816	.1439	.0062	.8685	.7307	.5930	.4553	.3176	.1799	.0422	.9044	.7667
144	.4195	.2818	.1441	.0064	.8686	.7309	.5932	.4555	.3178	.1801	.0424	.9047	.7669
147	.4196	.2819	.1442	.0065	.8688	.7311	.5934	.4557	.3180	.1803	.0426	.9049	.7672
431150	22.4198	23.2821	24.1444	25.0067	25.8690	26.7313	27.5936	28.4559	29.3182	30.1805	31.0428	31.9051	32.7674
153	.4200	.2823	.1446	.0069	.8692	.7315	.5938	.4561	.3184	.1807	.0430	.9053	.7676
156	.4201	.2824	.1447	.0070	.8694	.7317	.5940	.4563	.3186	.1809	.0432	.9055	.7679
159	.4203	.2826	.1449	.0072	.8695	.7319	.5942	.4565	.3188	.1811	.0434	.9058	.7681
162	.4204	.2827	.1451	.0074	.8697	.7320	.5944	.4567	.3190	.1813	.0437	.9060	.7683
431165	22.4206	23.2829	24.1452	25.0076	25.8699	26.7322	27.5946	28.4569	29.3192	30.1816	31.0439	31.9062	32.7685
168	.4207	.2831	.1454	.0077	.8701	.7324	.5948	.4571	.3194	.1818	.0441	.9064	.7688
171	.4209	.2832	.1456	.0079	.8703	.7326	.5949	.4573	.3196	.1820	.0443	.9067	.7690
174	.4210	.2834	.1457	.0081	.8704	.7328	.5951	.4575	.3198	.1822	.0445	.9069	.7692
177	.4212	.2836	.1459	.0083	.8706	.7330	.5953	.4577	.3200	.1824	.0447	.9071	.7695
431180	22.4214	23.2837	24.1461	25.0084	25.8708	26.7332	27.5955	28.4579	29.3202	30.1826	31.0450	31.9073	32.7697
183	.4215	.2839	.1462	.0086	.8710	.7333	.5957	.4581	.3204	.1828	.0452	.9075	.7699
186	.4217	.2840	.1464	.0088	.8712	.7335	.5959	.4583	.3206	.1830	.0454	.9078	.7701
189	.4218	.2842	.1466	.0090	.8713	.7337	.5961	.4585	.3209	.1832	.0456	.9080	.7704
192	.4220	.2844	.1468	.0091	.8715	.7339	.5963	.4587	.3211	.1834	.0458	.9082	.7706
431195	22.4221	23.2845	24.1469	25.0093	25.8717	26.7341	27.5965	28.4589	29.3213	30.1837	31.0460	31.9084	32.7708
198	.4223	.2847	.1471	.0095	.8719	.7343	.5967	.4591	.3215	.1839	.0463	.9087	.7710
201	.4225	.2849	.1473	.0097	.8721	.7345	.5969	.4593	.3217	.1841	.0465	.9089	.7713
204	.4226	.2850	.1474	.0098	.8722	.7346	.5971	.4595	.3219	.1843	.0467	.9091	.7715
207	.4228	.2852	.1476	.0100	.8724	.7348	.5972	.4597	.3221	.1845	.0469	.9093	.7717
431210	22.4229	23.2853	24.1478	25.0102	25.8726	26.7350	27.5974	28.4599	29.3223	30.1847	31.0471	31.9095	32.7720
213	.4231	.2855	.1479	.0104	.8728	.7352	.5976	.4601	.3225	.1849	.0473	.9098	7722
216	.4232	.2857	.1481	.0105	.8730	.7354	.5978	.4603	.3227	.1851	.0476	.9100	7724
219	.4234	.2858	.1483	.0107	.8731	.7356	.5980	.4605	.3229	.1853	.0478	.9102	7726
222	.4235	.2860	.1484	.0109	.8733	.7358	.5982	.4607	.3231	.1855	.0480	.9104	.7729
431225	22.4237	23.2862	24.1486	25.0111	25.8735	26.7360	27.5984	28.4609	29.3233	30.1858	31.0482	31.9107	32.7731
228	.4239	.2863	.1488	.0112	.8737	.7361	.5986	.4610	.3235	.1860	.0484	.9109	.7733
231	.4240	.2865	.1489	.0114	.8739	.7363	.5988	.4612	.3237	.1862	.0486	.9111	.7736
234	.4242	.2866	.1491	.0116	.8740	.7365	.5990	.4614	.3239	.1864	.0488	.9113	.7738
237	.4243	.2868	.1493	.0117	.8742	.7367	.5992	.4616	.3241	.1866	.0491	.9115	.7740
431240	22.4245	23.2870	24.1494	25.0119	25.8744	26.7369	27.5994	28.4618	29.3243	30.1868	31.0493	31.9118	32.7742
243	.4246	.2871	.1496	.0121	.8746	.7371	.5996	.4620	.3245	.1870	.0495	.9120	.7745
246	.4248	.2873	.1498	.0123	.8748	.7373	.5997	.4622	.3247	.1872	.0497	.9122	.7747
249	.4249	.2874	.1499	.0124	.8749	.7374	.5999	.4624	.3249	.1874	.0499	.9124	.7749
252	.4251	.2876	.1501	.0126	.8751	.7376	.6001	.4626	.3251	.1876	.0501	.9126	.7752
431255	22.4253	23.2878	24.1503	25.0128	25.8753	26.7378	27.6003	28.4628	29.3253	30.1879	31.0504	31.9129	32.7754
258	.4254	.2879	.1504	.0130	.8755	.7380	.6005	.4630	.3255	.1881	.0506	.9131	.7756
261	.4256	.2881	.1506	.0131	.8757	.7382	.6007	.4632	.3257	.1883	.0508	.9133	.7758
264	.4257	.2883	.1508	.0133	.8758	.7384	.6009	.4634	.3260	.1885	.0510	.9135	.7761
267	.4259	.2884	.1510	.0135	.8760	.7386	.6011	.4636	.3262	.1887	.0512	.9138	.7763
431270	22.4260	23.2886	24.1511	25.0137	25.8762	26.7387	27.6013	28.4638	29.3264	30.1889	31.0514	31.9140	32.7765
273	.4262	.2887	.1513	.0138	.8764	.7389	.6015	.4640	.3266	.1891	.0517	.9142	.7767
276	.4264	.2889	.1515	.0140	.8766	.7391	.6017	.4642	.3268	.1893	.0519	.9144	.7770
279	.4265	.2891	.1516	.0142	.8767	.7393	.6019	.4644	.3270	.1895	.0521	.9146	.7772
282	.4267	.2892	.1518	.0144	.8769	.7395	.6020	.4646	.3272	.1897	.0523	.9149	.7774
431285	22.4268	23.2894	24.1520	25.0145	25.8771	26.7397	27.6022	28.4648	29.3274	30.1900	31.0525	31.9151	32.7777
288	.4270	.2896	.1521	.0147	.8773	.7399	.6024	.4650	.3276	.1902	.0527	.9153	.7779
291	.4271	.2897	.1523	.0149	.8775	.7400	.6026	.4652	.3278	.1904	.0530	.9155	.7781
294	.4273	.2899	.1525	.0151	.8776	.7402	.6028	.4654	.3280	.1906	.0532	.9158	.7783
297	.4274	.2900	.1526	.0152	.8778	.7404	.6030	.4656	.3282	.1908	.0534	.9160	.7786
431300	22.4276	23.2902	24.1528	25.0154	25.8780	26.7406	27.6032	28.4658	29.3284	30.1910	31.0536	31.9162	32.7788

MEGACYCLES PER SECOND

HARMONICS

BASIC FREQ.	78	80	82	84	86	88	90	92	94	96	100	104	108
431000	33.6180	34.4800	35.3420	36.2040	37.0660	37.9280	38.7900	39.6520	40.5140	41.3760	43.1000	44.8240	46.5480
003	.6182	.4802	.3422	.2043	.0663	.9283	.7903	.6523	.5143	.3763	.1003	.8243	.5483
006	.6185	.4805	.3425	.2045	.0665	.9285	.7905	.6526	.5146	.3766	.1006	.8246	.5486
009	.6187	.4807	.3427	.2048	.0668	.9288	.7908	.6528	.5148	.3769	.1009	.8249	.5490
012	.6189	.4810	.3430	.2050	.0670	.9291	.7911	.6531	.5151	.3772	.1012	.8252	.5493
431015	33.6192	34.4812	35.3432	36.2053	37.0673	37.9293	38.7914	39.6534	40.5154	41.3774	43.1015	44.8256	46.5496
018	.6194	.4814	.3435	.2055	.0675	.9296	.7916	.6537	.5157	.3777	.1018	.8259	.5499
021	.6196	.4817	.3437	.2058	.0678	.9298	.7919	.6539	.5160	.3780	.1021	.8262	.5503
024	.6199	.4819	.3440	.2060	.0681	.9301	.7922	.6542	.5163	.3783	.1024	.8265	.5506
027	.6201	.4822	.3442	.2063	.0683	.9304	.7924	.6545	.5165	.3786	.1027	.8268	.5509
431030	33.6203	34.4824	35.3445	36.2065	37.0686	37.9306	38.7927	39.6548	40.5168	41.3789	43.1030	44.8271	46.5512
033	.6206	.4826	.3447	.2068	.0688	.9309	.7930	.6550	.5171	.3792	.1033	.8274	.5516
036	.6208	.4829	.3450	.2070	.0691	.9312	.7932	.6553	.5174	.3795	.1036	.8277	.5519
039	.6210	.4831	.3452	.2073	.0694	.9314	.7935	.6556	.5177	.3797	.1039	.8281	.5522
042	.6213	.4834	.3454	.2075	.0696	.9317	.7938	.6559	.5179	.3800	.1042	.8284	.5525
431045	33.6215	34.4836	35.3457	36.2078	37.0699	37.9320	38.7941	39.6561	40.5182	41.3803	43.1045	44.8287	46.5529
048	.6217	.4838	.3459	.2080	.0701	.9322	.7943	.6564	.5185	.3806	.1048	.8290	.5532
051	.6220	.4841	.3462	.2083	.0704	.9325	.7946	.6567	.5188	.3809	.1051	.8293	.5535
054	.6222	.4843	.3464	.2085	.0706	.9328	.7949	.6570	.5191	.3812	.1054	.8296	.5538
057	.6224	.4846	.3467	.2088	.0709	.9330	.7951	.6572	.5194	.3815	.1057	.8299	.5542
431060	33.6227	34.4848	35.3469	36.2090	37.0712	37.9333	38.7954	39.6575	40.5196	41.3818	43.1060	44.8302	46.5545
063	.6229	.4850	.3472	.2093	.0714	.9335	.7957	.6578	.5199	.3820	.1063	.8306	.5548
066	.6231	.4853	.3474	.2095	.0717	.9338	.7959	.6581	.5202	.3823	.1066	.8309	.5551
069	.6234	.4855	.3477	.2098	.0719	.9341	.7962	.6583	.5205	.3826	.1069	.8312	.5555
072	.6236	.4858	.3589	.2100	.0722	.9343	7965	.6586	.5208	.3829	.1072	.8315	.5558
431075	33.6239	34.4860	35.3482	36.2103	37.0725	37.9346	38.7968	39.6589	40.5211	41.2832	43.1075	44.8318	46.5561
078	.6241	.4862	.3484	.2106	.0727	.9349	.7970	.6592	.5213	.3835	.1078	.8321	.5564
081	.6243	.4865	.3486	.2108	.0730	.9351	.7973	.6595	.5216	.3838	.1081	.8324	.5567
084	.6246	.4867	.3489	.2111	.0732	.9354	.7976	.6597	.5219	.3841	.1084	.8327	.5571
087	.6248	.4870	.3491	.2113	.0735	.9357	.7978	.6600	.5222	.3844	.1087	.8330	.5574
431090	33.6250	34.4872	35.3494	36.2116	37.0737	37.9359	38.7981	39.6603	40.5225	41.3846	43.1090	44.8334	46.5577
093	.6253	.4874	.3496	.2118	.0740	.9362	.7984	.6606	.5227	.3849	.1093	.8337	.5580
096	.6255	.4877	.3499	.2121	.0743	.9364	.7986	.6608	.5230	.3852	.1096	.8340	.5584
099	.6257	.4879	.3501	.2123	.0745	.9367	.7989	.6611	.5233	.3855	.1099	.8343	.5587
102	.6260	.4882	.3504	.2126	.0748	.9370	.7992	.6614	.5236	.3858	.1102	.8346	.5590
431105	33.6262	34.4884	35.3506	36.2128	37.0750	37.9372	38.7995	39.6617	40.5239	41.3861	43.1105	44.8349	46.5593
108	.6264	.4886	.3509	.2131	.0753	.9375	.7997	.6619	.5242	.3864	.108	.8352	.5597
111	.6267	.4889	.3511	.2133	.0755	.9378	.8000	.6622	.5244	.3867	.1111	.8355	.5600
114	.6269	.4891	.3513	.2136	.0758	.9380	.8003	.6625	.5247	.3869	.1114	.8359	.5603
117	.6271	.4894	.3516	.2138	.0761	.9383	.8005	.6628	.5250	.3872	.1117	.8362	.5606
431120	33.6274	34.4896	35.3518	36.2141	37.0763	37.9386	38.8008	39.6630	40.5253	41.3875	43.1120	44.8365	46.5610
123	.6276	.4898	.3521	.2143	.0766	.9388	.8011	.6633	.5256	.3878	.1123	.8368	.5613
126	.6278	.4901	.3523	.2146	.0768	.9391	.8013	.6636	.5258	.3881	.1126	.8371	.5616
129	.6281	.4903	.3526	.2148	.0771	.9394	.8016	.6639	.5261	.3884	.1129	.8374	.5619
132	.6283	.4906	.3528	.2151	.0774	.9396	.8019	.6641	.5264	.3887	.1132	.8377	.5623
431135	33.6285	34.4908	35.3531	36.2153	37.0776	37.9399	38.8022	39.6644	40.5267	41.3890	43.1135	44.8380	46.5626
138	.6288	.4910	.3533	.2156	.0779	.9401	.8024	.6647	.5270	.3892	.1138	.8384	.5629
141	.6290	.4913	.3536	.2158	.0781	.9404	.8027	.6650	.5273	.3895	.1141	.8387	.5632
144	.6292	.4915	.3538	.2161	.0784	.9407	.8030	.6652	.5275	.3898	.1144	.8390	.5636
147	.6295	.4918	.3541	.2163	.0786	.9409	.8032	.6655	.5278	.3901	.1147	.8393	.5639
431150	33.6297	34.4920	35.3543	36.2166	37.0789	37.9412	38.8035	39.6658	40.5281	41.3904	43.1150	44.8396	46.5642
153	.6299	.4922	.3545	.2169	.0792	.9415	.8038	.6661	.5284	.3907	.1153	.8399	.5645
156	.6302	.4925	.3548	.2171	.0794	.9417	.8040	.6664	.5287	.3910	.1156	.8402	.5648
159	.6304	.4927	.3550	.2174	.0797	.9420	.8043	.6666	.5289	.3913	.1159	.8405	.5652
162	.6306	.4930	.3553	.2176	.0799	.9423	.8046	.6669	.5292	.3916	.1162	.8408	.5655
431165	33.6309	34.4932	35.3555	36.2179	37.0802	37.9425	38.8049	39.6672	40.5295	41.3918	43.1165	44.8412	46.5658
168	.6311	.4934	.3558	.2181	.0804	.9428	.8051	.6675	.5298	.3921	.1168	.8415	.5661
171	.6313	.4937	.3560	.2184	.0807	.9430	.8054	.6677	.5301	.3924	.1171	.8418	.5665
174	.6316	.4939	.3563	.2186	.0810	.9433	.8057	.6680	.5304	.3927	.1174	.8421	.5668
177	.6318	.4942	.3565	.2189	.0812	.9436	.8059	.6683	.5306	.3930	.1177	.8424	.5671
431180	33.6320	34.4944	35.3568	36.2191	37.0815	37.9438	38.8062	39.6686	40.5309	41.3933	43.1180	44.8427	46.5674
183	.6323	.4946	.3570	.2194	.0817	.9441	.8065	.6688	.5312	.3936	.1183	.8430	.5678
186	.6325	.4949	.3573	.2196	.0820	.9444	.8067	.6691	.5315	.3939	.1186	.8433	.5681
189	.6327	.4951	.3575	.2199	.0823	.9446	.8070	.6694	.5318	.3941	.1189	.8437	.5684
192	.6330	.4954	.3577	.2201	.0825	.9449	.8073	.6697	.5320	.3944	.1192	.8440	.5687
431195	33.6332	34.4956	35.3580	36.2204	37.0828	37.9452	38.8076	39.6699	40.5323	41.3947	43.1195	44.8443	46.5691
198	.6334	.4958	.3582	.2206	.0830	.9454	.8078	.6702	.5326	.3950	.1198	.8446	.5694
201	.6337	.4961	.3585	.2209	.0833	.9457	.8081	.6705	.5329	.3953	.1201	.8449	.5697
204	.6339	.4963	.3587	.2211	.0835	.9460	.8084	.6708	.5332	.3956	.1204	.8452	.5700
207	.6341	.4966	.3590	.2214	.0838	.9462	.8086	.6710	.5335	.3959	.1207	.8455	.5704
431210	33.6344	34.4968	35.3592	36.2216	37.0841	37.9465	38.8089	39.6713	40.5337	41.3962	43.1210	44.8458	46.5707
213	.6346	.4970	.3595	.2219	.0843	.9467	.8092	.6716	.5340	.3964	.1213	.8462	.5710
216	.6348	.4973	.3597	.2221	.0846	.9470	.8094	.6719	.5343	.3967	.1216	.8465	.5713
219	.6351	.4975	.3600	.2224	.0848	.9473	.8097	.6721	.5346	.3970	.1219	.8468	.5717
222	.6353	.4978	.3602	.2226	.0851	.9475	.8100	.6724	.5349	.3973	.1222	.8471	.5720
431225	33.6356	34.4980	35.3605	36.2229	37.0854	37.9478	38.8103	39.6727	40.5352	41.3976	43.1225	44.8474	46.5723
228	.6358	.4982	.3607	.2232	.0856	.9481	.8105	.6730	.5354	.3979	.1228	.8477	.5726
231	.6360	.4985	.3609	.2234	.0859	.9483	.8108	.6733	.5357	.3982	.1231	.8480	.5729
234	.6363	.4987	.3612	.2237	.0861	.9486	.8111	.6735	.5360	.3985	.1234	.8483	.5733
237	.6365	.4990	.3614	.2239	.0864	.9489	.8113	.6738	.5363	.3988	.1237	.8486	.5736
431240	33.6367	34.4992	35.3617	36.2242	37.0866	37.9491	38.8116	39.6741	40.5366	41.3990	43.1240	44.8490	46.5739
243	.6370	.4994	.3619	.2244	.0869	.9494	.8119	.6744	.5368	.3993	.1243	.8493	.5742
246	.6372	.4997	.3622	.2247	.0872	.9496	.8121	.6746	.5371	.3996	.1246	.8496	.5746
249	.6374	.4999	.3624	.2249	.0874	.9499	.8124	.6749	.5374	.3999	.1249	.8499	.5749
252	.6377	.5002	.3627	.2252	.0877	.9502	.8127	.6752	.5377	.4002	.1252	.8502	.5752
431255	33.6379	34.5004	35.3629	36.2254	37.0879	37.9504	38.8130	39.6755	40.5380	41.4005	43.1255	44.8505	46.5755
258	.6381	.5006	.3632	.2257	.0882	.9507	.8132	.6757	.5383	.4008	.1258	.8508	.5759
261	.6384	.5009	.3634	.2259	.0884	.9510	.8135	.6760	.5385	.4011	.1261	.8511	.5762
264	.6386	.5011	.3636	.2262	.0887	.9512	.8138	.6763	.5388	.4013	.1264	.8515	.5765
267	.6388	.5014	.3639	.2264	.0890	.9515	.8140	.6766	.5391	.4016	.1267	.8518	.5768
431270	33.6391	34.5016	35.3641	36.2267	37.0892	37.9518	38.8143	39.6768	40.5394	41.4019	43.1270	44.8521	46.5772
273	.6393	.5018	.3644	.2269	.0895	.9520	.8146	.6771	.5397	.4022	.1273	.8524	.5775
276	.6395	.5021	.3646	.2272	.0897	.9523	.8148	.6774	.5399	.4025	.1276	.8527	.5778
279	.6398	.5023	.3649	.2274	.0900	.9526	.8151	.6777	.5402	.4028	.1279	.8530	.5781
282	.6400	.5026	.3651	.2277	.0903	.9528	.8154	.6779	.5405	.4031	.1282	.8533	.5785
431285	33.6402	34.5028	35.3654	36.2279	37.0905	37.9531	38.8157	39.6782	40.5408	41.4034	43.1285	44.8536	46.5788
288	.6405	.5030	.3656	.2282	.0908	.9533	.8159	.6785	.5411	.4036	.1288	.8540	.5791
291	.6407	.5033	.3659	.2284	.0910	.9536	.8162	.6788	.5414	.4039	.1291	.8543	.5794
294	.6409	.5035	.3661	.2287	.0913	.9539	.8165	.6790	.5416	.4042	.1294	.8546	.5798
297	.6412	.5038	.3664	.2289	.0915	.9541	.8167	.6793	.5419	.4045	.1297	.8549	.5801
431300	33.6414	34.5040	35.3666	36.2292	37.0918	37.9544	38.8170	39.6796	40.5422	41.4048	43.1300	44.8552	46.5804

H A R M O N I C S

BASIC FREQ.	52	54	56	58	60	62	64	66	68	70	72	74	76
431300	22.4276	23.2902	24.1528	25.0154	25.8780	26.7406	27.6032	28.4658	29.3284	30.1910	31.0536	31.9162	32.7788
303	.4278	.2904	.1530	.0156	.8782	.7408	.6034	.4660	.3286	.1912	.0538	.9164	.7790
306	.4279	.2905	.1531	.0157	.8784	.7410	.6036	.4662	.3288	.1914	.0540	.9166	.7793
309	.4281	.2907	.1533	.0159	.8785	.7412	.6038	.4664	.3290	.1916	.0542	.9169	.7795
312	.4282	.2908	.1535	.0161	.8787	.7413	.6040	.4666	.3292	.1918	.0545	.9171	.7797
431315	22.4284	23.2910	24.1536	25.0163	25.8789	26.7415	27.6042	28.4668	29.3294	30.1921	31.0547	31.9173	32.7799
318	.4285	.2912	.1538	.0164	.8791	.7417	.6044	.4670	.3296	.1923	.0549	.9175	.7802
321	.4287	.2913	.1540	.0166	.8793	.7419	.6045	.4672	.3298	.1925	.0551	.9178	.7804
324	.4288	.2915	.1541	.0168	.8794	.7421	.6047	.4674	.3300	.1927	.0553	.9180	.7806
327	.4290	.2917	.1543	.0170	.8796	.7423	.6049	.4676	.3302	.1929	.0555	.9182	.7809
431330	22.4292	23.2918	24.1545	25.0171	25.8798	26.7425	27.6051	28.4678	29.3304	30.1931	31.0558	31.9184	32.7811
333	.4293	.2920	.1546	.0173	.8800	.7426	.6053	.4680	.3306	.1933	.0560	.9186	.7813
336	.4295	.2921	.1548	.0175	.8802	.7428	.6055	.4682	.3308	.1935	.0562	.9189	.7815
339	.4296	.2923	.1550	.0177	.8803	.7430	.6057	.4684	.3311	.1937	.0564	.9191	.7818
342	.4298	.2925	.1552	.0178	.8805	.7432	.6059	.4686	.3313	.1939	.0566	.9193	.7820
431345	22.4299	23.2926	24.1553	25.0180	25.8807	26.7434	27.6061	28.4688	29.3315	30.1942	31.0568	31.9195	32.7822
348	.4301	.2928	.1555	.0182	.8809	.7436	.6063	.4690	.3317	.1944	.0571	.9198	.7824
351	.4303	.2930	.1557	.0184	.8811	.7438	.6065	.4692	.3319	.1946	.0573	.9200	.7827
354	.4304	.2931	.1558	.0185	.8812	.7439	.6067	.4694	.3321	.1948	.0575	.9202	.7829
357	.4306	.2933	.1560	.0187	.8814	.7441	.6068	.4696	.3323	.1950	.0577	.9204	.7831
431360	22.4307	23.2934	24.1562	25.0189	25.8816	26.7443	27.6070	28.4698	29.3325	30.1952	31.0579	31.9206	32.7834
363	.4309	.2936	.1563	.0191	.8818	.7445	.6072	.4700	.3327	.1954	.0581	.9209	.7836
366	.4310	.2938	.1565	.0192	.8820	.7447	.6074	.4702	.3329	.1956	.0584	.9211	.7838
369	.4312	.2939	.1567	.0194	.8821	.7449	.6076	.4704	.3331	.1958	.0586	.9213	.7840
372	.4313	.2941	.1568	.0196	.8823	.7451	.6078	.4706	.3333	.1960	.0588	.9215	.7843
431375	22.4315	23.2943	24.1570	25.0198	25.8825	26.7453	27.6080	28.4708	29.3335	30.1963	31.0590	31.9218	32.7845
378	.4317	.2944	.1572	.0199	.8827	.7454	.6082	.4709	.3337	.1965	.0592	.9220	.7847
381	.4318	.2946	.1573	.0201	.8829	.7456	.6084	.4711	.3339	.1967	.0594	.9222	.7850
384	.4320	.2947	.1575	.0203	.8830	.7458	.6086	.4713	.3341	.1969	.0596	.9224	.7852
387	.4321	.2949	.1577	.0204	.8832	.7460	.6088	.4715	.3343	.1971	.0599	.9226	.7854
431390	22.4323	23.2951	24.1578	25.0206	25.8834	26.7462	27.6090	28.4717	29.3345	30.1973	31.0601	31.9229	32.7856
393	.4324	.2952	.1580	.0208	.8836	.7464	.6092	.4719	.3347	.1975	.0603	.9231	.7859
396	.4326	.2954	.1582	.0210	.8838	.7466	.6093	.4721	.3349	.1977	.0605	.9233	.7861
399	.4327	.2955	.1583	.0211	.8839	.7467	.6095	.4723	.3351	.1979	.0607	.9235	.7863
402	.4329	.2957	.1585	.0213	.8841	.7469	.6097	.4725	.3353	.1981	.0609	.9237	.7866
431405	22.4331	23.2959	24.1587	25.0215	25.8843	26.7471	27.6099	28.4727	29.3355	30.1984	31.0612	31.9240	32.7868
408	.4332	.2960	.1588	.0217	.8845	.7473	.6101	.4729	.3357	.1986	.0614	.9242	.7870
411	.4334	.2962	.1590	.0218	.8847	.7475	.6103	.4731	.3359	.1988	.0616	.9244	.7872
414	.4335	.2964	.1592	.0220	.8848	.7477	.6105	.4733	.3362	.1990	.0618	.9246	.7875
417	.4337	.2965	.1594	.0222	.8850	.7479	.6107	.4735	.3364	.1992	.0620	.9249	.7877
431420	22.4338	23.2967	24.1595	25.0224	25.8852	26.7480	27.6109	28.4737	29.3366	30.1994	31.0622	31.9251	32.7879
423	.4340	.2968	.1597	.0225	.8854	.7482	.6111	.4739	.3368	.1996	.0625	.9253	.7881
426	.4342	.2970	.1599	.0227	.8856	.7484	.6113	.4741	.3370	.1998	.0627	.9255	.7884
429	.4343	.2972	.1600	.0229	.8857	.7486	.6115	.4743	.3372	.2000	.0629	.9257	.7886
432	.4345	.2973	.1602	.0231	.8859	.7488	.6116	.4745	.3374	.2002	.0631	.9260	.7888
431435	22.4346	23.2975	24.1604	25.0232	25.8861	26.7490	27.6118	28.4747	29.3376	30.2005	31.0633	31.9262	32.7891
438	.4348	.2977	.1605	.0234	.8863	.7492	.6120	.4749	.3378	.2007	.0635	.9264	.7893
441	.4349	.2978	.1607	.0236	.8865	.7493	.6122	.4751	.3380	.2009	.0638	.9266	.7895
444	.4351	.2980	.1609	.0238	.8866	.7495	.6124	.4753	.3382	.2011	.0640	.9269	.7897
447	.4352	.2981	.1610	.0239	.8868	.7497	.6126	.4755	.3384	.2013	.0642	.9271	.7900
431450	22.4354	23.2983	24.1612	25.0241	25.8870	26.7499	27.6128	28.4757	29.3386	30.2015	31.0644	31.9273	32.7902
453	.4356	.2985	.1614	.0243	.8872	.7501	.6130	.4759	.3388	.2017	.0646	.9275	.7904
456	.4357	.2986	.1615	.0244	.8874	.7503	.6132	.4761	.3390	.2019	.0648	.9277	.7907
459	.4359	.2988	.1617	.0246	.8875	.7505	.6134	.4763	.3392	.2021	.0650	.9280	.7909
462	.4360	.2989	.1619	.0248	.8877	.7506	.6136	.4765	.3394	.2023	.0653	.9282	.7911
431465	22.4362	23.2991	24.1620	25.0250	25.8879	26.7508	27.6138	28.4767	29.3396	30.2026	31.0655	31.9284	32.7913
468	.4363	.2993	.1622	.0251	.8881	.7510	.6140	.4769	.3398	.2028	.0657	.9286	.7916
471	.4365	.2994	.1624	.0253	.8883	.7512	.6141	.4771	.3400	.2030	.0659	.9289	.7918
474	.4366	.2996	.1625	.0255	.8884	.7514	.6143	.4773	.3402	.2032	.0661	.9291	.7920
477	.4368	.2998	.1627	.0257	.8886	.7516	.6145	.4775	.3404	.2034	.0663	.9293	.7923
431480	22.4370	23.2999	24.1629	25.0258	25.8888	26.7518	27.6147	28.4777	29.3406	30.2036	31.0666	31.9295	32.7925
483	.4371	.3001	.1630	.0260	.8890	.7519	.6149	.4779	.3408	.2038	.0668	.9297	.7927
486	.4373	.3002	.1632	.0262	.8892	.7521	.6151	.4781	.3410	.2040	.0670	.9300	.7929
489	.4374	.3004	.1634	.0264	.8893	.7523	.6153	.4783	.3413	.2042	.0672	.9302	.7932
492	.4376	.3006	.1636	.0265	.8895	.7525	.6155	.4785	.3415	.2044	.0674	.9304	.7934
431495	22.4377	23.3007	24.1637	25.0267	25.8897	26.7527	27.6157	28.4787	29.3417	30.2047	31.0676	31.9306	32.7936
498	.4379	.3009	.1639	.0269	.8899	.7529	.6159	.4789	.3419	.2049	.0679	.9309	.7938
501	.4381	.3011	.1641	.0271	.8901	.7531	.6161	.4791	.3421	.2051	.0681	.9311	.7941
504	.4382	.3012	.1642	.0272	.8902	.7532	.6163	.4793	.3423	.2053	.0683	.9313	.7943
507	.4384	.3014	.1644	.0274	.8904	.7534	.6164	.4795	.3425	.2055	.0685	.9315	.7945
431510	22.4385	23.3015	24.1646	25.0276	25.8906	26.7536	27.6166	28.4797	29.3427	30.2057	31.0687	31.9317	32.7948
513	.4387	.3017	.1647	.0278	.8908	.7538	.6168	.4799	.3429	.2059	.0689	.9320	.7950
516	.4388	.3019	.1649	.0279	.8910	.7540	.6170	.4801	.3431	.2061	.0692	.9322	.7952
519	.4390	.3020	.1651	.0281	.8911	.7542	.6172	.4803	.3433	.2063	.0694	.9324	.7954
522	.4391	.3022	.1652	.0283	.8913	.7544	.6174	.4805	.3435	.2065	.0696	.9326	.7957
431525	22.4393	23.3024	24.1654	25.0285	25.8915	26.7546	27.6176	28.4807	29.3437	30.2068	31.0698	31.9329	32.7959
528	.4395	.3025	.1656	.0286	.8917	.7547	.6178	.4808	.3439	.2070	.0700	.9331	.7961
531	.4396	.3027	.1657	.0288	.8919	.7549	.6180	.4810	.3441	.2072	.0702	.9333	.7965
534	.4398	.3028	.1659	.0290	.8920	.7551	.6182	.4812	.3443	.2074	.0704	.9335	.7966
537	.4399	.3030	.1661	.0291	.8922	.7553	.6184	.4814	.3445	.2076	.0707	.9337	.7968
431540	22.4401	23.3032	24.1662	25.0293	25.8924	26.7555	27.6186	28.4816	29.3447	30.2078	31.0709	31.9340	32.7970
543	.4402	.3033	.1664	.0295	.8926	.7557	.6188	.4818	.3449	.2080	.0711	.9342	.7973
546	.4404	.3035	.1666	.0297	.8928	.7559	.6189	.4820	.3451	.2082	.0713	.9344	.7975
549	.4405	.3036	.1667	.0298	.8929	.7560	.6191	.4822	.3453	.2084	.0715	.9346	.7977
552	.4407	.3038	.1669	.0300	.8931	.7562	.6193	.4824	.3455	.2086	.0717	.9348	.7980
431555	22.4409	23.3040	24.1671	25.0302	25.8933	26.7564	27.6195	28.4826	29.3457	30.2089	31.0720	31.9351	32.7982
558	.4410	.3041	.1672	.0304	.8935	.7566	.6197	.4828	.3459	.2091	.0722	.9353	.7984
561	.4412	.3043	.1674	.0305	.8937	.7568	.6199	.4830	.3461	.2093	.0724	.9355	.7986
564	.4413	.3045	.1676	.0307	.8938	.7570	.6201	.4832	.3464	.2095	.0726	.9357	.7989
567	.4415	.3046	.1678	.0309	.8940	.7572	.6203	.4834	.3466	.2097	.0728	.9360	.7991
431570	22.4416	23.3048	24.1679	25.0311	25.8942	26.7573	27.6205	28.4836	29.3468	30.2099	31.0730	31.9362	32.7993
573	.4418	.3049	.1681	.0312	.8944	.7575	.6207	.4838	.3470	.2101	.0733	.9264	.7995
576	.4420	.3051	.1683	.0314	.8946	.7577	.6209	.4840	.3472	.2103	.0735	.9366	.7998
579	.4421	.3053	.1684	.0316	.8947	.7579	.6211	.4842	.3474	.2105	.0737	.9368	.8000
582	.4423	.3054	.1686	.0318	.8949	.7581	.6212	.4844	.3476	.2107	.0739	.9371	.8002
431585	22.4424	23.3056	24.1688	25.0319	25.8951	26.7583	27.6214	28.4846	29.3478	30.2110	31.0741	31.9373	32.8005
588	.4426	.3058	.1689	.0321	.8953	.7585	.6216	.4848	.3480	.2112	.0743	.9375	.8007
591	.4427	.3059	.1691	.0323	.8955	.7586	.6218	.4850	.3482	.2114	.0746	.9377	.8009
594	.4429	.3061	.1693	.0325	.8956	.7588	.6220	.4852	.3484	.2116	.0748	.9380	.8011
597	.4430	.3062	.1694	.0326	.8958	.7590	.6222	.4854	.3486	.2118	.0750	.9382	.8014
431600	22.4432	23.3064	24.1696	25.0328	25.8960	26.7592	27.6224	28.4856	29.3488	30.2120	31.0752	31.9384	32.8016

MEGACYCLES PER SECOND

HARMONICS

BASIC FREQ.	78	80	82	84	86	88	90	92	94	96	100	104	108
431300	33.6414	34.5040	35.3666	36.2292	37.0918	37.9544	38.8170	39.6796	40.5422	41.4048	43.1300	44.8552	46.5804
303	.6416	.5042	.3668	.2295	.0921	.9547	.8173	.6799	.5425	.4051	.1303	.8555	.5807
306	.6419	.5045	.3671	.2297	.0923	.9549	.8175	.6802	.5428	.4054	.1306	.8558	.5810
309	.6421	.5047	.3673	.2300	.0926	.9552	.8178	.6804	.5430	.4057	.1309	.8561	.5814
312	.6423	.5050	.3676	.2302	.0928	.9555	.8181	.6807	.5433	.4060	.1312	.8564	.5817
431315	33.6426	34.5052	35.3678	36.2305	37.0931	37.9557	38.8184	39.6810	40.5436	41.4062	43.1315	44.8568	46.5820
318	.6428	.5054	.3681	.2307	.0933	.9560	.8186	.6813	.5439	.4065	.1318	.8571	.5823
321	.6430	.5057	.3683	.2310	.0936	.9562	.8189	.6815	.5442	.4068	.1321	.8574	.5827
324	.6433	.5059	.3686	.2312	.0939	.9565	.8192	.6818	.5445	.4071	.1324	.8577	.5830
327	.6435	.5062	.3688	.2315	.0941	.9568	.8194	.6821	.5447	.4074	.1327	.8580	.5833
431330	33.6437	34.5064	35.3691	36.2317	37.0944	37.9570	38.8197	39.6824	40.5450	41.4077	43.1330	44.8583	46.5836
333	.6440	.5066	.3693	.2320	.0946	.9573	.8200	.6826	.5453	.4080	.1333	.8586	.5840
336	.6442	.5069	.3696	.2322	.0949	.9576	.8202	.6829	.5456	.4083	.1336	.8589	.5843
339	.6444	.5071	.3698	.2325	.0952	.9578	.8205	.6832	.5459	.4085	.1339	.8593	.5846
342	.6447	.5074	.3700	.2327	.0954	.9581	.8208	.6835	.5461	.4088	.1342	.8596	.5849
431345	33.6449	34.5076	35.3703	36.2330	37.0957	37.9584	38.8211	39.6837	40.5464	41.4091	43.1345	44.8599	46.5853
348	.6451	.5078	.3705	.2332	.0959	.9586	.8213	.6840	.5467	.4094	.1348	.8602	.5856
351	.6454	.5081	.3708	.2335	.0962	.9589	.8216	.6843	.5470	.4097	.1351	.8605	.5859
354	.6456	.5083	.3710	.2337	.0964	.9592	.8219	.6846	.5473	.4100	.1354	.8608	.5862
357	.6458	.5086	.3713	.2340	.0967	.9594	.8221	.6848	.5476	.4103	.1357	.8611	.5866
431360	33.6461	34.5088	35.3715	36.2342	37.0970	37.9597	38.8224	39.6851	40.5478	41.4106	43.1360	44.8614	46.5869
363	.6463	.5090	.3718	.2345	.0972	.9599	.8227	.6854	.5481	.4108	.1363	.8618	.5872
366	.6465	.5093	.3720	.2347	.0975	.9602	.8229	.6857	.5484	.4111	.1366	.8621	.5875
369	.6468	.5095	.3723	.2350	.0977	.9605	.8232	.6859	.5487	.4114	.1369	.8624	.5879
372	.6470	.5098	.3725	.2352	.0980	.9607	.8235	.6862	.5490	.4117	.1372	.8627	.5882
431375	33.6473	34.5100	35.3728	36.2355	37.0983	37.9610	38.8238	39.6865	40.5493	41.4120	43.1375	44.8630	46.5885
378	.6475	.5102	.3730	.2358	.0985	.9613	.8240	.6868	.5495	.4123	.1378	.8633	.5888
381	.6477	.5105	.3732	.2360	.0988	.9615	.8243	.6871	.5498	.4126	.1381	.8636	.5891
384	.6480	.5107	.3735	.2363	.0990	.9618	.8246	.6873	.5501	.4129	.1384	.8639	.5895
387	.6482	.5110	.3737	.2365	.0993	.9621	.8248	.6876	.5504	.4132	.1387	.8642	.5898
431390	33.6484	34.5112	35.3740	36.2368	37.0995	37.9623	38.8251	39.6879	40.5507	41.4134	43.1390	44.8646	46.5901
393	.6487	.5114	.3742	.2370	.0998	.9626	.8254	.6882	.5509	.4137	.1393	.8649	.5904
396	.6489	.5117	.3745	.2373	.1001	.9628	.8256	.6884	.5512	.4140	.1396	.8652	.5908
399	.6491	.5119	.3747	.2375	.1003	.9631	.8259	.6887	.5515	.4143	.1399	.8655	.5911
402	.6494	.5122	.3750	.2378	.1006	.9634	.8262	.6890	.5518	.4146	.1402	.8658	.5914
431405	33.6496	34.5124	35.3752	36.2380	37.1008	37.9636	38.8265	39.6893	40.5521	41.4149	43.1405	44.8661	46.5917
408	.6498	.5126	.3755	.2383	.1011	.9639	.8267	.6895	.5524	.4152	.1408	.8664	.5921
411	.6501	.5129	.3757	.2385	.1013	.9642	.8270	.6898	.5526	.4155	.1411	.8667	.5924
414	.6503	.5131	.3759	.2388	.1016	.9644	.8273	.6901	.5529	.4157	.1414	.8671	.5927
417	.6505	.5134	.3762	.2390	.1019	.9647	.8275	.6904	.5532	.4160	.1417	.8674	.5930
431420	33.6508	34.5136	35.3764	36.2393	37.1021	37.9650	38.8278	39.6906	40.5535	41.4163	43.1420	44.8677	46.5934
423	.6510	.5138	.3767	.2395	.1024	.9652	.8281	.6909	.5538	.4166	.1423	.8680	.5937
426	.6512	.5141	.3769	.2398	.1026	.9655	.8283	.6912	.5540	.4169	.1426	.8683	.5940
429	.6515	.5143	.3772	.2400	.1029	.9658	.8286	.6915	.5543	.4172	.1429	.8686	.5943
432	.6517	.5146	.3774	.2403	.1032	.9660	.8289	.6917	.5546	.4175	.1432	.8689	.5947
431435	33.6519	34.5148	35.3777	36.2405	37.1034	37.9663	38.8292	39.6920	40.5549	41.4178	43.1435	44.8692	46.5950
438	.6522	.5150	.3779	.2408	.1037	.9665	.8294	.6923	.5552	.4180	.1438	.8696	.5953
441	.6524	.5153	.3782	.2410	.1039	.9668	.8297	.6926	.5555	.4183	.1441	.8699	.5956
444	.6526	.5155	.3784	.2413	.1042	.9671	.8300	.6928	.5557	.4186	.1444	.8702	.5960
447	.6529	.5158	.3787	.2415	.1044	.9673	.8302	.6931	.5560	.4189	.1447	.8705	.5963
431450	33.6531	34.5160	35.3789	36.2418	37.1047	37.9676	38.8305	39.6934	40.5563	41.4192	43.1450	44.8708	46.5966
453	.6533	.5162	.3791	.2421	.1050	.9679	.8308	.6937	.5566	.4195	.1453	.8711	.5969
456	.6536	.5165	.3794	.2423	.1052	.9681	.8310	.6940	.5569	.4198	.1456	.8714	.5972
459	.6538	.5167	.3796	.2426	.1055	.9684	.8313	.6942	.5571	.4201	.1459	.8717	.5976
462	.6540	.5170	.3799	.2428	.1057	.9687	.8316	.6945	.5574	.4204	.1462	.8720	.5979
431465	33.6543	34.5172	35.3801	36.2431	37.1060	37.9689	38.8319	39.6948	40.5577	41.4206	43.1465	44.8724	46.5982
468	.6545	.5174	.3804	.2433	.1062	.9692	.8321	.6951	.5580	.4209	.1468	.8727	.5985
471	.6547	.5177	.3806	.2436	.1065	.9694	.8324	.6953	.5583	.4212	.1471	.8730	.5989
474	.6550	.5179	.3809	.2438	.1068	.9697	.8327	.6956	.5586	.4215	.1474	.8733	.5992
477	.6552	.5182	.3811	.2441	.1070	.9700	.8329	.6959	.5588	.4218	.1477	.8736	.5995
431480	33.6554	34.5184	35.3814	36.2443	37.1073	37.9702	38.8332	39.6962	40.5591	41.4221	43.1480	44.8739	46.5998
483	.6557	.5186	.3816	.2446	.1075	.9705	.8335	.6964	.5594	.4224	.1483	.8742	.6002
486	.6559	.5189	.3819	.2448	.1078	.9708	.8337	.6967	.5597	.4227	.1486	.8745	.6005
489	.6561	.5191	.3821	.2451	.1081	.9710	.8340	.6970	.5600	.4229	.1489	.8749	.6008
492	.6564	.5194	.3823	.2453	.1083	.9713	.8343	.6973	.5602	.4232	.1492	.8752	.6011
431495	33.6566	34.5196	35.3826	36.2456	37.1086	37.9716	38.8346	39.6975	40.5605	41.4235	43.1495	44.8755	46.6015
498	.6568	.5198	.3828	.2458	.1088	.9718	.8348	.6978	.5608	.4238	.1498	.8758	.6018
501	.6571	.5201	.3831	.2461	.1091	.9721	.8351	.6981	.5611	.4241	.1501	.8761	.6021
504	.6573	.5203	.3833	.2463	.1093	.9724	.8354	.6984	.5614	.4244	.1504	.8764	.6024
507	.6575	.5206	.3836	.2466	.1096	.9726	.8356	.6986	.5617	.4247	.1507	.8767	.6028
431510	33.6578	34.5208	35.3838	36.2468	37.1099	37.9729	38.8359	39.6989	40.5619	41.4250	43.1510	44.8770	46.6031
513	.6580	.5210	.3841	.2471	.1101	.9731	.8362	.6992	.5622	.4252	.1513	.8774	.6034
516	.6582	.5213	.3843	.2473	.1104	.9734	.8364	.6995	.5625	.4255	.1516	.8777	.6037
519	.6585	.5215	.3846	.2476	.1106	.9737	.8367	.6997	.5628	.4258	.1519	.8780	.6041
522	.6587	.5218	.3848	.2478	.1109	.9739	.8370	.7000	.5631	.4261	.1522	.8783	.6044
431525	33.6590	34.5220	35.3851	36.2481	37.1112	37.9742	38.8373	39.7003	40.5634	41.4264	43.1525	44.8786	46.6047
528	.6592	.5222	.3853	.2484	.1114	.9745	.8375	.7006	.5636	.4267	.1528	.8789	.6050
531	.6594	.5225	.3855	.2486	.1117	.9747	.8378	.7009	.5639	.4270	.1531	.8792	.6053
534	.6597	.5227	.3858	.2489	.1119	.9750	.8381	.7011	.5642	.4273	.1534	.8795	.6057
537	.6599	.5230	.3860	.2491	.1122	.9753	.8383	.7014	.5645	.4276	.1537	.8798	.6060
431540	33.6601	34.5232	35.3863	36.2494	37.1124	37.9755	38.8386	39.7017	40.5648	41.4278	43.1540	44.8802	46.6063
543	.6604	.5234	.3865	.2496	.1127	.9758	.8389	.7020	.5650	.4281	.1543	.8805	.6066
546	.6606	.5237	.3868	.2499	.1130	.9760	.8391	.7022	.5653	.4284	.1546	.8808	.6070
549	.6608	.4239	.3870	.2501	.1132	.9763	.8394	.7025	.5656	.4287	.1549	.8811	.6073
552	.6611	.5242	.3873	.2504	.1135	.9766	.8397	.7028	.5659	.4290	.1552	.8814	.6076
431555	33.6613	34.5244	35.3875	36.2506	37.1137	37.9768	38.8400	39.7031	40.5662	41.4293	43.1555	44.8817	46.6079
558	.6615	.5246	.3878	.2509	.1140	.9771	.8402	.7033	.5665	.4296	.1558	.8820	.6083
561	.6618	.5249	.3880	.2511	.1142	.9774	.8405	.7036	.5667	.4299	.1561	.8823	.6086
564	.6620	.5251	.3882	.2514	.1145	.9776	.8408	.7039	.5670	.4301	.1564	.8827	.6089
567	.6622	.5254	.3885	.2516	.1148	.9779	.8410	.7042	.5673	.4304	.1567	.8830	.6092
431570	33.6625	34.5256	35.3887	36.2519	37.1150	37.9782	38.8413	39.7044	40.5676	41.4307	43.1570	44.8833	46.6096
573	.6627	.5258	.3890	.2521	.1153	.9784	.8416	.7047	.5679	.4310	.1573	.8836	.6099
576	.6629	.5261	.3892	.2524	.1155	.9787	.8418	.7050	.5681	.4313	.1576	.8839	.6102
579	.6632	.5263	.3895	.2526	.1158	.9790	.8421	.7053	.5684	.4316	.1579	.8842	.6105
582	.6634	.5266	.3897	.2529	.1161	.9792	.8424	.7055	.5687	.4319	.1582	.8845	.6109
431585	33.6636	34.5268	35.3900	36.2531	37.1163	37.9795	38.8427	39.7058	40.5690	41.4322	43.1585	44.8848	46.6112
588	.6639	.5270	.3902	.2534	.1166	.9797	.8429	.7061	.5693	.4324	.1588	.8852	.6115
591	.6641	.5273	.3905	.2536	.1168	.9800	.8432	.7064	.5696	.4327	.1591	.8855	.6118
594	.6643	.5275	.3907	.2539	.1171	.9803	.8435	.7066	.5698	.4330	.1594	.8858	.6122
597	.6646	.5278	.3910	.2541	.1173	.9805	.8437	.7069	.5701	.4333	.1597	.8861	.6125
431600	33.6648	34.5280	35.3912	36.2544	37.1176	37.9808	38.8440	39.7072	40.5704	41.4336	43.1600	44.8864	46.6128

H A R M O N I C S

BASIC FREQ.	52	54	56	58	60	62	64	66	68	70	72	74	76
431600	22.4432	23.3064	24.1696	25.0328	25.8960	26.7592	27.6224	28.4856	29.3488	30.2120	31.0752	31.9384	32.8016
603	.4434	.3066	.1698	.0330	.8962	.7594	.6226	.4858	.3490	.2122	.0754	.9386	.8018
606	.4435	.3067	.1699	.0331	.8964	.7596	.6228	.4860	.3492	.2124	.0756	.9388	.8021
609	.4437	.3069	.1701	.0333	.8965	.7598	.6230	.4862	.3494	.2126	.0758	.9391	.8023
612	.4438	.3070	.1703	.0335	.8967	.7599	.6232	.4864	.3496	.2128	.0761	.9393	.8025
431615	22.4440	23.3072	24.1704	25.0337	25.8969	26.7601	27.6234	28.4866	29.3498	30.2131	31.0763	31.9395	32.8027
618	.4441	.3074	.1706	.0338	.8971	.7603	.6236	.4868	.3500	.2133	.0765	.9397	.8030
621	.4443	.3075	.1708	.0340	.8973	.7605	.6237	.4870	.3502	.2135	.0767	.9400	.8032
624	.4444	.3077	.1709	.0342	.8974	.7607	.6239	.4872	.3504	.2137	.0769	.9402	.8034
627	.4446	.3079	.1711	.0344	.8976	.7609	.6241	.4874	.3506	.2139	.0771	.9404	.8037
431630	22.4448	23.3080	24.1713	25.0345	25.8978	26.7611	27.6243	28.4876	29.3508	30.2141	31.0774	31.9406	32.8039
633	.4449	.3082	.1714	.0347	.8980	.7612	.6245	.4878	.3510	.2143	.0776	.9408	.8041
636	.4451	.3083	.1716	.0349	.8982	.7614	.6247	.4880	.3512	.2145	.0778	.9411	.8043
639	.4452	.3085	.1718	.0351	.8983	.7616	.6249	.4882	.3515	.2147	.0780	.9413	.8046
642	.4454	.3087	.1720	.0352	.8985	.7618	.6251	.4884	.3517	.2149	.0782	.9415	.8048
431645	22.4455	23.3088	24.1721	25.0354	25.8987	26.7620	27.6253	28.4886	29.3519	30.2152	31.0784	31.9417	32.8050
648	.4457	.3090	.1723	.0356	.8989	.7622	.6255	.4888	.3521	.2154	.0787	.9420	.8052
651	.4459	.3092	.1725	.0358	.8991	.7624	.6257	.4890	.3523	.2156	.0789	.9422	.8055
654	.4460	.3093	.1726	.0359	.8992	.7625	.6259	.4892	.3525	.2158	.0791	.9424	.8057
657	.4462	.3095	.1728	.0361	.8994	.7627	.6260	.4894	.3527	.2160	.0793	.9426	.8059
431660	22.4463	23.3096	24.1730	25.0363	25 8996	26.7629	27.6262	28.4896	39.3529	30.2162	31.0795	31.9428	32.8062
663	.4465	.3098	.1731	.0365	.8998	.7631	.6264	.4898	.3531	.2164	.0797	.9431	.8064
666	.4466	.3100	.1733	.0366	.9000	.7633	.6266	.4900	.3533	.2166	.0800	.9433	.8066
669	.4468	.3101	.1735	.0368	.9001	.7635	.6268	.4902	.3535	.2168	.0802	.9435	.8068
672	.4469	.3103	.1736	.0370	.9003	.7637	.6270	.4904	.3537	.2170	.0804	.9437	.8071
431675	22.4471	23.3105	24.1738	25.0372	25.9005	26.7639	27.6272	28 4906	29.3539	30.2173	31.0806	31.9440	32.8073
678	.4473	.3106	.1740	.0373	.9007	.7640	.6274	.4907	.3541	.2175	.0808	.9442	.8075
681	.4474	.3108	.1741	.0375	.9009	.7642	.6276	.4909	.3543	.2177	.0810	.9444	.8078
684	.4476	.3109	.1743	.0377	.9010	.7644	.6278	.4911	.3545	.2179	.0812	.9446	.8080
687	.4477	.3111	.1745	.0378	.9012	.7646	.6280	.4913	.3547	.2181	.0815	.9448	.8082
431690	22.4479	23.3113	24.1746	25.0380	25.9014	26.7648	27.6282	28.4915	29.3549	30.2183	31.0817	31.9451	32.8084
693	.4480	.3114	.1748	.0382	.9016	.7650	.6284	.4917	.3551	.2185	.0819	.9453	.8087
696	.4482	.3116	.1750	.0384	.9018	.7652	.6285	.4919	.3553	.2187	.0821	.9455	.8089
699	.4483	.3117	.1751	.0385	.9019	.7653	.6287	.4921	.3555	.2189	.0823	.9457	.8091
702	.4485	.3119	.1753	.0387	.9021	.7655	.6289	.4923	.3557	.2191	.0825	.9459	.8094
431705	22.4487	23.3121	24.1755	25.0389	25.9023	26.7657	27.6291	28.4925	29.3559	30.2194	31.0828	31.9462	32.8096
708	.4488	.3122	.1756	.0391	.9025	.7659	.6293	.4927	.3561	.2196	.0830	.9464	.8098
711	.4490	.3124	.1758	.0392	.9027	.7661	.6295	.4929	.3563	.2198	.0832	.9466	.8100
714	.4491	.3126	.1760	.0394	.9028	.7663	.6297	.4931	.3566	.2200	.0834	.9468	.8103
717	.4493	.3127	.1762	.0396	.9030	.7665	.6299	.4933	.3568	.2202	.0836	.9471	.8105
431720	22.4494	23.3129	24.1763	25.0398	25.9032	26.7666	27.6301	28.4935	29.3570	30.2204	31.0838	31.9473	32.8107
723	.4496	.3130	.1765	.0399	.9034	.7668	.6303	.4937	.3572	.2206	.0841	.9475	.8109
726	.4498	.3132	.1767	.0401	.9036	.7670	.6305	.4939	.3574	.2208	.0843	.9477	.8112
729	.4499	.3134	.1768	.0403	.9037	.7672	.6307	.4941	.3576	.2210	.0845	.9479	.8114
732	.4501	.3135	.1770	.0405	.9039	.7674	.6308	.4943	.3578	.2212	.0847	.9482	.8116
431735	22.4502	23.3137	24.1772	25.0406	25.9041	26.7676	27.6310	28.4945	29.3580	30.2215	31.0849	31.9484	32.8119
738	.4504	.3139	.1773	.0408	.9043	.7678	.6312	.4947	.3582	.2217	.0851	.9486	.8121
741	.4505	.3140	.1775	.0410	.9045	.7679	.6314	.4949	.3584	.2219	.0854	.9488	.8123
744	.4507	.3142	.1777	.0412	.9046	.7681	.6316	.4951	.3586	.2221	.0856	.9491	.8125
747	.4508	.3143	.1778	.0413	.9048	.7683	.6318	.4953	.3588	.2223	.0858	.9493	.8128
431750	22.4510	23.3145	24.1780	25.0415	25.9050	26.7685	27.6320	28.4955	29.3590	30.2225	31.0860	31.9495	32.8130
753	.4512	.3147	.1782	.0417	.9052	.7687	.6322	.4957	.3592	.2227	.0862	.9497	.8132
756	.4513	.3148	.1783	.0418	.9054	.7689	.6324	.4959	.3594	.2229	.0864	.9499	.8135
759	.4515	.3150	.1785	.0420	.9055	.7691	.6326	.4961	.3596	.2231	.0866	.9502	.8137
762	.4516	.3151	.1787	.0422	.9057	.7692	.6328	.4963	.3598	.2233	.0869	.9504	.8139
431765	22.4518	23.3153	24.1788	25.0424	25.9059	26.7694	27.6330	28.4965	29.3600	30.2236	31.0871	31.9506	32.8141
768	.4519	.3155	.1790	.0425	.9061	.7696	.6332	.4967	.3602	.2238	.0873	.9508	.8144
771	.4521	.3156	.1792	.0427	.9063	.7698	.6333	.4969	.3604	.2240	.0875	.9511	.8146
774	.4522	.3158	.1793	.0429	.9064	.7700	.6335	.4971	.3606	.2242	.0877	.9513	.8148
777	.4524	.3160	.1795	.0431	.9066	.7702	.6337	.4973	.3608	.2244	.0879	.9515	.8151
431780	22.4526	23.3161	24.1797	25.0432	25.9068	26.7704	27.6339	28.4975	29.3610	30.2246	31.0882	31.9517	32.8153
783	.4527	.3163	.1798	.0434	.9070	.7705	.6341	.4977	.3612	.2248	.0884	.9519	.8155
786	.4529	.3164	.1800	.0436	.9072	.7707	.6343	.4979	.3614	.2250	.0886	.9522	.8157
789	.4530	.3166	.1802	.0438	.9073	.7709	.6345	.4981	.3617	.2252	.0888	.9524	.8160
792	.4532	.3168	.1804	.0439	.9075	.7711	.6347	.4983	.3619	.2254	.0890	.9526	.8162
431795	22.4533	23.3169	24.1805	25.0441	25.9077	26.7713	27.6349	28.4985	29.3621	30.2257	31.0892	31.9528	32.8164
798	.4535	.3171	.1807	.0443	.9079	.7715	.6351	.4987	.3623	.2259	.0895	.9531	.8166
801	.4537	.3173	.1809	.0445	.9081	.7717	.6353	.4989	.3625	.2261	.0897	.9533	.8169
804	.4538	.3174	.1810	.0446	.9082	.7718	.6355	.4991	.3627	.2263	.0899	.9535	.8171
807	.4540	.3176	.1812	.0448	.9084	.7720	.6356	.4993	.3629	.2265	.0901	.9537	.8173
431810	22.4541	23.3177	24.1814	25.0450	25.9086	26.7722	27.6358	28.4995	29.3631	30.2267	31.0903	31.9539	32.8176
813	.4543	.3179	.1815	.0452	.9088	.7724	.6360	.4997	.3633	.2269	.0905	.9542	.8178
816	.4544	.3181	.1817	.0453	.9090	.7726	.6362	.4999	.3635	.2271	.0908	.9544	.8180
819	.4546	.3182	.1819	.0455	.9091	.7728	.6364	.5001	.3637	.2273	.0910	.9546	.8182
822	.4547	.3184	.1820	.0457	.9093	.7730	.6366	.5003	.3639	.2275	.0912	.9548	.8185
431825	22.4549	23.3186	24.1822	25.0459	25.9095	26.7732	27.6368	28.5005	29.3641	30.2278	31.0914	31.9551	32.8187
828	.4551	.3187	.1824	.0460	.9097	.7733	.6370	.5006	.3643	.2280	.0916	.9553	.8189
831	.4552	.3189	.1825	.0462	.9099	.7735	.6372	.5008	.3645	.2282	.0918	.9555	.8192
834	.4554	.3190	.1827	.0464	.9100	.7737	.6374	.5010	.3647	.2284	.0920	.9557	.8194
837	.4555	.3192	.1829	.0465	.9102	.7739	.6376	.5012	.3649	.2286	.0923	.9559	.8196
431840	22.4557	23.3194	24.1830	25.0467	25.9104	26.7741	27.6378	28.5014	29.3651	30.2288	31.0925	31.9562	32.8198
843	.4558	.3195	.1832	.0469	.9106	.7743	.6380	.5016	.3653	.2290	.0927	.9564	.8201
846	.4560	.3197	.1834	.0471	.9108	.7745	.6381	.5018	.3655	.2292	.0929	.9566	.8203
849	.4561	.3198	.1835	.0472	.9109	.7746	.6383	.5020	.3657	.2294	.0931	.9568	.8205
852	.4563	.3200	.1837	.0474	.9111	.7748	.6385	.5022	.3659	.2296	.0933	.9570	.8208
431855	22.4565	23.3202	24.1839	25.0476	25.9113	26.7750	27.6387	28.5024	29.3661	30.2299	31.0936	31.9573	32.8210
858	.4566	.3203	.1840	.0478	.9115	.7752	.6389	.5026	.3663	.2301	.0938	.9575	.8212
861	.4568	.3205	.1842	.0479	.9117	.7754	.6391	.5028	.3665	.2303	.0940	.9577	.8214
864	.4569	.3207	.1844	.0481	.9118	.7756	.6393	.5030	.3668	.2305	.0942	.9579	.8217
867	.4571	.3208	.1846	.0483	.9120	.7758	.6395	.5032	.3670	.2307	.0944	.9582	.8219
431870	22.4572	23.3210	24.1847	25.0485	25.9122	26.7759	27.6397	28.5034	29.3672	30.2309	31.0946	31.9584	32.8221
873	.4574	.3211	.1849	.0486	.9124	.7761	.6399	.5036	.3674	.2311	.0949	.9586	.8223
876	.4576	.3213	.1851	.0488	.9126	.7763	.6401	.5038	.3676	.2313	.0951	.9588	.8226
879	.4577	.3215	.1852	.0490	.9127	.7765	.6403	.5040	.3678	.2315	.0953	.9590	.8228
882	.4579	.3216	.1854	.0492	.9129	.7767	.6404	.5042	.3680	.2317	.0955	.9593	.8230
431885	22.4580	23.3218	24.1856	25.0493	25.9131	26.7769	27.6406	28.5044	29.3682	30.2320	31.0957	31.9595	32.8233
888	.4582	.3220	.1857	.0495	.9133	.7771	.6408	.5046	.3684	.2322	.0959	.9597	.8235
891	.4583	.3221	.1859	.0497	.9135	.7772	.6410	.5048	.3686	.2324	.0962	.9599	.8237
894	.4585	.3223	.1861	.0499	.9136	.7774	.6412	.5050	.3688	.2326	.0964	.9602	.8239
897	.4586	.3224	.1862	.0500	.9138	.7776	.6414	.5052	.3690	.2328	.0966	.9604	.8242
431900	22.4588	23.3226	24.1864	25.0502	25.9140	26.7778	27.6416	28.5054	29.3692	30.2330	31.0968	31.9606	32.8244

MEGACYCLES PER SECOND

H A R M O N I C S

BASIC FREQ.	78	80	82	84	86	88	90	92	94	96	100	104	108
431600	33.6648	34.5280	35.3912	36.2544	37.1176	37.9808	38.8440	39.7072	40.5704	41.4336	43.1600	44.8864	46.6128
603	.6650	.5282	.3914	.2547	.1179	.9811	.8443	.7075	.5707	.4339	.1603	.8867	.6131
606	.6653	.5285	.3917	.2549	.1181	.9813	.8445	.7078	.5710	.4342	.1606	.8870	.6134
609	.6655	.5287	.3919	.2552	.1184	.9816	.8448	.7080	.5712	.4345	.1609	.8873	.6138
612	.6657	.5290	.3922	.2554	.1186	.9819	.8451	.7083	.5715	.4348	.1612	.8876	.6141
431615	33.6660	34.5292	35.3924	36.2557	37.1189	37.9821	38.8454	39.7086	40.5718	41.4350	43.1615	44.8880	46.6144
618	.6662	.5294	.3927	.2559	.1191	.9824	.8456	.7089	.5721	.4353	.1618	.8883	.6147
621	.6664	.5297	.3929	.2562	.1194	.9826	.8459	.7091	.5724	.4356	.1621	.8886	.6151
624	.6667	.5299	.3932	.2564	.1197	.9829	.8462	.7094	.5727	.4359	.1624	.8889	.6154
627	.6669	.5302	.3934	.2567	.1199	.9832	.8464	.7097	.5729	.4362	.1627	.8892	.6157
431630	33.6671	34.5304	35.3937	36.2569	37.1202	37.9834	38.8467	39.7100	40.5732	41.4365	43.1630	44.8895	46.6160
633	.6674	.5306	.3939	.2572	.1204	.9837	.8470	.7102	.5735	.4368	.1633	.8898	.6164
636	.6676	.5309	.3942	.2574	.1207	.9840	.8472	.7105	.5738	.4371	.1636	.8901	.6167
639	.6678	.5311	.3944	.2577	.1210	.9842	.8475	.7108	.5741	.4373	.1639	.8905	.6170
642	.6681	.5314	.3946	.2579	.1212	.9845	.8478	.7111	.5743	.4376	.1642	.8908	.6173
431645	33.6683	34.5316	35.3949	36.2582	37.1215	37.9848	38.8481	39.7113	40.5746	41.4379	43.1645	44.8911	46.6177
648	.6685	.5318	.3951	.2584	.1217	.9850	.8483	.7116	.5749	.4382	.1648	.8914	.6180
651	.6688	.5321	.3954	.2587	.1220	.9853	.8486	.7119	.5752	.4385	.1651	.8917	.6183
654	.6690	.5323	.3956	.2589	.1222	.9856	.8489	.7122	.5755	.4388	.1654	.8920	.6186
657	.6692	.5326	.3959	.2592	.1225	.9858	.8491	.7124	.5758	.4391	.1657	.8923	.6190
431660	33.6695	34.5328	35.3961	36.2594	37.1228	37.9861	38.8494	39.7127	40.5760	41.4394	43.1660	44.8926	46.6193
663	.6697	.5330	.3964	.2597	.1230	.9863	.8497	.7130	.5763	.4396	.1663	.8930	.6196
666	.6699	.5333	.3966	.2599	.1233	.9866	.8499	.7133	.5766	.4399	.1666	.8933	.6199
669	.6702	.5335	.3969	.2602	.1235	.9869	.8502	.7135	.5769	.4402	.1669	.8936	.6203
672	.6704	.5338	.3971	.2604	.1238	.9871	.8505	.7138	.5772	.4405	.1672	.8939	.6206
431675	33.6707	34.5340	35.3974	36.2607	37.1241	37.9874	38.8508	39.7141	40.5775	41.4408	43.1675	44.8942	46.6209
678	.6709	.5342	.3976	.2610	.1243	.9877	.8510	.7144	.5777	.4411	.1678	.8945	.6212
681	.6711	.5345	.3978	.2612	.1246	.9879	.8513	.7147	.5780	.4414	.1681	.8948	.6215
684	.6714	.5347	.3981	.2615	.1248	.9882	.8516	.7149	.5783	.4417	.1684	.8951	.6219
687	.6716	.5350	.3983	.2617	.1251	.9885	.8518	.7152	.5786	.4420	.1687	.8954	.6222
431690	33.6718	34.5352	35.3986	36.2620	37.1253	37.9887	38.8521	39.7155	40.5789	41.4422	43.1690	44.8958	46.6225
693	.6721	.5354	.3988	.2622	.1256	.9890	.8524	.7158	.5791	.4425	.1693	.8961	.6228
696	.6723	.5357	.3991	.2625	.1259	.9892	.8526	.7160	.5794	.4428	.1696	.8964	.6232
699	.6725	.5359	.3993	.2627	.1261	.9895	.8529	.7163	.5797	.4431	.1699	.8967	.6235
702	.6728	.5362	.3996	.2630	.1264	.9898	.8532	.7166	.5800	.4434	.1702	.8970	.6238
431705	33.6730	34.5364	35.3998	36.2632	37.1266	37.9900	38.8535	39.7169	40.5803	41.4437	43.1705	44.8973	46.6241
708	.6732	.5366	.4001	.2635	.1269	.9903	.8537	.7171	.5806	.4440	.1708	.8976	.6245
711	.6735	.5369	.4003	.2637	.1271	.9906	.8540	.7174	.5808	.4443	.1711	.8979	.6248
714	.6737	.5371	.4005	.2640	.1274	.9908	.8543	.7177	.5811	.4445	.1714	.8983	.6251
717	.6739	.5374	.4008	.2642	.1277	.9911	.8545	.7180	.5814	.4448	.1717	.8986	.6254
431720	33.6742	34.5376	35.4010	36.2645	37.1279	37.9914	38.8548	39.7182	40.5817	41.4451	43.1720	44.8989	46.6258
723	.6744	.5378	.4013	.2647	.1282	.9916	.8551	.7185	.5820	.4454	.1723	.8992	.6261
726	.6746	.5381	.4015	.2650	.1284	.9919	.8553	.7188	.5822	.4457	.1726	.8995	.6264
729	.6749	.5383	.4018	.2652	.1287	.9922	.8556	.7191	.5825	.4460	.1729	.8998	.6267
732	.6751	.5386	.4020	.2655	.1290	.9924	.8559	.7193	.5828	.4463	.1732	.9001	.6271
431735	33.6753	34.5388	35.4023	36.2657	37.1292	37.9927	38.8562	39.7196	40.5831	41.4466	43.1735	44.9004	46.6274
738	.6756	.5390	.4025	.2660	.1295	.9929	.8564	.7199	.5834	.4468	.1738	.9008	.6277
741	.6758	.5393	.4028	.2662	.1297	.9932	.8567	.7202	.5837	.4471	.1741	.9011	.6280
744	.6760	.5395	.4030	.2665	.1300	.9935	.8570	.7204	.5839	.4474	.1744	.9014	.6284
747	.6763	.5398	.4033	.2667	.1302	.9937	.8572	.7207	.5842	.4477	.1747	.9017	.6287
431750	33.6765	34.5400	35.4035	36.2670	37.1305	37.9940	38.8575	39.7210	40.5845	41.4480	43.1750	44.9020	46.6290
753	.6767	.5402	.4037	.2673	.1308	.9943	.8578	.7213	.5848	.4483	.1753	.9023	.6293
756	.6770	.5405	.4040	.2675	.1310	.9945	.8580	.7216	.5851	.4486	.1756	.9026	.6296
759	.6772	.5407	.4042	.2678	.1313	.9948	.8583	.7218	.5853	.4489	.1759	.9029	.6300
762	.6774	.5410	.4045	.2680	.1315	.9951	.8586	.7221	.5856	.4492	.1762	.9032	.6303
431765	33.6777	34.5412	35.4047	36.2683	37.1318	37.9953	38.8589	39.7224	40.5859	41.4494	43.1765	44.9036	46.6306
768	.6779	.5414	.4050	.2685	.1320	.9956	.8591	.7227	.5862	.4497	.1768	.9039	.6309
771	.6781	.5417	.4052	.2688	.1323	.9958	.8594	.7229	.5865	.4500	.1771	.9042	.6313
774	.6784	.5419	.4055	.2690	.1326	.9961	.8597	.7232	.5868	.4503	.1774	.9045	.6316
777	.6786	.5422	.4057	.2693	.1328	.9964	.8599	.7235	.5870	.4506	.1777	.9048	.6319
431780	33.6788	34.5424	35.4060	36.2695	37.1331	37.9966	38.8602	39.7238	40.5873	41.4509	43.1780	44.9051	46.6322
783	.6791	.5426	.4062	.2698	.1333	.9969	.8605	.7240	.5876	.4512	.1783	.9054	.6326
786	.6793	.5429	.4065	.2700	.1336	.9972	.8607	.7243	.5879	.4515	.1786	.9057	.6329
789	.6795	.5431	.4067	.2703	.1339	.9974	.8610	.7246	.5882	.4517	.1789	.9061	.6332
792	.6798	.5434	.4069	.2705	.1341	.9977	.8613	.7249	.5884	.4520	.1792	.9064	.6335
431795	33.6800	34.5436	35.4072	36.2708	37.1344	37.9980	38.8616	39.7251	40.5887	41.4523	43.1795	44.9067	46.6339
798	.6802	.5438	.4074	.2710	.1346	.9982	.8618	.7254	.5890	.4526	.1798	.9070	.6342
801	.6805	.5441	.4077	.2713	.1349	.9985	.8621	.7257	.5893	.4529	.1801	.9073	.6345
804	.6807	.5443	.4079	.2715	.1351	.9988	.8624	.7260	.5896	.4532	.1804	.9076	.6348
807	.6809	.5446	.4082	.2718	.1354	.9990	.8626	.7262	.5899	.4535	.1807	.9079	.6352
431810	33.6812	34.5448	35.4084	36.2720	37.1357	37.9993	38.8629	39.7265	40.5901	41.4538	43.1810	44.9082	46.6355
813	.6814	.5450	.4087	.2723	.1359	.9995	.8632	.7268	.5904	.4540	.1813	.9086	.6358
816	.6816	.5453	.4089	.2725	.1362	.9998	.8634	.7271	.5907	.4543	.1816	.9089	.6361
819	.6819	.5455	.4092	.2728	.1364	38.0001	.8637	.7273	.5910	.4546	.1819	.9092	.6365
822	.6821	.5458	.4094	.2730	.1367	.0003	.8640	.7276	.5913	.4549	.1822	.9095	.6368
431825	33.6824	34.5460	35.4097	36.2733	37.1370	38.0006	38.8643	39.7279	40.5916	41.4552	43.1825	44.9098	46.6371
828	.6826	.5462	.4099	.2736	.1372	.0009	.8645	.7282	.5918	.4555	.1828	.9101	.6374
831	.6828	.5465	.4101	.2738	.1375	.0011	.8648	.7285	.5921	.4558	.1831	.9104	.6377
834	.6831	.5467	.4104	.2741	.1377	.0014	.8651	.7287	.5924	.4561	.1834	.9107	.6381
837	.6833	.5470	.4106	.2743	.1380	.0017	.8653	.7290	.5927	.4564	.1837	.9110	.6384
431840	33.6835	34.5472	35.4109	36.2746	37.1382	38.0019	38.8656	39.7293	40.5930	41.4566	43.1840	44.9114	46.6387
843	.6838	.5474	.4111	.2748	.1385	.0022	.8659	.7296	.5932	.4569	.1843	.9117	.6390
846	.6840	.5477	.4114	.2751	.1388	.0024	.8661	.7298	.5935	.4572	.1846	.9120	.6394
849	.6842	.5479	.4116	.2753	.1390	.0027	.8664	.7301	.5938	.4575	.1849	.9123	.6397
852	.6845	.5482	.4119	.2756	.1393	.0030	.8667	.7304	.5941	.4578	.1852	.9126	.6400
431855	33.6847	34.5484	35.4121	36.2758	37.1395	38.0032	38.8670	39.7307	40.5944	41.4581	43.1855	44.9129	46.6403
858	.6849	.5486	.4124	.2761	.1398	.0035	.8672	.7309	.5947	.4584	.1858	.9132	.6407
861	.6852	.5489	.4126	.2763	.1400	.0038	.8675	.7312	.5949	.4587	.1861	.9135	.6410
864	.6854	.5491	.4128	.2766	.1403	.0040	.8678	.7315	.5952	.4589	.1864	.9139	.6413
867	.6856	.5494	.4131	.2768	.1406	.0043	.8680	.7318	.5955	.4592	.1867	.9142	.6416
431870	33.6859	34.5496	35.4133	36.2771	37.1408	38.0046	38.8683	39.7320	40.5958	41.4595	43.1870	44.9145	46.6420
873	.6861	.5498	.4136	.2773	.1411	.0048	.8686	.7323	.5961	.4598	.1873	.9148	.6423
876	.6863	.5501	.4138	.2776	.1413	.0051	.8688	.7326	.5963	.4601	.1876	.9151	.6426
879	.6866	.5503	.4141	.2778	.1416	.0054	.8691	.7329	.5966	.4604	.1879	.9154	.6429
882	.6868	.5506	.4143	.2781	.1419	.0056	.8694	.7331	.5969	.4607	.1882	.9157	.6433
431885	33.6870	34.5508	35.4146	36.2783	37.1421	38.0059	38.8697	39.7334	40.5972	41.4610	43.1885	44.9160	46.6436
888	.6873	.5510	.4148	.2786	.1424	.0061	.8699	.7337	.5975	.4612	.1888	.9164	.6439
891	.6875	.5513	.4151	.2788	.1426	.0064	.8702	.7340	.5978	.4615	.1891	.9167	.6442
894	.6877	.5515	.4153	.2791	.1429	.0067	.8705	.7342	.5980	.4618	.1894	.9170	.6446
897	.6880	.5518	.4156	.2793	.1431	.0069	.8707	.7345	.5983	.4621	.1897	.9173	.6449
431900	33.6882	34.5520	35.4158	36.2796	37.1434	38.0072	38.8710	39.7348	40.5986	41.4624	43.1900	44.9176	46.6452

H A R M O N I C S

BASIC FREQ.	52	54	56	58	60	62	64	66	68	70	72	74	76
431900	22.4588	23.3226	24.1864	25.0502	25.9140	26.7778	27.6416	28.5054	29.3692	30.2330	31.0968	31.9606	32.8244
903	.4590	.3228	.1866	.0504	.9142	.7780	.6418	.5056	.3694	.2332	.0970	.9608	.8246
906	.4591	.3229	.1867	.0505	.9144	.7782	.6420	.5058	.3696	.2334	.0972	.9610	.8249
909	.4593	.3231	.1869	.0507	.9145	.7784	.6422	.5060	.3698	.2336	.0974	.9613	.8251
912	.4594	.3232	.1871	.0509	.9147	.7785	.6424	.5062	.3700	.2338	.0977	.9615	.8253
431915	22.4596	23.3234	24.1872	25.0511	25.9149	26.7787	27.6426	28.5064	29.3702	30.2341	31.0979	31.9617	32.8255
918	.4597	.3236	.1874	.0512	.9151	.7789	.6428	.5066	.3704	.2343	.0981	.9619	.8258
921	.4599	.3237	.1876	.0514	.9153	.7791	.6429	.5068	.3706	.2345	.0983	.9622	.8260
924	.4600	.3239	.1877	.0516	.9154	.7793	.6431	.5070	.3708	.2347	.0985	.9624	.8262
927	.4602	.3241	.1879	.0518	.9156	.7795	.6433	.5072	.3710	.2349	.0987	.9626	.8265
431930	22.4604	23.3242	24.1881	25.0519	25.9158	26.7797	27.6435	28.5074	29.3712	30.2351	31.0990	31.9628	32.8267
933	.4605	.3244	.1882	.0521	.9160	.7798	.6437	.5076	.3714	.2353	.0992	.9630	.8269
936	.4607	.3245	.1884	.0523	.9162	.7800	.6439	.5078	.3716	.2355	.0994	.9633	.8271
939	.4608	.3247	.1886	.0525	.9163	.7802	.6441	.5080	.3719	.2357	.0996	.9635	.8274
942	.4610	.3249	.1888	.0526	.9165	.7804	.6443	.5082	.3721	.2359	.0998	.9637	.8276
431945	22.4611	23.3250	24.1889	25.0528	25.9167	26.7806	27.6445	28.5084	29.3723	30.2362	31.1000	31.9639	32.8278
948	.4613	.3252	.1891	.0530	.9169	.7808	.6447	.5086	.3725	.2364	.1003	.9642	.8280
951	.4615	.3254	.1893	.0532	.9171	.7810	.6449	.5088	.3727	.2366	.1005	.9644	.8283
954	.4616	.3255	.1894	.0533	.9172	.7811	.6451	.5090	.3729	.2368	.1007	.9646	.8285
957	.4618	.3257	.1896	.0535	.9174	.7813	.6452	.5092	.3731	.2370	.1009	.9648	.8287
431960	22.4619	23.3258	24.1898	25.0537	25.9176	26.7815	27.6454	28.5094	29.3733	30.2372	31.1011	31.9650	32.8290
963	.4621	.3260	.1899	.0539	.9178	.7817	.6456	.5096	.3735	.2374	.1013	.9653	.8292
966	.4622	.3262	.1901	.0540	.9180	.7819	.6458	.5098	.3737	.2376	.1016	.9655	.8294
969	.4624	.3263	.1903	.0542	.9181	.7821	.6460	.5100	.3739	.2378	.1018	.9657	.8296
972	.4625	.3265	.1904	.0544	.9183	.7823	.6462	.5102	.3741	.2380	.1020	.9659	.8299
431975	22.4627	23.3267	24.1906	25.0546	25.9185	26.7825	27.6464	28.5104	29.3743	30.2383	31.1022	31.9662	32.8301
978	.4629	.3268	.1908	.0547	.9187	.7826	.6466	.5105	.3745	.2385	.1024	.9664	.8303
981	.4630	.3270	.1909	.0549	.9189	.7828	.6468	.5107	.3747	.2387	.1026	.9666	.8306
984	.4632	.3271	.1911	.0551	.9190	.7830	.6470	.5109	.3749	.2389	.1028	.9668	.8308
987	.4633	.3273	.1913	.0552	.9192	.7832	.6472	.5111	.3751	.2391	.1031	.9670	.8310
431990	22.4635	23.3275	24.1914	25.0554	25.9194	26.7834	27.6474	28.5113	29.3753	30.2393	31.1033	31.9673	32.8312
993	.4636	.3276	.1916	.0556	.9196	.7836	.6476	.5115	.3755	.2395	.1035	.9675	.8315
996	.4638	.3278	.1918	.0558	.9198	.7838	.6477	.5117	.3757	.2397	.1037	.9677	.8317
999	.4639	.3279	.1919	.0559	.9199	.7839	.6479	.5119	.3759	.2399	.1039	.9679	.8319
432002	.4641	.3281	.1921	.0561	.9201	.7841	.6481	.5121	.3761	.2401	.1041	.9681	.8322
432005	22.4643	23.3283	24.1923	25.0563	25.9203	26.7843	27.6483	28.5123	29.3763	30.2404	31.1044	31.9684	32.8324
008	.4644	.3284	.1924	.0565	.9205	.7845	.6485	.5125	.3765	.2406	.1046	.9686	.8326
011	.4646	.3286	.1926	.0566	.9207	.7847	.6487	.5127	.3767	.2408	.1048	.9688	.8328
014	.4647	.3288	.1928	.0368	.9208	.7849	.6489	.5129	.3770	.2410	.1050	.9690	.8331
017	.4649	.3289	.1930	.0570	.9210	.7851	.6491	.5131	.3772	.2412	.1052	.9693	.8333
432020	22.4650	23.3291	24.1931	25.0572	25.9212	26.7852	27.6493	28.5133	29.3774	30.2414	31.1054	31.9695	32.8335
023	.4652	.3292	.1933	.0573	.9214	.7854	.6495	.5135	.3776	.2416	.1057	.9697	.8337
026	.4654	.3294	.1935	.0575	.9216	.7856	.6497	.5137	.3778	.2418	.1059	.9699	.8340
029	.4655	.3296	.1936	.0577	.9217	.7858	.6499	.5139	.3780	.2420	.1061	.9701	.8342
032	.4657	.3297	.1938	.0579	.9219	.7860	.6500	.5141	.3782	.2422	.1063	.9704	.8344
432035	22.4658	23.3299	24.1940	25.0580	25.9221	26.7862	27.6502	28.5143	29.3784	30.2425	31.1065	31.9706	32.8347
038	.4660	.3301	.1941	.0582	.9223	.7864	.6504	.5145	.3786	.2427	.1067	.9708	.8349
041	.4661	.3302	.1943	.0584	.9225	.7865	.6506	.5147	.3788	.2429	.1070	.9710	.8351
044	.4663	.3304	.1945	.0586	.9226	.7867	.6508	.5149	.3790	.2431	.1072	.9713	.8353
047	.4664	.3305	.1946	.0587	.9228	.7869	.6510	.5151	.3792	.2433	.1074	.9715	.8356
432050	22.4666	23.3307	24.1948	25.0589	25.9230	26.7871	27.6512	28.5153	29.3794	30.2435	31.1076	31.9717	32.8358
053	.4668	.3309	.1950	.0591	.9232	.7873	.6514	.5155	.3796	.2437	.1078	.9719	.8360
056	.4669	.3310	.1951	.0592	.9234	.7875	.6516	.5157	.3798	.2439	.1080	.9721	.8363
059	.4671	.3312	.1953	.0594	.9235	.7877	.6518	.5159	.3800	.2441	.1082	.9724	.8365
062	.4672	.3313	.1955	.0596	.9237	.7878	.6520	.5161	.3802	.2443	.1085	.9726	.8367
432065	22.4674	23.3315	24.1956	25.0598	25.9239	26.7880	27.6522	28.5163	29.3804	30.2446	31.1087	31.9728	32.8369
068	.4675	.3317	.1958	.0599	.9241	.7882	.6524	.5165	.3806	.2448	.1089	.9730	.8372
071	.4677	.3318	.1960	.0601	.9243	.7884	.6525	.5167	.3808	.2450	.1091	.9733	.8374
074	.4678	.3320	.1961	.0603	.9244	.7886	.6527	.5169	.3810	.2452	.1093	.9735	.8376
077	.4680	.3322	.1963	.0605	.9246	.7888	.6529	.5171	.3812	.2454	.1095	.9737	.8379
432080	22.4682	23.3323	24.1965	25.0606	25.9248	26.7890	27.6531	28.5173	29.3814	30.2456	31.1098	31.9739	32.8381
083	.4683	.3325	.1966	.0608	.9250	.7891	.6533	.5175	.3816	.2458	.1100	.9741	.8383
086	.4685	.3326	.1968	.0610	.9252	.7893	.6535	.5177	.3818	.2460	.1102	.9744	.8385
089	.4686	.3328	.1970	.0612	.9253	.7895	.6537	.5179	.3821	.2462	.1104	.9746	.8388
092	.4688	.3330	.1972	.0613	.9255	.7897	.6539	.5181	.3823	.2464	.1106	.9748	.8390
432095	22.4689	23.3331	24.1973	25.0615	25.9257	26.7899	27.6541	28.5183	29.3825	30.2467	31.1108	31.9750	32.8392
098	.4691	.3333	.1975	.0617	.9259	.7901	.6543	.5185	.3827	.2469	.1111	.9753	.8394
101	.4693	.3335	.1977	.0619	.9261	.7903	.6545	.5187	.3829	.2471	.1113	.9755	.8397
104	.4694	.3336	.1978	.0620	.9262	.7904	.6547	.5189	.3831	.2473	.1115	.9757	.8399
107	.4696	.3338	.1980	.0622	.9264	.7906	.6548	.5191	.3833	.2475	.1117	.9759	.8401
432110	22.4697	23.3339	24.1982	25.0624	25.9266	26.7908	27.6550	28.5193	29.3835	30.2477	31.1119	31.9761	32.8404
113	.4699	.3341	.1983	.0626	.9268	.7910	.6552	.5195	.3837	.2479	.1121	.9764	.8406
116	.4700	.3343	.1985	.0627	.9270	.7912	.6554	.5197	.3839	.2481	.1124	.9766	.8408
119	.4702	.3344	.1987	.0629	.9271	.7914	.6556	.5199	.3841	.2483	.1126	.9768	.8410
122	.4703	.3346	.1988	.0631	.9273	.7916	.6558	.5201	.3843	.2485	.1128	.9770	.8413
432125	22.4705	23.3348	24.1990	25.0633	25.9275	26.7918	27.6560	28.5203	29.3845	30.2488	31.1130	31.9773	32.8415
128	.4707	.3349	.1992	.0634	.9277	.7919	.6562	.5204	.3847	.2490	.1132	.9775	.8417
131	.4708	.3351	.1993	.0636	.9279	.7921	.6564	.5206	.3849	.2492	.1134	.9777	.8420
134	.4710	.3352	.1995	.0638	.9280	.7923	.6566	.5208	.3851	.2494	.1136	.9779	.8422
137	.4711	.3354	.1997	.0639	.9282	.7925	.6568	.5210	.3853	.2496	.1139	.9781	.8424
432140	22.4713	23.3356	24.1998	25.0641	25.9284	26.7927	27.6570	28.5212	29.3855	30.2498	31.1141	31.9784	32.8426
143	.4714	.3357	.2000	.0643	.9386	.7929	.6572	.5214	.3857	.2500	.1143	.9786	.8429
146	.4716	.3359	.2002	.0645	.9288	.7931	.6573	.5216	.3859	.2502	.1145	.9788	.8431
149	.4717	.3360	.2003	.0646	.9289	.7932	.6575	.5218	.3861	.2504	.1147	.9790	.8433
152	.4719	.3362	.2005	.0648	.9291	.7934	.6577	.5220	.3863	.2506	.1149	.9792	.8436
432155	22.4721	23.3364	24.2007	25.0650	25.9293	26.7936	27.6579	28.5222	29.3865	30.2509	31.1152	31.9795	32.8438
158	.4722	.3365	.2008	.0652	.9295	.7938	.6581	.5224	.3867	.2511	.1154	.9797	.8440
161	.4724	.3367	.2010	.0653	.9297	.7940	.6583	.5226	.3869	.2513	.1156	.9799	.8442
164	.4725	.3369	.2012	.0655	.9298	.7942	.6585	.5228	.3872	.2515	.1158	.9801	.8445
167	.4727	.3370	.2014	.0657	.9300	.7944	.6587	.5230	.3874	.2517	.1160	.9804	.8447
432170	22.4728	23.3372	24.2015	25.0659	25.9302	26.7945	27.6589	28.5232	29.3876	30.2519	31.1162	31.9806	32.8449
173	.4730	.3373	.2017	.0660	.9304	.7947	.6591	.5234	.3878	.2521	.1165	.9808	.8451
176	.4732	.3375	.2019	.0662	.9306	.7949	.6593	.5236	.3880	.2523	.1167	.9810	.8454
179	.4733	.3377	.2020	.0664	.9307	.7951	.6595	.5238	.3882	.2525	.1169	.9812	.8456
182	.4735	.3378	.2022	.0666	.9309	.7953	.6596	.5240	.3884	.2527	.1171	.9815	.8458
432185	22.4736	23.3380	24.2024	25.0667	25.9311	26.7955	27.6598	28.5242	29.3886	30.2530	31.1173	31.9817	32.8461
188	.4738	.3382	.2025	.0669	.9313	.7957	.6600	.5244	.3888	.2532	.1175	.9819	.8463
191	.4739	.3383	.2027	.0671	.9315	.7958	.6602	.5246	.3890	.2534	.1178	.9821	.8465
194	.4741	.3385	.2029	.0673	.9316	.7960	.6604	.5248	.3892	.2536	.1180	.9824	.8467
197	.4742	.3386	.2030	.0674	.9318	.7962	.6606	.5250	.3894	.2538	.1182	.9826	.8470
432200	22.4744	23.3388	24.2032	25.0676	25.9320	26.7964	27.6608	28.5252	29.3896	30.2540	31.1184	31.9828	32.8472

MEGACYCLES PER SECOND

BASIC	HARMONICS												
FREQ.	78	80	82	84	86	88	90	92	94	96	100	104	108
431900	33.6882	34.5520	35.4158	36.2796	37.1434	38.0072	38.8710	39.7348	40.5986	41.4624	43.1900	44.9176	46.6452
903	.6884	.5522	.4160	.2799	.1437	.0075	.8713	.7351	.5989	.4627	.1903	.9179	.6455
906	.6887	.5525	.4163	.2801	.1439	.0077	.8715	.7354	.5992	.4630	.1906	.9182	.6458
909	.6889	.5527	.4165	.2804	.1442	.0080	.8718	.7356	.5994	.4633	.1909	.9185	.6462
912	.6891	.5530	.4168	.2806	.1444	.0083	.8721	.7359	.5997	.4636	.1912	.9188	.6465
431915	33.6894	34.5532	35.4170	36.2809	37.1447	38.0085	38.8724	39.7362	40.6000	41.4638	43.1915	44.9192	46.6468
918	.6896	.5534	.4173	.2811	.1449	.0088	.8726	.7365	.6003	.4641	.1918	.9195	.6471
921	.6898	.5537	.4175	.2814	.1452	.0090	.8729	.7367	.6006	.4644	.1921	.9198	.6475
924	.6901	.5539	.4178	.2816	.1455	.0093	.8732	.7370	.6009	.4647	.1924	.9201	.6478
927	.6903	.5542	.4180	.2819	.1457	.0096	.8734	.7373	.6011	.4650	.1927	.9204	.6481
431930	33.6905	34.5544	35.4183	36.2821	37.1460	38.0098	38.8737	39.7376	40.6014	41.4653	43.1930	44.9207	46.6484
933	.6908	.5546	.4185	.2824	.1462	.0101	.8740	.7378	.6017	.4656	.1933	.9210	.6488
936	.6910	.5549	.4188	.2826	.1465	.0104	.8742	.7381	.6020	.4659	.1936	.9213	.6491
939	.6912	.5551	.4190	.2829	.1468	.0106	.8745	.7384	.6023	.4661	.1939	.9217	.6494
942	.6915	.5554	.4192	.2831	.1470	.0109	.8748	.7387	.6025	.4664	.1942	.9220	.6497
431945	33.6917	34.5556	35.4195	36.2834	27.1473	38.0112	38.8751	39.7389	40.6028	41.4667	43.1945	44.9223	46.6501
948	.6919	.5558	.4197	.2836	.1475	.0114	.8753	.7392	.6031	.4670	.1948	.9226	.6504
951	.6922	.5561	.4200	.2839	.1478	.0117	.8756	.7395	.6034	.4673	.1951	.9229	.6507
954	.6924	.5563	.4202	.2841	.1480	.0120	.8759	.7398	.6037	.4676	.1954	.9232	.6510
957	.6926	.5566	.4205	.2844	.1483	.0122	.8761	.7400	.6040	.4679	.1957	.9235	.6514
431960	33.6929	34.5568	35.4207	36.2846	37.1486	38.0125	38.8764	39.7403	40.6042	41.4682	43.1960	44.9238	46.6517
963	.6931	.5570	.4210	.2849	.1488	.0127	.8767	.7406	.6045	.4684	.1963	.9242	.6520
966	.6933	.5573	.4212	.2851	.1491	.0130	.8769	.7409	.6048	.4687	.1966	.9245	.6523
969	.6936	.5575	.4215	.2854	.1493	.0133	.8772	.7411	.6051	.4690	.1969	.9248	.6527
972	.6938	.5578	.4217	.2856	.1496	.0135	.8775	.7414	.6054	.4693	.1972	.9251	.6530
431975	33.6941	34.5580	35.4220	36.2859	37.1499	38.0138	38.8778	39.7417	40.6057	41.4696	43.1975	44.9254	46.6533
978	.6943	.5582	.4222	.2862	.1501	.0141	.8780	.7420	.6059	.4699	.1978	.9257	.6536
981	.6945	.5585	.4224	.2864	.1504	.0143	.8783	.7423	.6062	.4702	.1981	.9260	.6539
984	.6948	.5587	.4227	.2867	.1506	.0146	.8786	.7425	.6065	.4705	.1984	.9263	.6543
987	.6950	.5590	.4229	.2869	.1509	.0149	.8788	.7428	.6068	.4708	.1987	.9266	.6546
431990	33.6952	34.5592	35.4332	36.2872	37.1511	38.0151	38.8791	39.7431	40.7071	41.4710	43.1990	44.9270	46.6549
993	.6955	.5594	.4234	.2874	.1514	.0154	.8794	.7434	.6073	.4713	.1993	.9273	.6552
996	.6957	.5597	.4237	.2877	.1517	.0156	.8796	.7436	.6076	.4716	.1996	.9276	.6556
999	.6959	.5599	.4239	.2879	.1519	.0159	.9799	.7439	.6079	.4719	.1999	.9279	.6559
432002	.6962	.5602	.4242	.2882	.1522	.0162	.8802	.7442	.6082	.4722	.2002	.9282	.6562
432005	33.6964	34.5604	35.4244	36.2884	37.1524	38.0164	38.8805	39.7445	40.6085	41.4725	43.2005	44.9285	46.6565
008	.6966	.5606	.4247	.2887	.1527	.0167	.8807	.7447	.6088	.4728	.2008	.9288	.6569
011	.6969	.5609	.4249	.2889	.1529	.0170	.8810	.7450	.6090	.4731	.2011	.9291	.6572
014	.6971	.5611	.4251	.2892	.1532	.0172	.8813	.7453	.6093	.4733	.2014	.9295	.6575
017	.6973	.5614	.4254	.2894	.1535	.0175	.8815	.7456	.6096	.4736	.2017	.9298	.6578
432020	33.6976	34.5616	35.4256	36.2897	37.1537	38.0178	38.8818	39.7458	40.6099	41.4739	43.2020	44.9301	46.6582
023	.6978	.5618	.4259	.2899	.1540	.0180	.8821	.7461	.6102	.4742	.2023	.9304	.6585
026	.6980	.5621	.4261	.2902	.1542	.0183	.8823	.7464	.6104	.4745	.2026	.9307	.6588
029	.6983	.5623	.4264	.2904	.1545	.0186	.8826	.7467	.6107	.4748	.2029	.9310	.6591
032	.6985	.5626	.4266	.2907	.1548	.0188	.8829	.7469	.6110	.4751	.2032	.9313	.6595
432035	33.6987	34.5628	35.4269	36.2909	37.1550	38.0191	38.8832	39.7472	40.6113	41.4754	43.2035	44.9316	46.6598
038	.6990	.5630	.4271	.2912	.1553	.0193	.8834	.7475	.6116	.4756	.2038	.9320	.6601
041	.6992	.5633	.4274	.2914	.1555	.0196	.8837	.7478	.6119	.4759	.2041	.9323	.6604
044	.6994	.5635	.4276	.2917	.1558	.0199	.8840	.7480	.6121	.4762	.2044	.9326	.6608
047	.6997	.5638	.4279	.2919	.1560	.0201	.8842	.7483	.6124	.4765	.2047	.9329	.6611
432050	33.6999	34.5640	35.4281	36.2922	37.1563	38.0204	38.8845	39.7486	40.6127	41.4768	43.2050	44.9332	46.6614
053	.7001	.5642	.4283	.2925	.1566	.0207	.8848	.7489	.6130	.4771	.2053	.9335	.6617
056	.7004	.5645	.4286	.2927	.1568	.0209	.8850	.7492	.6133	.4774	.2056	.9338	.6620
059	.7006	.5647	.4288	.2930	.1571	.0212	.8853	.7494	.6135	.4777	.2059	.9341	.6624
062	.7008	.5650	.4291	.2932	.1573	.0215	.8856	.7497	.6138	.4780	.2062	.9344	.6627
432065	33.7011	34.5652	35.4293	36.2935	37.1576	38.0217	38.8859	39.7500	40.6141	41.4782	43.2065	44.9348	46.6630
068	.7013	.5654	.4296	.2937	.1578	.0220	.8861	.7503	.6144	.4785	.2068	.9351	.6336
071	.7015	.5657	.4298	.2940	.1581	.0222	.8864	.7505	.6147	.4788	.2071	.9354	.6637
074	.7018	.5659	.4301	.2942	.1584	.0225	.8867	.7508	.6150	.4791	.2074	.9357	.6640
077	.7020	.5662	.4303	.2945	.1586	.0228	.8869	.7511	.6152	.4794	.2077	.9360	.6643
432080	33.7022	34.5664	35.4306	36.2947	37.1589	38.0230	38.8872	39.7514	40.6155	41.4797	43.2080	44.9363	46.6646
083	.7025	.5666	.4308	.2950	.1591	.0233	.8875	.7516	.6158	.4800	.2083	.9366	.6650
086	.7027	.5669	.4311	.2952	.1594	.0236	.8877	.7519	.6161	.4803	.2086	.9369	.6653
089	.7029	.5671	.4313	.2955	.1597	.0238	.8880	.7522	.6164	.4805	.2089	.9373	.6656
092	.7032	.5674	.4315	.2957	.1599	.0241	.8883	.7525	.6166	.4808	.2092	.9376	.6659
432095	33.7034	34.5676	35.4318	36.2960	37.1602	38.0244	38.8886	39.7527	40.6169	41.4811	43.2095	44.9379	46.6663
098	.7036	.5678	.4320	.2962	.1604	.0246	.8888	.7530	.6172	.4814	.2098	.9382	.6666
101	.7039	.5681	.4323	.2965	.1607	.0249	.8891	.7533	.6175	.4817	.2101	.9385	.6669
104	.7041	.5683	.4325	.2967	.1609	.0252	.8894	.7536	.6178	.4820	.2104	.9388	.6672
107	.7043	.5686	.4328	.2970	.1612	.0254	.8896	.7538	.6181	.4823	.2107	.9391	.6676
432110	33.7046	34.5688	35.4330	36.2972	37.1615	38.0257	38.8899	39.7541	40.6183	41.4826	43.2110	44.9394	46.6679
113	.7048	.5690	.4333	.2975	.1617	.0259	.8902	.7544	.6186	.4828	.2113	.9398	.6682
116	.7050	.5693	.4335	.2977	.1620	.0262	.8904	.7547	.6189	.4831	.2116	.9401	.6685
119	.7053	.5695	.4338	.2980	.1622	.0265	.8907	.7549	.6192	.4834	.2119	.9404	.6689
122	.7055	.5698	.4340	.2982	.1625	.0267	.8910	.7552	.6195	.4837	.2122	.9407	.6692
432125	33.7058	34.5700	35.4343	36.2985	37.1628	38.0270	38.8913	39.7555	40.6198	41.4840	43.2125	44.9410	46.6695
128	.7060	.5702	.4345	.2988	.1630	.0273	.8915	.7558	.6200	.4843	.2128	.9413	.6698
131	.7062	.5705	.4347	.2990	.1633	.0275	.8918	.7561	.6203	.4846	.2131	.9416	.6701
134	.7065	.5707	.4350	.2993	.1635	.0278	.8921	.7563	.6206	.4849	.2134	.9419	.6705
137	.7067	.5710	.4352	.2995	.1638	.0281	.8923	.7566	.6209	.4852	.2137	.9422	.6708
432140	33.7069	34.5712	35.4355	36.2998	37.1640	38.0283	38.8926	39.7569	40.6212	41.4854	43.2140	44.9426	46.6711
143	.7072	.5714	.4357	.3000	.1643	.0286	.8929	.7572	.6214	.4857	.2143	.9429	.6714
146	.7074	.5717	.4360	.3003	.1646	.0288	.8931	.7574	.6217	.4860	.2146	.9432	.6718
149	.7076	.5719	.4362	.3005	.1648	.0291	.8934	.7577	.6220	.4863	.2149	.9435	.6721
152	.7079	.5722	.4365	.3008	.1651	.0294	.8937	.7580	.6223	.4866	.2152	.9438	.6724
432155	33.7081	34.5724	35.4367	36.3010	37.1653	38.0296	38.8940	39.7583	40.6226	41.4869	43.2155	44.9441	46.6727
158	.7083	.5726	.4370	.3013	.1656	.0299	.8942	.7585	.6229	.4872	.2158	.9444	.6731
161	.7086	.5729	.4372	.3015	.1658	.0302	.8945	.7588	.6231	.4875	.2161	.9447	.6734
164	.7088	.5731	.4374	.3018	.1661	.0304	.8948	.7591	.6234	.4877	.2164	.9451	.6737
167	.7090	.5734	.4377	.3020	.1664	.0307	.8950	.7594	.6237	.4880	.2167	.9454	.6740
432170	33.7093	34.5736	35.4379	36.3023	37.1666	38.0310	38.8953	39.7596	40.6240	41.4883	43.2170	44.9457	46.6744
173	.7095	.5738	.4382	.3025	.1669	.0312	.8956	.7599	.6243	.4886	.2173	.9460	.6747
176	.7097	.5741	.4384	.3028	.1671	.0315	.8958	.7602	.6245	.4889	.2176	.9463	.6750
179	.7100	.5743	.4387	.3030	.1674	.0318	.8961	.7605	.6248	.4892	.2179	.9466	.6753
182	.7102	.5746	.4389	.3033	.1677	.0320	.8964	.7607	.6251	.4895	.2182	.9469	.6757
432185	33.7104	34.5748	35.4392	36.3035	37.1679	38.0323	38.8967	39.7610	40.6254	41.4898	43.2185	44.9472	46.6760
188	.7017	.5750	.4394	.3038	.1682	.0325	.8969	.7613	.6257	.4900	.2188	.9476	.6763
191	.7109	.5753	.4397	.3040	.1684	.0328	.8972	.7616	.6260	.4903	.2191	.9479	.6766
194	.7111	.5755	.4399	.3043	.1687	.0331	.8975	.7618	.6262	.4906	.2194	.9482	.6770
197	.7114	.5758	.4402	.3045	.1689	.0333	.8977	.7621	.6265	.4909	.2197	.9485	.6773
432200	33.7116	34.5760	35.4404	36.3048	37.1692	38.0336	38.8980	39.7624	40.6268	41.4912	43.2200	44.9488	46.6776

MEGACYCLES PER SECOND

H A R M O N I C S

BASIC FREQ.	52	54	56	58	60	62	64	66	68	70	72	74	76
432200	22.4744	23.3388	24.2032	25.0676	25.9320	26.7964	27.6608	28.5252	29.3896	30.2540	31.1184	31.9828	32.8472
203	.4746	.3390	.2034	.0678	.9322	.7966	.6610	.5254	.3898	.2542	.1186	.9830	.8474
206	.4747	.3391	.2035	.0679	.9324	.7968	.6612	.5256	.3900	.2544	.1188	.9832	.8477
209	.4749	.3393	.2037	.0681	.9325	.7970	.6614	.5258	.3902	.2546	.1190	.9835	.8479
212	.4750	.3394	.2039	.0683	.9327	.7971	.6616	.5260	.3904	.2548	.1193	.9837	.8481
432215	22.4752	23.3396	24.2040	25.0685	25.9329	26.7973	27.6618	28.5262	29.3906	30.2551	31.1195	31.9839	32.8483
218	.4753	.3398	.2042	.0686	.9331	.7975	.6620	.5264	.3908	.2553	.1197	.9841	.8486
221	.4755	.3399	.2044	.0688	.9333	.7977	.6621	.5266	.3910	.2555	.1199	.9844	.8488
224	.4756	.3401	.2045	.0690	.9334	.7979	.6623	.5268	.3912	.2557	.1201	.9846	.8490
227	.4758	.3403	.2047	.0692	.9336	.7981	.6625	.5270	.3914	.2559	.1203	.9848	.8493
432230	22.4760	23.3404	24.2049	25.0693	25.9338	26.7983	27.6627	28.5272	29.3916	30.2561	31.1206	31.9850	32.8495
233	.4761	.3406	.2050	.0695	.9340	.7984	.6629	.5274	.3918	.2563	.1208	.9852	.8397
236	.4763	.3407	.2052	.0697	.9342	.7986	.6631	.5276	.3920	.2565	.1210	.9855	.8499
239	.4764	.3409	.2054	.0699	.9343	.7988	.6633	.5278	.3923	.2567	.1212	.9857	.8502
242	.4766	.3411	.2056	.0700	.9345	.7990	.6635	.5280	.3925	.2569	.1214	.9859	.8504
432245	22.4767	23.3412	24.2057	25.0702	25.9347	26.7992	27.6637	28.5282	29.3927	30.2572	31.1216	31.9861	32.8506
248	.4769	.3414	.2059	.0704	.9349	.7994	.6639	.5284	.3929	.2574	.1219	.9864	.8508
251	.4771	.3416	.2061	.0706	.9351	.7996	.6641	.5286	.3931	.2576	.1221	.9866	.8511
254	.4772	.3417	.2062	.0707	.9352	7997	.6643	.5288	.3933	.2578	.1223	.9868	.8513
257	.4774	.3419	.2064	.0709	.9354	.7999	.6644	.5290	.3935	.2580	.1225	.9870	.8515
432260	22.4775	23.3420	24.2066	25.0711	25.9356	26.8001	27.6646	28.5292	29.3937	30.2582	31.1227	31.9872	32.8518
263	.4777	.3422	.2067	.0713	.9358	.8003	.6648	.5294	.3939	.2584	.1229	.9875	.8520
266	.4778	.3424	.2069	.0714	.9360	.8005	.6650	.5296	.3941	.2586	.1232	.9877	.8522
269	.4780	.3425	.2071	.0716	.9361	.8007	.6652	.5298	.3943	.2588	.1234	.9879	.8524
272	.4781	.3427	.2072	.0718	.9363	.8009	.6654	.5300	.3945	.2590	.1236	.9881	.8527
432275	22.4783	23.3429	24.2074	25.0720	25.9365	26.8011	27.6656	28.5302	29.3947	30.2593	31.1238	31.9884	32.8529
278	.4785	.3430	.2076	.0721	.9367	.8012	.6658	.5303	.3949	.2595	.1240	.9886	.8531
281	.4786	.3432	.2077	.0723	.9369	.8014	.6660	.5305	.3951	.2597	.1242	.9888	.8534
284	.4788	.3433	.2079	.0725	.9370	.8016	.6662	.5307	.3953	.2599	.1244	.9890	.8536
287	.4789	.3435	.2081	.0726	.9372	.8018	.6664	.5309	.3955	.2601	.1247	.9892	.8538
432290	22.4791	23.3437	24.2082	25.0728	25.9374	26.8020	27.6666	28.5311	29.3957	30.2603	31.1249	31.9895	32.8540
293	.4792	.3438	.2084	.0730	.9376	.8022	.6668	.5313	.3959	.2605	.1251	.9897	.8543
296	.4794	.3440	.2086	.0732	.9378	.8024	.6669	.5315	.3961	.2607	.1253	.9899	.8545
299	.4795	.3441	.2087	.0743	.9379	.8025	.6671	.5317	.3963	.2609	.1255	.9901	.8547
302	.4797	.3443	.2089	.0735	.9381	.8027	.6673	.5319	.3965	.2611	.1257	.9903	.8550
432305	22.4799	23.3445	24.2091	25.0737	25.9383	26.8029	27.6675	28.5321	29.3967	30.2614	31.1260	31.9906	32.8552
308	.4800	.3446	.2092	.0739	.9385	.8031	.6677	.5323	.3969	.2616	.1262	.9908	.8554
311	.4802	.3448	.2094	.0740	.9387	.8033	.6679	.5325	.3971	.2618	.1264	.9910	.8556
314	.4803	.3450	.2096	.0742	.9388	.8035	.6681	.5327	.3974	.2620	.1266	.9912	.8559
317	.4805	.3451	.2098	.0744	.9390	.8037	.6683	.5329	.3976	.2622	.1268	.9915	.8561
432320	22.4806	23.3453	24.2099	25.0746	25.9392	26.8038	27.6685	28.5331	29.3978	30.2624	31.1270	31.9917	32.8563
323	.4808	.3454	.2101	.0747	.9394	.8040	.6687	.5333	.3980	.2626	.1273	.9919	.8565
326	.4810	.3456	.2103	.0749	.9396	.8042	.6689	.5335	.3982	.2628	.1275	.9921	.8568
329	.4811	.3458	.2104	.0751	.9397	.8044	.6691	.5337	.3984	.2630	.1277	.9923	.8570
332	.4813	.3459	.2106	.0753	.9399	.8046	.6692	.5339	.3986	.2632	.1279	.9926	.8572
432335	22.4814	23.3461	24.2108	25.0754	25.9401	26.8048	27.6694	28.5341	29.3988	30.2635	31.1281	31.9928	32.8575
338	.4816	.3463	.2109	.0756	.9403	.8050	.6696	.5343	.3990	.2637	.1283	.9930	.8577
341	.4817	.3464	.2111	.0758	.9405	.8051	.6698	.5345	.3992	.2639	.1286	.9932	.8579
344	.4819	.3466	.2113	.0760	.9406	.8053	.6700	.5347	.3994	.2641	.1288	.9935	.8581
347	.4820	.3467	.2114	.0761	.9408	.8055	.6702	.5349	.3996	.2643	.1290	.9937	.8584
432350	22.4822	23.3469	24.2116	25.0763	25.9410	26.8057	27.6704	28.5351	29.3998	30.2645	31.1292	31.9939	32.8586
353	.4824	.3471	.2118	.0765	.9412	.8059	.6706	.5353	.4000	.2647	.1294	.9941	.8588
356	.4825	.3472	.2119	.0766	.9414	.8061	.6708	.5355	.4002	.2649	.1296	.9943	.8591
359	.4827	.3474	.2121	.0768	.9415	.8063	.6710	.5357	.4004	.2651	.1298	.9946	.8593
362	.4828	.3475	.2123	.0770	.9417	.8064	.6712	.5359	.4006	.2653	.1301	.9948	.8595
432365	22.4830	23.3477	24.2124	25.0772	25.9419	26.8066	27.6714	28.5361	29.4008	30.2656	31.1303	31.9950	32.8597
368	.4831	.3479	.2126	.0773	.9421	.8068	.6716	.5363	.4010	.2658	.1305	.9952	.8600
371	.4833	.3480	.2128	.0775	.9423	.8070	.6717	.5365	.4012	.2660	.1307	.9955	.8602
374	.4834	.3482	.2129	.0777	.9424	.8072	.6719	.5367	.4014	.2662	.1309	.9957	.8604
377	.4836	.3484	.2131	.0779	.9426	.8074	.6721	.5369	.4016	.2664	.1311	.9959	.8607
432380	22.4838	23.3485	24.2133	25.0780	25.9428	26.8076	27.6723	28.5371	29.4018	30.2666	31.1314	31.9961	32.8609
383	.4839	.3487	.2134	.0782	.9430	.8077	.6725	.5373	.4020	.2668	.1316	.9963	.8611
386	.4841	.3488	.2136	.0784	.9432	.8079	.6727	.5375	.4022	.2670	.1318	.9966	.8613
389	.4842	.3490	.2138	.0786	.9433	.8081	.6729	.5377	.4025	.2672	.1320	.9968	.8616
392	.4844	.3492	.2140	.0787	.9435	.8083	.6731	.5379	.4027	.2674	.1322	.9970	.8618
432395	22.4845	23.3493	24.2141	25.0789	25.9437	25.8085	27.6733	28.5381	29.4029	30.2677	31.1324	31.9972	32.8620
398	.4847	.3495	.2143	.0791	.9439	.8087	.6735	.5383	.4031	.2679	.1327	.9975	.8622
401	.4849	.3497	.2145	.0793	.9441	.8089	.6737	.5385	.4033	.2681	.1329	.9977	.8625
404	.4850	.3498	.2146	.0794	.9442	.8090	.6739	.5387	.4035	.2683	.1331	.9979	.8627
407	.4852	.3500	.2148	.0796	.9444	.9082	.6740	.5389	.4037	.2685	.1333	.9981	.8629
432410	22.4853	23.3501	24.2150	25.0798	25.9446	26.8094	27.6742	28.5391	29.4039	30.2687	31.1335	31.9983	32.8632
413	.4855	.3503	.2151	.0800	.9448	.8096	.6744	.5393	.4041	.2689	.1337	.9986	.8634
416	.4856	.3505	.2153	.0801	.9450	.8098	.6746	.5395	.4043	.2691	.1340	.9988	.8636
419	.4858	.3506	.2155	.0803	.9451	.8100	.6748	.5397	.4045	.2693	.1342	.9990	.8638
422	.4859	.3508	.2156	.0805	.9453	.8102	.6750	.5399	.4047	.2695	.1344	.9992	.8641
432425	22.4861	23.3510	24.2158	25.0807	25.9455	26.8104	27.6752	28.5401	29.4049	30.2698	31.1346	31.9995	32.8643
428	.4863	.3511	.2160	.0808	.9457	.8105	.6754	.5402	.4051	.2700	.1348	.9997	.8645
431	.4864	.3513	.2161	.0810	.9459	.8107	.6756	.5404	.4053	.2702	.1350	.9999	.8648
434	.4866	.3514	.2163	.0812	.9460	.8109	.6758	.5406	.4055	.2704	.1352	32.0001	.8650
437	.4867	.3516	.2165	.0813	.9462	.8111	.6760	.5408	.4057	.2706	.1355	.0003	.8652
432440	22.4869	23.3518	24.2166	25.0815	25.9464	26.8113	27.6762	28.5410	29.4059	30.2708	31.1357	32.0006	32.8654
443	.4870	.3519	.2168	.0817	.9466	.8115	.6764	.5412	.4061	.2710	.1359	.0008	.8657
446	.4872	.3521	.2170	.0819	.9468	.8117	.6765	.5414	.4063	.2712	.1361	.0010	.8659
449	.4873	.3522	.2171	.0820	.9469	.8118	.6767	.5416	.4065	.2714	.1363	.0012	.8661
452	.4875	.3524	.2173	.0822	.9471	.8120	.6769	.5418	.4067	.2716	.1365	.0014	.8664
432455	22.4877	23.3526	24.2175	25.0824	25.9473	26.8122	27.6771	28.5420	29.4069	30.2719	31.1368	32.0017	32.8666
458	.4878	.3527	.2176	.0826	.9475	.8124	.6773	.5422	.4071	.2721	.1370	.0019	.8668
461	.4880	.3529	.2178	.0827	.9477	.8126	.6775	.5424	.4073	.2723	.1372	.0021	.8670
464	.4881	.3531	.2180	.0829	.9478	.8128	.6777	.5426	.4076	.2725	.1374	.0023	.8673
467	.4883	.3532	.2182	.0831	.9480	.8130	.6779	.5428	.4078	.2727	.1376	.0026	.8675
432470	22.4884	23.3534	24.2183	25.0833	25.9482	26.8131	27.6781	28.5430	29.4080	30.2729	31.1378	32.0028	32.8677
473	.4886	.3535	.2185	.0834	.9484	.8133	.6783	.5432	.4082	.2731	.1381	.0030	.8679
476	.4888	.3537	.2187	.0836	.9486	.8135	.6785	.5434	.4084	.2733	.1383	.0032	.8682
479	.4889	.3539	.2188	.0838	.9487	.8137	.6787	.5436	.4086	.2735	.1385	.0034	.8684
482	.4891	.3540	.2190	.0840	.9489	.8139	.6788	.5438	.4088	.2737	.1387	.0037	.8686
432485	22.4892	23.3542	24.2192	25.0841	25.9491	26.8141	27.6790	28.5440	29.4090	30.2740	31.1389	32.0039	32.8689
488	.4894	.3544	.2193	.0843	.9493	.8143	.6792	.5442	.4092	.2742	.1391	.0041	.8691
491	.4895	.3545	.2195	.0845	.9495	.8144	.6794	.5444	.4094	.2744	.1394	.0043	.8693
494	.4897	.3547	.2197	.0847	.9496	.8146	.6796	.5446	.4096	.2746	.1396	.0046	.8695
497	.4898	.3548	.2198	.0848	.9498	.8148	.6798	.5448	.4098	.2748	.1398	.0048	.8698
432500	22.4900	23.3550	24.2200	25.0850	25.9500	26.8150	27.6800	28.5450	29.4100	30.2750	31.1400	32.0050	32.8700

MEGACYCLES PER SECOND

H A R M O N I C S

BASIC FREQ.	78	80	82	84	86	88	90	92	94	96	100	104	108
432200	33.7116	34.5760	35.4404	36.3048	37.1692	38.0336	38.8980	39.7624	40.6268	41.4912	43.2200	44.9488	46.6776
203	.7118	.5762	.4406	.3051	.1695	.0339	.8983	.7627	.6271	.4915	.2203	.9491	.6779
206	.7121	.5765	.4409	.3053	.1697	.0341	.8985	.7630	.6274	.4918	.2206	.9494	.6782
209	.7123	.5767	.4411	.3056	.1700	.0344	.8988	.7632	.6276	.4921	.2209	.9497	.6786
212	.7125	.5770	.4414	.3058	.1702	.0347	.8991	.7635	.6279	.4924	.2212	.9500	.6789
432215	33.7128	34.5772	35.4416	36.3061	37.1705	38.0349	38.8994	39.7638	40.6282	41.4926	43.2215	44.9504	46.6792
218	.7130	.5774	.4419	.3063	.1707	.0352	.8996	.7641	.6285	.4929	.2218	.9507	.6795
221	.7132	.5777	.4421	.3066	.1710	.0354	.8999	.7643	.6288	.4932	.2221	.9510	.6799
224	.7135	.5779	.4424	.3068	.1713	.0357	.9002	.7646	.6291	.4935	.2224	.9513	.6802
227	.7137	.5782	.4426	.3071	.1715	.0360	.9004	.7649	.6293	.4938	.2227	.9516	.6805
432230	33.7139	34.5784	35.4429	36.3073	37.1718	38.0362	38.9007	39.7652	40.6296	41.4941	43.2230	44.9519	46.6808
233	.7142	.5786	.4431	.3076	.1720	.0365	.9010	.7654	.6299	.4944	.2233	.9522	.6812
236	.7144	.5789	.4434	.3078	.1723	.0368	.9012	.7657	.6302	.4947	.2236	.9525	.6815
239	.7146	.5791	.4436	.3081	.1726	.0370	.9015	.7660	.6305	.4949	.2239	.9529	.6818
242	.7149	.5794	.4438	.3083	.1728	.0373	.9018	.7663	.6307	.4952	.2242	.9532	.6821
432245	33.7151	34.5796	35:4441	36.3086	37.1731	38.0376	38.9021	39.7665	40.6310	41.4955	43.2245	44.9535	46.6825
248	.7153	.5798	.4443	.3088	.1733	.0378	.9023	.7668	.6313	.4958	.2248	.9538	.6828
251	.7156	.5801	.4446	.3091	.1736	.0381	.9026	.7671	.6316	.4961	.2251	.9541	.6831
254	.7158	.5803	.4448	.3093	.1738	.0384	.9029	.7674	.6319	.4964	.2254	.9544	.6834
257	.7160	.5806	.4451	.3096	.1741	.0386	.9031	.7676	.6322	.4967	.2257	.9547	.6838
432260	33.7163	34.5808	35.4453	36.3098	37.1744	38.0389	38.9034	39.7679	40.6324	41.4970	43.2260	44.9550	46.6841
263	.7165	.5810	.4456	.3101	.1746	.0391	.9037	.7682	.6327	.4972	.2263	.9554	.6844
266	.7167	.5813	.4458	.3103	.1749	.0394	.9039	.7685	.6330	.4975	.2266	.9557	.6847
269	.7170	.5815	.4461	.3106	.1751	.0397	.9042	.7687	.6333	.4978	.2269	.9560	.6851
272	.7172	.5818	.4463	.3108	.1754	.0399	.9045	.7690	.6336	.4981	.2272	.9563	.6854
432275	33.7175	34.5820	35.4466	36.3111	37.1757	38.0402	38.9048	39.7693	40.6339	41.4984	43.2275	44.9566	46.6857
278	.7177	.5822	.4468	.3114	.1759	.0405	.9050	.7696	.6341	.4987	.2278	.9569	.6860
281	.7179	.5825	.4470	.3116	.1762	.0407	.9053	.7699	.6344	.4990	.2281	.9572	.6863
284	.7182	.5827	.4473	.3119	.1764	.0410	.9056	.7701	.6347	.4993	.2284	.9575	.6867
287	.7184	.5830	.4475	.3121	.1767	.0413	.9058	.7704	.6350	.4996	.2287	.9578	.6870
432290	33.7186	34.5832	35.4478	36.3124	37.1769	38.0415	38.9061	39.7707	40.6353	41.4998	43.2290	44.9582	46.6873
293	.7189	.5834	.4480	.3126	.1772	.0418	.9064	.7710	.6355	.5001	.2293	.9585	.6876
296	.7191	.5837	.4483	.3129	.1775	.0420	.9066	.7712	.6358	.5004	.2296	.9588	.6880
299	.7193	.5839	.4485	.3131	.1777	.0423	.9069	.7715	.6361	.5007	.2299	.9591	.6883
302	.7196	.5842	.4488	.3134	.1780	.0426	.9072	.7718	.6364	.5010	.2302	.9594	.6886
432305	33.7198	34.5844	35.4490	36.3136	37.1782	38.0428	38.9075	39.7721	40.6367	41.5013	43.2305	44.9597	46.6889
308	.7200	.5846	.4493	.3139	.1785	.0431	.9077	.7723	.7370	.5016	.2308	.9600	.6893
311	.7203	.5849	.4495	.3141	.1787	.0434	.9080	.7726	.6372	.5019	.2311	.9603	.6896
314	.7205	.5851	.4497	.3144	.1790	.0436	.9083	.7729	.6375	.5021	.2314	.9607	.6899
317	.7207	.5854	.4500	.3146	.1793	.0439	.9085	.7732	.6378	.5024	.2317	.9610	.6902
432320	33.7210	34.5856	35.4502	36.3149	37.1795	38.0442	38.9088	39.7734	40.6381	41.5027	43.2320	44.9613	46.6906
323	.7212	.5858	.4505	.3151	.1798	.0444	.9091	.7737	.6384	.5030	.2323	.9616	.6909
326	.7214	.5861	.4507	.3154	.1800	.0447	.9093	.7740	.6386	.5033	.2326	.9619	.6912
329	.7217	.5863	.4510	.3156	.1803	.0450	.9096	.7743	.6389	.5036	.2329	.9622	.6915
332	.7219	.5866	.4512	.3159	.1806	.0452	.9099	.7745	.6392	.5039	.2332	.9625	.6919
432335	33.7221	34.5868	35.4515	36.3161	37.1808	38.0455	38.9102	39.7748	40.6395	41.5042	43.2335	44.9628	46.6922
338	.7224	.5870	.4517	.3164	.1811	.0457	.9104	.7751	.6398	.5044	.2338	.9632	.6925
341	.7226	.5873	.4520	.3166	.1813	.0460	.9107	.7754	.6401	.5047	.2341	.9635	.6928
344	.7228	.5875	.4522	.3169	.1816	.0463	.9110	.7756	.6403	.5050	.2344	.9638	.6329
347	.7231	.5878	.4525	.3171	.1818	.0465	.9112	.7759	.6406	.5053	.2347	.9641	.6935
432350	33.7233	34.5880	35.4527	36.3174	37.1821	38.0468	38.9115	39.7762	40.6409	41.5056	43.2350	44.9644	46.6938
353	.7235	.5882	.4529	.3177	.1824	.0471	.9118	.7765	.6412	.5059	.2353	.9647	.6941
356	.7238	.5885	.4532	.3179	.1826	.0473	.9120	.7768	.6415	.5062	.2356	.9650	.9449
359	.7240	.5887	.4534	.3182	.1829	.0476	.9123	.7770	.6417	.5065	.2359	.9653	.6948
362	.7242	.5890	.4537	.3184	.1831	.0479	.9126	.7773	.6420	.5068	.2362	.9656	.6951
432365	33.7245	34.5892	35.4539	36.3187	37.1834	38.0481	38.9129	39.7776	40.6423	41.5070	43.2365	44.9660	46.6954
368	.7247	.5894	.4542	.3189	.1836	.0484	.9131	.7779	.6426	.5073	.2368	.9663	.6957
371	.7249	.5897	.4544	.3192	.1839	.0486	.9134	.7781	.6429	.5076	.2371	.9666	.6961
374	.7252	.5899	.4547	.3194	.1842	.0489	.9137	.7784	.6432	.5079	.2374	.9669	.6964
377	.7254	.5902	.4549	.3197	.1844	.0492	.9139	.7787	.6434	.5082	.2377	.9672	.6967
432380	33.7256	34.5904	35.4552	36.3199	37.1847	38.0494	38.9142	39.7790	40.6437	41.5085	43.2380	44.9675	46.6970
383	.7259	.5906	.4554	.3202	.1849	.0497	.9145	.7792	.6440	.5088	.2383	.9678	.6974
386	.7261	.5909	.4557	.3204	.1852	.0500	.9147	.7795	.6443	.5091	.2386	.9681	.6977
389	.7263	.5911	.4559	.3207	.1855	.0502	.9150	.7798	.6446	.5093	.2389	.9685	.6980
392	.7266	.5914	.4561	.3209	.1857	.0505	.9153	.7801	.6448	.5096	.2392	.9688	.6983
432395	33.7268	34.5916	35.4564	36.3212	37.1860	38.0508	38.9156	39.7803	40.6451	41.5099	43.2395	44.9691	46.6987
398	.7270	.5918	.4566	.3214	.1862	.0510	.9158	.7806	.6454	.5102	.2398	.9694	.6990
401	.7273	.5921	.4569	.3217	.1865	.0513	.9161	.7809	.6457	.5105	.2401	.9697	.6993
404	.7275	.5923	.4571	.3219	.1867	.0516	.9164	.7812	.6460	.5108	.2404	.9700	.6996
407	.7277	.5926	.4574	.3222	.1870	.0518	.9166	.7814	.6463	.5111	.2407	.9703	.7000
432410	33.7280	34.5928	35.4576	36.3224	37.1873	38.0521	38.9169	39.7817	40.6465	41.5114	43.2410	44.9706	46.7003
413	.7282	.5930	.4579	.3227	.1875	.0523	.9172	.7820	.6468	.5116	.2413	.9710	.7006
416	.7284	.5933	.4581	.3229	.1878	.0526	.9174	.7823	.6471	.5119	.2416	.9713	.7009
419	.7287	.5935	.4584	.3232	.1880	.0529	.9177	.7825	.6474	.5122	.2419	.9716	.7013
422	.7289	.5938	.4586	.3234	.1883	.0531	.9180	.7828	.6477	.5125	.2422	.9719	.7016
432425	33.7292	34.5940	35.4589	36.3237	37.1886	38.0534	38.9183	39.7831	40.6480	41.5128	43.2425	44.9722	46.7019
428	.7294	.5942	.4591	.3240	.1888	.0537	.9185	.7834	.6482	.5131	.2428	.9725	.7022
431	.7296	.5945	.4593	.3242	.1891	.0539	.9188	.7837	.6485	.5134	.2431	.9728	.7025
434	.7299	.5947	.4596	.3245	.1893	.0542	.9191	.7839	.6488	.5137	.2434	.9731	.7029
437	.7301	.5950	.4598	.3247	.1896	.0545	.9193	.7842	.6491	.5140	.2437	.9734	.7032
432440	33.7303	34.5952	35.4601	36.3250	37.1898	38.0547	38.9196	39.7845	40.6494	41.5142	43.2440	44.9738	46.7035
443	.7306	.5954	.4603	.3252	.1901	.0550	.9199	.7848	.6496	.5145	.2443	.9741	.7038
446	.7308	.5957	.4606	.3255	.1904	.0552	.9201	.7850	.6499	.5148	.2446	.9744	.7042
449	.7310	.5959	.4608	.3257	.1906	.0555	.9204	.7853	.6502	.5151	.2449	.9747	.7045
452	.7313	.5962	.4611	.3260	.1909	.0558	.9207	.7856	.6505	.5154	.2452	.9750	.7048
432455	33.7315	34.5964	35.4613	36.3262	37.1911	38.0560	38.9210	39.7859	40.6508	41.5157	43.2455	44.9753	46.7051
458	.7317	.5966	.4616	.3265	.1914	.0563	.9212	.7861	.6511	.5160	.2458	.9756	.7055
461	.7320	.5969	.4618	.3267	.1916	.0566	.9215	.7864	.6513	.5163	.2461	.9759	.7058
464	.7322	.5971	.4620	.3270	.1919	.0568	.9218	.7867	.6516	.5165	.2464	.9763	.7061
467	.7324	.5974	.4623	.3272	.1922	.0571	.9220	.7870	.6519	.5168	.2467	.9766	.7064
432470	33.7327	34.5976	35.4625	36.3275	37.1924	38.0574	38.9223	39.7872	40.6522	41.5171	43.2470	44.9769	46.7068
473	.7329	.5978	.4628	.3277	.1927	.0576	.9226	.7875	.6525	.5174	.2473	.9772	.7071
476	.7331	.5981	.4630	.3280	.1929	.0579	.9228	.7878	.6527	.5177	.2476	.9775	.7074
479	.7334	.5983	.4633	.3282	.1932	.0582	.9231	.7881	.6530	.5180	.2479	.9778	.7077
482	.7336	.5986	.4635	.3285	.1935	.0584	.9234	.7883	.6533	.5183	.2482	.9781	.7081
432485	33.7338	34.5988	35.4638	36.3287	37.1937	38.0587	38.9237	39.7886	40.6536	41.5186	43.2485	44.9784	46.7084
488	.7341	.5990	.4640	.3290	.1940	.0589	.9239	.7889	.6539	.5188	.2488	.9788	.7087
491	.7343	.5993	.4643	.3292	.1942	.0592	.9242	.7892	.6542	.5191	.2491	.9791	.7090
494	.7345	.5995	.4645	.3295	.1945	.0595	.9245	.7894	.6544	.5194	.2494	.9794	.7094
497	.7348	.5998	.4648	.3297	.1947	.0597	.9247	.7897	.6547	.5197	.2497	.9797	.7097
432500	33.7350	34.6000	35.4650	36.3300	37.1950	38.0600	38.9250	39.7900	40.6550	41.5200	43.2500	44.9800	46.7100

MEGACYCLES PER SECOND

HARMONICS

BASIC FREQ.	52	54	56	58	60	62	64	66	68	70	72	74	76
432500	22.4900	23.3550	24.2200	25.0850	25.9500	26.8150	27.6800	28.5450	29.4100	30.2750	31.1400	32.0050	32.8700
503	.4902	.3552	.2202	.0852	.9502	.8152	.6802	.5452	.4102	.2752	.1402	.0052	.8702
506	.4903	.3553	.2203	.0853	.9504	.8154	.6804	.5454	.4104	.2754	.1404	.0054	.8705
509	.4905	.3555	.2205	.0855	.9505	.8156	.6806	.5456	.4106	.2756	.1406	.0057	.8707
512	.4906	.3556	.2207	.0857	.9507	.8157	.6808	.5458	.4108	.2758	.1409	.0059	.8709
432515	22.4908	23.3558	24.2208	25.0859	25.9509	26.8159	27.6810	28.5460	29.4110	30.2761	31.1411	32.0061	32.8711
518	.4909	.3560	.2210	.0860	.9511	.8161	.6812	.5462	.4112	.2763	.1413	.0063	.8714
521	.4911	.3561	.2212	.0862	.9513	.8163	.6813	.5464	.4114	.2765	.1415	.0066	.8716
524	.4912	.3563	.2213	.0864	.9514	.8165	.6815	.5466	.4116	.2767	.1417	.0068	.8718
527	.4914	.3565	.2215	.0866	.9516	.8167	.6817	.5468	.4118	.2769	.1419	.0070	.8721
432530	22.4916	23.3566	24.2217	25.0867	25.9518	26.8169	27.6819	28.5470	29.4120	30.2771	31.1422	32.0072	32.8723
533	.4917	.3568	.2218	.0869	.9520	.8170	.6821	.5472	.4122	.2773	.1424	.0074	.8725
536	.4919	.3569	.2220	.0871	.9522	.8172	.6823	.5474	.4124	.2775	.1426	.0077	.8727
539	.4920	.3571	.2222	.0873	.9523	.8174	.6825	.5476	.4127	.2777	.1428	.0079	.8730
542	.4922	.3573	.2224	.0874	.9525	.8176	.6827	.5478	.4129	.2779	.1430	.0081	.8732
432545	22.4923	23.3574	24.2225	25.0876	25.9527	26.8178	27.6829	28.5480	29.4131	30.2782	31.1432	32.0083	32.8734
548	.4925	.3576	.2227	.0878	.9529	.8180	.6831	.5482	.4133	.2784	.1435	.0086	.8736
551	.4927	.3578	.2229	.0880	.9531	.8182	.6833	.5484	.4135	.2786	.1437	.0088	.8739
554	.4928	.3579	.2230	.0881	.9532	.8183	.6835	.5486	.4137	.2788	.1439	.0090	.8741
557	.4930	.3581	2232	.0883	.9534	.8185	.6836	.5488	.4139	.2790	.1441	.0092	.8743
432560	22.4931	23.3582	24.2234	25.0885	25.9536	26.8187	27.6838	28.5490	29.4141	30.2792	31.1443	32.0094	32.8746
563	.4933	.3584	.2235	.0887	.9538	.8189	.6840	.5492	.4143	.2794	.1445	.0097	.8748
566	.4934	.3586	.2237	.0888	.9540	.8191	.6842	.5494	.4145	.2796	.1448	.0099	.8750
569	.4936	.3587	.2239	.0890	.9541	.8193	.6844	.5496	.4147	.2798	.1450	.0101	.8752
572	.4937	.3589	.2240	.0892	.9543	.8195	.6846	.5498	.4149	.2800	.1452	.0103	.8755
432575	22.4939	23.3591	24.2242	25.0894	25.9545	26.8197	27.6848	28.5500	29.4151	30.2803	31.1454	32.0106	32.8757
578	.4941	.3592	.2244	.0895	.9547	.8198	.6850	.5501	.4153	.2805	.1456	.0108	.8759
581	.4942	.3594	.2245	.0897	.9549	.8200	.6852	.5503	.4155	.2807	.1458	.0110	.8762
584	.4944	.3595	.2247	.0899	.9550	.8202	.6854	.5505	.4157	.2809	.1460	.0112	.8764
587	.4945	.3597	.2249	.0900	.9552	.8204	.6856	.5507	.4159	.2811	.1463	.0114	.8766
432590	22.4947	23.3599	24.2250	25.0902	25.9554	26.8206	27.6858	28.5509	29.4161	30.2813	31.1465	32.0117	32.8768
593	.4948	.3600	.2252	.0904	.9556	.8208	.6860	.5511	.4163	.2815	.1467	.0119	.8771
596	.4950	.3602	.2254	.0906	.9558	.8210	.6861	.5513	.4165	.2817	.1469	.0121	.8773
599	.4951	.3603	.2255	.0907	.9559	.8211	.6863	.5515	.4167	.2819	.1471	.0123	.8775
602	.4953	.3605	.2257	.0909	.9561	.8213	.6865	.5517	.4169	.2821	.1473	.0125	.8778
432605	22.4955	23.3607	24.2259	25.0911	25.9563	26.8215	27.6867	28.5519	29.4171	30.2824	31.1476	32.0128	32.8780
608	.4956	.3608	.2260	.0913	.9565	.8217	.6869	.5521	.4173	.2826	.1478	.0130	.8782
611	.4958	.3610	.2262	.0914	.9567	.8219	.6871	.5523	.4175	.2828	.1480	.0132	.8784
614	.4959	.3612	.2264	.0916	.9568	.8221	.6873	.5525	.4178	.2830	.1482	.0134	.8787
617	.4961	.3613	.2266	.0918	.9570	.8223	.6875	.5527	.4180	.2832	.1484	.0137	.8789
432620	22.4962	23.3615	24.2267	25.0920	25.9572	26.8224	27.6877	28.5529	29.4182	30.2834	31.1486	32.0139	32.8791
623	.4964	.3616	.2269	.0921	.9574	.8226	.6879	.5531	.4184	.2836	.1489	.0141	.8793
626	.4966	.3618	.2271	.0923	.9576	.8228	.6881	.5533	.4186	.2838	.1491	.0143	.8796
629	.4967	.3620	.2272	.0925	.9577	.8230	.6883	.5535	.4188	.2840	.1493	.0145	.8798
632	.4969	.3621	.2274	.0927	.9579	.8232	.6884	.5537	.4190	.2842	.1495	.0148	.8800
432635	22.4970	23.3623	24.2276	25.0928	25.9581	26.8234	27.6886	28.5539	29.4192	30.2845	31.1497	32.0150	32.8803
638	.4972	.3625	.2277	.0930	.9583	.8236	.6888	.5541	.4194	.2847	.1499	.0152	.8805
641	.4973	.3626	.2279	.0932	.9585	.8237	.6890	.5543	.4196	.2849	.1502	.0154	.8807
644	.4975	.3628	.2281	.0934	.9586	.8239	.6892	.5545	.4198	.2851	.1504	.0157	.8809
647	.4976	.3629	.2282	.0935	.9588	.8241	.6894	.5547	.4200	.2853	.1506	.0159	.8812
432650	22.4978	23.3631	24.2284	25.0937	25.9590	26.8243	27.6896	28.5549	29.4202	30.2855	31.1508	32.0161	32.8814
653	.4980	.3633	.2286	.0939	.9592	.8245	.6898	.5551	.4204	.2857	.1510	.0163	.8816
656	.4981	.3634	.2287	.0940	.9594	.8247	.6900	.5553	.4206	.2859	.1512	.0165	.8819
659	.4983	.3636	.2289	.0942	.9595	.8249	.6902	.5555	.4208	.2861	.1514	.0168	.8821
662	.4984	.3637	.2291	.0944	.9597	.8250	.6904	.5557	.4210	.2863	.1517	.0170	.8823
432665	22.4986	23.3639	24.2292	25.0946	25.9599	26.8252	27.6906	28.5559	29.4212	30.2866	31.1519	32.0172	32.8825
668	.4987	.3641	.2294	.0947	.9601	.8254	.6908	.5561	.4214	.2868	.1521	.0174	.8828
671	.4989	.3642	.2296	.0949	.9603	.8256	.6909	.5563	.4216	.2870	.1523	.0177	.8830
674	.4990	.3644	.2297	.0951	.9604	.8258	.6911	.5565	.4218	.2872	.1525	.0179	.8832
677	.4992	.3646	.2299	.0953	.9606	.8260	.6913	.5567	.4220	.2874	.1527	.0181	.8835
432680	22.4994	23.3647	24.2301	25.0954	25.9608	26.8262	27.6915	27.5569	29.4222	30.2876	31.1530	32.0183	32.8837
683	.4995	.3649	.2302	.0956	.9610	.8263	.6917	.5571	.4224	.2878	.1532	.0185	.8839
686	.4997	.3650	.2304	.0958	.9612	.8265	.6919	.5573	.4226	.2880	.1534	.0188	.8841
689	.4998	.3652	.2306	.0960	.9613	.8267	.6921	.5575	.4229	.2882	.1536	.0190	.8844
692	.5000	.3654	.2308	.0961	.9615	.8269	.6923	.5577	.4231	.2884	.1538	.0192	.8846
432695	22.5001	23.3655	24.2309	25.0963	25.9617	26.8271	27.6925	28.5579	29.4233	30.2887	31.1540	32.0194	32.8848
698	.5003	.3657	.2311	.0965	.9619	.8273	.6927	.5581	.4235	.2889	.1543	.0197	.8850
701	.5005	.3659	.2313	.0967	.9621	.8275	.6929	.5583	.4237	.2891	.1545	.0199	.8853
704	.5006	.3660	.2314	.0968	.9622	.8276	.6931	.5585	.4239	.2893	.1547	.0201	.8855
707	.5008	.3662	.2316	.0970	.9624	.8278	.6932	.5587	.4241	.2895	.1549	.0203	.8857
432710	22.5009	23.3663	24.2318	25.0972	25.9626	26.8280	27.6934	28.5589	29.4243	30.2897	31.1551	32.0205	32.8860
713	.5011	.3665	.2319	.0974	.9628	.8282	.6936	.5591	.4245	.2899	.1553	.0208	.8862
716	.5012	.3667	.2321	.0975	.9630	.8284	.6938	.5593	.4247	.2901	.1556	.0210	.8864
719	.5014	.3668	.2323	.0977	.9631	.8286	.6940	.5595	.4249	.2903	.1558	.0212	.8866
722	.5015	.3670	.2324	.0979	.9633	.8288	.6942	.5597	.4251	.2905	.1560	.0214	.8869
432725	22.5017	23.3672	24.2326	25.0981	25.9635	26.8290	27.6944	28.5599	29.4253	30.2908	31.1562	32.0217	32.8871
728	.5019	.3673	.2328	.0982	.9637	.8291	.6946	.5600	.4255	.2910	.1564	.0219	.8873
731	.5020	.3675	.2329	.0984	.9639	.8293	.6948	.5602	.4257	.2912	.1566	.0221	.8876
734	.5022	.3676	.2331	.0986	.9640	.8295	.6950	.5604	.4259	.2914	.1568	.0223	.8878
737	.5023	.3678	.2333	.0987	.9642	.8297	.6952	.5606	.4261	.2916	.1571	.0225	.8880
432740	22.5025	23.3680	24.2334	25.0989	25.9644	26.8299	27.6954	28.5608	29.4263	30.2918	31.1573	32.0228	32.8882
743	.5026	.3681	.2336	.0991	.9646	.8301	.6956	.5610	.4265	.2920	.1575	.0230	.8885
746	.5028	.3683	.2338	.0993	.9648	.8303	.6957	.5612	.4267	.2922	.1577	.0232	.8887
749	.5029	.3684	.2339	.0994	.9649	.8304	.6959	.5614	.4269	.2924	.1579	.0234	.8889
752	.5031	.3686	.2341	.0996	.9651	.8306	.6961	.5616	.4271	.2926	.1581	.0236	.8892
432755	22.5033	23.3688	24.2343	25.0998	25.9653	26.8308	27.6963	28.5618	29.4273	30.2929	31.1584	32.0239	32.8894
758	.5034	.3689	.2344	.1000	.9655	.8310	.6965	.5620	.4275	.2931	.1586	.0241	.8896
761	.5036	.3691	.2346	.1001	.9657	.8312	.6967	.5622	.4277	.2933	.1588	.0243	.8898
764	.5037	.3693	.2348	.1003	.9658	.8314	.6969	.5624	.4280	.2935	.1590	.0245	.8901
767	.5039	.3694	.2350	.1005	.9660	.8316	.6971	.5626	.4282	.2937	.1592	.0248	.8903
432770	22.5040	23.3696	24.2351	25.1007	25.9662	26.8317	27.6973	28.5628	29.4284	30.2939	31.1594	32.0250	32.8905
773	.5042	.3697	.2353	.1008	.9664	.8319	.6975	.5630	.4286	.2941	.1597	.0252	.8907
776	.5044	.3699	.2355	.1010	.9666	.8321	.6977	.5632	.4288	.2943	.1599	.0254	.8910
779	.5045	.3701	.2356	.1012	.9667	.8323	.6979	.5634	.4290	.2945	.1601	.0256	.8912
782	.5047	.3702	.2358	.1014	.9669	.8325	.6980	.5636	.4292	.2947	.1603	.0259	.8914
432785	22.5048	23.3704	24.2360	25.1015	25.9671	26.8327	27.6982	28.5638	29.4294	30.2950	31.1605	32.0261	32.8917
788	.5050	.3706	.2361	.1017	.9673	.8329	.6984	.5640	.4296	.2952	.1607	.0263	.8919
791	.5051	.3707	.2363	.1019	.9675	.8330	.6986	.5642	.4298	.2954	.1610	.0265	.8921
794	.5053	.3709	.2365	.1021	.9676	.8332	.6988	.5644	.4300	.2956	.1612	.0268	.8923
797	.5054	.3710	.2366	.1022	.9678	.8334	.6990	.5646	.4302	.2958	.1614	.0270	.8926
432800	22.5056	23.3712	24.2368	25.1024	25.9680	26.8336	27.6992	28.5648	29.4304	30.2960	31.1616	32.0272	32.8928

MEGACYCLES PER SECOND

HARMONICS

BASIC FREQ.	78	80	82	84	86	88	90	92	94	96	100	104	108
432500	33.7350	34.6000	35.4650	36.3300	37.1950	38.0600	38.9250	39.7900	40.6550	41.5200	43.2500	44.9800	46.7100
503	.7352	.6002	.4652	.3303	.1953	.0603	.9253	.7903	.6553	.5203	.2503	.9803	.7103
506	.7355	.6005	.4655	.3305	.1955	.0605	.9255	.7906	.6556	.5206	.2506	.9806	.7106
509	.7357	.6007	.4657	.3308	.1958	.0608	.9258	.7908	.6558	.5209	.2509	.9809	.7110
512	.7359	.6010	.4660	.3310	.1960	.0611	.9261	.7911	.6561	.5212	.2512	.9812	.7113
432515	33.7362	34.6012	35.4662	36.3313	37.1963	38.0613	38.9264	39.7914	40.6564	41.5214	43.2515	44.9816	46.7116
518	.7364	.6014	.4665	.3315	.1965	.0616	.9266	.7917	.6567	.5217	.2518	.9819	.7119
521	.7366	.6017	.4667	.3318	.1968	.0618	.9269	.7919	.6570	.5220	.2521	.9822	.7123
524	.7369	.6019	.4670	.3320	.1971	.0621	.9272	.7922	.6573	.5223	.2524	.9825	.7126
527	.7371	.6022	.4672	.3323	.1973	.0624	.9274	.7925	.6575	.5226	.2527	.9828	.7129
432530	33.7373	34.6024	35.4675	36.3325	37.1976	38.0626	38.9277	39.7928	40.6578	41.5229	43.2530	44.9831	46.7132
533	.7376	.6026	.4677	.3328	.1978	.0629	.9280	.7930	.6581	.5232	.2533	.9834	.7136
536	.7378	.6029	.4680	.3330	.1981	.0632	.9282	.7933	.6584	.5235	.2536	.9837	.7139
539	.7380	.6031	.4682	.3333	.1984	.0634	.9285	.7936	.6587	.5237	.2539	.9841	.7142
542	.7383	.6034	.4684	.3335	.1986	.0637	.9288	.7939	.6589	.5240	.2542	.9844	.7145
432545	33.7385	34.6036	35.4687	36.3338	37.1989	38.0640	38.9291	39.7941	40.6592	41.5243	43.2545	44.9847	46.7149
548	.7387	.6038	.4689	.3340	.1991	.0642	.9293	.7944	.6595	.5246	.2548	.9850	.7152
551	.7390	.6041	.4692	.3343	.1994	.0645	.9296	.7947	.6598	.5249	.2551	.9853	.7155
554	.7392	.6043	.4694	.3345	.1996	.0648	.9299	.7950	.6601	.5252	.2554	.9856	.7158
557	.7394	.6046	.4697	.3348	.1999	.0650	.9301	.7952	.6604	.5255	.2557	.9859	.7162
432560	33.7397	34.6048	35.4699	36.3350	37.2002	38.0653	38.9304	39.7955	40.6606	41.5258	43.2560	44.9862	46.7165
563	.7399	.6050	.4702	.3353	.2004	.0655	.9307	.7958	.6609	.5260	.2563	.9866	.7168
566	.7401	.6053	.4704	.3355	.2007	.0658	.9309	.7961	.6612	.5263	.2566	.9869	.7171
569	.7404	.6055	.4707	.3358	.2009	.0661	.9312	.7963	.6615	.5266	.2569	.9872	.7175
572	.7406	.6058	.4709	.3360	.2012	.0663	.9315	.7966	.6618	.5269	.2572	.9875	.7178
432575	33.7409	34.6060	35.4712	36.3363	37.2015	38.0666	38.9318	39.7969	40.6621	41.5272	43.2575	44.9878	46.7181
578	.7411	.6062	.4714	.3366	.2017	.0669	.9320	.7972	.6623	.5275	.2578	.9881	.7184
581	.7413	.6065	.4716	.3368	.2020	.0671	.9323	.7975	.6626	.5278	.2581	.9884	.7187
584	.7416	.6067	.4719	.3371	.2022	.0674	.9326	.7977	.6629	.5281	.2584	.9887	.7191
587	.7418	.6070	.4721	.3373	.2025	.0677	.9328	.7980	.6632	.5284	.2587	.9890	.7194
432590	33.7420	34.6072	35.4724	36.3376	37.2027	38.0679	38.9331	39.7983	40.6635	41.5286	43.2590	44.9894	46.7197
593	.7423	.6074	.4726	.3378	.2030	.0682	.9334	.7986	.6637	.5289	.2593	.9897	.7200
596	.7425	.6077	.4729	.3381	.2033	.0684	.9336	.7988	.6640	.5292	.2596	.9900	.7204
599	.7427	.6079	.4731	.3383	.2035	.0687	.9339	.7991	.6643	.5295	.2599	.9903	.7207
602	.7430	.6082	.4734	.3386	.2038	.0690	.9342	.7994	.6646	.5298	.2602	.9906	.7210
432605	33.7432	34.6084	35.4736	36.3388	37.2040	38.0692	38.9345	39.7997	40.6649	41.5301	43.2605	44.9909	46.7213
608	.7434	.6086	.4739	.3391	.2043	.0695	.9347	.7999	.6652	.5304	.2608	.9912	.7217
611	.7437	.6089	.4741	.3393	.2045	.0698	.9350	.8002	.6654	.5307	.2611	.9915	.7220
614	.7439	.6091	.4743	.3396	.2048	.0700	.9353	.8005	.6657	.5309	.2614	.9919	.7223
617	.7441	.6094	.4746	.3398	.2051	.0703	.9355	.8008	.6660	.5312	.2617	.9922	.7226
432620	33.7444	34.6096	35.4748	36.3401	37.2053	38.0706	38.9358	39.8010	40.6663	41.5315	43.2620	44.9925	46.7230
623	.7446	.6098	.4751	.3403	.2056	.0708	.9361	.8013	.6666	.5318	.2623	.9928	.7233
626	.7448	.6101	.4753	.3406	.2058	.0711	.9363	.8016	.6668	.5321	.2626	.9931	.7236
629	.7451	.6103	.4756	.3408	.2061	.0714	.9366	.8019	.6671	.5324	.2629	.9934	.7239
632	.7453	.6106	.4758	.3411	.2064	.0716	.9369	.8021	.6674	.5327	.2632	.9937	.7243
432635	33.7455	34.6108	35.4761	36.3413	37.2066	38.0719	38.9372	39.8024	40.6677	41.5330	43.2635	44.9940	46.7246
638	.7458	.6110	.4763	.3416	.2069	.0721	.9374	.8027	.6680	.5332	.2638	.9944	.7249
641	.7460	.6113	.4766	.3418	.2071	.0724	.9377	.8030	.6683	.5335	.2641	.9947	.7252
644	.7462	.6115	.4768	.3421	.2074	.0727	.9380	.8032	.6685	.5338	.2644	.9950	.7256
647	.7465	.6118	.4771	.3423	.2076	.0729	.9382	.8035	.6688	.5341	.2647	.9953	.7259
432650	33.7467	34.6120	35.4773	36.3426	37.2079	38.0732	38.9385	39.8038	40.6691	41.5344	43.2650	44.9956	46.7262
653	.7469	.6122	.4775	.3429	.2082	.0735	.9388	.8041	.6694	.5347	.2653	.9959	.7265
656	.7472	.6125	.4778	.3431	.2084	.0737	.9390	.8044	.6697	.5350	.2656	.9962	.7268
659	.7474	.6127	.4780	.3434	.2087	.0740	.9393	.8046	.6699	.5353	.2659	.9965	.7272
662	.7476	.6130	.4783	.3436	.2089	.0743	.9396	.8049	.6702	.5356	.2662	.9968	.7275
432665	33.7479	34.6132	35.4785	36.3439	37.2092	38.0745	38.9399	39.8052	40.6705	41.5358	43.2665	44.9972	46.7278
668	.7481	.6134	.4788	.3441	.2094	.0748	.9401	.8055	.6708	.5361	.2668	.9975	.7281
671	.7483	.6137	.4790	.3444	.2097	.0750	.9404	.8057	.6711	.5364	.2671	.9978	.7285
674	.7486	.6139	.4793	.3446	.2100	.0753	.9407	.8060	.6714	.5367	.2674	.9981	.7288
677	.7488	.6142	.4795	.3449	.2102	.0756	.9409	.8063	.6716	.5370	.2677	.9984	.7291
432680	33.7490	34.6144	35.4798	36.3451	37.2105	38.0758	38.9412	39.8066	40.6719	41.5373	43.2680	44.9987	46.7294
683	.7493	.6146	.4800	.3454	.2107	.0761	.9415	.8068	.6722	.5376	.2683	.9990	.7298
686	.7495	.6149	.4803	.3456	.2110	.0764	.9417	.8071	.6725	.5379	.2686	.9993	.7301
689	.7497	.6151	.4805	.3459	.2113	.0766	.9420	.8074	.6728	.5381	.2689	.9997	.7304
692	.7500	.6154	.4807	.3461	.2115	.0769	.9423	.8077	.6730	.5384	.2692	45.0000	.7307
432695	33.7502	34.6156	35.4810	36.3464	37.2118	38.0772	38.9426	39.8079	40.6733	41.5387	43.2695	45.0003	46.7311
698	.7504	.6158	.4812	.3466	.2120	.0774	.9428	.8082	.6736	.5390	.2698	.0006	.7314
701	.7507	.6161	.4815	.3469	.2123	.0777	.9431	.8085	.6739	.5393	.2701	.0009	.7317
704	.7509	.6163	.4817	.3471	.2125	.0780	.9434	.8088	.6742	.5396	.2704	.0012	.7320
707	.7511	.6166	.4820	.3474	.2128	.0782	.9436	.8090	.6745	.5399	.2707	.0015	.7324
432710	33.7514	34.6168	35.4822	36.3476	37.2131	38.0785	38.9439	39.8093	40.6747	41.5402	43.2710	45.0018	46.7327
713	.7516	.6170	.4825	.3479	.2133	.0787	.9442	.8096	.6750	.5404	.2713	.0022	.7330
716	.7518	.6173	.4827	.3481	.2136	.0790	.9444	.8099	.6753	.5407	.2716	.0025	.7333
719	.7521	.6175	.4830	.3484	.2138	.0793	.9447	.8101	.6756	.5410	.2719	.0028	.7337
722	.7523	.6178	.4832	.3486	.2141	.0795	.9450	.8104	.6759	.5413	.2722	.0031	.7340
432725	33.7526	34.6180	35.4835	36.3489	37.2144	38.0798	38.9453	39.8107	40.6762	41.5416	43.2725	45.0034	46.7343
728	.7528	.6182	.4837	.3492	.2146	.0801	.9455	.8110	.6764	.5419	.2728	.0037	.7346
731	.7530	.6185	.4839	.3494	.2149	.0803	.9458	.8113	.6767	.5422	.2731	.0040	.7349
734	.7533	.6187	.4842	.3497	.2151	.0806	.9461	.8115	.6770	.5425	.2734	.0043	.7353
737	.7535	.6190	.4844	.3499	.2154	.0809	.9463	.8118	.6773	.5428	.2737	.0046	.7356
432740	33.7537	34.6192	35.4847	36.3502	37.2156	38.0811	38.9466	39.8121	40.6776	41.5430	43.2740	45.0050	46.7359
743	.7540	.6194	.4849	.3504	.2159	.0814	.9469	.8124	.6778	.5433	.2743	.0053	.7362
746	.7542	.6197	.4852	.3507	.2162	.0816	.9471	.8126	.6781	.5436	.2746	.0056	.7366
749	.7544	.6199	.4854	.3509	.2164	.0819	.9474	.8129	.6784	.5439	.2749	.0059	.7369
752	.7547	.6202	.4857	.3512	.2167	.0822	.9477	.8132	.6787	.5442	.2752	.0062	.7372
432755	33.7549	34.6204	35.4859	36.3514	37.2169	38.0824	38.9480	39.8135	40.6790	41.5445	43.2755	45.0065	46.7375
758	.7551	.6206	.4862	.3517	.2172	.0827	.9482	.8137	.6793	.5448	.2758	.0068	.7379
761	.7554	.6209	.4864	.3519	.2174	.0830	.9485	.8140	.6795	.5451	.2761	.0071	.7382
764	.7556	.6211	.4866	.3522	.2177	.0832	.9488	.8143	.6798	.5453	.2764	.0075	.7385
767	.7558	.6214	.4869	.3524	.2180	.0835	.9490	.8146	.6801	.5456	.2767	.0078	.7388
432770	33.7561	34.6216	35.4871	36.3527	37.2182	38.0838	38.9493	39.8148	40.6804	41.5459	43.2770	45.0081	46.7392
773	.7563	.6218	.4874	.3529	.2185	.0840	.9496	.8151	.6807	.5462	.2773	.0084	.7395
776	.7565	.6221	.4876	.3532	.2187	.0843	.9498	.8154	.6809	.5465	.2776	.0087	.7398
779	.7568	.6223	.4879	.3534	.2190	.0846	.9501	.8157	.6812	.5468	.2779	.0090	.7401
782	.7570	.6226	.4881	.3537	.2193	.0848	.9504	.8159	.6815	.5471	.2782	.0093	.7405
432785	33.7572	34.6228	35.4884	36.3539	37.2195	38.0851	38.9507	39.8162	40.6818	41.5474	43.2785	45.0096	46.7408
788	.7575	.6230	.4886	.3542	.2198	.0853	.9509	.8165	.6821	.5476	.2788	.0100	.7411
791	.7577	.6233	.4889	.3544	.2200	.0856	.9512	.8168	.6824	.5479	.2791	.0103	.7414
794	.7579	.6235	.4891	.3547	.2203	.0859	.9515	.8170	.6826	.5482	.2794	.0106	.7418
797	.7582	.6238	.4894	.3549	.2205	.0861	.9517	.8173	.6829	.5485	.2797	.0109	.7421
432800	33.7584	34.6240	35.4896	36.3552	37.2208	38.0864	38.9520	39.8176	40.6832	41.5488	43.2800	45.0112	46.7424

MEGACYCLES PER SECOND

HARMONICS

BASIC FREQ.	52	54	56	58	60	62	64	66	68	70	72	74	76
432800	22.5056	23.3712	24.2368	25.1024	25.9680	26.8336	27.6992	28.5648	29.4304	30.2960	31.1616	32.0272	32.8928
803	.5058	.3714	.2370	.1026	.9682	.8338	.6994	.5650	.4306	.2962	.1618	.0274	.8930
806	.5059	.3715	.2371	.1027	.9684	.8340	.6996	.5652	.4308	.2964	.1620	.0276	.8933
809	.5061	.3717	.2373	.1029	.9685	.8342	.6998	.5654	.4310	.2966	.1622	.0279	.8935
812	.5062	.3718	.2375	.1031	.9687	.8343	.7000	.5656	.4312	.2968	.1625	.0281	.8937
432815	22.5064	23.3720	24.2376	25.1033	25.9689	26.8345	27.7002	28.5658	29.4314	30.2971	31.1627	32.0283	32.8939
818	.5065	.3722	.2378	.1034	.9691	.8347	.7004	.5660	.4316	.2973	.1629	.0285	.8942
821	.5067	.3723	.2380	.1036	.9693	.8349	.7005	.5662	.4318	.2975	.1631	.0288	.8944
824	.5068	.3725	.2381	.1038	.9694	.8351	.7007	.5664	.4320	.2977	.1633	.0290	.8946
827	.5070	.3727	.2383	.1040	.9696	.8353	.7009	.5666	.4322	.2979	.1635	.0292	.8946
432830	22.5072	23.3728	24.2385	25.1041	25.9698	26.8355	27.7011	28.5668	29.4324	30.2981	31.1638	32.0294	32.8951
833	.5073	.3730	.2386	.1043	.9700	.8356	.7013	.5670	.4326	.2983	.1640	.0296	.8953
836	.5075	.3731	.2388	.1045	.9702	.8358	.7015	.5672	.4328	.2985	.1642	.0299	.8955
839	.5076	.3733	.2390	.1047	.9703	.8360	.7017	.5674	.4331	.2987	.1644	.0301	.8958
842	.5078	.3735	.2392	.1048	.9705	.8362	.7019	.5676	.4333	.2989	.1646	.0303	.8960
432845	22.5079	23.3736	24.2393	25.1050	25.9707	26.8364	27.7021	28.5678	29.4335	30.2992	31.1648	32.0305	32.8962
848	.5081	.3738	.2395	.1052	.9709	.8366	.7023	.5680	.4337	.2994	.1651	.0308	.8964
851	.5083	.3740	.2397	.1054	.9711	.8368	.7025	.5682	.4339	.2996	.1653	.0310	.8967
854	.5084	.3741	.2398	.1055	.9712	.8369	.7027	.5684	.4341	.2998	.1655	.0312	.8969
857	.5086	.3743	.2400	.1057	.9714	.8371	.7028	.5686	.4343	.3000	.1657	.0314	.8971
432860	22.5087	23.3744	24.2402	25.1059	25.9716	26.8373	27.7030	28.5688	29.4345	30.3002	31.1659	32.0316	32.8974
863	.5089	.3746	.2403	.1061	.9718	.8375	.7032	.5690	.4347	.3004	.1661	.0319	.8976
866	.5090	.3748	.2405	.1062	.9720	.8377	.7034	.5692	.4349	.3006	.1664	.0321	.8978
869	.5092	.3749	.2407	.1064	.9721	.8379	.7036	.5694	.4351	.3008	.1666	.0323	.8980
872	.5093	.3751	.2408	.1066	.9723	.8381	.7038	.5696	.4353	.3010	.1668	.0325	.8983
432875	22.5095	23.3753	24.2410	25.1068	25.9725	26.8383	27.7040	28.5698	29.4355	30.3013	31.1670	32.0328	32.8985
878	.5097	.3754	.2412	.1069	.9727	.8384	.7042	.5699	.4357	.3015	.1672	.0330	.8987
881	.5098	.3756	.2413	.1071	.9729	.8386	.7044	.5701	.4359	.3017	.1674	.0332	.8990
884	.5100	.3757	.2415	.1073	.9730	.8388	.7046	.5703	.4361	.3019	.1676	.0334	.8992
887	.5101	.3759	.2417	.1074	.9732	.8390	.7048	.5705	.4363	.3021	.1679	.0336	.8994
432890	22.5103	23.3761	24.2418	25.1076	25.9734	26.8392	27.7050	28.5707	29.4365	30.3023	31.1681	32.0339	32.8996
893	.5104	.3762	.2420	.1078	.9736	.8394	.7052	.5709	.4367	.3025	.1683	.0341	.8999
896	.5106	.3764	.2422	.1080	.9738	.8396	.7053	.5711	.4369	.3027	.1685	.0343	.9001
899	.5107	.3765	.2423	.1081	.9739	.8397	.7055	.5713	.4371	.3029	.1687	.0345	.9003
902	.5109	.3767	.2425	.1083	.9741	.8399	.7057	.5715	.4373	.3031	.1689	.0347	.9006
432905	22.5111	23.3769	24.2427	25.1085	25.9743	26.8401	27.7059	28.5717	29.4375	30.3034	31.1692	32.0350	32.9008
908	.5112	.3770	.2428	.1087	.9745	.8403	.7061	.5719	.4377	.3036	.1694	.0352	.9010
911	.5114	.3772	.2430	.1088	.9747	.8405	.7063	.5721	.4379	.3038	.1696	.0354	.9012
914	.5115	.3774	.2432	.1090	.9748	.8407	.7065	.5723	.4382	.3040	.1698	.0356	.9015
917	.5117	.3775	.2434	.1092	.9750	.8409	.7067	.5725	.4384	.3042	.1700	.0359	.9017
432920	22.5118	23.3777	24.2435	25.1094	25.9752	26.8410	27.7069	28.5727	29.4386	30.3044	31.1702	32.0361	32.9019
923	.5120	.3778	.2437	.1095	.9754	.8412	.7071	.5729	.4388	.3046	.1705	.0363	.9021
926	.5122	.3780	.2439	.1097	.9756	.8414	.7073	.5731	.4390	.3048	.1707	.0365	.9024
929	.5123	.3782	.2440	.1099	.9757	.8416	.7075	.5733	.4392	.3050	.1709	.0367	.9026
932	.5125	.3783	.2442	.1101	.9759	.8418	.7076	.5735	.4394	.3052	.1711	.0370	.9028
432935	22.5126	23.3785	24.2444	25.1102	25.9761	26.8420	27.7078	28.5737	29.4396	30.3055	31.1713	32.0372	32.9031
938	.5128	.3787	.2445	.1104	.9763	.8422	.7080	.5739	.4398	.3057	.1715	.0374	.9033
941	.5129	.3788	.2447	.1106	.9765	.8423	.7082	.5741	.4400	.3059	.1718	.0376	.9035
944	.5131	.3790	.2449	.1108	.9766	.8425	.7084	.5743	.4402	.3061	.1720	.0379	.9037
947	.5132	.3791	.2450	.1109	.9768	.8427	.7086	.5745	.4404	.3063	.1722	.0381	.9040
432950	22.5134	23.3793	24.2452	25.1111	25.9770	26.8429	27.7088	28.5747	29.4406	30.3065	31.1724	32.0383	32.9042
953	.5136	.3795	.2454	.1113	.9772	.8431	.7090	.5749	.4408	.3067	.1726	.0385	.9044
956	.5137	.3796	.2455	.1114	.9774	.8433	.7092	.5751	.4410	.3069	.1728	.0387	.9047
959	.5139	.3798	.2457	.1116	.9775	.8435	.7094	.5753	.4412	.3071	.1730	.0390	.9049
962	.5140	.3799	.2459	.1118	.9777	.8436	.7096	.5755	.4414	.3073	.1733	.0392	.9051
432965	22.5142	23.3801	24.2460	25.1120	25.9779	26.8438	27.7098	28.5757	29.4416	30.3076	31.1735	32.0394	32.9053
968	.5143	.3803	.2462	.1121	.9781	.8440	.7100	.5759	.4418	.3078	.1737	.0396	.9056
971	.5145	.3804	.2464	.1123	.9783	.8442	.7101	.5761	.4420	.3080	.1739	.0399	.9058
974	.5146	.3806	.2465	.1125	.9784	.8444	.7103	.5763	.4422	.3082	.1741	.0401	.9060
977	.5148	.3808	.2467	.1127	.9786	.8446	.7105	.5765	.4424	.3084	.1743	.0403	.9063
432980	22.5150	23.3809	24.2469	25.1128	25.9788	26.8448	27.7107	28.5767	29.4426	30.3086	31.1746	32.0405	32.9065
983	.5151	.3811	.2470	.1130	.9790	.8449	.7109	.5769	.4428	.3088	.1748	.0407	.9067
986	.5153	.3812	.2472	.1132	.9792	.8451	.7111	.5771	.4430	.3090	.1750	.0410	.9069
989	.5154	.3814	.2474	.1134	.9793	.8453	.7113	.5773	.4433	.3092	.1752	.0412	.9072
992	.5156	.3816	.2476	.1135	.9795	.8455	.7115	.5775	.4435	.3094	.1754	.0414	.9074
432995	22.5157	23.3817	24.2477	25.1137	25.9797	26.8457	27.7117	28.5777	29.4437	30.3097	31.1756	32.0416	32.9076
998	.5159	.3819	.2479	.1139	.9799	.8459	.7119	.5779	.4439	.3099	.1759	.0419	.9078
433001	.5161	.3821	.2481	.1141	.9801	.8461	.7121	.5781	.4441	.3101	.1761	.0421	.9081
004	.5162	.3822	.2482	.1142	.9802	.8462	.7123	.5783	.4443	.3103	.1763	.0423	.9083
007	.5164	.3824	.2484	.1144	.9804	.8464	.7124	.5785	.4445	.3105	.1765	.0425	.9085
433010	22.5165	23.3825	24.2486	25.1146	25.9806	26.8466	27.7126	28.5787	29.4447	30.3107	31.1767	32.0427	32.9088
013	.5167	.3827	.2487	.1148	.9808	.8468	.7128	.5789	.4449	.3109	.1769	.0430	.9090
016	.5168	.3829	.2489	.1149	.9810	.8470	.7130	.5791	.4451	.3111	.1772	.0432	.9092
019	.5170	.3830	.2491	.1151	.9811	.8472	.7132	.5793	.4453	.3113	.1774	.0434	.9094
022	.5171	.3832	.2492	.1153	.9813	.8474	.7134	.5795	.4455	.3115	.1776	.0436	.9097
433025	22.5173	23.3834	24.2494	25.1155	25.9815	26.8476	27.7136	28.5797	29.4457	30.3118	31.1778	32.0439	32.9099
028	.5175	.3835	.2496	.1156	.9817	.8477	.7138	.5798	.4459	.3120	.1780	.0441	.9101
031	.5176	.3837	.2497	.1158	.9819	.8479	.7140	.5800	.4461	.3122	.1782	.0443	.9104
034	.5178	.3838	.2499	.1160	.9820	.8481	.7142	.5802	.4463	.3124	.1784	.0445	.9106
037	.5179	.3840	.2501	.1161	.9822	.8483	.7144	.5804	.4465	.3126	.1787	.0447	.9108
433040	22.5181	23.3842	24.2502	25.1163	25.9824	26.8485	27.7146	28.5806	29.4467	30.3128	31.1789	32.0450	32.9110
043	.5182	.3843	.2504	.1165	.9826	.8487	.7148	.5808	.4469	.3130	.1791	.0452	.9113
046	.5184	.3845	.2506	.1167	.9828	.8489	.7149	.5810	.4471	.3132	.1793	.0454	.9115
049	.5185	.3846	.2507	.1168	.9829	.8490	.7151	.5812	.4473	.3134	.1795	.0456	.9117
052	.5187	.3838	.2509	.1170	.9831	.8492	.7153	.5814	.4475	.3136	.1797	.0458	.9120
433055	22.5189	23.3850	24.2511	25.1172	25.9833	26.8494	27.7155	28.5816	29.4477	30.3139	31.1800	32.0461	32.9122
058	.5190	.3851	.2512	.1174	.9835	.8496	.7157	.5818	.4479	.3141	.1802	.0463	.9124
061	.5192	.3853	.2514	.1175	.9837	.8498	.7159	.5820	.4481	.3143	.1804	.0465	.9126
064	.5193	.3855	.2516	.1177	.9838	.8500	.7161	.5822	.4484	.3145	.1806	.0467	.9129
067	.5195	.3856	.2518	.1179	.9840	.8502	.7163	.5824	.4486	.3147	.1808	.0470	.9131
433070	22.5196	23.3858	24.2519	25.1181	25.9842	26.8503	27.7165	28.5826	29.4488	30.3149	31.1810	32.0472	32.9133
073	.5198	.3859	.2521	.1182	.9844	.8505	.7167	.5828	.4490	.3151	.1813	.0474	.9135
076	.5200	.3861	.2523	.1184	.9846	.8507	.7169	.5830	.4492	.3153	.1815	.0476	.9138
079	.5201	.3863	.2524	.1186	.9847	.8509	.7171	.5832	.4494	.3155	.1817	.0478	.9140
082	.5203	.3864	.2526	.1188	.9849	.8511	.7172	.5834	.4496	.3157	.1819	.0481	.9142
433085	22.5204	23.3866	24.2528	25.1189	25.9851	26.8513	27.7174	28.5836	29.4498	30.3160	31.1821	32.0483	32.9145
088	.5206	.3868	.2529	.1191	.9853	.8515	.7176	.5838	.4500	.3162	.1823	.0485	.9147
091	.5207	.3869	.2531	.1193	.9855	.8516	.7178	.5840	.4502	.3164	.1826	.0487	.9149
094	.5209	.3871	.2533	.1195	.9856	.8518	.7180	.5842	.4504	.3166	.1828	.0490	.9151
097	.5210	.3872	.2534	.1196	.9858	.8520	.7182	.5844	.4506	.3168	.1830	.0492	.9154
433100	22.5212	23.3874	24.2536	25.1198	25.9860	26.8522	27.7184	28.5846	29.4508	30.3170	31.1832	32.0494	32.9156

MEGACYCLES PER SECOND

H A R M O N I C S

BASIC FREQ.	78	80	82	84	86	88	90	92	94	96	100	104	108
432800	33.7584	34.6240	35.4896	36.3552	37.2208	38.0864	38.9520	39.8176	40.6832	41.5488	43.2800	45.0112	46.7424
803	.7586	.6242	.4898	.3555	.2211	.0867	.9523	.8179	.6835	.5491	.2803	.0115	.7427
806	.7589	.6245	.4901	.3557	.2213	.0869	.9525	.8182	.6838	.5494	.2806	.0118	.7430
809	.7591	.6247	.4903	.3560	.2216	.0872	.9528	.8184	.6840	.5497	.2809	.0121	.7434
812	.7593	.6250	.4906	.3562	.2218	.0875	.9531	.8187	.6843	.5500	.2812	.0124	.7437
432815	33.7596	34.6252	35.4908	36.3565	37.2221	38.0877	38.9534	39.8190	40.6846	41.5502	43.2815	45.0128	46.7440
818	.7598	.6254	.4911	.3567	.2223	.0880	.9536	.8193	.6849	.5505	.2818	.0131	.7443
821	.7600	.6257	.4913	.3570	.2226	.0882	.9539	.8195	.6852	.5508	.2821	.0134	.7447
824	.7603	.6259	.4916	.3572	.2229	.0885	.9542	.8198	.6855	.5511	.2824	.0137	.7450
827	.7605	.6262	.4918	.3575	.2231	.0888	.9544	.8201	.6857	.5514	.2827	.0140	.7453
432830	33.7607	34.6264	35.4921	36.3577	37.2234	38.0890	38.9547	39.8204	40.6860	41.5517	43.2830	45.0143	46.7456
833	.7610	.6266	.4923	.3580	.2236	.0893	.9550	.8206	.6863	.5520	.2833	.0146	.7560
836	.7612	.6269	.4926	.3582	.2239	.0896	.9552	.8209	.6866	.5523	.2836	.0149	.7463
839	.7614	.6271	.4928	.3585	.2242	.0898	.9555	.8212	.6869	.5525	.2839	.0153	.7466
842	.7617	.6274	.4930	.3587	.2244	.0901	.9558	.8215	.6871	.5528	.2842	.0156	.7469
432845	33.7619	34.6276	35.4933	36.3590	37.2247	38.0904	38.9561	39.8217	40.6874	41.5531	43.2845	45.0159	46.7473
848	.7621	.6278	.4935	.3592	.2249	.0906	.9563	.8220	.6877	.5534	.2848	.0162	.7476
851	.7624	.6281	.4938	.3595	.2252	.0909	.9566	.8223	.6880	.5537	.2851	.0165	.7479
854	.7226	.6283	.4940	.3597	.2254	.0912	.9569	.8226	.6883	.5540	.2854	.0168	.7482
857	.7628	.6286	.4943	.3600	.2257	.0914	.9571	.8228	.6886	.5543	.2857	.0171	.7486
432860	33.7631	34.6288	35.4945	36.3602	37.2260	38.0917	38.9574	39.8231	40.6888	41.5546	43.2860	45.0174	46.7489
863	.7633	.6290	.4948	.3605	.2262	.0919	.9577	.8234	.6891	.5548	.2863	.0178	.7492
866	.7635	.6293	.4950	.3607	.2265	.0922	.9579	.8237	.6894	.5551	.2866	.0181	.7495
869	.7638	.6295	.4953	.3610	.2267	.0925	.9582	.8239	.6897	.5554	.2869	.0184	.7499
872	.7640	.6298	.4955	.3612	.2270	.0927	.9585	.8242	.6900	.5557	.2872	.0187	.7502
432875	33.7643	34.6300	35.4958	36.3615	37.2273	38.0930	38.9588	39.8245	40.6903	41.5560	43.2875	45.0190	46.7505
878	.7645	.6302	.4960	.3618	.2275	.0933	.9590	.8248	.6905	.5563	.2878	.0193	.7508
881	.7647	.6305	.4962	.3620	.2278	.0935	.9593	.8251	.6908	.5566	.2881	.0196	.7511
884	.7650	.6307	.4965	.3623	.2280	.0938	.9596	.8253	.6911	.5569	.2884	.0199	.7515
887	.7652	.6310	.4967	.3625	.2283	.0941	.9598	.8256	.6914	.5572	.2887	.0202	.7518
432890	33.7654	34.6312	35.4970	36.3628	37.2285	38.0943	38.9601	39.8259	40.6917	41.5574	43.2890	45.0206	46.7521
893	.7657	.6314	.4972	.3630	.2288	.0946	.9604	.8262	.6919	.5577	.2893	.0209	.7524
896	.7659	.6317	.4975	.3633	.2291	.0948	.9606	.8264	.6922	.5580	.2896	.0212	.7528
899	.7661	.6319	.4977	.3635	.2293	.0951	.9609	.8267	.6925	.5583	.2899	.0215	.7531
902	.7664	.6322	.4980	.3638	.2296	.0954	.9612	.8270	.6928	.5586	.2902	.0218	.7534
432905	33.7666	34.6324	35.4982	36.3640	37.2298	38.0956	38.9615	39.8273	40.6931	41.5589	43.2905	45.0221	46.7537
908	.7668	.6326	.4985	.3643	.2301	.0959	.9617	.8275	.6934	.5592	.2908	.0224	.7541
911	.7671	.6329	.4987	.3645	.2303	.0962	.9620	.8278	.6936	.5595	.2911	.0227	.7544
914	.7673	.6331	.4989	.3648	.2306	.0964	.9623	.8281	.6939	.5597	.2914	.0231	.7547
917	.7675	.6334	.4992	.3650	.2309	.0967	.9625	.8284	.6942	.5600	.2917	.0234	.7550
432920	33.7678	34.6336	35.4994	36.3653	37.2311	38.0970	38.9628	39.8286	40.6945	41.5603	43.2920	45.0237	46.7554
923	.7680	.6338	.4997	.3655	.2314	.0972	.9631	.8289	.6948	.5606	.2923	.0240	.7557
926	.7682	.6341	.4999	.3658	.2316	.0975	.9633	.8292	.6950	.5609	.2926	.0243	.7560
929	.7685	.6343	.5002	.3660	.2319	.0978	.9636	.8295	.6953	.5612	.2929	.0246	.7563
932	.7687	.6346	.5004	.3663	.2322	.0980	.9639	.8297	.6956	.5615	.2932	.0249	.7567
432935	33.7689	34.6348	35.5007	36.3665	37.2324	38.0983	38.9642	39.8300	40.6959	41.5618	43.2935	45.0252	46.7570
938	.7692	.6350	.5009	.3668	.2327	.0985	.9644	.8303	.6962	.5620	.2938	.0256	.7573
941	.7694	.6353	.5012	.3670	.2329	.0988	.9647	.8306	.6965	.5623	.2941	.0259	.7576
944	.7696	.6355	.5014	.3673	.2332	.0991	.9650	.8308	.6967	.5626	.2944	.0262	.7580
947	.7699	.6358	.5017	.3675	.2334	.0993	.9652	.8311	.6970	.5629	.2947	.0265	.7583
432950	33.7701	34.6360	35.5019	36.3678	37.2337	38.0996	38.9655	39.8314	40.6973	41.5632	43.2950	45.0268	46.7586
953	.7703	.6362	.5021	.3681	.2340	.0999	.9658	.8317	.6976	.5635	.2953	.0271	.7589
956	.7706	.6365	.5024	.3683	.2342	.1001	.9660	.8320	.6979	.5638	.2956	.0274	.7592
959	.7708	.6367	.5026	.3686	.2345	.1004	.9663	.8322	.6981	.5641	.2959	.0277	.7596
962	.7710	.6370	.5029	.3688	.2347	.1007	.9666	.8325	.6984	.5644	.2962	.0280	.7599
432965	33.7713	34.6372	35.5031	36.3691	37.2350	38.1009	38.9669	39.8328	40.6987	41.5646	43.2965	45.0284	46.7602
968	.7715	.6374	.5034	.3693	.2352	.1012	.9671	.8331	.6990	.5649	.2968	.0287	.7605
971	.7717	.6377	.5036	.3696	.2355	.1014	.9674	.8333	.6993	.5652	.2971	.0290	.7609
974	.7720	.6379	.5039	.3698	.2358	.1017	.9677	.8336	.6996	.5655	.2974	.0293	.7612
977	.7722	.6382	.5041	.3701	.2360	.1020	.9679	.8339	.6998	.5658	.2977	.0296	.7615
432980	33.7724	34.6384	35.5044	36.3703	37.2363	38.1022	38.9682	39.8342	40.7001	41.5661	43.2980	45.0299	46.7618
983	.7727	.6386	.5046	.3706	.2365	.1025	.9685	.8344	.7004	.5664	.2983	.0302	.7622
986	.7729	.6389	.5049	.3708	.2368	.1028	.9687	.8347	.7007	.5667	.2986	.0305	.7625
989	.7731	.6391	.5051	.3711	.2371	.1030	.9690	.8350	.7010	.5669	.2989	.0309	.7628
992	.7734	.6394	.5053	.3713	.2373	.1033	.9693	.8353	.7012	.5672	.2992	.0312	.7631
432995	33.7736	34.6396	35.5056	36.3716	37.2376	38.1036	38.9696	39.8355	40.7015	41.5675	43.2995	45.0315	46.7635
998	.7738	.6398	.5058	.3718	.2378	.1038	.9698	.8358	.7018	.5678	.2998	.0318	.7638
433001	.7741	.6401	.5061	.3721	.2381	.1041	.9701	.8361	.7021	.5681	.3001	.0321	.7641
004	.7743	.6403	.5063	.3723	.2383	.1044	.9704	.8364	.7024	.5684	.3004	.0324	.7644
007	.7745	.6406	.5066	.3726	.2386	.1046	.9706	.8366	.7027	.5687	.3007	.0327	.7648
433010	33.7748	34.6408	35.5068	36.3728	37.2389	38.1049	38.9709	39.8369	40.7029	41.5690	43.3010	45.0330	46.7651
013	.7750	.6410	.5071	.3731	.2391	.1051	.9712	.8372	.7032	.5692	.3013	.0334	.7654
016	.7752	.6413	.5073	.3733	.2394	.1054	.9714	.8375	.7035	.5695	.3016	.0337	.7657
019	.7755	.6415	.5076	.3736	.2396	.1057	.9717	.8377	.7038	.5698	.3019	.0340	.7661
022	.7757	.6418	.5078	.3738	.2399	.1059	.9720	.8380	.7041	.5701	.3022	.0343	.7664
433025	33.7760	34.6420	35.5081	36.3741	37.2402	38.1062	38.9723	39.8383	40.7044	41.5704	43.3025	45.0346	46.7667
028	.7762	.6422	.5083	.3744	.2404	.1065	.9725	.8386	.7046	.5707	.3028	.0349	.7670
031	.7764	.6425	.5085	.3746	.2407	.1067	.9728	.8389	.7049	.5710	.3031	.0352	.7673
034	.7767	.6427	.5088	.3749	.2409	.1070	.9731	.8391	.7052	.5713	.3034	.0355	.7677
037	.7769	.6430	.5090	.3751	.2412	.1073	.9733	.8394	.7055	.5716	.3037	.0358	.7680
433040	33.7771	34.6432	35.5093	36.3754	37.2414	38.1075	38.9736	39.8397	40.7058	41.5718	43.3040	45.0362	46.7683
043	.7774	.6434	.5095	.3756	.2417	.1078	.9739	.8400	.7060	.5721	.3043	.0365	.7686
046	.7776	.6437	.5098	.3759	.2420	.1080	.9741	.8402	.7063	.5724	.3046	.0368	.7690
049	.7778	.6439	.5100	.3761	.2422	.1083	.9744	.8405	.7066	.5727	.3049	.0371	.7693
052	.7781	.6442	.5103	.3764	.2425	.1086	.9747	.8408	.7069	.5730	.3052	.0374	.7696
433055	33.7783	34.6444	35.5105	36.3766	37.2427	38.1088	38.9750	39.8411	40.7072	41.5733	43.3055	45.0377	46.7699
058	.7785	.6446	.5108	.3769	.2430	.1091	.9752	.8413	.7075	.5736	.3058	.0380	.7703
061	.7788	.6449	.5110	.3771	.2432	.1094	.9755	.8416	.7077	.5739	.3061	.0383	.7706
064	.7790	.6451	.5112	.3774	.2435	.1096	.9758	.8419	.7080	.5741	.3064	.0387	.7709
067	.7792	.6454	.5115	.3776	.2438	.1099	.9760	.8422	.7083	.5744	.3067	.0390	.7712
433070	33.7795	34.6456	35.5117	36.3779	37.2440	38.1102	38.9763	39.8424	40.7086	41.5747	43.3070	45.0393	46.7716
073	.7797	.6458	.5120	.3781	.2443	.1104	.9766	.8427	.7089	.5750	.3073	.0396	.7719
076	.7799	.6461	.5122	.3784	.2445	.1107	.9768	.8430	.7091	.5753	.3076	.0399	.7722
079	.7802	.6463	.5125	.3786	.2448	.1110	.9771	.8433	.7094	.5756	.3079	.0402	.7725
082	.7804	.6466	.5127	.3789	.2451	.1112	.9774	.8435	.7097	.5759	.3082	.0405	.7729
433085	33.7806	34.6468	35.5130	36.3791	37.2453	38.1115	38.9777	39.8438	40.7100	41.5762	43.3085	45.0408	46.7732
088	.7809	.6470	.5132	.3794	.2456	.1117	.9779	.8441	.7103	.5764	.3088	.0412	.7735
091	.7811	.6473	.5135	.3796	.2458	.1120	.9782	.8444	.7106	.5767	.3091	.0415	.7738
094	.7813	.6475	.5137	.3799	.2461	.1123	.9785	.8446	.7108	.5770	.3094	.0418	.7742
097	.7816	.6478	.5140	.3801	.2463	.1125	.9787	.8449	.7111	.5773	.3097	.0421	.7745
433100	33.7818	34.6480	35.5142	36.3804	37.2466	38.1128	38.9790	39.8452	40.7114	41.5776	43.3100	45.0424	46.7748

MEGACYCLES PER SECOND

H A R M O N I C S

BASIC FREQ.	52	54	56	58	60	62	64	66	68	70	72	74	76
433100	22.5212	23.3874	24.2536	25.1198	25.9860	26.8522	27.7184	28.5846	29.4508	30.3170	31.1832	32.0494	32.9156
103	.5214	.3876	.2538	.1200	.9862	.8524	.7186	.5848	.4510	.3172	.1834	.0496	.9158
106	.5215	.3877	.2539	.1201	.9864	.8526	.7188	.5850	.4512	.3174	.1836	.0498	.9161
109	.5217	.3879	.2541	.1203	.9865	.8528	.7190	.5852	.4514	.3176	.1838	.0501	.9163
112	.5218	.3880	.2543	.1205	.9867	.8529	.7192	.5854	.4516	.3178	.1841	.0503	.9165
433115	22.5220	23.3882	24.2544	25.1207	25.9869	26.8531	27.7194	28.5856	29.4518	30.3181	31.1843	32.0505	32.9167
118	.5221	.3884	.2546	.1208	.9871	.8533	.7196	.5858	.4520	.3183	.1845	.0507	.9170
121	.5223	.3885	.2548	.1210	.9873	.8535	.7197	.5860	.4522	.3185	.1847	.0510	.9172
124	.5224	.3887	.2549	.1212	.9874	.8537	.7199	.5862	.4524	.3187	.1849	.0512	.9174
127	.5226	.3889	.2551	.1214	.9876	.8539	.7201	.5864	.4526	.3189	.1851	.0514	.9177
433130	22.5228	23.3890	24.2553	25.1215	25.9878	26.8541	27.7203	28.5866	29.4528	30.3191	31.1854	32.0516	32.9179
133	.5229	.3892	.2554	.1217	.9880	.8542	.7205	.5868	.4530	.3193	.1856	.0518	.9181
136	.5231	.3893	.2556	.1219	.9882	.8544	.7207	.5870	.4532	.3195	.1858	.0521	.9183
139	.5232	.3895	.2558	.1221	.9883	.8546	.7209	.5872	.4535	.3197	.1860	.0523	.9186
142	.5234	.3897	.2560	.1222	.9885	.8548	.7211	.5874	.4537	.3199	.1862	.0525	.9188
433145	22.5235	23.3898	24.2561	25.1224	25.9887	26.8550	27.7213	28.5876	29.4539	30.3202	31.1864	32.0527	32.9190
148	.5237	.3900	.2563	.1226	.9889	.8552	.7215	.5878	.4541	.3204	.1867	.0530	.9192
151	.5239	.3902	.2565	.1228	.9891	.8554	.7217	.5880	.4543	.3206	.1869	.0532	.9195
154	.5240	.3903	.2566	.1229	.9892	.8555	.7219	.5882	.4545	.3208	.1871	.0534	.9197
157	.5242	.3905	.2568	.1231	.9894	.8557	.7220	.5884	.4547	.3210	.1873	.0536	.9199
433160	22.5243	23.3906	24.2570	25.1233	25.9896	26.8559	27.7222	28.5886	29.4549	30.3212	31.1875	32.0538	32.9202
163	.5245	.3908	.2571	.1235	.9898	.8561	.7224	.5888	.4551	.3214	.1877	.0541	.9204
166	.5246	.3910	.2573	.1236	.9900	.8563	.7226	.5890	.4553	.3216	.1880	.0543	.9206
169	.5248	.3911	.2575	.1238	.9901	.8565	.7228	.5892	.4555	.3218	.1882	.0545	.9208
172	.5249	.3913	.2576	.1240	.9903	.8567	.7230	.5894	.4557	.3220	.1884	.0547	.9211
433175	22.5251	23.3915	24.2578	25.1242	25.9905	26.8569	27.7232	28.5896	29.4559	30.3223	31.1886	32.0550	32.9213
178	.5253	.3916	.2580	.1243	.9907	.8570	.7234	.5897	.4561	.3225	.1888	.0552	.9215
181	.5254	.3918	.2581	.1245	.9909	.8572	.7236	.5899	.4563	.3227	.1890	.0554	.9218
184	.5256	.3919	.2583	.1247	.9910	.8574	.7238	.5901	.4565	.3229	.1892	.0556	.9220
187	.5257	.3921	.2585	.1248	.9912	.8576	.7240	.5903	.4567	.3231	.1895	.0558	.9222
433190	22.5259	23.3923	24.2586	25.1250	25.9914	26.8578	27.7242	28.5905	29.4569	30.3233	31.1897	32.0561	32.9224
193	.5260	.3924	.2588	.1252	.9916	.8580	.7244	.5907	.4571	.3235	.1899	.0563	.9227
196	.5262	.3926	.2590	.1254	.9918	.8582	.7245	.5909	.4573	.3237	.1901	.0565	.9229
199	.5263	.3927	.2591	.1255	.9919	.8583	.7247	.5911	.4575	.3239	.1903	.0567	.9231
202	.5265	.3929	.2593	.1257	.9921	.8585	.7249	.5913	.4577	.3241	.1905	.0569	.9234
433205	22.5267	23.3931	24.2595	25.1259	25.9923	26.8587	27.7251	28.5915	29.4579	30.3244	31.1908	32.0572	32.9236
208	.5268	.3932	.2596	.1261	.9925	.8589	.7253	.5917	.4581	.3246	.1910	.0574	.9238
211	.5270	.3934	.2598	.1262	.9927	.8591	.7255	.5919	.4583	.3248	.1912	.0576	.9240
214	.5271	.3936	.2600	.1264	.9928	.8593	.7257	.5921	.4586	.3250	.1914	.0578	.9243
217	.5273	.3937	.2602	.1266	.9930	.8595	.7259	.5923	.4588	.3252	.1916	.0581	.9245
433220	22.5274	23.3939	24.2603	25.1268	25.9932	26.8596	27.7261	28.5925	29.4590	30.3254	31.1918	32.0583	32.9247
223	.5276	.3940	.2605	.1269	.9934	.8598	.7263	.5927	.4592	.3256	.1921	.0585	.9249
226	.5278	.3942	.2607	.1271	.9936	.8600	.7265	.5929	.4594	.3258	.1923	.0587	.9252
229	.5279	.3944	.2608	.1273	.9937	.8602	.7267	.5931	.4596	.3260	.1925	.0589	.9254
232	.5281	.3945	.2610	.1275	.9939	.8604	.7268	.5933	.4598	.3262	.1927	.0592	.9256
433235	22.5282	23.3947	24.2612	25.1276	25.9941	26.8606	27.7270	28.5935	29.4600	30.3265	31.1929	32.0594	32.9259
238	.5284	.3949	.2613	.1278	.9943	.8608	.7272	.5937	.4602	.3267	.1931	.0596	.9261
241	.5285	.3950	.2615	.1280	.9945	.8609	.7274	.5939	.4604	.3269	.1934	.0598	.9263
244	.5287	.3952	.2617	.1282	.9946	.8611	.7276	.5941	.4606	.3271	.1936	.0601	.9265
247	.5288	.3953	.2618	.1283	.9948	.8613	.7278	.5943	.4608	.3273	.1938	.0603	.9268
433250	22.5290	23.3955	24.2620	25.1285	25.9950	26.8615	27.7280	28.5945	29.4610	30.3275	31.1940	32.0605	32.9270
253	.5292	.3957	.2622	.1287	.9952	.8617	.7282	.5947	.4612	.3277	.1942	.0607	.9272
256	.5293	.3958	.2623	.1288	.9954	.8619	.7284	.5949	.4614	.3279	.1944	.0609	.9275
259	.5295	.3960	.2625	.1290	.9955	.8621	.7286	.5951	.4616	.3281	.1946	.0612	.9277
262	.5296	.3961	.2627	.1292	.9957	.8622	.7288	.5953	.4618	.3283	.1949	.0614	.9279
433265	22.5298	23.3963	24.2628	25.1294	25.9959	26.8624	27.7290	28.5955	29.4620	30.3286	31.1951	32.0616	32.9281
268	.5299	.3965	.2630	.1295	.9961	.8626	.7292	.5957	.4622	.3288	.1953	.0618	.9284
271	.5301	.3966	.2632	.1297	.9963	.8628	.7293	.5959	.4624	.3290	.1955	.0621	.9286
274	.5302	.3968	.2633	.1299	.9964	.8630	.7295	.5961	.4626	.3292	.1957	.0623	.9288
277	.5304	.3970	.2635	.1301	.9966	.8632	.7297	.5963	.4628	.3294	.1959	.0625	.9291
433280	22.5306	23.3971	24.2637	25.1302	25.9968	26.8634	27.7299	28.5965	29.4630	30.3296	31.1962	32.0627	32.9293
283	.5307	.3973	.2638	.1304	.9970	.8635	.7301	.5967	.4632	.3298	.1964	.0629	.9295
286	.5309	.3974	.2640	.1306	.9972	.8637	.7303	.5969	.4634	.3300	.1966	.0632	.9297
289	.5310	.3976	.2642	.1308	.9973	.8639	.7305	.5971	.4637	.3302	.1968	.0634	.9300
292	.5312	.3978	.2644	.1309	.9975	.8641	.7307	.5973	.4639	.3304	.1970	.0636	.9302
433295	22.5313	23.3979	24.2645	25.1311	25.9977	26.8643	27.7309	28.5975	29.4641	30.3307	31.1972	32.0638	32.9304
298	.5315	.3981	.2647	.1313	.9979	.8645	.7311	.5977	.4643	.3309	.1975	.0641	.9306
301	.5317	.3983	.2649	.1315	.9981	.8647	.7313	.5979	.4645	.3311	.1977	.0643	.9309
304	.5318	.3984	.2650	.1316	.9982	.8648	.7315	.5981	.4647	.3313	.1979	.0645	.9311
307	.5320	.3986	.2652	.1318	.9984	.8650	.7316	.5983	.4649	.3315	.1981	.0647	.9313
433310	22.5321	23.3987	24.2654	25.1320	25.9986	26.8652	27.7318	28.5985	29.4651	30.3317	31.1983	32.0649	32.9316
313	.5323	.3989	.2655	.1322	.9988	.8654	.7320	.5987	.4653	.3319	.1985	.0652	.9318
316	.5324	.3991	.2657	.1323	.9990	.8656	.7322	.5989	.4655	.3321	.1988	.0654	.9320
319	.5326	.3992	.2659	.1325	.9991	.8658	.7324	.5991	.4657	.3323	.1990	.0656	.9322
322	.5327	.3994	.2660	.1327	.9993	.8660	.7326	.5993	.4659	.3325	.1992	.0658	.9325
433325	22.5329	23.3996	24.2662	25.1329	25.9995	26.8662	27.7328	28.5995	29.4661	30.3328	31.1994	32.0661	32.9327
328	.5331	.3997	.2664	.1330	.9997	.8663	.7330	.5996	.4663	.3330	.1996	.0663	.9329
331	.5332	.3999	.2665	.1332	.9999	.8665	.7332	.5998	.4665	.3332	.1998	.0665	.9332
334	.5334	.4000	.2667	.1334	26.0000	.8667	.7334	.6000	.4667	.3334	.2000	.0667	.9334
337	.5335	.4002	.2669	.1335	.0002	.8669	.7336	.6002	.4669	.3336	.2003	.0669	.9336
433340	22.5337	23.4004	24.2670	25.1337	26.0004	26.8671	27.7338	28.6004	29.4671	30.3338	31.2005	32.0672	32.9338
343	.5338	.4005	.2672	.1339	.0006	.8673	.7340	.6006	.4673	.3340	.2007	.0674	.9341
346	.5340	.4007	.2674	.1341	.0008	.8675	.7341	.6008	.4675	.3342	.2009	.0676	.9343
349	.5341	.4008	.2675	.1342	.0009	.8676	.7343	.6010	.4677	.3344	.2011	.0678	.9345
352	.5343	.4010	.2677	.1344	.0011	.8678	.7345	.6012	.4679	.3346	.2013	.0680	.9348
433355	22.5345	23.4012	24.2679	25.1346	26.0013	26.8680	27.7347	28.6014	29.4681	30.3349	31.2016	32.0683	32.9350
358	.5346	.4013	.2680	.1348	.0015	.8682	.7349	.6016	.4683	.3351	.2018	.0685	.9352
361	.5348	.4015	.2682	.1349	.0017	.8684	.7351	.6018	.4685	.3353	.2020	.0687	.9354
364	.5349	.4017	.2684	.1351	.0018	.8686	.7353	.6020	.4688	.3355	.2022	.0689	.9357
367	.5351	.4018	.2686	.1353	.0020	.8688	.7355	.6022	.4690	.3357	.2024	.0692	.9359
433370	22.5352	23.4020	24.2687	25.1355	26.0022	26.8689	27.7357	28.6024	29.4692	30.3359	31.2026	32.0694	32.9361
373	.5354	.4021	.2689	.1356	.0024	.8691	.7359	.6026	.4694	.3361	.2029	.0696	.9363
376	.5356	.4023	.2691	.1358	.0026	.8693	.7361	.6028	.4696	.3363	.2031	.0698	.9366
379	.5357	.4025	.2692	.1360	.0027	.8695	.7363	.6030	.4698	.3365	.2033	.0700	.9368
382	.5359	.4026	.2694	.1362	.0029	.8697	.7364	.6032	.4700	.3367	.2035	.0703	.9370
433385	22.5360	23.4028	24.2696	25.1363	26.0031	26.8699	27.7366	28.6034	29.4702	30.3370	31.2037	32.0705	32.9373
388	.5362	.4030	.2697	.1365	.0033	.8701	.7368	.6036	.4704	.3372	.2039	.0707	.9375
391	.5363	.4031	.2699	.1367	.0035	.8702	.7370	.6038	.4706	.3374	.2042	.0709	.9377
394	.5365	.4033	.2701	.1369	.0036	.8704	.7372	.6040	.4708	.3376	.2044	.0712	.9379
397	.5366	.4034	.2702	.1370	.0038	.8706	.7374	.6042	.4710	.3378	.2046	.0714	.9382
433400	22.5368	23.4036	24.2704	25.1372	26.0040	26.8708	27.7376	28.6044	29.4712	30.3380	31.2048	32.0716	32.9384

MEGACYCLES PER SECOND

BASIC	HARMONICS												
FREQ.	78	80	82	84	86	88	90	92	94	96	100	104	108
433100	33.7818	34.6480	35.5142	36.3804	37.2466	38.1128	38.9790	39.8452	40.7114	41.5776	43.3100	45.0424	46.7748
103	.7820	.6482	.5144	.3807	.2469	.1131	.9793	.8455	.7117	.5779	.3103	.0427	.7751
106	.7823	.6485	.5147	.3809	.2471	.1133	.9795	.8458	.7120	.5782	.3106	.0430	.7754
109	.7825	.6487	.5149	.3812	.2474	.1136	.9798	.8460	.7122	.5785	.3109	.0433	.7758
112	.7827	.6490	.5152	.3814	.2476	.1139	.9801	.8463	.7125	.5788	.3112	.0436	.7761
433115	33.7830	34.6492	35.5154	36.3817	37.2479	38.1141	38.9804	39.8466	40.7128	41.5790	43.3115	45.0440	46.7764
118	.7832	.6494	.5157	.3819	.2481	.1144	.9806	.8469	.7131	.5793	.3118	.0443	.7767
121	.7834	.6497	.5159	.3822	.2484	.1146	.9809	.8471	.7134	.5796	.3121	.0446	.7771
124	.7837	.6499	.5162	.3824	.2487	.1149	.9812	.8474	.7137	.5799	.3124	.0449	.7774
127	.7839	.6502	.5164	.3827	.2489	.1152	.9814	.8477	.7139	.5802	.3127	.0452	.7777
433130	33.7841	34.6504	35.5167	36.3829	37.2492	38.1154	38.9817	39.8480	40.7142	41.5805	43.3130	45.0455	46.7780
133	.7844	.6506	.5169	.3832	.2494	.1157	.9820	.8482	.7145	.5808	.3133	.0458	.7784
136	.7846	.6509	.5172	.3834	.2497	.1160	.9822	.8485	.7148	.5811	.3136	.0461	.7787
139	.7848	.6511	.5174	.3837	.2500	.1162	.9825	.8488	.7151	.5813	.3139	.0465	.7790
142	.7851	.6514	.5176	.3839	.2502	.1165	.9828	.8491	.7153	.5816	.3142	.0468	.7793
433145	33.7853	34.6516	35.5179	36.3842	37.2505	38.1168	38.9831	39.8493	40.7156	41.5819	43.3145	45.0471	46.7797
148	.7855	.6518	.5181	.3844	.2507	.1170	.9833	.8496	.7159	.5822	.3148	.0474	.7800
151	.7858	.6521	.5184	.3847	.2510	.1173	.9836	.8499	.7162	.5825	.3151	.0477	.7803
154	.7860	.6523	.5186	.3849	.2512	.1176	.9839	.8502	.7165	.5828	.3154	.0480	.7806
157	.7862	.6526	.5189	.3852	.2515	.1178	.9841	.8504	.7168	.5831	.3157	.0483	.7810
433160	33.7865	34.6528	35.5191	36.3854	37.2518	38.1181	38.9844	39.8507	40.7170	41.5834	43.3160	45.0486	46.7813
163	.7867	.6530	.5194	.3857	.2520	.1183	.9847	.8510	.7173	.5836	.3163	.0490	.7816
166	.7869	.6533	.5196	.3859	.2523	.1186	.9849	.8513	.7176	.5839	.3166	.0493	.7819
169	.7872	.6535	.5199	.3862	.2525	.1189	.9852	.8515	.7179	.5842	.3169	.0496	.7823
172	.7874	.6538	.5201	.3864	.2528	.1191	.9855	.8518	.7182	.5845	.3172	.0499	.7826
433175	33.7877	34.6540	35.5204	36.3867	37.2531	38.1194	38.9858	39.8521	40.7185	41.5848	43.3175	45.0502	46.7829
178	.7879	.6542	.5206	.3870	.2533	.1197	.9860	.8524	.7187	.5851	.3178	.0505	.7832
181	.7881	.6545	.5208	.3872	.2536	.1199	.9863	.8527	.7190	.5854	.3181	.0508	.7835
184	.7884	.6547	.5211	.3875	.2538	.1202	.9866	.8529	.7193	.5857	.3184	.0511	.7839
187	.7886	.6550	.5213	.3877	.2541	.1205	.9868	.8532	.7196	.5860	.3187	.0514	.7842
433190	33.7888	34.6552	35.5216	36.3880	37.2543	38.1207	38.9871	39.8535	40.7199	41.5862	43.3190	45.0518	46.7845
193	.7891	.6554	.5218	.3882	.2546	.1210	.9874	.8538	.7201	.5865	.3193	.0521	.7848
196	.7893	.6557	.5221	.3885	.2549	.1212	.9876	.8540	.7204	.5868	.3196	.0524	.7852
199	.7895	.6559	.5223	.3887	.2551	.1215	.9879	.8543	.7207	.5871	.3199	.0527	.7855
202	.7898	.6562	.5226	.3890	.2554	.1218	.9882	.8546	.7210	.5874	.3202	.0530	.7858
433205	33.7900	34.6564	35.5228	36.3892	37.2556	38.1220	38.9885	39.8549	40.7213	41.5877	43.3205	45.0533	46.7861
208	.7902	.6566	.5231	.3895	.2559	.1223	.9887	.8551	.7216	.5880	.3208	.0536	.7865
211	.7905	.6569	.5233	.3897	.2561	.1226	.9890	.8554	.7218	.5883	.3211	.0539	.7868
214	.7907	.6571	.5235	.3900	.2564	.1228	.9893	.8557	.7221	.5885	.3214	.0543	.7871
217	.7909	.6574	.5238	.3902	.2567	.1231	.9895	.8560	.7224	.5888	.3217	.0546	.7874
433220	33.7912	34.6576	35.5240	36.3905	37.2569	38.1234	38.9898	39.8562	40.7227	41.5891	43.3220	45.0549	46.7878
223	.7914	.6578	.5243	.3907	.2572	.1236	.9901	.8565	.7230	.5894	.3223	.0552	.7881
226	.7916	.6581	.5245	.3910	.2574	.1239	.9903	.8568	.7232	.5897	.3226	.0555	.7884
229	.7919	.6583	.5248	.3912	.2577	.1242	.9906	.8571	.7235	.5900	.3229	.0558	.7887
232	.7921	.6586	.5250	.3915	.2580	.1244	.9909	.8573	.7238	.5903	.3232	.0561	.7891
433235	33.7923	34.6588	35.5253	36.3917	37.2582	38.1247	38.9912	39.8576	40.7241	41.5906	43.3235	45.0564	46.7894
238	.7926	.6590	.5255	.3920	.2585	.1249	.9914	.8579	.7244	.5908	.3238	.0568	.7897
241	.7928	.6593	.5258	.3922	.2587	.1252	.9917	.8582	.7247	.5911	.3241	.0571	.7900
244	.7930	.6595	.5260	.3925	.2590	.1255	.9920	.8584	.7249	.5914	.3244	.0574	.7904
247	.7933	.6598	.5263	.3927	.2592	.1257	.9922	.8587	.7252	.5917	.3247	.0577	.7907
433250	33.7935	34.6600	35.5265	36.3930	37.2595	38.1260	38.9925	39.8590	40.7255	41.5920	43.3250	45.0580	46.7910
253	.7937	.6602	.5267	.3933	.2598	.1263	.9928	.8593	.7258	.5923	.3253	.0583	.7913
256	.7940	.6605	.5270	.3935	.2600	.1265	.9930	.8596	.7261	.5926	.3256	.0586	.7916
259	.7942	.6607	.5272	.3938	.2603	.1268	.9933	.8598	.7263	.5929	.3259	.0589	.7920
262	.7944	.6610	.5275	.3940	.2605	.1271	.9936	.8601	.7266	.5932	.3262	.0592	.7923
433265	33.7947	34.6612	35.5277	36.3943	37.2608	38.1273	38.9939	39.8604	40.7269	41.5934	43.3265	45.0596	46.7926
268	.7949	.6614	.5280	.3945	.2610	.1276	.9941	.8607	.7272	.5937	.3268	.0599	.7929
271	.7951	.6617	.5282	.3948	.2613	.1278	.9944	.8609	.7275	.5940	.3271	.0602	.7933
274	.7954	.6619	.5285	.3950	.2616	.1281	.9947	.8612	.7278	.5943	.3274	.0605	.7936
277	.7956	.6622	.5287	.3953	.2618	.1284	.9949	.8615	.7280	.5946	.3277	.0608	.7939
433280	33.7958	34.6624	35.5290	36.3955	37.2621	38.1286	38.9952	39.8618	40.7283	41.5949	43.3280	45.0611	46.7942
283	.7961	.6626	.5292	.3958	.2623	.1289	.9955	.8620	.7286	.5952	.3283	.0614	.7946
286	.7963	.6629	.5295	.3960	.2626	.1292	.9957	.8623	.7289	.5955	.3286	.0617	.7949
289	.7965	.6631	.5297	.3963	.2629	.1294	.9960	.8626	.7292	.5957	.3289	.0621	.7952
292	.7968	.6634	.5299	.3965	.2631	.1297	.9963	.8629	.7294	.5960	.3292	.0624	.7955
433295	33.7970	34.6636	35.5302	36.3968	37.2634	38.1300	38.9966	39.8631	40.7297	41.5963	43.3295	45.0627	46.7959
298	.7972	.6638	.5304	.3970	.2636	.1302	.9968	.8634	.7300	.5966	.3298	.0630	.7962
301	.7975	.6641	.5307	.3973	.2639	.1305	.9971	.8637	.7303	.5969	.3301	.0633	.7965
304	.7977	.6643	.5309	.3975	.2641	.1308	.9974	.8640	.7306	.5972	.3304	.0636	.7968
307	.7979	.6646	.5312	.3978	.2644	.1310	.9976	.8642	.7309	.5975	.3307	.0639	.7972
433310	33.7982	34.6648	35.5314	36.3980	37.2647	38.1313	38.9979	39.8645	40.7311	41.5978	43.3310	45.0642	46.7975
313	.7984	.6650	.5317	.3983	.2649	.1315	.9982	.8648	.7314	.5980	.3313	.0646	.7978
316	.7986	.6653	.5319	.3985	.2652	.1318	.9984	.8651	.7317	.5983	.3316	.0649	.7981
319	.7989	.6655	.5322	.3988	.2654	.1321	.9987	.8653	.7320	.5986	.3319	.0652	.7985
322	.7991	.6658	.5324	.3990	.2657	.1323	.9990	.8656	.7323	.5989	.3322	.0655	.7988
433325	33.7994	34.6660	35.5327	36.3993	37.2660	38.1326	38.9993	39.8659	40.7326	41.5992	43.3325	45.0658	46.7991
328	.7996	.6662	.5329	.3996	.2662	.1329	.9995	.8662	.7328	.5995	.3328	.0661	.7994
331	.7998	.6665	.5331	.3998	.2665	.1331	.9998	.8665	.7331	.5998	.3331	.0664	.7997
334	.8001	.6667	.5334	.4001	.2667	.1334	39.0001	.8667	.7334	.6001	.3334	.0667	.8001
337	.8003	.6670	.5336	.4003	.2670	.1337	.0003	.8670	.7337	.6004	.3337	.0670	.8004
433340	33.8005	34.6672	35.5339	36.4006	37.2672	38.1339	39.0006	39.8673	40.7340	41.6006	43.3340	45.0674	46.8007
343	.8008	.6674	.5341	.4008	.2675	.1342	.0009	.8676	.7342	.6009	.3343	.0677	.8010
346	.8010	.6677	.5344	.4011	.2678	.1344	.0011	.8678	.7345	.6012	.3346	.0680	.8014
349	.8012	.6679	.5346	.4013	.2680	.1347	.0014	.8681	.7348	.6015	.3349	.0683	.8017
352	.8015	.6682	.5349	.4016	.2683	.1350	.0017	.8684	.7351	.6018	.3352	.0686	.8020
433355	33.8017	34.6684	35.5351	36.4018	37.2685	38.1352	39.0020	39.8687	40.7354	41.6021	43.3355	45.0689	46.8023
358	.8019	.6686	.5354	.4021	.2688	.1355	.0022	.8689	.7357	.6024	.3358	.0692	.8027
361	.8022	.6689	.5356	.4023	.2690	.1358	.0025	.8692	.7359	.6027	.3361	.0695	.8030
364	.8024	.6691	.5358	.4026	.2693	.1360	.0028	.8695	.7362	.6029	.3364	.0699	.8033
367	.8026	.6694	.5361	.4028	.2696	.1363	.0030	.8698	.7365	.6032	.3367	.0702	.8036
433370	33.8029	34.6696	35.5363	36.4031	37.2698	38.1366	39.0033	39.8700	40.7368	41.6035	43.3370	45.0705	46.8040
373	.8031	.6698	.5366	.4033	.2701	.1368	.0036	.8703	.7371	.6038	.3373	.0708	.8043
376	.8033	.6701	.5368	.4036	.2703	.1371	.0038	.8706	.7373	.6041	.3376	.0711	.8046
379	.8036	.6703	.5371	.4038	.2706	.1374	.0041	.8709	.7376	.6044	.3379	.0714	.8049
382	.8038	.6706	.5373	.4041	.2709	.1376	.0044	.8711	.7379	.6047	.3382	.0717	.8053
433385	33.8040	34.6708	35.5376	36.4043	37.2711	38.1379	39.0047	39.8714	40.7382	41.6050	43.3385	45.0720	46.8056
388	.8043	.6710	.5378	.4046	.2714	.1381	.0049	.8717	.7385	.6052	.3388	.0724	.8059
391	.8045	.6713	.5381	.4048	.2716	.1384	.0052	.8720	.7388	.6055	.3391	.0727	.8062
394	.8047	.6715	.5383	.4051	.2719	.1387	.0055	.8722	.7390	.6058	.3394	.0730	.8066
397	.8050	.6718	.5386	.4053	.2721	.1389	.0057	.8725	.7393	.6061	.3397	.0733	.8069
433400	33.8052	34.6720	35.5388	36.4056	37.2724	38.1392	39.0060	39.8728	40.7396	41.6064	43.3400	45.0736	46.8072

MEGACYCLES PER SECOND

HARMONICS

BASIC FREQ.	52	54	56	58	60	62	64	66	68	70	72	74	76
433400	22.5368	23.4036	24.2704	25.1372	26.0040	26.8708	27.7376	28.6044	29.4712	30.3380	31.2048	32.0716	32.9384
403	.5370	.4038	.2706	.1374	.0042	.8710	.7378	.6046	.4714	.3382	.2050	.0718	.9386
406	.5371	.4039	.2707	.1375	.0044	.8712	.7380	.6048	.4716	.3384	.2052	.0720	.9389
409	.5373	.4041	.2709	.1377	.0045	.8714	.7382	.6050	.4718	.3386	.2054	.0723	.9391
412	.5374	.4042	.2711	.1379	.0047	.8715	.7384	.6052	.4720	.3388	.2057	.0725	.9393
433415	22.5376	23.4044	24.2712	25.1381	26.0049	26.8717	27.7386	28.6054	29.4722	30.3391	31.2059	32.0727	32.9395
418	.5377	.4046	.2714	.1382	.0051	.8719	.7388	.6056	.4724	.3393	.2061	.0729	.9398
421	.5379	.4047	.2716	.1384	.0053	.8721	.7389	.6058	.4726	.3395	.2063	.0732	.9400
424	.5380	.4049	.2717	.1386	.0054	.8723	.7391	.6060	.4728	.3397	.2065	.0734	.9402
427	.5382	.4051	.2719	.1388	.0056	.8725	.7393	.6062	.4730	.3399	.2067	.0736	.9405
433430	22.5384	23.4052	24.2721	25.1389	26.0058	26.8727	27.7395	28.6064	29.4732	30.3401	31.2070	32.0738	32.9407
433	.5385	.4054	.2722	.1391	.0060	.8728	.7397	.6066	.4734	.3403	.2072	.0740	.9409
436	.5387	.4055	.2724	.1393	.0062	.8730	.7399	.6068	.4736	.3405	.2074	.0743	.9411
439	.5388	.4057	.2726	.1395	.0063	.8732	.7401	.6070	.4739	.3407	.2076	.0745	.9414
442	.5390	.4059	.2728	.1396	.0065	.8734	.7403	.6072	.4741	.3409	.2078	.0747	.9416
433445	22.5391	23.4060	24.2729	25.1398	26.0067	26.8736	27.7405	28.6074	29.4743	30.3412	31.2080	32.0749	32.9418
448	.5393	.4062	.2731	.1400	.0069	.8738	.7407	.6076	.4745	.3414	.2083	.0752	.9420
451	.5395	.4064	.2733	.1402	.0071	.8740	.7409	.6078	.4747	.3416	.2085	.0754	.9423
454	.5396	.4065	.2734	.1403	.0072	.8741	.7411	.6080	.4749	.3418	.2087	.0756	.9425
457	.5398	.4067	.2736	.1405	.0074	.8743	.7412	.6082	.4751	.3420	.2089	.0758	.9427
433460	22.5399	23.4068	24.2738	25.1407	26.0076	26.8745	27.7414	28.6084	29.4753	30.3422	31.2091	32.0760	32.9430
463	.5401	.4070	.2739	.1409	.0078	.8747	.7416	.6086	.4755	.3424	.2093	.0763	.9432
466	.5402	.4072	.2741	.1410	.0080	.8749	.7418	.6088	.4757	.3426	.2096	.0765	.9434
469	.5404	.4073	.2743	.1412	.0081	.8751	.7420	.6090	.4759	.3428	.2098	.0767	.9436
472	.5405	.4075	.2744	.1414	.0083	.8753	.7422	.6092	.4761	.3430	.2100	.0769	.9439
433475	22.5407	23.4077	24.2746	25.1416	26.0085	26.8755	27.7424	28.6094	29.4763	30.3433	31.2102	32.0772	32.9441
478	.5409	.4078	.2748	.1417	.0087	.8756	.7426	.6095	.4765	.3435	.2104	.0774	.9443
481	.5410	.4080	.2749	.1419	.0089	.8758	.7428	.6097	.4767	.3437	.2106	.0776	.9446
484	.5412	.4081	.2751	.1421	.0090	.8760	.7430	.6099	.4769	.3439	.2108	.0778	.9448
487	.5413	.4083	.2753	.1422	.0092	.8762	.7432	.6101	.4771	.3441	.2111	.0780	.9450
433490	22.5415	23.4085	24.2754	25.1424	26.0094	26.8764	27.7434	28.6103	29.4773	30.3443	31.2113	32.0783	32.9452
493	.5416	.4086	.2756	.1426	.0096	.8766	.7436	.6105	.4775	.3445	.2115	.0785	.9455
496	.5418	.4088	.2758	.1428	.0098	.8768	.7437	.6107	.4777	.3447	.2117	.0787	.9457
499	.5419	.4089	.2759	.1429	.0099	.8769	.7439	.6109	.4779	.3449	.2119	.0789	.9459
502	.5421	.4091	.2761	.1431	.0101	.8771	.7441	.6111	.4781	.3451	.2121	.0791	.9462
433505	22.5423	23.4093	24.2763	25.1433	26.0103	26.8773	27.7443	28.6113	29.4783	30.3454	31.2124	32.0794	32.9464
508	.5424	.4094	.2764	.1435	.0105	.8775	.7445	.6115	.4785	.3456	.2126	.0796	.9466
511	.5426	.4096	.2766	.1436	.0107	.8777	.7447	.6117	.4787	.3458	.2128	.0798	.9468
514	.5427	.4098	.2768	.1438	.0108	.8779	.7449	.6119	.4790	.3460	.2130	.0800	.9471
517	.5429	.4099	.2770	.1440	.0110	.8781	.7451	.6121	.4792	.3462	.2132	.0803	.9473
433520	22.5430	23.4101	24.2771	25.1442	26.0112	26.8782	27.7453	28.6123	29.4794	30.3464	31.2134	32.0805	32.9475
523	.5432	.4102	.2773	.1443	.0114	.8784	.7455	.6125	.4796	.3466	.2137	.0807	.9477
526	.5434	.4104	.2775	.1445	.0116	.8786	.7457	.6127	.4798	.3468	.2139	.0809	.9480
529	.5435	.4106	.2776	.1447	.0117	.8788	.7459	.6129	.4800	.3470	.2141	.0811	.9482
532	.5437	.4107	.2778	.1449	.0119	.8790	.7460	.6131	.4802	.3472	.2143	.0814	.9484
433535	22.5438	23.4109	24.2780	25.1450	26.0121	26.8792	27.7462	28.6133	29.4804	30.3475	31.2145	32.0816	32.9487
538	.5440	.4111	.2781	.1452	.0123	.8794	.7464	.6135	.4806	.3477	.2147	.0818	.9489
541	.5441	.4112	.2783	.1454	.0125	.8795	.7466	.6137	.4808	.3479	.2150	.0820	.9491
544	.5443	.4114	.2785	.1456	.0126	.8797	.7468	.6139	.4810	.3481	.2152	.0823	.9493
547	.5444	.4115	.2786	.1457	.0128	.8799	.7470	.6141	.4812	.3483	.2154	.0825	.9496
433550	22.5446	23.4117	24.2788	25.1459	26.0130	26.8801	27.7472	28.6143	29.4814	30.3485	31.2156	32.0827	32.9498
553	.5448	.4119	.2790	.1461	.0132	.8803	.7474	.6145	.4816	.3487	.2158	.0829	.9500
556	.5449	.4120	.2791	.1462	.0134	.8805	.7476	.6147	.4818	.3489	.2160	.0831	.9503
559	.5451	.4122	.2793	.1464	.0135	.8807	.7478	.6149	.4820	.3491	.2162	.0834	.9505
562	.5452	.4123	.2795	.1466	.0137	.8808	.7480	.6151	.4822	.3493	.2165	.0836	.9507
433565	22.5454	23.4125	24.2796	25.1468	26.0139	26.8810	27.7482	28.6153	29.4824	30.3496	31.2167	32.0838	32.9509
568	.5455	.4127	.2798	.1469	.0141	.8812	.7484	.6155	.4826	.3498	.2169	.0840	.9512
571	.5457	.4128	.2800	.1471	.0143	.8814	.7485	.6157	.4828	.3500	.2171	.0843	.9514
574	.5458	.4130	.2801	.1473	.0144	.8816	.7487	.6159	.4830	.3502	.2173	.0845	.9516
577	.5460	.4132	.2803	.1475	.0146	.8818	.7489	.6161	.4832	.3504	.2175	.0847	.9519
433580	22.5462	23.4133	24.2805	25.1476	26.0148	26.8820	27.7491	28.6163	29.4834	30.3506	31.2178	32.0849	32.9521
583	.5463	.4135	.2806	.1478	.0150	.8821	.7493	.6165	.4836	.3508	.2180	.0851	.9523
586	.5465	.4136	.2808	.1480	.0152	.8823	.7495	.6167	.4838	.3510	.2182	.0854	.9525
589	.5466	.4138	.2810	.1482	.0153	.8825	.7497	.6169	.4841	.3512	.2184	.0856	.9528
592	.5468	.4140	.2812	.1483	.0155	.8827	.7499	.6171	.4843	.3514	.2186	.0858	.9530
433595	22.5469	23.4141	24.2813	25.1485	26.0157	26.8829	27.7501	28.6173	29.4845	30.3517	31.2188	32.0860	32.9532
598	.5471	.4143	.2815	.1487	.0159	.8831	.7503	.6175	.4847	.3519	.2191	.0863	.9534
601	.5473	.4145	.2817	.1489	.0161	.8833	.7505	.6177	.4849	.3521	.2193	.0865	.9537
604	.5474	.4146	.2818	.1490	.0162	.8834	.7507	.6179	.4851	.3523	.2195	.0867	.9539
607	.5476	.4148	.2820	.1492	.0164	.8836	.7508	.6181	.4853	.3525	.2197	.0869	.9541
433610	22.5477	23.4149	24.2822	25.1494	26.0166	26.8838	27.7510	28.6183	29.4855	30.3527	31.2199	32.0871	32.9544
613	.5479	.4151	.2823	.1496	.0168	.8840	.7512	.6185	.4857	.3529	.2201	.0874	.9546
616	.5480	.4153	.2825	.1497	.0170	.8842	.7514	.6187	.4859	.3531	.2204	.0876	.9548
619	.5482	.4154	.2827	.1499	.0171	.8844	.7516	.6189	.4861	.3533	.2206	.0878	.9550
622	.5483	.4156	.2828	.1501	.0173	.8846	.7518	.6191	.4863	.3535	.2208	.0880	.9553
433625	22.5485	23.4158	24.2830	25.1503	26.0175	26.8848	27.7520	28.6193	29.4865	30.3538	31.2210	32.0883	32.9555
628	.5487	.4159	.2832	.1504	.0177	.8849	.7522	.6194	.4867	.3540	.2212	.0885	.9557
631	.5488	.4161	.2833	.1506	.0179	.8851	.7524	.6196	.4869	.3542	.2214	.0887	.9560
634	.5490	.4162	.2835	.1508	.0180	.8853	.7526	.6198	.4871	.3544	.2216	.0889	.9562
637	.5491	.4164	.2837	.1509	.0182	.8855	.7528	.6200	.4873	.3546	.2219	.0891	.9564
433640	22.5493	23.4166	24.2838	25.1511	26.0184	26.8857	27.7530	28.6202	29.4875	30.3548	31.2221	32.0894	32.9566
643	.5494	.4167	.2840	.1513	.0186	.8859	.7532	.6204	.4877	.3550	.2223	.0896	.9569
646	.5496	.4169	.2842	.1515	.0188	.8861	.7533	.6206	.4879	.3552	.2225	.0898	.9571
649	.5497	.4170	.2843	.1516	.0189	.8862	.7535	.6208	.4881	.3554	.2227	.0900	.9573
652	.5499	.4172	.2845	.1518	.0191	.8864	.7537	.6210	.4883	.3556	.2229	.0902	.9576
433655	22.5501	23.4174	24.2847	25.1520	26.0193	26.8866	27.7539	28.6212	29.4885	30.3559	31.2232	32.0905	32.9578
658	.5502	.4175	.2848	.1522	.0195	.8868	.7541	.6214	.4887	.3561	.2234	.0907	.9580
661	.5504	.4177	.2850	.1523	.0197	.8870	.7543	.6216	.4889	.3563	.2236	.0909	.9582
664	.5505	.4179	.2852	.1525	.0198	.8872	.7545	.6218	.4892	.3565	.2238	.0911	.9585
667	.5507	.4180	.2854	.1527	.0200	.8874	.7547	.6220	.4894	.3567	.2240	.0914	.9587
433670	22.5508	23.4182	24.2855	25.1529	26.0202	26.8875	27.7549	28.6222	29.4896	30.3569	31.2242	32.0916	32.9589
673	.5510	.4183	.2857	.1530	.0204	.8877	.7551	.6224	.4898	.3571	.2245	.0918	.9591
676	.5512	.4185	.2859	.1532	.0206	.8879	.7553	.6226	.4900	.3573	.2247	.0920	.9594
679	.5513	.4187	.2860	.1534	.0207	.8881	.7555	.6228	.4902	.3575	.2249	.0922	.9596
682	.5515	.4188	.2862	.1536	.0209	.8883	.7556	.6230	.4904	.3577	.2251	.0925	.9598
433685	22.5516	23.4190	24.2864	25.1537	26.0211	26.8885	27.7558	28.6232	29.4906	30.3580	31.2253	32.0927	32.9601
688	.5518	.4192	.2865	.1539	.0213	.8887	.7560	.6234	.4908	.3582	.2255	.0929	.9603
691	.5519	.4193	.2867	.1541	.0215	.8888	.7562	.6236	.4910	.3584	.2258	.0931	.9605
694	.5521	.4195	.2869	.1543	.0216	.8890	.7564	.6238	.4912	.3586	.2260	.0934	.9606
697	.5522	.4196	.2870	.1544	.0218	.8892	.7566	.6240	.4914	.3588	.2262	.0936	.9610
433700	22.5524	23.4198	24.2872	25.1546	26.0220	26.8894	27.7568	28.6242	29.4916	30.3590	31.2264	32.0938	32.9612

MEGACYCLES PER SECOND

BASIC FREQ.	78	80	82	84	86	88	90	92	94	96	100	104	108
433400	33.8052	34.6720	35.5388	36.4056	37.2724	38.1392	39.0060	39.8728	40.7396	41.6064	43.3400	45.0736	46.8072
403	.8054	.6722	.5390	.4059	.2727	.1395	.0063	.8731	.7399	.6067	.3403	.0739	.8075
406	.8057	.6725	.5393	.4061	.2729	.1397	.0065	.8734	.7402	.6070	.3406	.0742	.8078
409	.8059	.6727	.5395	.4064	.2732	.1400	.0068	.8736	.7404	.6073	.3409	.0745	.8082
412	.8061	.6730	.5398	.4066	.2734	.1403	.0071	.8739	.7407	.6076	.3412	.0748	.8085
433415	33.8064	34.6732	35.5400	36.4069	37.2737	38.1405	39.0074	39.8742	40.7410	41.6078	43.3415	45.0752	46.8088
418	.8066	.6734	.5403	.4071	.2739	.1408	.0076	.8745	.7413	.6081	.3418	.0755	.8091
421	.8068	.6737	.5405	.4074	.2742	.1410	.0079	.8747	.7416	.6084	.3421	.0758	.8095
424	.8071	.6739	.5408	.4076	.2745	.1413	.0082	.8750	.7419	.6087	.3424	.0761	.8098
427	.8073	.6742	.5410	.4079	.2747	.1416	.0084	.8753	.7421	.6090	.3427	.0764	.8101
433430	33.8075	34.6744	35.5413	36.4081	37.2750	38.1418	39.0087	39.8756	40.7424	41.6093	43.3430	45.0767	46.8104
433	.8078	.6746	.5415	.4084	.2752	.1421	.0090	.8758	.7427	.6096	.3433	.0770	.8108
436	.8080	.6749	.5418	.4086	.2755	.1424	.0092	.8761	.7430	.6099	.3436	.0773	.8111
439	.8082	.6751	.5420	.4089	.2758	.1426	.0095	.8764	.7433	.6101	.3439	.0777	.8114
442	.8085	.6754	.5422	.4091	.2760	.1429	.0098	.8767	.7435	.6104	.3442	.0780	.8117
433445	33.8087	34.6756	35.5425	36.4094	37.2763	38.1432	39.0101	39.8769	40.7438	41.6107	43.3445	45.0783	46.8121
448	.8089	.6758	.5427	.4096	.2765	.1434	.0103	.8772	.7441	.6110	.3448	.0786	.8124
451	.8092	.6761	.5430	.4099	.2768	.1437	.0106	.8775	.7444	.6113	.3451	.0789	.8127
454	.8094	.6763	.5432	.4101	.2770	.1440	.0109	.8778	.7447	.6116	.3454	.0792	.8130
457	.8096	.6766	.5435	.4104	.2773	.1442	.0111	.8780	.7450	.6119	.3457	.0795	.8134
433460	33.8099	34.6768	35.5437	36.4106	37.2776	38.1445	39.0114	39.8783	40.7452	41.6122	43.3460	45.0798	46.8137
463	.8101	.6770	.5440	.4109	.2778	.1447	.0117	.8786	.7455	.6124	.3463	.0802	.8140
466	.8103	.6773	.5442	.4111	.2781	.1450	.0119	.8789	.7458	.6127	.3466	.0805	.8143
469	.8106	.6775	.5445	.4114	.2783	.1453	.0122	.8791	.7461	.6130	.3469	.0808	.8147
472	.8108	.6778	.5447	.4116	.2786	.1455	.0125	.8794	.7464	.6133	.3472	.0811	.8150
433475	33.8111	34.6780	35.5450	36.4119	37.2789	38.1458	39.0128	39.8797	40.7467	41.6136	43.3475	45.0814	46.8153
478	.8113	.6782	.5452	.4122	.2791	.1461	.0130	.8800	.7469	.6139	.3478	.0817	.8156
481	.8115	.6785	.5454	.4124	.2794	.1463	.0133	.8803	.7472	.6142	.3481	.0820	.8159
484	.8118	.6787	.5457	.4127	.2796	.1466	.0136	.8805	.7475	.6145	.3484	.0823	.8163
487	.8120	.6790	.5459	.4129	.2799	.1469	.0138	.8808	.7478	.6148	.3487	.0826	.8166
433490	33.8122	34.6792	35.5462	36.4132	37.2801	38.1471	39.0141	39.8811	40.7481	41.6150	43.3490	45.0830	46.8169
493	.8125	.6794	.5464	.4134	.2804	.1474	.0144	.8814	.7483	.6153	.3493	.0833	.8172
496	.8127	.6797	.5467	.4137	.2807	.1476	.0146	.8816	.7486	.6156	.3496	.0836	.8176
499	.8129	.6799	.5469	.4139	.2809	.1479	.0149	.8819	.7489	.6159	.3499	.0839	.8179
502	.8132	.6802	.5472	.4142	.2812	.1482	.0152	.8822	.7492	.6162	.3502	.0842	.8182
433505	33.8134	34.6804	35.5474	36.4144	37.2814	38.1484	39.0155	39.8825	40.7495	41.6165	43.3505	45.0845	46.8185
508	.8136	.6806	.5477	.4147	.2817	.1487	.0157	.8827	.7498	.6168	.3508	.0848	.8189
511	.8139	.6809	.5479	.4149	.2819	.1490	.0160	.8830	.7500	.6171	.3511	.0851	.8192
514	.8141	.6811	.5481	.4152	.2822	.1492	.0163	.8833	.7503	.6173	.3514	.0855	.8195
517	.8143	.6814	.5484	.4154	.2825	.1495	.0165	.8836	.7506	.6176	.3517	.0858	.8198
433520	33.8146	34.6816	35.5486	36.4157	37.2827	38.1498	39.0168	39.8838	40.7509	41.6179	43.3520	45.0861	46.8202
523	.8148	.6818	.5489	.4159	.2830	.1500	.0171	.8841	.7512	.6182	.3523	.0864	.8205
526	.8150	.6821	.5491	.4162	.2832	.1503	.0173	.8844	.7514	.6185	.3526	.0867	.8208
529	.8153	.6823	.5494	.4164	.2835	.1506	.0176	.8847	.7517	.6188	.3529	.0870	.8211
532	.8155	.6826	.5496	.4167	.2838	.1508	.0179	.8849	.7520	.6191	.3532	.0873	.8215
433535	33.8157	34.6828	35.5499	36.4169	37.2840	38.1511	39.0182	39.8852	40.7523	41.6194	43.3535	45.0876	46.8218
538	.8160	.6830	.5501	.4172	.2843	.1513	.0184	.8855	.7526	.6196	.3538	.0880	.8221
541	.8162	.6833	.5504	.4174	.2845	.1516	.0187	.8858	.7529	.6199	.3541	.0883	.8224
544	.8164	.6835	.5506	.4177	.2848	.1519	.0190	.8860	.7531	.6202	.3544	.0886	.8228
547	.8167	.6838	.5509	.4179	.2850	.1521	.0192	.8863	.7534	.6205	.3547	.0889	.8231
433550	33.8169	34.6840	35.5511	36.4182	37.2853	38.1524	39.0195	39.8866	40.7537	41.6208	43.3550	45.0892	46.8234
553	.8171	.6842	.5513	.4185	.2856	.1527	.0198	.8869	.7540	.6211	.3553	.0895	.8237
556	.8174	.6845	.5516	.4187	.2858	.1529	.0200	.8872	.7543	.6214	.3556	.0898	.8240
559	.8176	.6847	.5518	.4190	.2861	.1532	.0203	.8874	.7545	.6217	.3559	.0901	.8244
562	.8178	.6850	.5521	.4192	.2863	.1535	.0206	.8877	.7548	.6220	.3562	.0904	.8247
433565	33.8181	34.6852	35.5523	36.4195	37.2866	38.1537	39.0209	39.8880	40.7551	41.6222	43.3565	45.0908	46.8250
568	.8183	.6854	.5526	.4197	.2868	.1540	.0211	.8883	.7554	.6225	.3568	.0911	.8253
571	.8185	.6857	.5528	.4200	.2871	.1542	.0214	.8885	.7557	.6228	.3571	.0914	.8257
574	.8188	.6859	.5531	.4202	.2874	.1545	.0217	.8888	.7560	.6231	.3574	.0917	.8260
577	.8190	.6862	.5533	.4205	.2876	.1548	.0219	.8891	.7562	.6234	.3577	.0920	.8263
433580	33.8192	34.6864	35.5536	36.4207	37.2879	38.1550	39.0222	39.8894	40.7565	41.6237	43.3580	45.0923	46.8266
583	.8195	.6866	.5538	.4210	.2881	.1553	.0225	.8896	.7568	.6240	.3583	.0926	.8270
586	.8197	.6869	.5541	.4212	.2884	.1556	.0227	.8899	.7571	.6243	.3586	.0929	.8273
589	.8199	.6871	.5543	.4215	.2887	.1558	.0230	.8902	.7574	.6245	.3589	.0933	.8276
592	.8202	.6874	.5545	.4217	.2889	.1561	.0233	.8905	.7576	.6248	.3592	.0936	.8279
433595	33.8204	34.6876	35.5548	36.4220	37.2892	38.1564	39.0236	39.8907	40.7579	41.6251	43.3595	45.0939	46.8283
598	.8206	.6878	.5550	.4222	.2894	.1566	.0238	.8910	.7582	.6254	.3598	.0942	.8286
601	.8209	.6881	.5553	.4225	.2897	.1569	.0241	.8913	.7585	.6257	.3601	.0945	.8289
604	.8211	.6883	.5555	.4227	.2899	.1572	.0244	.8916	.7588	.6260	.3604	.0948	.8292
607	.8213	.6886	.5558	.4230	.2902	.1574	.0246	.8918	.7591	.6263	.3607	.0951	.8296
433610	33.8216	34.6888	35.5560	36.4232	37.2905	38.1577	39.0249	39.8921	40.7593	41.6266	43.3610	45.0954	46.8299
613	.8218	.6890	.5563	.4235	.2907	.1579	.0252	.8924	.7596	.6268	.3613	.0958	.8302
616	.8220	.6893	.5565	.4237	.2910	.1582	.0254	.8927	.7599	.6271	.3616	.0961	.8305
619	.8223	.6895	.5568	.4240	.2912	.1585	.0257	.8929	.7602	.6274	.3619	.0964	.8309
622	.8225	.6898	.5570	.4242	.2915	.1587	.0260	.8932	.7605	.6277	.3622	.0967	.8312
433625	33.8228	34.6900	35.5573	36.4245	37.2918	38.1590	39.0263	39.8935	40.7608	41.6280	43.3625	45.0970	46.8315
628	.8230	.6902	.5575	.4248	.2920	.1593	.0265	.8938	.7610	.6283	.3628	.0973	.8318
631	.8232	.6905	.5577	.4250	.2923	.1595	.0268	.8941	.7613	.6286	.3631	.0976	.8321
634	.8235	.6907	.5580	.4253	.2925	.1598	.0271	.8943	.7616	.6289	.3634	.0979	.8325
637	.8237	.6910	.5582	.4255	.2928	.1601	.0273	.8946	.7619	.6292	.3637	.0982	.8328
433640	33.8239	34.6912	35.5585	36.4258	37.2930	38.1603	39.0276	39.8949	40.7622	41.6294	43.3640	45.0986	46.8331
643	.8242	.6914	.5587	.4260	.2933	.1606	.0279	.8952	.7624	.6297	.3643	.0989	.8334
646	.8244	.6917	.5590	.4263	.2936	.1608	.0281	.8954	.7627	.6300	.3646	.0992	.8338
649	.8246	.6919	.5592	.4265	.2938	.1611	.0284	.8957	.7630	.6303	.3649	.0995	.8341
652	.8249	.6922	.5595	.4268	.2941	.1614	.0287	.8960	.7633	.6306	.3652	.0998	.8344
433655	33.8251	34.6924	35.5597	36.4270	37.2943	38.1616	39.0290	39.8963	40.7636	41.6309	43.3655	45.1001	46.8347
658	.8253	.6926	.5600	.4273	.2946	.1619	.0292	.8965	.7639	.6312	.3658	.1004	.8351
661	.8256	.6929	.5602	.4275	.2948	.1622	.0295	.8968	.7641	.6315	.3661	.1007	.8354
664	.8258	.6931	.5604	.4278	.2951	.1624	.0298	.8971	.7644	.6317	.3664	.1011	.8357
667	.8260	.6934	.5607	.4280	.2954	.1627	.0300	.8974	.7647	.6320	.3667	.1014	.8360
433670	33.8263	34.6936	35.5609	36.4283	37.2956	38.1630	39.0303	39.8976	40.7650	41.6323	43.3670	45.1017	46.8364
673	.8265	.6938	.5612	.4285	.2959	.1632	.0306	.8979	.7653	.6326	.3673	.1020	.8367
676	.8267	.6941	.5614	.4288	.2961	.1635	.0308	.8982	.7655	.6329	.3676	.1023	.8370
679	.8270	.6943	.5617	.4290	.2964	.1638	.0311	.8985	.7658	.6332	.3679	.1026	.8373
682	.8272	.6946	.5619	.4293	.2967	.1640	.0314	.8987	.7661	.6335	.3682	.1029	.8377
433685	33.8274	34.6948	35.5622	36.4295	37.2969	38.1643	39.0317	39.8990	40.7664	41.6338	43.3685	45.1032	46.8380
688	.8277	.6950	.5624	.4298	.2972	.1645	.0319	.8993	.7667	.6340	.3688	.1036	.8383
691	.8279	.6953	.5627	.4300	.2974	.1648	.0322	.8996	.7670	.6343	.3691	.1039	.8386
694	.8281	.6955	.5629	.4303	.2977	.1651	.0325	.8998	.7672	.6346	.3694	.1042	.8390
697	.8284	.6958	.5632	.4305	.2979	.1653	.0327	.9001	.7675	.6349	.3697	.1045	.8393
433700	33.8286	34.6960	35.5634	36.4308	37.2982	38.1656	39.0330	39.9004	40.7678	41.6352	43.3700	45.1048	46.8396

MEGACYCLES PER SECOND

H A R M O N I C S

BASIC FREQ.	52	54	56	58	60	62	64	66	68	70	72	74	76
433700	22.5524	23.4198	24.2872	25.1546	26.0220	26.8894	27.7568	28.6242	29.4916	30.3590	31.2264	32.0938	32.9612
703	.5526	.4200	.2874	.1548	.0222	.8896	.7570	.6244	.4918	.3592	.2266	.0940	.9614
706	.5527	.4201	.2875	.1549	.0224	.8898	.7572	.6246	.4920	.3594	.2268	.0942	.9617
709	.5529	.4203	.2877	.1551	.0225	.8900	.7574	.6248	.4922	.3596	.2270	.0945	.9619
712	.5530	.4204	.2879	.1553	.0227	.8901	.7576	.6250	.4924	.3598	.2273	.0947	.9621
433715	22.5532	23.4206	24.2880	25.1555	26.0229	26.8903	27.7578	28.6252	29.4926	30.3601	31.2275	32.0949	32.9623
718	.5533	.4208	.2882	.1556	.0231	.8905	.7580	.6254	.4928	.3603	.2277	.0951	.9626
721	.5535	.4209	.2884	.1558	.0233	.8907	.7581	.6256	.4930	.3605	.2279	.0954	.9628
724	.5536	.4211	.2885	.1560	.0234	.8909	.7583	.6258	.4932	.3607	.2281	.0956	.9630
727	.5538	.4213	.2887	.1562	.0236	.8911	.7585	.6260	.4934	.3609	.2283	.0958	.9633
433730	22.5540	23.4214	24.2889	25.1563	26.0238	26.8913	27.7587	28.6262	29.4936	30.3611	31.2286	32.0960	32.9635
733	.5541	.4216	.2890	.1565	.0240	.8914	.7589	.6264	.4938	.3613	.2288	.0962	.9637
736	.5543	.4217	.2892	.1567	.0242	.8916	.7591	.6266	.4940	.3615	.2290	.0965	.9639
739	.5544	.4219	.2894	.1569	.0243	.8918	.7593	.6268	.4943	.3617	.2292	.0967	.9642
742	.5546	.4221	.2896	.1570	.0245	.8920	.7595	.6270	.4945	.3619	.2294	.0969	.9644
433745	22.5547	23.4222	24.2897	25.1572	26.0247	26.8922	27.7597	28.6272	29.4947	30.3622	31.2296	32.0971	32.9646
748	.5549	.4224	.2899	.1574	.0249	.8924	.7599	.6274	.4949	.3624	.2299	.0974	.9648
751	.5551	.4226	.2901	.1576	.0251	.8926	.7601	.6276	.4951	.3626	.2301	.0976	.9651
754	.5552	.4227	.2902	.1577	.0252	.8927	.7603	.6278	.4953	.3628	.2303	.0978	.9653
757	.5554	.4229	.2904	.1579	.0254	.8929	.7604	.6280	.4955	.3630	.2305	.0980	.9655
433760	22.5555	23.4230	24.2906	25.1581	26.0256	26.8931	27.7606	28.6282	29.4957	30.3632	31.2307	32.0982	32.9658
763	.5557	.4232	.2907	.1583	.0258	.8933	.7608	.6284	.4959	.3634	.2309	.0985	.9660
766	.5558	.4234	.2909	.1584	.0260	.8935	.7610	.6286	.4961	.3636	.2312	.0987	.9662
769	.5560	.4235	.2911	.1586	.0261	.8937	.7612	.6288	.4963	.3638	.2314	.0989	.9664
772	.5561	.4237	.2912	.1588	.0263	.8939	.7614	.6290	.4965	.3640	.2316	.0991	.9667
433775	22.5563	23.4239	24.2914	25.1590	26.0265	26.8941	27.7616	28.6292	29.4967	30.3643	31.2318	32.0994	32.9669
778	.5565	.4240	.2916	.1591	.0267	.8942	.7618	.6293	.4969	.3645	.2320	.0996	.9671
781	.5566	.4242	.2917	.1593	.0269	.8944	.7620	.6295	.4971	.3647	.2322	.0998	.9674
784	.5568	.4243	.2919	.1595	.0270	.8946	.7622	.6297	.4973	.3649	.2324	.1000	.9676
787	.5569	.4245	.2921	.1596	.0272	.8948	.7624	.6299	.4975	.3651	.2327	.1002	.9678
433790	22.5571	23.4247	24.2922	25.1598	26.0274	26.8950	27.7626	28.6301	29.4977	30.3653	31.2329	32.1005	32.9680
793	.5572	.4248	.2924	.1600	.0276	.8952	.7628	.6303	.4979	.3655	.2331	.1007	.9683
796	.5574	.4250	.2926	.1602	.0278	.8954	.7629	.6305	.4981	.3657	.2333	.1009	.9685
799	.5575	.4251	.2927	.1603	.0279	.8955	.7631	.6307	.4983	.3659	.2335	.1011	.9687
802	.5577	.4253	.2929	.1605	.0281	.8957	.7633	.6309	.4985	.3661	.2337	.1013	.9690
433805	22.5579	23.4255	24.2931	25.1607	26.0283	26.8959	27.7635	28.6311	29.4987	30.3664	31.2340	32.1016	32.9692
808	.5580	.4256	.2932	.1609	.0285	.8961	.7637	.6313	.4989	.3666	.2342	.1018	.9694
811	.5582	.4258	.2934	.1610	.0287	.8963	.7639	.6315	.4991	.3668	.2344	.1020	.9696
814	.5583	.4260	.2936	.1612	.0288	.8965	.7641	.6317	.4994	.3670	.2346	.1022	.9699
817	.5585	.4261	.2938	.1614	.0290	.8967	.7643	.6319	.4996	.3672	.2348	.1025	.9701
433820	22.5586	23.4263	24.2939	25.1616	26.0292	26.8968	27.7645	28.6321	29.4998	30.3674	31.2350	32.1027	32.9703
823	.5588	.4264	.2941	.1617	.0294	.8970	.7647	.6323	.5000	.3676	.2353	.1029	.9705
826	.5590	.4266	.2943	.1619	.0296	.8972	.7649	.6325	.5002	.3678	.2355	.1031	.9708
829	.5591	.4268	.2944	.1621	.0297	.8974	.7651	.6327	.5004	.3680	.2357	.1033	.9710
832	.5593	.4269	.2946	.1623	.0299	.8976	.7652	.6329	.5006	.3682	.2359	.1036	.9712
433835	22.5594	23.4271	24.2948	25.1624	26.0301	26.8978	27.7654	28.6331	29.5008	30.3685	31.2361	32.1038	32.9715
838	.5596	.4273	.2949	.1626	.0303	.8980	.7656	.6333	.5010	.3687	.2363	.1040	.9717
841	.5597	.4274	.2951	.1628	.0305	.8981	.7658	.6335	.5012	.3689	.2366	.1042	.9719
844	.5599	.4276	.2953	.1630	.0306	.8983	.7660	.6337	.5014	.3691	.2368	.1045	.9721
847	.5600	.4277	.2954	.1631	.0308	.8985	.7662	.6339	.5016	.3693	.2370	.1047	.9724
433850	22.5602	23.4279	24.2956	25.1633	26.0310	26.8987	27.7664	28.6341	29.5018	30.3695	31.2372	32.1049	32.9726
853	.5604	.4281	.2958	.1635	.0312	.8989	.7666	.6343	.5020	.3697	.2374	.1051	.9728
856	.5605	.4282	.2959	.1636	.0314	.8991	.7668	.6345	.5022	.3699	.2376	.1053	.9731
859	.5607	.4284	.2961	.1638	.0315	.8993	.7670	.6347	.5024	.3701	.2378	.1056	.9733
862	.5608	.4285	.2963	.1640	.0317	.8994	.7672	.6349	.5026	.3703	.2381	.1058	.9735
433865	22.5610	23.4287	24.2964	25.1642	26.0319	26.8996	27.7674	28.6351	29.5028	30.3706	31.2383	32.1060	32.9737
868	.5611	.4289	.2966	.1643	.0321	.8998	.7676	.6353	.5030	.3708	.2385	.1062	.9740
871	.5613	.4290	.2968	.1645	.0323	.9000	.7677	.6355	.5032	.3710	.2387	.1065	.9742
874	.5614	.4292	.2969	.1647	.0324	.9002	.7679	.6357	.5034	.3712	.2389	.1067	.9744
877	.5616	.4294	.2971	.1649	.0326	.9004	.7681	.6359	.5036	.3714	.2391	.1069	.9747
433880	22.5618	23.4295	24.2973	25.1650	26.0328	26.9006	27.7683	28.6361	29.5038	30.3716	31.2394	32.1071	32.9749
883	.5619	.4297	.2974	.1652	.0330	.9007	.7685	.6363	.5040	.3718	.2396	.1073	.9751
886	.5621	.4298	.2976	.1654	.0332	.9009	.7687	.6365	.5042	.3720	.2398	.1076	.9753
889	.5622	.4300	.2978	.1656	.0333	.9011	.7689	.6367	.5045	.3722	.2400	.1078	.9756
892	.5624	.4302	.2980	.1657	.0335	.9013	.7691	.6369	.5047	.3724	.2402	.1080	.9758
433895	22.5625	23.4303	24.2981	25.1659	26.0337	26.9015	27.7693	28.6371	29.5049	30.3727	31.2404	32.1082	32.9760
898	.5627	.4305	.2983	.1661	.0339	.9017	.7695	.6373	.5051	.3729	.2407	.1085	.9762
901	.5629	.4307	.2985	.1663	.0341	.9019	.7697	.6375	.5053	.3731	.2409	.1087	.9765
904	.5630	.4308	.2986	.1664	.0342	.9020	.7699	.6377	.5055	.3733	.2411	.1089	.9767
907	.5632	.4310	.2988	.1666	.0344	.9022	.7700	.6379	.5057	.3735	.2413	.1091	.9769
433910	22.5633	23.4311	24.2990	25.1668	26.0346	26.9024	27.7702	28.6381	29.5059	30.3737	31.2415	32.1093	32.9772
913	.5635	.4313	.2991	.1670	.0348	.9026	.7704	.6383	.5061	.3739	.2417	.1096	.9774
916	.5636	.4315	.2993	.1671	.0350	.9028	.7706	.6385	.5063	.3741	.2420	.1098	.9776
919	.5638	.4316	.2995	.1673	.0351	.9030	.7708	.6387	.5065	.3743	.2422	.1100	.9778
922	.5639	.4318	.2996	.1675	.0353	.9032	.7710	.6389	.5067	.3745	.2424	.1102	.9781
433925	22.5641	23.4320	24.2998	25.1677	26.0355	26.9034	27.7712	28.6391	29.5069	30.3748	31.2426	32.1105	32.9783
928	.5643	.4321	.3000	.1678	.0357	.9035	.7714	.6392	.5071	.3750	.2428	.1107	.9785
931	.5644	.4323	.3001	.1680	.0359	.9037	.7716	.6394	.5073	.3752	.2430	.1109	.9788
934	.5646	.4324	.3003	.1682	.0360	.9039	.7718	.6396	.5075	.3754	.2432	.1111	.9790
937	.5647	.4326	.3005	.1683	.0362	.9041	.7720	.6398	.5077	.3756	.2435	.1113	.9792
433940	22.5649	23.4328	24.3006	25.1685	26.0364	26.9043	27.7722	28.6400	29.5079	30.3758	31.2437	32.1116	32.9794
943	.5650	.4329	.3008	.1687	.0366	.9045	.7724	.6402	.5081	.3760	.2439	.1118	.9797
946	.5652	.4331	.3010	.1689	.0368	.9047	.7725	.6404	.5083	.3762	.2441	.1120	.9799
949	.5653	.4332	.3011	.1690	.0369	.9048	.7727	.6406	.5085	.3764	.2443	.1122	.9801
952	.5655	.4334	.3013	.1692	.0371	.9050	.7729	.6408	.5087	.3766	.2445	.1124	.9804
433955	22.5657	23.4336	24.3015	25.1694	26.0373	26.9052	27.7731	28.6410	29.5089	30.3769	31.2448	32.1127	32.9806
958	.5658	.4337	.3016	.1696	.0375	.9054	.7733	.6412	.5091	.3771	.2450	.1129	.9808
961	.5660	.4339	.3018	.1697	.0377	.9056	.7735	.6414	.5093	.3773	.2452	.1131	.9810
964	.5661	.4341	.3020	.1699	.0378	.9058	.7737	.6416	.5096	.3775	.2454	.1133	.9813
967	.5663	.4342	.3022	.1701	.0380	.9060	.7739	.6418	.5098	.3777	.2456	.1136	.9815
433970	22.5664	23.4344	24.3023	25.1703	26.0382	26.9061	27.7741	28.6420	29.5100	30.3779	31.2458	32.1138	32.9817
973	.5666	.4345	.3025	.1704	.0384	.9063	.7743	.6422	.5102	.3781	.2461	.1140	.9819
976	.5668	.4347	.3027	.1706	.0386	.9065	.7745	.6424	.5104	.3783	.2463	.1142	.9822
979	.5669	.4349	.3028	.1708	.0387	.9067	.7747	.6426	.5106	.3785	.2465	.1144	.9824
982	.5671	.4350	.3030	.1710	.0389	.9069	.7748	.6428	.5108	.3787	.2467	.1147	.9826
433985	22.5672	23.4352	24.3032	25.1711	26.0391	26.9071	27.7750	28.6430	29.5110	30.3790	31.2469	32.1149	32.9829
988	.5674	.4354	.3033	.1713	.0393	.9073	.7752	.6432	.5112	.3792	.2471	.1151	.9831
991	.5675	.4355	.3035	.1715	.0395	.9074	.7754	.6434	.5114	.3794	.2474	.1153	.9833
994	.5677	.4357	.3037	.1717	.0396	.9076	.7756	.6436	.5116	.3796	.2476	.1156	.9835
997	.5678	.4358	.3038	.1718	.0398	.9078	.7758	.6438	.5118	.3798	.2478	.1158	.9838
434000	22.5680	23.4360	24.3040	25.1720	26.0400	26.9080	27.7760	28.6440	29.5120	30.3800	31.2480	32.1160	32.9840

MEGACYCLES PER SECOND

H A R M O N I C S

BASIC FREQ.	78	80	82	84	86	88	90	92	94	96	100	104	108
433700	33.8286	34.6960	35.5634	36.4308	37.2982	38.1656	39.0330	39.9004	40.7678	41.6352	43.3700	45.1048	46.8396
703	.8288	.6962	.5636	.4311	.2985	.1659	.0333	.9007	.7681	.6355	.3703	.1051	.8399
706	.8291	.6965	.5639	.4313	.2987	.1661	.0335	.9010	.7684	.6358	.3706	.1054	.8402
709	.8293	.6967	.5641	.4316	.2990	.1664	.0338	.9012	.7686	.6361	.3709	.1057	.8406
712	.8295	.6970	.5644	.4318	.2992	.1667	.0341	.9015	.7689	.6364	.3712	.1060	.8409
433715	33.8298	34.6972	35.5646	36.4321	37.2995	38.1669	39.0344	39.9018	40.7692	41.6366	43.3715	45.1064	46.8412
718	.8300	.6974	.5649	.4323	.2997	.1672	.0346	.9021	.7695	.6369	.3718	.1067	.8415
721	.8302	.6977	.5651	.4326	.3000	.1674	.0349	.9023	.7698	.6372	.3721	.1070	.8419
724	.8305	.6979	.5654	.4328	.3003	.1677	.0352	.9026	.7701	.6375	.3724	.1073	.8422
727	.8307	.6982	.5656	.4331	.3005	.1680	.0354	.9029	.7703	.6378	.3727	.1076	.8425
433730	33.8309	34.6984	35.5659	36.4333	37.3008	38.1682	39.0357	39.9032	40.7706	41.6381	43.3730	45.1079	46.8428
733	.8312	.6986	.5661	.4336	.3010	.1685	.0360	.9034	.7709	.6384	.3733	.1082	.8432
736	.8314	.6989	.5664	.4338	.3013	.1688	.0362	.9037	.7712	.6387	.3736	.1085	.8435
739	.8316	.6991	.5666	.4341	.3016	.1690	.0365	.9040	.7715	.6389	.3739	.1089	.8438
742	.8319	.6994	.5668	.4343	.3018	.1693	.0368	.9043	.7717	.6392	.3742	.1092	.8441
433745	33.8321	34.6996	35.5671	36.4346	37.3021	38.1696	39.0371	39.9045	40.7720	41.6395	43.3745	45.1095	46.8445
748	.8323	.6998	.5673	.4348	.3023	.1698	.0373	.9048	.7723	.6398	.3748	.1098	.8448
751	.8326	.7001	.5676	.4351	.3026	.1701	.0376	.9051	.7726	.6401	.3751	.1101	.8451
754	.8328	.7003	.5678	.4353	.3028	.1704	.0379	.9054	.7729	.6404	.3754	.1104	.8454
757	.8330	.7006	.5681	.4356	.3031	.1706	.0381	.9056	.7732	.6407	.3757	.1107	.8458
433760	33.8333	34.7008	35.5683	36.4358	37.3034	38.1709	39.0384	39.9059	40.7734	41.6410	43.3760	45.1110	46.8461
763	.8335	.7010	.5686	.4361	.3036	.1711	.0387	.9062	.7737	.6412	.3763	.1114	.8464
766	.8337	.7013	.5688	.4363	.3039	.1714	.0389	.9065	.7740	.6415	.3766	.1117	.8467
769	.8340	.7015	.5691	.4366	.3041	.1717	.0392	.9067	.7743	.6418	.3769	.1120	.8471
772	.8342	.7018	.5693	.4368	.3044	.1719	.0395	.9070	.7746	.6421	.3772	.1123	.8474
433775	33.8345	34.7020	35.5696	36.4371	37.3047	38.1722	39.0398	39.9073	40.7749	41.6424	43.3775	45.1126	46.8477
778	.8347	.7022	.5698	.4374	.3049	.1725	.0400	.9076	.7751	.6427	.3778	.1129	.8480
781	.8349	.7025	.5700	.4376	.3052	.1727	.0403	.9079	.7754	.6430	.3781	.1132	.8483
784	.8352	.7027	.5703	.4379	.3054	.1730	.0406	.9081	.7757	.6433	.3784	.1135	.8487
787	.8354	.7030	.5705	.4381	.3057	.1733	.0408	.9084	.7760	.6436	.3787	.1138	.8490
433790	33.8356	34.7032	35.5708	36.4384	37.3059	38.1735	39.0411	39.9087	40.7763	41.6438	43.3790	45.1142	46.8493
793	.8359	.7034	.5710	.4386	.3062	.1738	.0414	.9090	.7765	.6441	.3793	.1145	.8496
796	.8361	.7037	.5713	.4389	.3065	.1740	.0416	.9092	.7768	.6444	.3796	.1148	.8500
799	.8363	.7039	.5715	.4391	.3067	.1743	.0419	.9095	.7771	.6447	.3799	.1151	.8503
802	.8366	.7042	.5718	.4394	.3070	.1746	.0422	.9098	.7774	.6450	.3802	.1154	.8506
433805	33.8368	34.7044	35.5720	36.4396	37.3072	38.1748	39.0425	39.9101	40.7777	41.6453	43.3805	45.1157	46.8509
808	.8370	.7046	.5723	.4399	.3075	.1751	.0427	.9103	.7780	.6456	.3808	.1160	.8513
811	.8373	.7049	.5725	.4401	.3077	.1754	.0430	.9106	.7782	.6459	.3811	.1163	.8516
814	.8375	.7051	.5727	.4404	.3080	.1756	.0433	.9109	.7785	.6461	.3814	.1167	.8519
817	.8377	.7054	.5730	.4406	.3083	.1759	.0435	.9112	.7788	.6464	.3817	.1170	.8522
433820	33.8380	34.7056	35.5732	36.4409	37.3085	38.1762	39.0438	39.9114	40.7791	41.6467	43.3820	45.1173	46.8526
823	.8382	.7058	.5735	.4411	.3088	.1764	.0441	.9117	.7794	.6470	.3823	.1176	.8529
826	.8384	.7061	.5737	.4414	.3090	.1767	.0443	.9120	.7796	.6473	.3826	.1179	.8532
829	.8387	.7063	.5740	.4416	.3093	.1770	.0446	.9123	.7799	.6476	.3829	.1182	.8535
832	.8389	.7066	.5742	.4419	.3096	.1772	.0449	.9125	.7802	.6479	.3832	.1185	.8539
433835	33.8391	34.7068	35.5745	36.4421	37.3098	38.1775	39.0452	39.9128	40.7805	41.6482	43.3835	45.1188	46.8542
838	.8394	.7070	.5747	.4424	.3101	.1777	.0454	.9131	.7808	.6484	.3838	.1192	.8545
841	.8396	.7073	.5750	.4426	.3103	.1780	.0457	.9134	.7811	.6487	.3841	.1195	.8548
844	.8398	.7075	.5752	.4429	.3106	.1783	.0460	.9136	.7813	.6490	.3844	.1198	.8552
847	.8401	.7078	.5755	.4431	.3108	.1785	.0462	.9139	.7816	.6493	.3847	.1201	.8555
433850	33.8403	34.7080	35.5757	36.4434	37.3111	38.1788	39.0465	39.9142	40.7819	41.6496	43.3850	45.1204	46.8558
853	.8405	.7082	.5759	.4437	.3114	.1791	.0468	.9145	.7822	.6499	.3853	.1207	.8561
856	.8408	.7085	.5762	.4439	.3116	.1793	.0470	.9148	.7825	.6502	.3856	.1210	.8564
859	.8410	.7087	.5764	.4442	.3119	.1796	.0473	.9150	.7827	.6505	.3859	.1213	.8568
862	.8412	.7090	.5767	.4444	.3121	.1799	.0476	.9153	.7830	.6508	.3862	.1216	.8571
433865	33.8415	34.7092	35.5769	36.4447	37.3124	38.1801	39.0479	39.9156	40.7833	41.6510	43.3865	45.1220	46.8574
868	.8417	.7094	.5772	.4449	.3126	.1804	.0481	.9159	.7836	.6513	.3868	.1223	.8577
871	.8419	.7097	.5774	.4452	.3129	.1806	.0484	.9161	.7839	.6516	.3871	.1226	.8581
874	.8422	.7099	.5777	.4454	.3132	.1809	.0487	.9164	.7842	.6519	.3874	.1229	.8584
877	.8424	.7102	.5779	.4457	.3134	.1812	.0489	.9167	.7844	.6522	.3877	.1232	.8587
433880	33.8426	34.7104	35.5782	36.4459	37.3137	38.1814	39.0492	39.9170	40.7847	41.6525	43.3880	45.1235	46.8590
883	.8429	.7106	.5784	.4462	.3139	.1817	.0495	.9172	.7850	.6528	.3883	.1238	.8594
886	.8431	.7109	.5787	.4464	.3142	.1820	.0497	.9175	.7853	.6531	.3886	.1241	.8597
889	.8433	.7111	.5789	.4467	.3145	.1822	.0500	.9178	.7856	.6533	.3889	.1245	.8600
892	.8436	.7114	.5791	.4469	.3147	.1825	.0503	.9181	.7858	.6536	.3892	.1248	.8603
433895	33.8438	34.7116	35.5794	36.4472	37.3150	38.1828	39.0506	39.9183	40.7861	41.6539	43.3895	45.1251	46.8607
898	.8440	.7118	.5796	.4474	.3152	.1830	.0508	.9186	.7864	.6542	.3898	.1254	.8610
901	.8443	.7121	.5799	.4477	.3155	.1833	.0511	.9189	.7867	.6545	.3901	.1257	.8613
904	.8445	.7123	.5801	.4479	.3157	.1836	.0514	.9192	.7870	.6548	.3904	.1260	.8616
907	.8447	.7126	.5804	.4482	.3160	.1838	.0516	.9194	.7873	.6551	.3907	.1263	.8620
433910	33.8450	34.7128	35.5806	36.4484	37.3163	38.1841	39.0519	39.9197	40.7875	41.6554	43.3910	45.1266	46.8623
913	.8452	.7130	.5809	.4487	.3165	.1843	.0522	.9200	.7878	.6556	.3913	.1270	.8626
916	.8454	.7133	.5811	.4489	.3168	.1846	.0524	.9203	.7881	.6559	.3916	.1273	.8629
919	.8457	.7135	.5814	.4492	.3170	.1849	.0527	.9205	.7884	.6562	.3919	.1276	.8633
922	.8459	.7138	.5816	.4494	.3173	.1851	.0530	.9208	.7887	.6565	.3922	.1279	.8636
433925	33.8462	34.7140	35.5819	36.4497	37.3176	38.1854	39.0533	39.9211	40.7890	41.6568	43.3925	45.1282	46.8639
928	.8464	.7142	.5821	.4500	.3178	.1857	.0535	.9214	.7892	.6571	.3928	.1285	.8642
931	.8466	.7145	.5823	.4502	.3181	.1859	.0538	.9217	.7895	.6574	.3931	.1288	.8645
934	.8469	.7147	.5826	.4505	.3183	.1862	.0541	.9219	.7898	.6577	.3934	.1291	.8649
937	.8471	.7150	.5828	.4507	.3186	.1865	.0543	.9222	.7901	.6580	.3937	.1294	.8652
433940	33.8473	34.7152	35.5831	36.4510	37.3188	38.1867	39.0546	39.9225	40.7904	41.6582	43.3940	45.1298	46.8655
943	.8476	.7154	.5833	.4512	.3191	.1870	.0549	.9228	.7906	.6585	.3943	.1301	.8658
946	.8478	.7157	.5836	.4515	.3194	.1872	.0551	.9230	.7909	.6588	.3946	.1304	.8662
949	.8480	.7159	.5838	.4517	.3196	.1875	.0554	.9233	.7912	.6591	.3949	.1307	.8665
952	.8483	.7162	.5841	.4520	.3199	.1878	.0557	.9236	.7915	.6594	.3952	.1310	.8668
433955	33.8485	34.7164	35.5843	36.4522	37.3201	38.1880	39.0560	39.9239	40.7918	41.6597	43.3955	45.1313	46.8671
958	.8487	.7166	.5846	.4525	.3204	.1883	.0562	.9241	.7921	.6600	.3958	.1316	.8675
961	.8490	.7169	.5848	.4527	.3206	.1886	.0565	.9244	.7923	.6603	.3961	.1319	.8678
964	.8492	.7171	.5850	.4530	.3209	.1888	.0568	.9247	.7926	.6605	.3964	.1323	.8681
967	.8494	.7174	.5853	.4532	.3212	.1891	.0570	.9250	.7929	.6608	.3967	.1326	.8684
433970	33.8497	34.7176	35.5855	36.4535	37.3214	38.1894	39.0573	39.9252	40.7932	41.6611	43.3970	45.1329	46.8688
973	.8499	.7178	.5858	.4537	.3217	.1896	.0576	.9255	.7935	.6614	.3973	.1332	.8691
976	.8501	.7181	.5860	.4540	.3219	.1899	.0578	.9258	.7937	.6617	.3976	.1335	.8694
979	.8504	.7183	.5863	.4542	.3222	.1902	.0581	.9261	.7940	.6620	.3979	.1338	.8697
982	.8506	.7186	.5865	.4545	.3225	.1904	.0584	.9263	.7943	.6623	.3982	.1341	.8701
433985	33.8508	34.7188	35.5868	36.4547	37.3227	38.1907	39.0587	39.9266	40.7946	41.6626	43.3985	45.1344	46.8704
988	.8511	.7190	.5870	.4550	.3230	.1909	.0589	.9269	.7949	.6628	.3988	.1348	.8707
991	.8513	.7193	.5873	.4552	.3232	.1912	.0592	.9272	.7952	.6631	.3991	.1351	.8710
994	.8515	.7195	.5875	.4555	.3235	.1915	.0595	.9274	.7954	.6634	.3994	.1354	.8714
997	.8518	.7198	.5878	.4557	.3237	.1917	.0597	.9277	.7957	.6637	.3997	.1357	.8717
434000	33.8520	34.7200	35.5880	36.4560	37.3240	38.1920	39.0600	39.9280	40.7960	41.6640	43.4000	45.1360	46.8720

MEGACYCLES PER SECOND

HARMONICS

BASIC FREQ.	112	116	120	124	128	132	136	140	144	148	152	156	160
416600	46.6592	48.3256	49.9920	51.6584	53.3248	54.9912	56.6576	58.3240	59.9904	61.6568	63.3232	64.9896	66.6560
603	.6595	.3259	.9924	.6588	.3252	.9916	.6580	.3244	.9908	.6572	.3237	.9901	.6565
606	.6599	.3263	.9927	.6591	.3256	.9920	.6584	.3248	.9913	.6577	.3241	.9905	.6570
609	.6602	.3266	.9931	.6595	.3260	.9924	.6588	.3253	.9917	.6581	.3246	.9910	.6574
612	.6605	.3270	.9934	.6599	.3263	.9928	.6592	.3257	.9921	.6586	.3250	.9915	.6579
416615	46.6609	48.3273	49.9938	51.6603	53.3267	54.9932	56.6596	58.3261	59.9926	61.6590	63.3255	64.9919	66.6584
618	.6612	.3277	.9942	.6606	.3271	.9936	.6600	.3265	.9930	.6595	.3259	.9924	.6589
621	.6616	.3280	.9945	.6610	.3275	.9940	.6605	.3269	.9934	.6599	.3264	.9929	.6594
624	.6619	.3284	.9949	.6614	.3279	.9944	.6609	.3274	.9939	.6604	.3268	.9933	.6598
627	.6622	.3287	.9952	.6617	.3283	.9948	.6613	.3278	.9943	.6608	.3273	.9938	.6603
416630	46.6626	48.3291	49.9956	51.6621	53.3286	54.9952	56.6617	58.3282	59.9947	61.6612	63.3278	64.9943	66.6608
633	.6629	.3294	.9960	.6625	.3290	.9956	.6621	.3286	.9952	.6617	.3282	.9947	.6613
636	.6632	.3298	.9963	.6629	.3294	.9960	.6625	.3290	.9956	.6621	.3287	.9952	.6618
639	.6636	.3301	.9967	.6632	.3298	.9963	.6629	.3295	.9960	.6626	.3291	.9957	.6622
642	.6639	.3305	.9970	.6636	.3302	.9967	.6633	.3299	.9964	.6630	.3296	.9962	.6627
416645	46.6642	48.3308	49.9974	51.6640	53.3306	54.9971	56.6637	58.3303	59.9969	61.6635	63.3300	64.9966	66.6632
648	.6646	.3312	.9978	.6644	.3309	.9975	.6641	.3307	.9973	.6639	.3305	.9971	.6637
651	.6649	.3315	.9981	.6647	.3313	.9979	.6645	.3311	.9977	.6643	.3310	.9976	.6642
654	.6652	.3319	.9985	.6651	.3317	.9983	.6649	.3316	.9982	.6648	.3314	.9980	.6646
657	.6656	.3322	.9988	.6655	.3321	.9987	.6654	.3320	.9986	.6652	.3319	.9985	.6651
416660	46.6659	48.3326	49.9992	51.6658	53.3325	54.9991	56.6658	58.3324	59.9990	61.6657	63.3323	64.9990	66.6656
663	.6663	.3329	.9996	.6662	.3329	.9995	.6662	.3328	.9995	.6661	.3328	.9994	.6661
666	.6666	.3333	.9999	.6666	.3332	.9999	.6666	.3332	.9999	.6666	.3332	.9999	.6666
669	.6669	.3336	50.0003	.6670	.3336	55.0003	.6670	.3337	60.0003	.6670	.3337	65.0004	.6670
672	.6673	.3340	.0006	.6673	.3340	.0007	.6674	.3341	.0008	.6675	.3341	.0008	.6675
416675	46.6676	48.3343	50.0010	51.6677	53.3344	55.0011	56.6678	58.3345	60.0012	61.6679	63.3346	65.0013	66.6680
678	.6679	.3346	.0014	.6681	.3348	.0015	.6682	.3349	.0016	.6683	.3351	.0018	.6685
681	.6683	.3350	.0017	.6684	.3352	.0019	.6686	.3353	.0021	.6688	.3355	.0022	.6690
684	.6686	.3353	.0021	.6688	.3356	.0023	.6690	.3358	.0025	.6692	.3360	.0027	.6694
687	.6689	.3357	.0024	.6692	.3359	.0027	.6694	.3362	.0029	.6697	.3364	.0032	.6699
416690	46.6693	48.3360	50.0028	51.6696	53.3363	55.0031	56.6698	58.3366	60.0034	61.6701	63.3369	65.0036	66.6704
693	.6696	.3364	.0032	.6699	.3367	.0035	.6702	.3370	.0038	.6706	.3373	.0041	.6709
696	.6700	.3367	.0035	.6703	.3371	.0039	.6707	.3374	.0042	.6710	.3378	.0046	.6714
699	.6703	.3371	.0039	.6707	.3375	.0043	.6711	.3379	.0047	.6715	.3382	.0050	.6718
702	.6706	.3374	.0042	.6710	.3379	.0047	.6715	.3383	.0051	.6719	.3387	.0055	.6723
416705	46.6710	48.3378	50.0046	51.6714	53.3382	55.0051	56.6719	58.3387	60.0055	61.6723	63.3392	65.0060	66.6728
708	.6713	.3381	.0050	.6718	.3386	.0055	.6723	.3391	.0060	.6728	.3396	.0064	.6733
711	.6716	.3385	.0053	.6722	.3390	.0059	.6727	.3395	.0064	.6732	.3401	.0069	.6738
714	.6720	.3388	.0057	.6725	.3394	.0062	.6731	.3400	.0068	.6737	.3405	.0074	.6742
717	.6723	.3392	.0060	.6729	.3398	.0066	.6735	.3404	.0072	.6741	.3410	.0079	.6747
416720	46.6726	48.3395	50.0064	51.6733	53.3402	55.0070	56.6739	58.3408	60.0077	61.6746	63.3414	65.0083	66.6752
723	.6730	.3399	.0068	.6737	.3405	.0074	.6743	.3412	.0081	.6750	.3419	.0088	.6757
726	.6733	.3402	.0071	.6740	.3409	.0078	.6747	.3416	.0085	.6754	.3424	.0093	.6762
729	.6736	.3406	.0075	.6744	.3413	.0082	.6751	.3421	.0090	.6759	.3428	.0097	.6766
732	.6740	.3409	.0078	.6748	.3417	.0086	.6756	.3425	.0094	.6763	.3433	.0102	.6771
416735	46.6743	48.3413	50.0082	51.6751	53.3421	55.0090	56.6760	58.3429	60.0098	61.6768	63.3437	65.0107	66.6776
738	.6747	.3416	.0086	.6755	.3425	.0094	.6764	.3433	.0103	.6772	.3442	.0111	.6781
741	.6750	.3420	.0089	.6759	.3428	.0098	.6768	.3437	.0107	.6777	.3446	.0116	.6786
744	.6753	.3423	.0093	.6763	.3432	.0102	.6772	.3442	.0111	.6781	.3451	.0121	.6790
747	.6757	.3427	.0096	.6766	.3436	.0106	.6776	.3446	.0116	.6786	.3455	.0125	.6795
416750	46.6760	48.3430	50.0100	51.6770	53.3440	55.0110	56.6780	58.3450	60.0120	61.6790	63.3460	65.0130	66.6800
753	.6763	.3433	.0104	.6774	.3444	.0114	.6784	.3454	.0124	.6794	.3465	.0135	.6805
756	.6767	.3437	.0107	.6777	.3448	.0118	.6788	.3458	.0129	.6799	.3469	.0139	.6810
759	.6770	.3440	.0111	.6781	.3452	.0122	.6792	.3463	.0133	.6803	.3474	.0144	.6814
762	.6773	.3444	.0114	.6785	.3455	.0126	.6796	.3467	.0137	.6808	.3478	.0149	.6819
416765	46.6777	48.3447	50.0118	51.6789	53.3459	55.0130	56.6800	58.3471	60.0142	61.6812	63.3483	65.0153	66.6824
768	.6780	.3451	.0122	.6792	.3463	.0134	.6804	.3475	.0146	.6817	.3487	.0158	.6829
771	.6784	.3454	.0125	.6796	.3467	.0138	.6809	.3479	.0150	.6821	.3492	.0163	.6834
774	.6787	.3458	.0129	.6800	.3471	.0142	.6813	.3484	.0155	.6826	.3496	.0167	.6838
777	.6790	.3461	.0132	.6803	.3475	.0146	.6817	.3488	.0159	.6830	.3501	.0172	.6843
416780	46.6794	48.3465	50.0136	51.6807	53.3478	55.0150	56.6821	58.3492	60.0163	61.6834	63.3506	65.0177	66.6848
783	.6797	.3468	.0140	.6811	.3482	.0154	.6825	.3496	.0168	.6839	.3510	.0181	.6853
786	.6800	.3472	.0143	.6815	.3486	.0158	.6829	.3500	.0172	.6843	.3515	.0186	.6858
789	.6804	.3475	.0147	.6818	.3490	.0161	.6833	.3505	.0176	.6848	.3519	.0191	.6862
792	.6807	.3479	.0150	.6822	.3494	.0165	.6837	.3509	.0180	.6852	.3524	.0196	.6867
416795	46.6810	48.3482	50.0154	51.6826	53.3498	55.0169	56.6841	58.3513	60.0185	61.6857	63.3528	65.0200	66.6872
798	.6814	.3486	.0158	.6830	.3501	.0173	.6845	.3517	.0189	.6861	.3533	.0205	.6877
801	.6817	.3489	.0161	.6833	.3505	.0177	.6849	.3521	.0193	.6865	.3538	.0210	.6882
804	.6820	.3493	.0165	.6837	.3509	.0181	.6853	.3526	.0198	.6870	.3542	.0214	.6886
807	.6824	.3496	.0168	.6841	.3513	.0185	.6858	.3530	.0202	.6874	.3547	.0219	.6891
416810	46.6827	48.3500	50.0172	51.6844	53.3517	55.0189	56.6862	58.3534	60.0206	61.6879	63.3551	65.0224	66.6896
813	.6831	.3503	.0176	.6848	.3521	.0193	.6866	.3538	.0211	.6883	.3556	.0228	.6901
816	.6834	.3507	.0179	.6852	.3524	.0197	.6870	.3542	.0215	.6888	.3560	.0233	.6906
819	.6837	.3510	.0183	.6856	.3528	.0201	.6874	.3547	.0219	.6892	.3565	.0238	.6910
822	.6841	.3514	.0186	.6859	.3532	.0205	.6878	.3551	.0224	.6897	.3569	.0242	.6915
416825	46.6844	48.3517	50.0190	51.6863	53.3536	55.0209	56.6882	58.3555	60.0228	61.6901	63.3574	65.0247	66.6920
828	.6847	.3520	.0194	.6867	.3540	.0213	.6886	.3559	.0232	.6905	.3579	.0252	.6925
831	.6851	.3524	.0197	.6870	.3544	.0217	.6890	.3563	.0237	.6910	.3583	.0256	.6930
834	.6854	.3527	.0201	.6874	.3548	.0221	.6894	.3568	.0241	.6914	.3588	.0261	.6934
837	.6857	.3531	.0204	.6878	.3551	.0225	.6898	.3572	.0245	.6919	.3592	.0266	.6939
416840	46.6861	48.3534	50.0208	51.6882	53.3555	55.0229	56.6902	58.3576	60.0250	61.6923	63.3597	65.0270	66.6944
843	.6864	.3538	.0212	.6885	.3559	.0233	.6906	.3580	.0254	.6928	.3601	.0275	.6949
846	.6868	.3541	.0215	.6889	.3563	.0237	.6911	.3584	.0258	.6932	.3606	.0280	.6954
849	.6871	.3545	.0219	.6893	.3567	.0241	.6915	.3589	.0263	.6937	.3610	.0284	.6958
852	.6874	.3548	.0222	.6896	.3571	.0245	.6919	.3593	.0267	.6941	.3615	.0289	.6963
416855	46.6878	48.3552	50.0226	51.6900	53.3574	55.0249	56.6923	58.3597	60.0271	61.6945	63.3620	65.0294	66.6968
858	.6881	.3555	.0230	.6904	.3578	.0253	.6927	.3601	.0276	.6950	.3624	.0298	.6973
861	.6884	.3559	.0233	.6908	.3582	.0257	.6931	.3605	.0280	.6954	.3629	.0303	.6978
864	.6888	.3562	.0237	.6911	.3586	.0260	.6935	.3610	.0284	.6959	.3633	.0308	.6982
867	.6891	.3566	.0240	.6915	.3590	.0264	.6939	.3614	.0288	.6963	.3638	.0313	.6987
416870	46.6894	48.3569	50.0244	51.6919	53.3594	55.0268	56.6943	58.3618	60.0293	61.6968	63.3642	65.0317	66.6992
873	.6898	.3573	.0248	.6923	.3597	.0272	.6947	.3622	.0297	.6972	.3647	.0322	.6997
876	.6901	.3576	.0251	.6926	.3601	.0276	.6951	.3626	.0301	.6976	.3652	.0327	.7002
879	.6904	.3580	.0255	.6930	.3605	.0280	.6955	.3631	.0306	.6981	.3656	.0331	.7006
882	.6908	.3583	.0258	.6934	.3609	.0284	.6960	.3635	.0310	.6985	.3661	.0336	.7011
416885	46.6911	48.3587	50.0262	51.6937	53.3613	55.0288	56.6964	58.3639	60.0314	61.6990	63.3665	65.0341	66.7016
888	.6915	.3590	.0266	.6941	.3617	.0292	.6968	.3643	.0319	.6994	.3670	.0345	.7021
891	.6918	.3594	.0269	.6945	.3620	.0296	.6972	.3647	.0323	.6999	.3674	.0350	.7026
894	.6921	.3597	.0273	.6949	.3624	.0300	.6976	.3652	.0327	.7003	.3679	.0355	.7030
897	.6925	.3601	.0276	.6952	.3628	.0304	.6980	.3656	.0332	.7008	.3683	.0359	.7035
416900	46.6928	48.3604	50.0280	51.6956	53.3632	55.0308	56.6984	58.3660	60.0336	61.7012	63.3688	65.0364	66.7040

MEGACYCLES PER SECOND

H A R M O N I C S

BASIC FREQ.	164	168	172	176	180	184	188	192	200	208	216	224	232
416600	68.3224	69.9888	71.6552	73.3216	74.9880	76.6544	78.3208	79.9872	83.3200	86.6528	89.9856	93.3184	96.6512
603	.3229	.9893	.6557	.3221	.9885	.6550	.3214	.9878	.3206	.6534	.9862	.3191	.6519
606	.3234	.9898	.6562	.3227	.9891	.6555	.3219	.9884	.3212	.6540	.9869	.3197	.6526
609	.3239	.9903	.6567	.3232	.9896	.6561	.3225	.9889	.3218	.6547	.9875	.3204	.6533
612	.3244	.9908	.6573	.3237	.9902	.6566	.3231	.9895	.3224	.6553	.9882	.3211	.6540
416615	68.3249	69.9913	71.6578	73.3242	74.9907	76.6572	78.3236	79.9901	83.3230	86.6559	89.9888	93.3218	96.6547
618	.3254	.9918	.6583	.3248	.9912	.6577	.3242	.9907	.3236	.6565	.9895	.3224	.6554
621	.3258	.9923	.6588	.3253	.9918	.6583	.3247	.9912	.3242	.6572	.9901	.3231	.6561
624	.3263	.9928	.6593	.3258	.9923	.6588	.3253	.9918	.3248	.6578	.9908	.3238	.6568
627	.3268	.9933	.6598	.3264	.9929	.6594	.3259	.9924	.3254	.6584	.9914	.3244	.6575
416630	68.3273	69.9938	71.6604	73.3269	74.9934	76.6599	78.3264	79.9930	83.3260	86.6590	89.9921	93.3251	96.6582
633	.3278	.9943	.6609	.3274	.9939	.6605	.3270	.9935	.3266	.6597	.9927	.3258	.6589
636	.3283	.9948	.6614	.3279	.9945	.6610	.3276	.9941	.3272	.6603	.9934	.3265	.6596
639	.3288	.9954	.6619	.3285	.9950	.6616	.3281	.9947	.3278	.6609	.9940	.3271	.6602
642	.3293	.9959	.6624	.3290	.9956	.6621	.3287	.9953	.3284	.6615	.9947	.3278	.6609
416645	68.3298	69.9964	71.6629	73.3295	74.9961	76.6627	78.3293	79.9958	83.3290	86.6622	89.9953	93.3285	96.6616
648	.3303	.9969	.6635	.3300	.9966	.6632	.3298	.9964	.3296	.6628	.9960	.3292	.6623
651	.3308	.9974	.6640	.3306	.9972	.6638	.3304	.9970	.3302	.6634	.9966	.3298	.6630
654	.3313	.9979	.6645	.3311	.9977	.6643	.3310	.9976	.3308	.6640	.9973	.3305	.6637
657	.3317	.9984	.6650	.3316	.9983	.6649	.3315	.9981	.3314	.6647	.9979	.3312	.6644
416660	68.3322	69.9989	71.6655	73.3322	74.9988	76.6654	78.3321	79.9987	83.3320	86.6653	89.9986	93.3318	96.6651
663	.3327	.9994	.6660	.3327	.9993	.6660	.3326	.9993	.3326	.6659	.9992	.3325	.6658
666	.3332	.9999	.6666	.3332	.9999	.6665	.3332	.9999	.3332	.6665	.9999	.3332	.6665
669	.3337	70.0004	.6671	.3337	75.0004	.6671	.3338	80.0004	.3338	.6672	90.0005	.3339	.6672
672	.3342	.0009	.6676	.3343	.0010	.6676	.3343	.0010	.3344	.6678	.0012	.3345	.6679
416675	68.3347	70.0014	71.6681	73.3348	75.0015	76.6682	78.3349	80.0016	83.3350	86.6684	90.0018	93.3352	96.6686
678	.3352	.0019	.6686	.3353	.0020	.6688	.3355	.0022	.3356	.6690	.0024	.3359	.6693
681	.3357	.0024	.6691	.3359	.0026	.6693	.3360	.0028	.3362	.6696	.0031	.3365	.6700
684	.3362	.0029	.6696	.3364	.0031	.6699	.3366	.0033	.3368	.6703	.0037	.3372	.6707
687	.3367	.0034	.6702	.3369	.0037	.6704	.3372	.0039	.3374	.6709	.0044	.3379	.6714
416690	68.3372	70.0039	71.6707	73.3374	75.0042	76.6710	78.3377	80.0045	83.3380	86.6715	90.0050	93.3386	96.6721
693	.3377	.0044	.6712	.3380	.0047	.6715	.3383	.0051	.3386	.6721	.0057	.3392	.6728
696	.3381	.0049	.6717	.3385	.0053	.6721	.3388	.0056	.3392	.6728	.0063	.3399	.6735
699	.3386	.0054	.6722	.3390	.0058	.6726	.3394	.0062	.3398	.6734	.0070	.3406	.6742
702	.3391	.0059	.6727	.3396	.0064	.6732	.3400	.0068	.3404	.6740	.0076	.3412	.6749
416705	68.3396	70.0064	71.6733	73.3401	75.0069	76.6737	78.3405	80.0074	83.3410	86.6746	90.0083	93.3419	96.6756
708	.3401	.0069	.6738	.3406	.0074	.6743	.3411	.0079	.3416	.6753	.0089	.3426	.6763
711	.3406	.0074	.6743	.3411	.0080	.6748	.3417	.0085	.3422	.6759	.0096	.3433	.6770
714	.3411	.0080	.6748	.3417	.0085	.6754	.3422	.0091	.3428	.6765	.0102	.3439	.6776
717	.3416	.0085	.6753	.3422	.0091	.6759	.3428	.0097	.3434	.6771	.0109	.3446	.6783
416720	68.3421	70.0090	71.6758	73.3427	75.0096	76.6765	78.3434	80.0102	83.3440	86.6778	90.0115	93.3453	96.6790
723	.3426	.0095	.6764	.3432	.0101	.6770	.3439	.0108	.3446	.6784	.0122	.3460	.6797
726	.3431	.0100	.6769	.3438	.0107	.6776	.3445	.0114	.3452	.6790	.0128	.3466	.6804
729	.3436	.0105	.6774	.3443	.0112	.6781	.3451	.0120	.3458	.6796	.0135	.3473	.6811
732	.3440	.0110	.6779	.3448	.0118	.6787	.3456	.0125	.3464	.6803	.0141	.3480	.6818
416735	68.3445	70.0115	71.6784	73.3454	75.0123	76.6792	78.3462	80.0131	83.3470	86.6809	90.0148	93.3486	96.6825
738	.3450	.0120	.6789	.3459	.0128	.6798	.3467	.0137	.3476	.6815	.0154	.3493	.6832
741	.3455	.0125	.6795	.3464	.0134	.6803	.3473	.0143	.3482	.6821	.0161	.3500	.6839
744	.3460	.0130	.6800	.3469	.0139	.6809	.3479	.0148	.3488	.6828	.0167	.3507	.6846
747	.3465	.0135	.6805	.3475	.0145	.6814	.3484	.0154	.3494	.6834	.0174	.3513	.6853
416750	68.3470	70.0140	71.6810	73.3480	75.0150	76.6820	78.3490	80.0160	83.3500	86.6840	90.0180	93.3520	96.6860
753	.3475	.0145	.6815	.3485	.0155	.6826	.3496	.0166	.3506	.6846	.0186	.3527	.6867
756	.3480	.0150	.6820	.3491	.0161	.6831	.3501	.0172	.3512	.6852	.0193	.3533	.6874
759	.3485	.0155	.6825	.3496	.0166	.6837	.3507	.0177	.3518	.6859	.0199	.3540	.6881
762	.3490	.0160	.6831	.3501	.0172	.6842	.3513	.0183	.3524	.6865	.0206	.3547	.6888
416765	68.3495	70.0165	71.6836	73.3506	75.0177	76.6848	78.3518	80.0189	83.3530	86.6871	90.0212	93.3554	96.6895
768	.3500	.0170	.6841	.3512	.0182	.6853	.3524	.0195	.3536	.6877	.0219	.3560	.6902
771	.3504	.0175	.6846	.3517	.0188	.6859	.3529	.0200	.3542	.6884	.0225	.3567	.6909
774	.3509	.0180	.6851	.3522	.0193	.6864	.3535	.0206	.3548	.6890	.0232	.3574	.6916
777	.3514	.0185	.6856	.3528	.0199	.6870	.3541	.0212	.3554	.6896	.0238	.3580	.6923
416780	68.3519	70.0190	71.6862	73.3533	75.0204	76.6875	78.3546	80.0218	83.3560	86.6902	90.0245	93.3587	96.6930
783	.3524	.0195	.6867	.3538	.0209	.6881	.3552	.0223	.3566	.6909	.0251	.3594	.6937
786	.3529	.0200	.6872	.3543	.0215	.6886	.3558	.0229	.3572	.6915	.0258	.3601	.6944
789	.3534	.0206	.6877	.3549	.0220	.6892	.3563	.0235	.3578	.6921	.0264	.3607	.6950
792	.3539	.0211	.6882	.3554	.0226	.6897	.3569	.0241	.3584	.6927	.0271	.3614	.6957
416795	68.3544	70.0216	71.6887	73.3559	75.0231	76.6903	78.3575	80.0246	83.3590	86.6934	90.0277	93.3621	96.6964
798	.3549	.0221	.6893	.3564	.0236	.6908	.3580	.0252	.3596	.6940	.0284	.3628	.6971
801	.3554	.0226	.6898	.3570	.0242	.6914	.3586	.0258	.3602	.6946	.0290	.3634	.6978
804	.3559	.0231	.6903	.3575	.0247	.6919	.3592	.0264	.3608	.6952	.0297	.3641	.6985
807	.3563	.0236	.6908	.3580	.0253	.6925	.3597	.0269	.3614	.6959	.0303	.3648	.6992
416810	68.3568	70.0241	71.6913	73.3586	75.0258	76.6930	78.3603	80.0275	83.3620	86.6965	90.0310	93.3654	96.6999
813	.3573	.0246	.6918	.3591	.0263	.6936	.3608	.0281	.3626	.6971	.0316	.3661	.7006
816	.3578	.0251	.6924	.3596	.0269	.6941	.3614	.0287	.3632	.6977	.0323	.3668	.7013
819	.3583	.0256	.6929	.3601	.0274	.6947	.3620	.0292	.3638	.6984	.0329	.3675	.7020
822	.3588	.0261	.6934	.3607	.0280	.6952	.3625	.0298	.3644	.6990	.0336	.3681	.7027
416825	68.3593	70.0266	71.6939	73.3612	75.0285	76.6958	78.3631	80.0304	83.3650	86.6996	90.0342	93.3688	96.7034
828	.3598	.0271	.6944	.3617	.0290	.6964	.3637	.0310	.3656	.7002	.0348	.3695	.7041
831	.3603	.0276	.6949	.3623	.0296	.6969	.3642	.0316	.3662	.7008	.0355	.3701	.7048
834	.3608	.0281	.6954	.3628	.0301	.6975	.3648	.0321	.3668	.7015	.0361	.3708	.7055
837	.3613	.0286	.6960	.3633	.0307	.6980	.3654	.0327	.3674	.7021	.0368	.3715	.7062
416840	68.3618	70.0291	71.6965	73.3638	75.0312	76.6986	78.3659	80.0333	83.3680	86.7027	90.0374	93.3722	96.7069
843	.3623	.0296	.6970	.3644	.0317	.6991	.3665	.0339	.3686	.7033	.0381	.3728	.7076
846	.3627	.0301	.6975	.3649	.0323	.6997	.3670	.0344	.3692	.7040	.0387	.3735	.7083
849	.3632	.0306	.6980	.3654	.0328	.7002	.3676	.0350	.3698	.7046	.0394	.3742	.7090
852	.3637	.0311	.6985	.3660	.0334	.7008	.3682	.0356	.3704	.7052	.0400	.3748	.7097
416855	68.3642	70.0316	71.6991	73.3665	75.0339	76.7013	78.3687	80.0362	83.3710	86.7058	90.0407	93.3755	96.7104
858	.3647	.0321	.6996	.3670	.0344	.7019	.3693	.0367	.3716	.7065	.0413	.3762	.7111
861	.3652	.0326	.7001	.3675	.0350	.7024	.3699	.0373	.3722	.7071	.0420	.3769	.7118
864	.3657	.0332	.7006	.3681	.0355	.7030	.3704	.0379	.3728	.7077	.0426	.3775	.7124
867	.3662	.0337	.7011	.3686	.0361	.7035	.3710	.0385	.3734	.7083	.0433	.3782	.7131
416870	68.3667	70.0342	71.7016	73.3691	75.0366	76.7041	78.3716	80.0390	83.3740	86.7090	90.0439	93.3789	96.7138
873	.3672	.0347	.7022	.3696	.0371	.7046	.3721	.0396	.3746	.7096	.0446	.3796	.7145
876	.3677	.0352	.7027	.3702	.0377	.7052	.3727	.0402	.3752	.7102	.0452	.3802	.7152
879	.3682	.0357	.7032	.3707	.0382	.7057	.3733	.0408	.3758	.7108	.0459	.3809	.7159
882	.3686	.0362	.7037	.3712	.0388	.7063	.3738	.0413	.3764	.7115	.0465	.3816	.7166
416885	68.3691	70.0367	71.7042	73.3718	75.0393	76.7068	78.3744	80.0419	83.3770	86.7121	90.0472	93.3822	96.7173
888	.3696	.0372	.7047	.3723	.0398	.7074	.3749	.0425	.3776	.7127	.0478	.3829	.7180
891	.3701	.0377	.7053	.3728	.0404	.7079	.3755	.0431	.3782	.7133	.0485	.3836	.7187
894	.3706	.0382	.7058	.3733	.0409	.7085	.3761	.0436	.3788	.7140	.0491	.3843	.7194
897	.3711	.0387	.7063	.3739	.0415	.7090	.3766	.0442	.3794	.7146	.0498	.3849	.7201
416900	68.3716	70.0392	71.7068	73.3744	75.0420	76.7096	78.3772	80.0448	83.3800	86.7152	90.0504	93.3856	96.7208

MEGACYCLES PER SECOND

H A R M O N I C S

BASIC FREQ.	112	116	120	124	128	132	136	140	144	148	152	156	160
416900	46.6928	48.3604	50.0280	51.6956	53.3632	55.0308	56.6984	58.3660	60.0336	61.7012	63.3688	65.0364	66.7040
903	.6931	.3607	.0284	.6960	.3636	.0312	.6988	.3664	.0340	.7016	.3693	.0369	.7045
906	.6935	.3611	.0287	.6963	.3640	.0316	.6992	.3668	.0345	.7021	.3697	.0373	.7050
909	.6938	.3614	.0291	.6967	.3644	.0320	.6996	.3673	.0349	.7025	.3702	.0378	.7054
912	.6941	.3618	.0294	.6971	.3647	.0324	.7000	.3677	.0353	.7030	.3706	.0383	.7059
416915	46.6945	48.3621	50.0298	51.6975	53.3651	55.0328	56.7004	58.3681	60.0358	61.7034	63.3711	65.0387	66.7064
918	.6948	.3625	.0302	.6978	.3655	.0332	.7008	.3685	.0362	.7039	.3715	.0392	.7069
921	.6952	.3628	.0305	.6982	.3659	.0336	.7013	.3689	.0366	.7043	.3720	.0397	.7074
924	.6955	.3632	.0309	.6986	.3663	.0340	.7017	.3694	.0371	.7048	.3724	.0401	.7078
927	.6958	.3635	.0312	.6989	.3667	.0344	.7021	.3698	.0375	.7052	.3729	.0406	.7083
416930	46.6962	48.3639	50.0316	51.6993	53.3670	55.0348	56.7025	58.3702	60.0379	61.7056	63.3734	65.0411	66.7088
933	.6965	.3642	.0320	.6997	.3674	.0352	.7029	.3706	.0384	.7061	.3738	.0415	.7093
936	.6968	.3646	.0323	.7001	.3678	.0356	.7033	.3710	.0388	.7065	.3743	.0420	.7098
939	.6972	.3649	.0327	.7004	.3682	.0359	.7037	.3715	.0392	.7070	.3747	.0425	.7102
942	.6975	.3653	.0330	.7008	.3686	.0363	.7041	.3719	.0396	.7074	.3752	.0430	.7107
416945	46.6978	48.3656	50.0334	51.7012	53.3690	55.0367	56.7045	58.3723	60.0401	61.7079	63.3756	65.0434	66.7112
948	.6982	.3660	.0338	.7016	.3693	.0371	.7049	.3727	.0405	.7083	.3761	.0439	.7117
951	.6985	.3663	.0341	.7019	.3697	.0375	.7053	.3731	.0409	.7087	.3766	.0444	.7122
954	.6988	.3667	.0345	.7023	.3701	.0379	.7057	.3736	.0414	.7092	.3770	.0448	.7126
957	.6992	.3670	.0348	.7027	.3705	.0383	.7062	.3740	.0418	.7096	.3775	.0453	.7131
416960	46.6995	48.3674	50.0352	51.7030	53.3709	55.0387	56.7066	58.3744	60.0422	61.7101	63.3779	65.0458	66.7136
963	.6999	.3677	.0356	.7034	.3713	.0391	.7070	.3748	.0427	.7105	.3784	.0462	.7141
966	.7002	.3681	.0359	.7038	.3716	.0395	.7074	.3752	.0431	.7110	.3788	.0467	.7146
969	.7005	.3684	.0363	.7042	.3720	.0399	.7078	.3757	.0435	.7114	.3793	.0472	.7150
972	.7009	.3688	.0366	.7045	.3724	.0403	.7082	.3761	.0440	.7119	.3797	.0476	.7155
416975	46.7012	48.3691	50.0370	51.7049	53.3728	55.0407	56.7086	58.3765	60.0444	61.7123	63.3802	65.0481	66.7160
978	.7015	.3694	.0374	.7053	.3732	.0411	.7090	.3769	.0448	.7127	.3807	.0486	.7165
981	.7019	.3698	.0377	.7056	.3736	.0415	.7094	.3773	.0453	.7132	.3811	.0490	.7170
984	.7022	.3701	.0381	.7060	.3740	.0419	.7098	.3778	.0457	.7136	.3816	.0495	.7174
987	.7025	.3705	.0384	.7064	.3743	.0423	.7102	.3782	.0461	.7141	.3820	.0500	.7179
416990	46.7029	48.3708	50.0388	51.7068	53.3747	55.0427	56.7106	58.3786	60.0466	61.7145	63.3825	65.0504	66.7184
993	.7032	.3712	.0392	.7071	.3751	.0431	.7110	.3790	.0470	.7150	.3829	.0509	.7189
996	.7036	.3715	.0395	.7075	.3755	.0435	.7115	.3794	.0474	.7154	.3834	.0514	.7194
999	.7039	.3719	.0399	.7079	.3759	.0439	.7119	.3799	.0479	.7159	.3838	.0518	.7198
417002	.7042	.3722	.0402	.7082	.3763	.0443	.7123	.3803	.0483	.7163	.3843	.0523	.7203
417005	46.7046	48.3726	50.0406	51.7086	53.3766	55.0447	56.7127	58.3807	60.0487	61.7167	63.3848	65.0528	66.7208
008	.7049	.3729	.0410	.7090	.3770	.0451	.7131	.3811	.0492	.7172	.3852	.0532	.7213
011	.7052	.3733	.0413	.7094	.3774	.0455	.7135	.3815	.0496	.7176	.3857	.0537	.7218
014	.7056	.3736	.0417	.7097	.3778	.0458	.7139	.3820	.0500	.7181	.3861	.0542	.7222
017	.7059	.3740	.0420	.7101	.3782	.0462	.7143	.3824	.0504	.7185	.3866	.0547	.7227
417020	46.7062	48.3743	50.0424	51.7105	53.3786	55.0466	56.7147	58.3828	60.0509	61.7190	63.3870	65.0551	66.7232
023	.7066	.3747	.0428	.7109	.3789	.0470	.7151	.3832	.0513	.7194	.3875	.0556	.7237
026	.7069	.3750	.0431	.7112	.3793	.0474	.7155	.3836	.0517	.7198	.3880	.0561	.7242
029	.7072	.3754	.0435	.7116	.3797	.0478	.7159	.3841	.0522	.7203	.3884	.0565	.7246
032	.7076	.3757	.0438	.7120	.3801	.0482	.7164	.3845	.0526	.7207	.3889	.0570	.7251
417035	46.7079	48.3761	50.0442	51.7123	53.3805	55.0486	56.7168	58.3849	60.0530	61.7212	63.3893	65.0575	66.7256
038	.7083	.3764	.0446	.7127	.3809	.0490	.7172	.3853	.0535	.7216	.3898	.0579	.7261
041	.7086	.3768	.0449	.7131	.3812	.0494	.7176	.3857	.0539	.7221	.3902	.0584	.7266
044	.7089	.3771	.0453	.7135	.3816	.0498	.7180	.3862	.0543	.7225	.3907	.0589	.7270
047	.7093	.3775	.0456	.7138	.3820	.0502	.7184	.3866	.0548	.7230	.3911	.0593	.7275
417050	46.7096	48.3778	50.0460	51.7142	53.3824	55.0506	56.7188	58.3870	60.0552	61.7234	63.3916	65.0598	66.7280
053	.7099	.3781	.0464	.7146	.3828	.0510	.7192	.3874	.0556	.7238	.3921	.0603	.7285
056	.7103	.3785	.0467	.7149	.3832	.0514	.7196	.3878	.0561	.7243	.3925	.0607	.7290
059	.7106	.3788	.0471	.7153	.3836	.0518	.7200	.3883	.0565	.7247	.3930	.0612	.7294
062	.7109	.3792	.0474	.7157	.3839	.0522	.7204	.3887	.0569	.7252	.3934	.0617	.7299
417065	46.7113	48.3795	50.0478	51.7161	53.3843	55.0526	56.7208	58.3891	60.0574	61.7256	63.3939	65.0621	66.7304
068	.7116	.3799	.0482	.7164	.3847	.0530	.7212	.3895	.0578	.7261	.3943	.0626	.7309
071	.7120	.3802	.0485	.7168	.3851	.0534	.7217	.3899	.0582	.7265	.3948	.0631	.7314
074	.7123	.3806	.0489	.7172	.3855	.0538	.7221	.3904	.0587	.7270	.3952	.0635	.7318
077	.7126	.3809	.0492	.7175	.3859	.0542	.7225	.3908	.0591	.7274	.3957	.0640	.7323
417080	46.7130	48.3813	50.0496	51.7179	53.3862	55.0546	56.7229	58.3912	60.0595	61.7278	63.3962	65.0645	66.7328
083	.7133	.3816	.0500	.7183	.3866	.0550	.7233	.3916	.0600	.7283	.3966	.0649	.7333
086	.7136	.3820	.0503	.7187	.3870	.0554	.7237	.3920	.0604	.7287	.3971	.0654	.7338
089	.7140	.3823	.0507	.7190	.3874	.0557	.7241	.3925	.0608	.7292	.3975	.0659	.7342
092	.7143	.3827	.0510	.7194	.3878	.0561	.7245	.3929	.0612	.7296	.3980	.0664	.7347
417095	46.7146	48.3830	50.0514	51.7198	53.3882	55.0565	56.7249	58.3933	60.0617	61.7301	63.3984	65.0668	66.7352
098	.7150	.3834	.0518	.7202	.3885	.0569	.7253	.3937	.0621	.7305	.3989	.0673	.7357
101	.7153	.3837	.0521	.7205	.3889	.0573	.7257	.3941	.0625	.7309	.3994	.0678	.7362
104	.7156	.3841	.0525	.7209	.3893	.0577	.7261	.3946	.0630	.7314	.3998	.0682	.7366
107	.7160	.3844	.0528	.7213	.3897	.0581	.7266	.3950	.0634	.7318	.4003	.0687	.7371
417110	46.7163	48.3848	50.0532	51.7216	53.3901	55.0585	56.7270	58.3954	60.0638	61.7323	63.4007	65.0692	66.7376
113	.7167	.3851	.0536	.7220	.3905	.0589	.7274	.3958	.0643	.7327	.4012	.0696	.7381
116	.7170	.3855	.0539	.7224	.3908	.0593	.7278	.3962	.0647	.7332	.4016	.0701	.7386
119	.7173	.3858	.0543	.7228	.3912	.0597	.7282	.3967	.0651	.7336	.4021	.0706	.7390
122	.7177	.3862	.0546	.7231	.3916	.0601	.7286	.3971	.0656	.7341	.4025	.0710	.7395
417125	46.7180	48.3865	50.0550	51.7235	53.3920	55.0605	56.7290	58.3975	60.0660	61.7345	63.4030	65.0715	66.7400
128	.7183	.3868	.0554	.7239	.3924	.0609	.7294	.3979	.0664	.7349	.4035	.0720	.7405
131	.7187	.3872	.0557	.7242	.3928	.0613	.7298	.3983	.0669	.7354	.4039	.0724	.7410
134	.7190	.3875	.0561	.7246	.3932	.0617	.7302	.3988	.0673	.7358	.4044	.0729	.7414
137	.7193	.3879	.0564	.7250	.3935	.0621	.7306	.3992	.0677	.7363	.4048	.0734	.7419
417140	46.7197	48.3882	50.0568	51.7254	53.3939	55.0625	56.7310	58.3996	60.0682	61.7367	63.4053	65.0738	66.7424
143	.7200	.3886	.0572	.7257	.3943	.0629	.7314	.4000	.0686	.7372	.4057	.0743	.7429
146	.7204	.3889	.0575	.7261	.3947	.0633	.7319	.4004	.0690	.7376	.4062	.0748	.7434
149	.7207	.3893	.0579	.7265	.3951	.0637	.7323	.4009	.0695	.7381	.4066	.0752	.7438
152	.7210	.3896	.0582	.7268	.3955	.0641	.7327	.4013	.0699	.7385	.4071	.0757	.7443
417155	46.7214	48.3900	50.0586	51.7272	53.3958	55.0645	56.7331	58.4017	60.0703	61.7389	63.4076	65.0762	66.7448
158	.7217	.3903	.0590	.7276	.3962	.0649	.7335	.4021	.0708	.7394	.4080	.0766	.7453
161	.7220	.3907	.0593	.7280	.3966	.0653	.7339	.4025	.0712	.7398	.4085	.0771	.7458
164	.7224	.3910	.0597	.7283	.3970	.0656	.7343	.4030	.0716	.7403	.4089	.0776	.7462
167	.7227	.3914	.0600	.7287	.3974	.0660	.7347	.4034	.0720	.7407	.4094	.0781	.7467
417170	46.7230	48.3917	50.0604	51.7291	53.3978	55.0664	56.7351	58.4038	60.0725	61.7412	63.4098	65.0785	66.7472
173	.7234	.3921	.0608	.7295	.3981	.0668	.7355	.4042	.0729	.7416	.4103	.0790	.7477
176	.7237	.3924	.0611	.7298	.3985	.0672	.7359	.4046	.0733	.7420	.4108	.0795	.7482
179	.7240	.3928	.0615	.7302	.3989	.0676	.7363	.4051	.0738	.7425	.4112	.0799	.7486
182	.7244	.3931	.0618	.7306	.3993	.0680	.7368	.4055	.0742	.7429	.4117	.0804	.7491
417185	46.7247	48.3935	50.0622	51.7309	53.3997	55.0684	56.7372	58.4059	60.0746	61.7434	63.4121	65.0809	66.7496
188	.7251	.3938	.0626	.7313	.4001	.0688	.7376	.4063	.0751	.7438	.4126	.0813	.7501
191	.7254	.3942	.0629	.7317	.4004	.0692	.7380	.4067	.0755	.7443	.4130	.0818	.7506
194	.7257	.3945	.0633	.7321	.4088	.0696	.7384	.4072	.0759	.7447	.4135	.0823	.7510
197	.7261	.3949	.0636	.7324	.4012	.0700	.7388	.4076	.0764	.7452	.4139	.0827	.7515
417200	46.7264	48.3952	50.0640	51.7328	53.4016	55.0704	56.7392	58.4080	60.0768	61.7456	63.4144	65.0832	66.7520

MEGACYCLES PER SECOND

HARMONICS

BASIC FREQ.	164	168	172	176	180	184	188	192	200	208	216	224	232
416900	68.3716	70.0392	71.7068	73.3744	75.0420	76.7096	78.3772	80.0448	83.3800	86.7152	90.0504	93.3856	96.7208
903	.3721	.0397	.7073	.3749	.0425	.7102	.3778	.0454	.3806	.7158	.0510	.3863	.7215
906	.3726	.0402	.7078	.3755	.0431	.7107	.3783	.0460	.3812	.7164	.0517	.3869	.7222
909	.3731	.0407	.7083	.3760	.0436	.7113	.3789	.0465	.3818	.7171	.0523	.3876	.7229
912	.3736	.0412	.7089	.3765	.0442	.7118	.3795	.0471	.3824	.7177	.0530	.3883	.7236
416915	68.3741	70.0417	71.7094	73.3770	75.0447	76.7124	78.3800	80.0477	83.3830	86.7183	90.0536	93.3890	96.7243
918	.3746	.0422	.7099	.3776	.0452	.7129	.3806	.0483	.3836	.7189	.0543	.3896	.7250
921	.3750	.0427	.7104	.3781	.0458	.7135	.3811	.0488	.3842	.7196	.0549	.3903	.7257
924	.3755	.0432	.7109	.3786	.0463	.7140	.3817	.0494	.3848	.7202	.0556	.3910	.7264
927	.3760	.0437	.7114	.3792	.0469	.7146	.3823	.0500	.3854	.7208	.0562	.3916	.7271
416930	68.3765	70.0442	71.7120	73.3797	75.0474	76.7151	78.3828	80.0506	83.3860	86.7214	90.0569	93.3923	96.7278
933	.3770	.0447	.7125	.3802	.0479	.7157	.3834	.0511	.3866	.7221	.0575	.3930	.7285
936	.3775	.0452	.7130	.3807	.0485	.7162	.3840	.0517	.3872	.7227	.0582	.3937	.7292
939	.3780	.0458	.7135	.3813	.0490	.7168	.3845	.0523	.3878	.7233	.0588	.3943	.7298
942	.3785	.0463	.7140	.3818	.0496	.7173	.3851	.0529	.3884	.7239	.0595	.3950	.7305
416945	68.3790	70.0468	71.7145	73.3823	75.0501	76.7179	78.3857	80.0534	83.3890	86.7246	90.0601	93.3957	96.7312
948	.3795	.0473	.7151	.3828	.0506	.7184	.3862	.0540	.3896	.7252	.0608	.3964	.7319
951	.3800	.0478	.7156	.3834	.0512	.7190	.3868	.0546	.3902	.7258	.0614	.3970	.7326
954	.3805	.0483	.7161	.3839	.0517	.7195	.3874	.0552	.3908	.7264	.0621	.3977	.7333
957	.3809	.0488	.7166	.3844	.0523	.7201	.3879	.0557	.3914	.7271	.0627	.3984	.7340
416960	68.3814	70.0493	71.7171	73.3850	75.0528	76.7206	78.3885	80.0563	83.3920	86.7277	90.0634	93.3990	96.7347
963	.3819	.0498	.7176	.3855	.0533	.7212	.3890	.0569	.3926	.7283	.0640	.3997	.7354
966	.3824	.0503	.7182	.3860	.0539	.7217	.3896	.0575	.3932	.7289	.0647	.4004	.7361
969	.3829	.0508	.7187	.3865	.0544	.7223	.3902	.0580	.3938	.7296	.0653	.4011	.7368
972	.3834	.0513	.7192	.3871	.0550	.7228	.3907	.0586	.3944	.7302	.0660	.4017	.7375
416975	68.3839	70.0518	71.7197	73.3876	75.0555	76.7234	78.3913	80.0592	83.3950	86.7308	90.0666	93.4024	96.7382
978	.3844	.0523	.7202	.3881	.0560	.7240	.3919	.0598	.3956	.7314	.0672	.4031	.7389
981	.3849	.0528	.7207	.3887	.0566	.7245	.3924	.0604	.3962	.7320	.0679	.4037	.7396
984	.3854	.0533	.7212	.3892	.0571	.7251	.3930	.0609	.3968	.7327	.0685	.4044	.7403
987	.3859	.0538	.7218	.3897	.0577	.7256	.3936	.0615	.3974	.7333	.0692	.4051	.7410
416990	68.3864	70.0543	71.7223	73.3902	75.0582	76.7262	78.3941	80.0621	83.3980	86.7339	90.0698	93.4058	96.7417
993	.3869	.0548	.7228	.3908	.0587	.7267	.3947	.0627	.3986	.7345	.0705	.4064	.7424
996	.3873	.0553	.7233	.3913	.0593	.7273	.3952	.0632	.3992	.7352	.0711	.4071	.7431
999	.3878	.0558	.7238	.3918	.0598	.7278	.3958	.0638	.3998	.7358	.0718	.4078	.7438
417002	.3883	.0563	.7243	.3924	.0604	.7284	.3964	.0644	.4004	.7364	.0724	.4084	.7445
417005	68.3888	70.0568	71.7249	73.3929	75.0609	76.7289	78.3969	80.0650	83.4010	86.7370	90.0731	93.4091	96.7452
008	.3893	.0573	.7254	.3934	.0614	.7295	.3975	.0655	.4016	.7377	.0737	.4098	.7459
011	.3898	.0578	.7259	.3939	.0620	.7300	.3981	.0661	.4022	.7383	.0744	.4105	.7466
014	.3903	.0584	.7264	.3945	.0625	.7306	.3986	.0667	.4028	.7389	.0750	.4111	.7472
017	.3908	.0589	.7269	.3950	.0631	.7311	.3992	.0673	.4034	.7395	.0757	.4118	.7479
417020	68.3913	70.0594	71.7274	73.3955	75.0636	76.7317	78.3998	80.0678	83.4040	86.7402	90.0763	93.4125	96.7486
023	.3918	.0599	.7280	.3960	.0641	.7322	.4003	.0684	.4046	.7408	.0770	.4132	.7493
026	.3923	.0604	.7285	.3966	.0647	.7328	.4009	.0690	.4052	.7414	.0776	.4138	.7500
029	.3928	.0609	.7290	.3971	.0652	.7333	.4015	.0696	.4058	.7420	.0783	.4145	.7507
032	.3932	.0614	.7295	.3976	.0658	.7339	.4020	.0701	.4064	.7427	.0789	.4152	.7514
417035	68.3937	70.0619	71.7300	73.3982	75.0663	76.7344	78.4026	80.0707	83.4070	86.7433	90.0796	93.4158	96.7521
038	.3942	.0624	.7305	.3987	.0668	.7350	.4031	.0713	.4076	.7439	.0802	.4165	.7528
041	.3947	.0629	.7311	.3992	.0674	.7355	.4037	.0719	.4082	.7445	.0809	.4172	.7535
044	.3952	.0634	.7316	.3997	.0679	.7361	.4043	.0724	.4088	.7452	.0815	.4179	.7542
047	.3957	.0639	.7321	.4003	.0685	.7366	.4048	.0730	.4094	.7458	.0822	.4185	.7549
417050	68.3962	70.0644	71.7326	73.4008	75.0690	76.7372	78.4054	80.0736	83.4100	86.7464	90.0828	93.4192	96.7556
053	.3967	.0649	.7331	.4013	.0695	.7378	.4060	.0742	.4106	.7470	.0834	.4199	.7563
056	.3972	.0654	.7336	.4019	.0701	.7383	.4065	.0748	.4112	.7476	.0841	.4205	.7570
059	.3977	.0659	.7341	.4024	.0706	.7389	.4071	.0753	.4118	.7483	.0847	.4212	.7577
062	.3982	.0664	.7347	.4029	.0712	.7394	.4077	.0759	.4124	.7489	.0854	.4219	.7584
417065	68.3987	70.0669	71.7352	73.4034	75.0717	76.7400	78.4082	80.0765	83.4130	86.7495	90.0860	93.4226	96.7591
068	.3992	.0674	.7357	.4040	.0722	.7405	.4088	.0771	.4136	.7501	.0867	.4232	.7598
071	.3996	.0679	.7362	.4045	.0728	.7411	.4093	.0776	.4142	.7508	.0873	.4239	.7605
074	.4001	.0684	.7367	.4050	.0733	.7416	.4099	.0782	.4148	.7514	.0880	.4246	.7612
077	.4006	.0689	.7372	.4056	.0739	.7422	.4105	.0788	.4154	.7520	.0886	.4252	.7619
417080	68.4011	70.0694	71.7378	73.4061	75.0744	76.7427	78.4110	80.0794	83.4160	86.7526	90.0893	93.4259	96.7626
083	.4016	.0699	.7383	.4066	.0749	.7433	.4116	.0799	.4166	.7533	.0899	.4266	.7633
086	.4021	.0704	.7388	.4071	.0755	.7438	.4122	.0805	.4172	.7539	.0906	.4273	.7640
089	.4026	.0710	.7393	.4077	.0760	.7444	.4127	.0811	.4178	.7545	.0912	.4279	.7646
092	.4031	.0715	.7398	.4082	.0766	.7449	.4133	.0817	.4184	.7551	.0919	.4286	.7653
417095	68.4036	70.0720	71.7403	73.4087	75.0771	76.7455	78.4139	80.0822	83.4190	86.7558	90.0925	93.4293	96.7660
098	.4041	.0725	.7409	.4092	.0776	.7460	.4144	.0828	.4196	.7564	.0932	.4300	.7667
101	.4046	.0730	.7414	.4098	.0782	.7466	.4150	.0834	.4202	.7570	.0938	.4306	.7674
104	.4051	.0735	.7419	.4103	.0787	.7471	.4156	.0840	.4208	.7576	.0945	.4313	.7681
107	.4055	.0740	.7424	.4108	.0793	.7477	.4161	.0845	.4214	.7583	.0951	.4320	.7688
417110	68.4060	70.0745	71.7429	73.4114	75.0798	76.7482	78.4167	80.0851	83.4220	86.7589	90.0958	93.4326	96.7695
113	.4065	.0750	.7434	.4119	.0803	.7488	.4172	.0857	.4226	.7595	.0964	.4333	.7702
116	.4070	.0755	.7440	.4124	.0809	.7493	.4178	.0863	.4232	.7601	.0971	.4340	.7709
119	.4075	.0760	.7445	.4129	.0814	.7499	.4184	.0868	.4238	.7608	.0977	.4347	.7716
122	.4080	.0765	.7450	.4135	.0820	.7504	.4189	.0874	.4244	.7614	.0984	.4353	.7723
417125	68.4085	70.0770	71.7455	73.4140	75.0825	76.7510	78.4195	80.0880	83.4250	86.7620	90.0990	93.4360	96.7730
128	.4090	.0775	.7460	.4145	.0830	.7516	.4201	.0886	.4256	.7626	.0996	.4367	.7737
131	.4095	.0780	.7465	.4151	.0836	.7521	.4206	.0892	.4262	.7632	.1003	.4373	.7744
134	.4100	.0785	.7470	.4156	.0841	.7527	.4212	.0897	.4268	.7639	.1009	.4380	.7751
137	.4105	.0790	.7476	.4161	.0847	.7532	.4218	.0903	.4274	.7645	.1016	.4387	.7758
417140	68.4110	70.0795	71.7481	73.4166	75.0852	76.7538	78.4223	80.0909	83.4280	86.7651	90.1022	93.4394	96.7765
143	.4115	.0800	.7486	.4172	.0857	.7543	.4229	.0915	.4286	.7657	.1029	.4400	.7772
146	.4119	.0805	.7491	.4177	.0863	.7549	.4234	.0920	.4292	.7664	.1035	.4407	.7779
149	.4124	.0810	.7496	.4182	.0868	.7554	.4240	.0926	.4298	.7670	.1042	.4414	.7786
152	.4129	.0815	.7501	.4188	.0874	.7560	.4246	.0932	.4304	.7676	.1048	.4420	.7793
417155	68.4134	70.0820	71.7507	73.4193	75.0879	76.7565	78.4251	80.0938	83.4310	86.7682	90.1055	93.4427	96.7800
158	.4139	.0825	.7512	.4198	.0884	.7571	.4257	.0943	.4316	.7689	.1061	.4434	.7807
161	.4144	.0830	.7517	.4203	.0890	.7576	.4263	.0949	.4322	.7695	.1068	.4441	.7814
164	.4149	.0836	.7522	.4209	.0895	.7582	.4268	.0955	.4328	.7701	.1074	.4447	.7820
167	.4154	.0841	.7527	.4214	.0901	.7587	.4274	.0961	.4334	.7707	.1081	.4454	.7827
417170	68.4159	70.0846	71.7532	73.4219	75.0906	76.7593	78.4280	80.0966	83.4340	86.7714	90.1087	93.4461	96.7834
173	.4164	.0851	.7538	.4224	.0911	.7598	.4285	.0972	.4346	.7720	.1094	.4468	.7841
176	.4169	.0856	.7543	.4230	.0917	.7604	.4291	.0978	.4352	.7726	.1100	.4474	.7848
179	.4174	.0861	.7548	.4235	.0922	.7609	.4297	.0984	.4358	.7732	.1107	.4481	.7855
182	.4178	.0866	.7553	.4240	.0928	.7615	.4302	.0989	.4364	.7739	.1113	.4488	.7862
417185	68.4183	70.0871	71.7558	73.4246	75.0933	76.7620	78.4308	80.0995	83.4370	86.7745	90.1120	93.4494	96.7869
188	.4188	.0876	.7563	.4251	.0938	.7626	.4313	.1001	.4376	.7751	.1126	.4501	.7876
191	.4193	.0881	.7569	.4256	.0944	.7631	.4319	.1007	.4382	.7757	.1133	.4508	.7883
194	.4198	.0886	.7574	.4261	.0949	.7637	.4325	.1012	.4388	.7764	.1139	.4515	.7890
197	.4203	.0891	.7579	.4267	.0955	.7642	.4330	.1018	.4394	.7770	.1146	.4521	.7897
417200	68.4208	70.0896	71.7584	73.4272	75.0960	76.7648	78.4336	80.1024	83.4400	86.7776	90.1152	93.4528	96.7904

HARMONICS

BASIC FREQ.	112	116	120	124	128	132	136	140	144	148	152	156	160
417200	46.7264	48.3952	50.0640	51.7328	53.4016	55.0704	56.7392	58.4080	60.0768	61.7456	63.4144	65.0832	66.7520
203	.7267	.3955	.0644	.7332	.4020	.0708	.7396	.4084	.0772	.7460	.4149	.0837	.7525
206	.7271	.3959	.0647	.7335	.4024	.0712	.7400	.4088	.0777	.7465	.4153	.0841	.7530
209	.7274	.3962	.0651	.7339	.4028	.0716	.7404	.4093	.0781	.7469	.4158	.0846	.7534
212	.7277	.3966	.0654	.7343	.4031	.0720	.7408	.4097	.0785	.7474	.4162	.0851	.7539
417215	46.7281	48.3969	50.0658	51.7347	53.4035	55.0724	56.7412	58.4101	60.0790	61.7478	63.4167	65.0855	66.7544
218	.7284	.3973	.0662	.7350	.4039	.0728	.7416	.4105	.0794	.7483	.4171	.0860	.7549
221	.7288	.3976	.0665	.7354	.4043	.0732	.7421	.4109	.0798	.7487	.4176	.0865	.7554
224	.7291	.3980	.0669	.7358	.4047	.0736	.7425	.4114	.0803	.7492	.4180	.0869	.7558
227	.7294	.3983	.0672	.7361	.4051	.0740	.7429	.4118	.0807	.7496	.4185	.0874	.7563
417230	46.7298	48.3987	50.0676	51.7365	53.4054	55.0744	56.7433	58.4122	60.0811	61.7500	63.4190	65.0879	66.7568
233	.7301	.3990	.0680	.7369	.4058	.0748	.7437	.4126	.0816	.7505	.4194	.0883	.7573
236	.7304	.3994	.0683	.7373	.4062	.0752	.7441	.4130	.0820	.7509	.4199	.0888	.7578
239	.7308	.3997	.0687	.7376	.4066	.0755	.7445	.4135	.0824	.7514	.4203	.0893	.7582
242	.7311	.4001	.0690	.7380	.4070	.0759	.7449	.4139	.0828	.7518	.4208	.0898	.7587
417245	46.7314	48.4004	50.0694	51.7384	53.4074	55.0763	56.7453	58.4143	60.0833	61.7523	63.4212	65.0902	66.7592
248	.7318	.4008	.0698	.7388	.4077	.0767	.7457	.4147	.0837	.7527	.4217	.0907	.7597
251	.7321	.4011	.0701	.7391	.4081	.0771	.7461	.4151	.0841	.7531	.4222	.0912	.7602
254	.7324	.4015	.0705	.7395	.4085	.0775	.7465	.4156	.0846	.7536	.4226	.0916	.7606
257	.7328	.4018	.0708	.7399	.4089	.0779	.7470	.4160	.0850	.7540	.4231	.0921	.7611
417260	46.7331	48.4022	50.0712	51.7402	53.4093	55.0783	56.7474	58.4164	60.0854	61.7545	63.4235	65.0926	66.7616
263	.7335	.4025	.0716	.7406	.4097	.0787	.7478	.4168	.0859	.7549	.4240	.0930	.7621
266	.7338	.4029	.0719	.7410	.4100	.0791	.7482	.4172	.0863	.7554	.4244	.0935	.7626
269	.7341	.4032	.0723	.7414	.4104	.0795	.7486	.4177	.0867	.7558	.4249	.0940	.7630
272	.7345	.4036	.0726	.7417	.4108	.0799	.7490	.4181	.0872	.7563	.4253	.0944	.7635
417275	46.7348	48.4039	50.0730	51.7421	53.4112	55.0803	56.7494	58.4185	60.0876	61.7567	63.4258	65.0949	66.7640
278	.7351	.4042	.0734	.7425	.4116	.0807	.7498	.4189	.0880	.7571	.4263	.0954	.7645
281	.7355	.4046	.0737	.7428	.4120	.0811	.7502	.4193	.0885	.7576	.4267	.0958	.7650
284	.7358	.4049	.0741	.7432	.4124	.0815	.7506	.4198	.0889	.7580	.4272	.0963	.7654
287	.7361	.4053	.0744	.7436	.4127	.0819	.7510	.4202	.0893	.7585	.4276	.0968	.7659
417290	46.7365	48.4056	50.0748	51.7440	53.4131	55.0823	56.7514	58.4206	60.0898	61.7589	63.4281	65.0972	66.7664
293	.7368	.4060	.0752	.7443	.4135	.0827	.7518	.4210	.0902	.7594	.4285	.0977	.7669
296	.7372	.4063	.0755	.7447	.4139	.0831	.7523	.4214	.0906	.7598	.4290	.0982	.7674
299	.7375	.4067	.0759	.7451	.4143	.0835	.7527	.4219	.0911	.7603	.4294	.0986	.7678
302	.7378	.4070	.0762	.7454	.4147	.0839	.7531	.4223	.0915	.7607	.4299	.0991	.7683
417305	46.7382	48.4074	50.0766	51.7458	53.4150	55.0843	56.7535	58.4227	60.0919	61.7611	63.4304	65.0996	66.7688
308	.7385	.4077	.0770	.7462	.4154	.0847	.7539	.4231	.0924	.7616	.4308	.1000	.7693
311	.7388	.4081	.0773	.7466	.4158	.0851	.7543	.4235	.0928	.7620	.4313	.1005	.7698
314	.7392	.4084	.0777	.7469	.4162	.0854	.7547	.4240	.0932	.7625	.4317	.1010	.7702
317	.7395	.4088	.0780	.7473	.4166	.0858	.7551	.4244	.0936	.7629	.4322	.1015	.7707
417320	46.7398	48.4091	50.0784	51.7477	53.4170	55.0862	56.7555	58.4248	60.0941	61.7634	63.4326	65.1019	66.7712
323	.7402	.4095	.0788	.7481	.4173	.0866	.7559	.4252	.0945	.7638	.4331	.1024	.7717
326	.7405	.4098	.0791	.7484	.4177	.0870	.7563	.4256	.0949	.7642	.4336	.1029	.7722
329	.7408	.4102	.0795	.7488	.4181	.0874	.7567	.4261	.0954	.7647	.4340	.1033	.7726
332	.7412	.4105	.0798	.7492	.4185	.0878	.7572	.4265	.0958	.7651	.4345	.1038	.7731
417335	46.7415	48.4109	50.0802	51.7495	53.4189	55.0882	56.7576	58.4269	60.0962	61.7656	63.4349	65.1043	66.7736
338	.7419	.4112	.0806	.7499	.4193	.0886	.7580	.4273	.0967	.7660	.4354	.1047	.7741
341	.7422	.4116	.0809	.7503	.4196	.0890	.7584	.4277	.0971	.7665	.4358	.1052	.7746
344	.7425	.4119	.0813	.7507	.4200	.0894	.7588	.4282	.0975	.7669	.4363	.1057	.7750
347	.7429	.4123	.0816	.7510	.4204	.0898	.7592	.4286	.0980	.7674	.4367	.1061	.7755
417350	46.7432	48.4126	50.0820	51.7514	53.4208	55.0902	56.7596	58.4290	60.0984	61.7678	63.4372	65.1066	66.7760
353	.7435	.4129	.0824	.7518	.4212	.0906	.7600	.4294	.0988	.7682	.4377	.1071	.7765
356	.7439	.4133	.0827	.7521	.4216	.0910	.7604	.4298	.0993	.7687	.4381	.1075	.7770
359	.7442	.4136	.0831	.7525	.4220	.0914	.7608	.4303	.0997	.7691	.4386	.1080	.7774
362	.7445	.4140	.0834	.7529	.4223	.0918	.7612	.4307	.1001	.7696	.4390	.1085	.7779
417365	46.7449	48.4143	50.0838	51.7533	53.4227	55.0922	56.7616	58.4311	60.1006	61.7700	63.4395	65.1089	66.7784
368	.7452	.4147	.0842	.7536	.4231	.0926	.7620	.4315	.1010	.7705	.4399	.1094	.7789
371	.7456	.4150	.0845	.7540	.4235	.0930	.7625	.4319	.1014	.7709	.4404	.1099	.7794
374	.7459	.4154	.0849	.7544	.4239	.0934	.7629	.4324	.1019	.7714	.4408	.1103	.7798
377	.7462	.4157	.0852	.7547	.4243	.0938	.7633	.4328	.1023	.7718	.4413	.1108	.7803
417380	46.7466	48.4161	50.0856	51.7551	53.4246	55.0942	56.7637	58.4332	60.1027	61.7722	63.4428	65.1113	66.7808
383	.7469	.4164	.0860	.7555	.4250	.0946	.7641	.4336	.1032	.7727	.4422	.1117	.7813
386	.7472	.4168	.0863	.7559	.4254	.0950	.7645	.4340	.1036	.7731	.4427	.1122	.7818
389	.7476	.4171	.0867	.7562	.4258	.0953	.7649	.4345	.1040	.7736	.4431	.1127	.7822
392	.7679	.4175	.0870	.7566	.4262	.0957	.7653	.4349	.1044	.7740	.4436	.1132	.7827
417395	46.7482	48.4178	50.0874	51.7570	53.4266	55.0961	56.7657	58.4353	60.1049	61.7745	63.4440	65.1136	66.7832
398	.7486	.4182	.0878	.7574	.4269	.0965	.7661	.4357	.1053	.7749	.4445	.1141	.7837
401	.7489	.4185	.0881	.7577	.4273	.0969	.7665	.4361	.1057	.7753	.4450	.1146	.7842
404	.7492	.4189	.0885	.7581	.4277	.0973	.7669	.4366	.1062	.7758	.4454	.1150	.7846
407	.7496	.4192	.0888	.7585	.4281	.0977	.7674	.4370	.1066	.7762	.4459	.1155	.7851
417410	46.7499	48.4196	50.0892	51.7588	53.4285	55.0981	56.7678	58.4374	60.1070	61.7767	63.4463	65.1160	66.7856
413	.7503	.4199	.0896	.7592	.4289	.0985	.7682	.4378	.1075	.7771	.4468	.1164	.7861
416	.7506	.4203	.0899	.7596	.4292	.0989	.7686	.4382	.1079	.7776	.4472	.1169	.7866
419	.7509	.4206	.0903	.7600	.4296	.0993	.7690	.4387	.1083	.7780	.4477	.1174	.7870
422	.7513	.4210	.0906	.7603	.4300	.0997	.7694	.4391	.1088	.7785	.4481	.1178	.7875
417425	46.7516	48.4213	50.0910	51.7607	53.4304	55.1001	56.7698	58.4395	60.1092	61.7789	63.4486	65.1183	66.7880
428	.7519	.4216	.0914	.7611	.4308	.1005	.7702	.4399	.1096	.7793	.4491	.1188	.7885
431	.7523	.4220	.0917	.7614	.4312	.1009	.7706	.4403	.1101	.7798	.4495	.1192	.7890
434	.7526	.4223	.0921	.7618	.4316	.1013	.7710	.4408	.1105	.7802	.4500	.1197	.7894
437	.7529	.4227	.0924	.7622	.4319	.1017	.7714	.4412	.1109	.7807	.4504	.1202	.7899
417440	46.7533	48.4230	50.0928	51.7626	53.4323	55.1021	56.7718	58.4416	60.1114	61.7811	63.4509	65.1206	66.7904
443	.7536	.4234	.0932	.7629	.4327	.1025	.7722	.4420	.1118	.7816	.4513	.1211	.7909
446	.7540	.4237	.0935	.7633	.4331	.1029	.7727	.4424	.1122	.7820	.4518	.1216	.7914
449	.7543	.4241	.0939	.7637	.4335	.1033	.7731	.4429	.1127	.7825	.4522	.1220	.7918
452	.7546	.4244	.0942	.7640	.4339	.1037	.7735	.4433	.1131	.7829	.4527	.1225	.7923
417455	46.7550	48.4248	50.0946	51.7644	53.4342	55.1041	56.7739	58.4437	60.1135	61.7833	63.4532	65.1230	66.7928
458	.7553	.4251	.0950	.7648	.4346	.1045	.7743	.4441	.1140	.7838	.4536	.1234	.7933
461	.7556	.4255	.0953	.7652	.4350	.1049	.7747	.4445	.1144	.7842	.4541	.1239	.7938
464	.7560	.4258	.0957	.7655	.4354	.1052	.7751	.4450	.1148	.7847	.4545	.1244	.7942
467	.7563	.4262	.0960	.7659	.4358	.1056	.7755	.4454	.1152	.7851	.4550	.1249	.7947
417470	46.7566	48.4265	50.0964	51.7663	53.4362	55.1060	56.7759	58.4458	60.1157	61.7856	63.4554	65.1253	66.7952
473	.7570	.4269	.0968	.7667	.4365	.1064	.7763	.4462	.1161	.7860	.4559	.1258	.7957
476	.7573	.4272	.0971	.7670	.4369	.1068	.7767	.4466	.1165	.7864	.4564	.1263	.7962
479	.7576	.4276	.0975	.7674	.4373	.1072	.7771	.4471	.1170	.7869	.4568	.1267	.7966
482	.7580	.4279	.0978	.7678	.4377	.1076	.7776	.4475	.1174	.7873	.4573	.1272	.7971
417485	46.7583	48.4283	50.0982	51.7681	53.4381	55.1080	56.7780	58.4479	60.1178	61.7878	63.4577	65.1277	66.7976
488	.7587	.4286	.0986	.7685	.4385	.1084	.7784	.4483	.1183	.7882	.4582	.1281	.7981
491	.7590	.4290	.0989	.7689	.4388	.1088	.7788	.4487	.1187	.7887	.4586	.1286	.7986
494	.7593	.4293	.0993	.7693	.4392	.1092	.7792	.4492	.1191	.7891	.4591	.1291	.7990
497	.7597	.4297	.0996	.7696	.4396	.1096	.7796	.4496	.1196	.7896	.4595	.1295	.7995
417500	46.7600	48.4300	50.1000	51.7700	53.4400	55.1100	56.7800	58.4500	60.1200	61.7900	63.4600	65.1300	66.8000

MEGACYCLES PER SECOND

H A R M O N I C S

BASIC FREQ.	164	168	172	176	180	184	188	192	200	208	216	224	232
417200	68.4208	70.0896	71.7584	73.4272	75.0960	76.7648	78.4336	80.1024	83.4400	86.7776	90.1152	93.4528	96.7904
203	.4213	.0901	.7589	.4277	.0965	.7654	.4342	.1030	.4406	.7782	.1158	.4535	.7911
206	.4218	.0906	.7594	.4283	.0971	.7659	.4347	.1036	.4412	.7788	.1165	.4541	.7918
209	.4223	.0911	.7599	.4288	.0976	.7665	.4353	.1041	.4418	.7795	.1171	.4548	.7925
212	.4228	.0916	.7605	.4293	.0982	.7670	.4359	.1047	.4424	.7801	.1178	.4555	.7932
417215	68.4233	70.0921	71.7610	73.4298	75.0987	76.7676	78.4364	80.1053	83.4430	86.7807	90.1184	93.4562	96.7939
218	.4238	.0926	.7615	.4304	.0992	.7681	.4370	.1059	.4436	.7813	.1191	.4568	.7946
221	.4242	.0931	.7620	.4309	.0998	.7687	.4375	.1064	.4442	.7820	.1197	.4575	.7953
224	.4247	.0936	.7625	.4314	.1003	.7692	.4381	.1070	.4448	.7826	.1204	.4582	.7960
227	.4252	.0941	.7630	.4320	.1009	.7698	.4387	.1076	.4454	.7832	.1210	.4588	.7967
417230	68.4257	70.0946	71.7636	73.4325	75.1014	76.7703	78.4392	80.1082	83.4460	86.7838	90.1217	93.4595	96.7974
233	.4262	.0951	.7641	.4330	.1019	.7709	.4398	.1087	.4466	.7845	.1223	.4602	.7981
236	.4267	.0956	.7646	.4335	.1025	.7714	.4404	.1093	.4472	.7851	.1230	.4609	.7988
239	.4272	.0962	.7651	.4341	.1030	.7720	.4409	.1099	.4478	.7857	.1236	.4615	.7994
242	.4277	.0967	.7656	.4346	.1036	.7725	.4415	.1105	.4484	.7863	.1243	.4622	.8001
417245	68.4282	70.0972	71.7661	73.4351	75.1041	76.7731	78.4421	80.1110	83.4490	86.7870	90.1249	93.4629	96.8008
248	.4287	.0977	.7667	.4356	.1046	.7736	.4426	.1116	.4496	.7876	.1256	.4636	.8015
251	.4292	.0982	.7672	.4362	.1052	.7742	.4432	.1122	.4502	.7882	.1262	.4642	.8022
254	.4297	.0987	.7677	.4367	.1057	.7747	.4438	.1128	.4508	.7888	.1269	.4649	.8029
257	.4301	.0992	.7682	.4372	.1063	.7753	.4443	.1133	.4514	.7895	.1275	.4656	.8036
417260	68.4306	70.0997	71.7687	73.4378	75.1068	76.7758	78.4449	80.1139	83.4520	86.7901	90.1282	93.4662	96.8043
263	.4311	.1002	.7692	.4383	.1073	.7764	.4454	.1145	.4526	.7907	.1288	.4669	.8050
266	.4316	.1007	.7698	.4388	.1079	.7769	.4460	.1151	.4532	.7913	.1295	.4676	.8057
269	.4321	.1012	.7703	.4393	.1084	.7775	.4466	.1156	.4538	.7920	.1301	.4683	.8064
272	.4326	.1017	.7708	.4399	.1090	.7780	.4471	.1162	.4544	.7926	.1308	.4689	.8071
417275	68.4331	70.1022	71.7713	73.4404	75.1095	76.7786	78.4477	80.1168	83.4550	86.7932	90.1314	93.4696	96.8078
278	.4336	.1027	.7718	.4409	.1100	.7792	.4483	.1174	.4556	.7938	.1320	.4703	.8085
281	.4341	.1032	.7723	.4415	.1106	.7797	.4488	.1180	.4562	.7944	.1327	.4709	.8092
284	.4346	.1037	.7728	.4420	.1111	.7803	.4494	.1185	.4568	.7951	.1333	.4716	.8099
287	.4351	.1042	.7734	.4425	.1117	.7808	.4500	.1191	.4574	.7957	.1340	.4723	.8106
417290	68.4356	70.1047	71.7739	73.4430	75.1122	76.7814	78.4505	80.1197	83.4580	86.7963	90.1346	93.4730	96.8113
293	.4361	.1052	.7744	.4436	.1127	.7819	.4511	.1203	.4586	.7969	.1353	.4736	.8120
296	.4365	.1057	.7749	.4441	.1133	.7825	.4516	.1208	.4592	.7976	.1359	.4743	.8127
299	.4370	.1062	.7754	.4446	.1138	.7830	.4522	.1214	.4598	.7982	.1366	.4750	.8134
302	.4375	.1067	.7759	.4452	.1144	.7836	.4528	.1220	.4604	.7988	.1372	.4756	.8141
417305	68.4380	70.1072	71.7765	73.4457	75.1149	76.7841	78.4533	80.1226	83.4610	86.7994	90.1379	93.4763	96.8148
308	.4385	.1077	.7770	.4462	.1154	.7847	.4539	.1231	.4616	.8001	.1385	.4770	.8155
311	.4390	.1082	.7775	.4467	.1160	.7852	.4545	.1237	.4622	.8007	.1392	.4777	.8162
314	.4395	.1088	.7780	.4473	.1165	.7858	.4550	.1243	.4628	.8013	.1398	.4783	.8168
317	.4400	.1093	.7785	.4478	.1171	.7863	.4556	.1249	.4634	.8019	.1405	.4790	.8175
417320	68.4405	70.1098	71.7790	73.4483	75.1176	76.7869	78.4562	80.1254	83.4640	86.8026	90.1411	93.4797	96.8182
323	.4410	.1103	.7796	.4488	.1181	.7874	.4567	.1260	.4646	.8032	.1418	.4804	.8189
326	.4415	.1108	.7801	.4494	.1187	.7880	.4573	.1266	.4652	.8038	.1424	.4810	.8196
329	.4420	.1113	.7806	.4499	.1192	.7885	.4579	.1272	.4658	.8044	.1431	.4817	.8203
332	.4424	.1118	.7811	.4504	.1198	.7891	.4584	.1277	.4664	.8051	.1437	.4824	.8210
417335	68.4429	70.1123	71.7816	73.4510	75.1203	76.7896	78.4590	80.1283	83.4670	86.8057	90.1444	93.4830	96.8217
338	.4434	.1128	.7821	.4515	.1208	.7902	.4595	.1289	.4676	.8063	.1450	.4837	.8224
341	.4439	.1133	.7827	.4520	.1214	.7907	.4601	.1295	.4682	.8069	.1457	.4844	.8231
344	.4444	.1138	.7832	.4525	.1219	.7913	.4607	.1300	.4688	.8076	.1463	.4851	.8238
347	.4449	.1143	.7837	.4531	.1225	.7918	.4612	.1306	.4694	.8082	.1470	.4857	.8245
417350	68.4454	70.1148	71.7842	73.4536	75.1230	76.7924	78.4618	80.1312	83.4700	86.8088	90.1476	93.4864	96.8252
353	.4459	.1153	.7847	.4541	.1235	.7930	.4624	.1318	.4706	.8094	.1482	.4871	.8259
356	.4464	.1158	.7852	.4547	.1241	.7935	.4629	.1324	.4712	.8100	.1489	.4877	.8266
359	.4469	.1163	.7857	.4552	.1246	.7941	.4635	.1329	.4718	.8107	.1495	.4884	.8273
362	.4474	.1168	.7863	.4557	.1252	.7946	.4641	.1335	.4724	.8113	.1502	.4891	.8280
417365	68.4479	70.1173	71.7868	73.4562	75.1257	76.7952	78.4646	80.1341	83.4730	86.8119	90.1508	93.4898	96.8287
368	.4484	.1178	.7873	.4568	.1262	.7957	.4652	.1347	.4736	.8125	.1515	.4904	.8294
371	.4488	.1183	.7878	.4573	.1268	.7963	.4657	.1352	.4742	.8132	.1521	.4911	.8301
374	.4493	.1188	.7883	.4578	.1273	.7968	.4663	.1358	.4748	.8138	.1528	.4918	.8308
377	.4498	.1193	.7888	.4584	.1279	.7974	.4669	.1364	.4754	.8144	.1534	.4924	.8315
417380	68.4503	70.1198	71.7894	73.4589	75.1284	76.7979	78.4674	80.1370	83.4760	86.8150	90.1541	93.4931	96.8322
383	.4508	.1203	.7899	.4594	.1289	.7985	.4680	.1375	.4766	.8157	.1547	.4938	.8329
386	.4513	.1208	.7904	.4599	.1295	.7990	.4686	.1381	.4772	.8163	.1554	.4945	.8336
389	.4518	.1214	.7909	.4605	.1300	.7996	.4691	.1387	.4778	.8169	.1560	.4951	.8342
392	.4523	.1219	.7914	.4610	.1306	.8001	.4697	.1393	.4784	.8175	.1567	.4958	.8349
417395	68.4528	70.1224	71.7919	73.4615	75.1311	76.8007	78.4703	80.1398	83.4790	86.8182	90.1573	93.4965	96.8356
398	.4533	.1229	.7925	.4620	.1316	.8012	.4708	.1404	.4796	.8188	.1580	.4972	.8363
401	.4538	.1234	.7930	.4626	.1322	.8018	.4714	.1410	.4802	.8194	.1586	.4978	.8370
404	.4543	.1239	.7935	.4631	.1327	.8023	.4720	.1416	.4808	.8200	.1593	.4985	.8377
407	.4547	.1244	.7940	.4636	.1333	.8029	.4725	.1421	.4814	.8207	.1599	.4992	.8384
417410	68.4552	70.1249	71.7945	73.4642	75.1338	76.8034	78.4731	80.1427	83.4820	86.8213	90.1606	93.4998	96.8391
413	.4557	.1254	.7950	.4647	.1343	.8040	.4736	.1433	.4826	.8219	.1612	.5005	.8398
416	.4562	.1259	.7956	.4652	.1349	.8045	.4742	.1439	.4832	.8225	.1619	.5012	.8405
419	.4567	.1264	.7961	.4657	.1354	.8051	.4748	.1444	.4838	.8232	.1625	.5019	.8412
422	.4572	.1269	.7966	.4663	.1360	.8056	.4753	.1450	.4844	.8238	.1632	.5025	.8419
417425	68.4577	70.1274	71.7971	73.4668	75.1365	76.8062	78.4759	80.1456	83.4850	86.8244	90.1638	93.5032	96.8426
428	.4582	.1279	.7976	.4673	.1370	.8068	.4765	.1462	.4856	.8250	.1644	.5039	.8433
431	.4587	.1284	.7981	.4679	.1376	.8073	.4770	.1468	.4862	.8256	.1651	.5045	.8440
434	.4592	.1289	.7986	.4684	.1381	.8079	.4776	.1473	.4868	.8263	.1657	.5052	.8447
437	.4597	.1294	.7992	.4689	.1387	.8084	.4782	.1479	.4874	.8269	.1664	.5059	.8454
417440	68.4602	70.1299	71.7997	73.4694	75.1392	76.8090	78.4787	80.1485	83.4880	86.8275	90.1670	93.5066	96.8461
443	.4607	.1304	.8002	.4700	.1397	.8095	.4793	.1491	.4886	.8281	.1677	.5072	.8468
446	.4611	.1309	.8007	.4705	.1403	.8101	.4798	.1496	.4892	.8288	.1683	.5079	.8475
449	.4616	.1314	.8012	.4710	.1408	.8106	.4804	.1502	.4898	.8294	.1690	.5086	.8482
452	.4621	.1319	.8017	.4716	.1414	.8112	.4810	.1508	.4904	.8300	.1696	.5092	.8489
417455	68.4626	70.1324	71.8023	73.4721	75.1419	76.8117	78.4815	80.1514	83.4910	86.8306	90.1703	93.5099	96.8496
458	.4631	.1329	.8028	.4726	.1424	.8123	.4821	.1519	.4916	.8313	.1709	.5106	.8503
461	.4636	.1334	.8033	.4731	.1430	.8128	.4827	.1525	.4922	.8319	.1716	.5113	.8510
464	.4641	.1340	.8038	.4737	.1435	.8134	.4832	.1531	.4928	.8325	.1722	.5119	.8516
467	.4646	.1345	.8043	.4742	.1441	.8139	.4838	.1537	.4934	.8331	.1729	.5126	.8523
417470	68.4651	70.1350	71.8048	73.4747	75.1446	76.8145	78.4844	80.1542	83.4940	86.8338	90.1735	93.5133	96.8530
473	.4656	.1355	.8054	.4752	.1451	.8150	.4849	.1548	.4946	.8344	.1742	.5140	.8537
476	.4661	.1360	.8059	.4758	.1457	.8156	.4855	.1554	.4952	.8350	.1748	.5146	.8544
479	.4666	.1365	.8064	.4763	.1462	.8161	.4861	.1560	.4958	.8356	.1755	.5153	.8551
482	.4670	.1370	.8069	.4768	.1468	.8167	.4866	.1565	.4964	.8363	.1761	.5160	.8558
417485	68.4675	70.1375	71.8074	73.4774	75.1473	76.8172	78.4872	80.1571	83.4970	86.8369	90.1768	93.5166	96.8565
488	.4680	.1380	.8079	.4779	.1478	.8178	.4877	.1577	.4976	.8375	.1774	.5173	.8572
491	.4685	.1385	.8085	.4784	.1484	.8183	.4883	.1583	.4982	.8381	.1781	.5180	.8579
494	.4690	.1390	.8090	.4789	.1489	.8189	.4889	.1588	.4988	.8388	.1787	.5187	.8586
497	.4695	.1395	.8095	.4795	.1495	.8194	.4894	.1594	.4994	.8394	.1794	.5193	.8593
417500	68.4700	70.1400	71.8100	73.4800	75.1500	76.8200	78.4900	80.1600	83.5000	86.8400	90.1800	93.5200	96.8600

MEGACYCLES PER SECOND

H A R M O N I C S

BASIC FREQ.	112	116	120	124	128	132	136	140	144	148	152	156	160
417500	46.7600	48.4300	50.1000	51.7700	53.4400	55.1100	56.7800	58.4500	60.1200	61.7900	63.4600	65.1300	66.8000
503	.7603	.4303	.1004	.7704	.4404	.1104	.7804	.4504	.1204	.7904	.4605	.1305	.8005
506	.7607	.4307	.1007	.7707	.4408	.1108	.7808	.4508	.1209	.7909	.4609	.1309	.8010
509	.7610	.4310	.1011	.7711	.4412	.1112	.7812	.4513	.1213	.7913	.4614	.1314	.8014
512	.7613	.4314	.1014	.7715	.4415	.1116	.7816	.4517	.1217	.7918	.4618	.1319	.8019
417515	46.7617	48.4317	50.1018	51.7719	53.4419	55.1120	56.7820	58.4521	60.1222	61.7922	63.4623	65.1323	66.8024
518	.7620	.4321	.1022	.7722	.4423	.1124	.7824	.4525	.1226	.7927	.4627	.1328	.8029
521	.7624	.4324	.1025	.7726	.4427	.1128	.7829	.4529	.1230	.7931	.4632	.1333	.8034
524	.7627	.4328	.1029	.7730	.4431	.1132	.7833	.4534	.1235	.7936	.4636	.1337	.8038
527	.7630	.4331	.1032	.7733	.4435	.1136	.7837	.4538	.1239	.7940	.4641	.1342	.8043
417530	46.7634	48.4335	50.1036	51.7737	53.4438	55.1140	56.7841	58.4542	60.1243	61.7944	63.4646	65.1347	66.8048
533	.7637	.4338	.1040	.7741	.4442	.1144	.7845	.4546	.1248	.7949	.4650	.1351	.8053
536	.7640	.4342	.1043	.7745	.4446	.1148	.7849	.4550	.1252	.7953	.4655	.1356	.8058
539	.7644	.4345	.1047	.7748	.4450	.1151	.7853	.4555	.1256	.7958	.4659	.1361	.8062
542	.7647	.4349	.1050	.7752	.4454	.1155	.7857	.4559	.1260	.7962	.4664	.1366	.8067
417545	46.7650	48.4352	50.1054	51.7756	53.4458	55.1159	56.7861	58.4563	60.1265	61.7967	63.4668	65.1370	66.8072
548	.7654	.4356	.1058	.7760	.4461	.1163	.7865	.4567	.1269	.7971	.4673	.1375	.8077
551	.7657	.4359	.1061	.7763	.4465	.1167	.7869	.4571	.1273	.7975	.4678	.1380	.8082
554	.7660	.4363	.1065	.7767	.4469	.1171	.7873	.4576	.1278	.7980	.4682	.1384	.8086
557	.7664	.4366	.1068	.7771	.4473	.1175	.7878	.4580	.1282	.7984	.4687	.1389	.8091
417560	46.7667	48.4370	50.1072	51.7774	53.4477	55.1179	56.7882	58.4584	60.1286	61.7989	63.4691	65.1394	66.8096
563	.7671	.4373	.1076	7778	.4481	.1183	.7886	.4588	.1291	.7993	.4696	.1398	.8101
566	.7674	.4377	.1079	.7782	.4484	.1187	.7890	.4592	.1295	.7998	.4700	.1403	.8106
569	.7677	.4380	.1083	.7786	.4488	.1191	.7894	.4597	.1299	.8002	.4705	.1408	.8110
572	.7681	.4384	.1086	.7789	.4492	.1195	.7898	.4601	.1304	.8007	.4709	.1412	.8115
417575	46.7684	48.4387	50.1090	51.7793	53.4496	55.1199	56.7902	58.4605	60.1308	61.8011	63.4714	65.1417	66.8120
578	.7687	.4390	.1094	.7797	.4500	.1203	.7906	.4609	.1312	.8015	.4719	.1422	.8125
581	.7691	.4394	.1097	.7800	.4504	.1207	.7910	.4613	.1317	.8020	.4723	.1426	.8130
584	.7694	.4397	.1101	.7804	.4508	.1211	.7914	.4618	.1321	.8024	.4728	.1431	.8134
587	.7697	.4401	.1104	.7808	.4511	.1215	.7918	.4622	.1325	.8029	.4732	.1426	.8139
417590	46.7701	48.4404	50.1108	51.7812	53.4515	55.1219	56.7922	58.4626	60.1330	61.8033	63.4737	65.1440	66.8144
593	.7704	.4408	.1112	.7815	.4519	.1223	.7926	.4630	.1334	.8038	.4741	.1445	.8149
596	.7708	.4411	.1115	.7819	.4523	.1227	.7931	.4634	.1338	.8042	.4746	.1450	.8154
599	.7711	.4415	.1119	.7823	.4527	.1231	.7935	.4639	.1343	.8047	.4750	.1454	.8158
602	.7714	.4418	.1122	.7826	.4531	.1235	.7939	.4643	.1347	.8051	.4755	.1459	.8163
417605	46.7718	48.4422	50.1126	51.7830	53.4534	55.1239	56.7943	58.4647	60.1351	61.8055	63.4760	65.1464	66.8168
608	.7721	.4425	.1130	.7834	.4538	.1243	.7947	.4651	.1356	.8060	.4764	.1468	.8173
611	.7724	.4429	.1133	.7838	.4542	.1247	.7951	.4655	.1360	.8064	.4769	.1473	.8178
614	.7728	.4432	.1137	.7841	.4546	.1250	.7955	.4660	.1364	.8069	.4773	.1478	.8182
617	.7731	.4436	.1140	.7845	.4550	.1254	.7959	.4664	.1368	.8073	.4778	.1483	.8187
417620	46.7734	48.4439	50.1144	51.7849	53.4554	55.1258	56.7963	58.4668	60.1373	61.8078	63.4782	65.1487	66.8192
623	.7738	.4443	.1148	.7853	.4557	.1262	.7967	.4672	.1377	.8082	.4787	.1492	.8197
626	.7741	.4446	.1151	.7856	.4561	.1266	.7971	.4676	.1381	.8086	.4792	.1497	.8202
629	.7744	.4450	.1155	.7860	.4565	.1270	.7975	.4681	.1386	.8091	.4796	.1501	.8206
632	.7748	.4453	.1158	.7864	.4569	.1274	.7980	.4685	.1390	.8095	.4801	.1506	.8211
417635	46.7751	48.4457	50.1162	51.7867	53.4573	55.1278	56.7984	58.4689	60.1394	61.8100	63.4805	65.1511	66.8216
638	.7755	.4460	.1166	.7871	.4577	.1282	.7988	.4693	.1399	.8104	.4810	.1515	.8221
641	.7758	.4464	.1169	.7875	.4580	.1286	.7992	.4697	.1403	.8109	.4814	.1520	.8226
644	.7761	.4467	.1173	.7879	.4584	.1290	.7996	.4702	.1407	.8113	.4819	.1525	.8230
647	.7765	.4471	.1176	.7882	.4588	.1294	.8000	.4706	.1412	.8118	.4823	.1529	.8235
417650	46.7768	48.4474	50.1180	51.7886	53.4592	55.1298	56.8004	58.4710	60.1416	61.8122	63.4828	65.1534	66.8240
653	.7771	.4477	.1184	.7890	.4596	.1302	.8008	.4714	.1420	.8126	.4833	.1539	.8245
656	.7775	.4481	.1187	.7893	.4600	.1306	.8012	.4718	.1425	.8131	.4837	.1543	.8250
659	.7778	.4484	.1191	.7897	.4604	.1310	.8016	.4723	.1429	.8135	.4842	.1548	.8254
662	.7781	.4488	.1194	.7901	.4607	.1314	.8020	.4727	.1433	.8140	.4846	.1553	.8259
417665	46.7785	48.4491	50.1198	51.7905	53.4611	55.1318	56.8024	58.4731	60.1438	61.8144	63.4851	65.1557	66.8264
668	.7788	.4495	.1202	.7908	.4615	.1322	.8028	.4735	.1442	.8149	.4855	.1562	.8269
671	.7792	.4498	.1205	.7912	.4619	.1326	.8033	.4739	.1446	.8153	.4860	.1567	.8274
674	.7795	.4502	.1209	.7916	.4623	.1330	.8037	.4744	.1451	.8158	.4864	.1571	.8278
677	.7798	.4505	.1212	.7919	.4627	.1334	.8041	.4748	.1455	.8162	.4869	.1576	.8283
417680	46.7802	48.4509	50.1216	51.7923	53.4630	55.1338	56.8045	58.4752	60.1459	61.8166	63.4874	65.1581	66.8288
683	.7805	.4512	.1220	.7927	.4634	.1342	.8049	.4756	.1464	.8171	.4878	.1585	.8293
686	.7808	.4516	.1223	.7931	.4638	.1346	.8053	.4760	.1468	.8175	.4883	.1590	.8298
689	.7812	.4519	.1227	.7934	.4642	.1349	.8057	.4765	.1472	.8180	.4887	.1595	.8302
692	.7815	.4523	.1230	.7938	.4646	.1353	.8061	.4769	.1476	.8184	.4892	.1600	8307
417695	46.7818	48.4526	50.1234	51.7942	53.4650	55.1357	56.8065	58.4773	60.1481	61.8189	63.4896	65.1604	66.8312
698	.7822	.4530	.1238	.7946	.4653	.1361	.8069	.4777	.1485	.8193	.4901	.1609	.8317
701	.7825	.4533	.1241	.7949	.4657	.1365	.8073	.4781	.1489	.8197	.4906	.1614	.8322
704	.7828	.4537	.1245	.7953	.4661	.1369	.8077	.4786	.1494	.8202	.4910	.1618	.8326
707	.7832	.4540	.1248	.7957	.4665	.1373	.8082	.4790	.1498	.8206	.4915	.1623	.8331
417710	46.7835	48.4544	50.1252	51.7960	53.4669	55.1377	56.8086	58.4794	60.1502	61.8211	63.4919	65.1628	66.8336
713	.7839	.4557	.1256	.7964	.4673	.1381	.8090	.4798	.1507	.8215	.4924	.1632	.8341
716	.7842	.4551	.1259	.7968	.4676	.1385	.8094	.4802	.1511	.8220	.4928	.1637	.8346
719	.7845	4554	.1263	.7972	.4680	.1389	.8098	.4807	.1515	.8224	.4933	.1642	.8350
722	.7849	.4558	.1266	.7975	.4684	.1393	.8102	.4811	.1520	.8229	.4937	.1646	.8355
417725	46.7852	48.4561	50.1270	51.7979	53.4688	55.1397	56.8106	58.4815	60.1524	61.8233	63.4942	65.1651	66.8360
728	.7855	.4564	.1274	.7983	.4692	.1401	.8110	.4819	.1528	.8237	.4947	.1656	.8365
731	.7859	.4568	.1277	.7986	.4696	.1405	.8114	.4823	.1533	.8242	.4951	.1660	.8370
734	.7862	.4571	.1281	.7990	.4700	.1409	.8118	.4828	.1537	.8246	.4956	.1665	.8374
737	.7865	.4575	.1284	.7994	.4703	.1413	.8122	.4832	.1541	.8251	.4960	.1670	.8379
417740	46.7869	48.4578	50.1288	51.7998	53.4707	55.1417	56.8126	58.4836	60.1546	61.8255	63.4965	65.1674	66.8384
743	.7872	.4582	.1292	.8001	.4711	.1421	.8130	.4840	.1550	.8260	.4969	.1679	.8389
746	.7876	.4585	.1295	.8005	.4715	.1425	.8135	.4844	.1554	.8264	.4974	.1684	.8394
749	.7879	.4589	.1299	.8009	.4719	.1429	.8139	.4849	.1559	.8269	.4978	.1688	.8398
752	.7882	.4592	.1302	.8012	.4723	.1433	.8143	.4853	.1563	.8273	.4983	.1693	.8403
417755	46.7886	48.4596	50.1306	51.8016	53.4726	55.1437	56.8147	58.4857	60.1567	61.8277	63.4988	65.1698	66.8408
758	.7889	.4599	.1310	.8020	.4730	.1441	.8151	.4861	.1572	.8282	.4992	.1702	.8413
761	.7892	.4603	.1313	.8024	.4734	.1445	.8155	.4865	.1576	.8286	.4997	.1707	.8418
764	.7896	.4606	.1317	.8027	.4738	.1448	.8159	.4870	.1580	.8291	.5001	.1712	.8422
767	.7899	.4610	.1320	.8031	.4742	.1452	.8163	.4874	.1584	.8295	.5006	.1717	.8427
417770	46.7902	48.4613	50.1324	51.8035	53.4746	55.1456	56.8167	58.4878	60.1589	61.8300	63.5010	65.1721	66.8432
773	.7906	.4617	.1328	.8039	.4749	.1460	.8171	.4882	.1593	.8304	.5015	.1726	.8437
776	.7909	.4620	.1331	.8042	.4753	.1464	.8175	.4886	.1597	.8308	.5020	.1731	.8442
779	.7912	.4624	.1335	.8046	.4757	.1468	.8179	.4891	.1602	.8313	.5024	.1735	.8446
782	.7916	.4627	.1338	.8050	.4761	.1472	.8184	.4895	.1606	.8317	.5029	.1740	.8451
417785	46.7919	48.4631	50.1342	51.8053	53.4765	55.1476	56.8188	58.4899	60.1610	61.8322	63.5033	65.1745	66.8456
788	.7923	.4634	.1346	.8057	.4769	.1480	.8192	.4903	.1615	.8326	.5038	.1749	.8461
791	.7926	.4638	.1349	.8061	.4772	.1484	.8196	.4907	.1619	.8331	.5042	.1754	.8466
794	.7929	.4641	.1353	.8065	.4776	.1488	.8200	.4912	.1623	.8335	.5047	.1759	.8470
797	.7933	.4645	.1356	.8068	.4780	.1492	.8204	.4916	.1628	.8340	.5051	.1763	.8475
417800	46.7936	48.4648	50.1360	51.8072	53.4784	55.1496	56.8208	58.4920	60.1632	61.8344	63.5056	65.1768	66.8480

MEGACYCLES PER SECOND

HARMONICS

BASIC FREQ.	164	168	172	176	180	184	188	192	200	208	216	224	232
417500	68.4700	70.1400	71.8100	73.4800	75.1500	76.8200	78.4900	80.1600	83.5000	86.8400	90.1800	93.5200	96.8600
503	.4605	.1405	.8105	.4805	.1505	.8206	.4906	.1606	.5006	.8406	.1806	.5207	.8607
506	.4710	.1410	.8110	.4811	.1511	.8211	.4911	.1612	.5012	.8412	.1813	.5213	.8614
509	.4715	.1415	.8115	.4816	.1516	.8217	.4917	.1617	.5018	.8419	.1819	.5220	.8621
512	.4720	.1420	.8121	.4821	.1522	.8222	.4923	.1623	.5024	.8425	.1826	.5227	.8628
417515	68.4725	70.1425	71.8126	73.4826	75.1527	76.8228	78.4928	80.1629	83.5030	86.8431	90.1832	93.5234	96.8635
518	.4730	.1430	.8131	.4832	.1532	.8233	.4934	.1635	.5036	.8437	.1839	.5240	.8642
521	.4734	.1435	.8136	.4837	.1538	.8239	.4939	.1640	.5042	.8444	.1845	.5247	.8649
524	.4739	.1440	.8141	.4842	.1543	.8244	.4945	.1646	.5048	.8450	.1852	.5254	.8656
527	.4744	.1445	.8146	.4848	.1549	.8250	.4951	.1652	.5054	.8456	.1858	.5260	.8663
417530	68.4749	70.1450	71.8152	73.4853	75.1554	76.8255	78.4956	80.1658	83.5060	86.8462	90.1865	93.5267	96.8670
533	.4754	.1455	.8157	.4858	.1559	.8261	.4962	.1663	.5066	.8469	.1871	.5274	.8677
536	.4759	.1460	.8162	.4863	.1565	.8266	.4968	.1669	.5072	.8475	.1878	.5281	.8684
539	.4764	.1466	.8167	.4869	.1570	.8272	.4973	.1675	.5078	.8481	.1884	.5287	.8690
542	.4769	.1471	.8172	.4874	.1576	.8277	.4979	.1681	.5084	.8487	.1891	.5294	.8697
417545	68.4774	70.1476	71.8177	73.4879	75.1581	76.8283	78.4985	80.1686	83.5090	86.8494	90.1897	93.5301	96.8704
548	.4779	.1481	.8183	.4884	.1586	.8288	.4990	.1692	.5096	.8500	.1904	.5308	.8711
551	.4784	.1486	.8188	.4890	.1592	.8294	.4996	.1698	.5102	.8506	.1910	.5314	.8718
554	.4789	.1491	.8193	.4895	.1597	.8299	.5002	.1704	.5108	.8512	.1917	.5321	.8725
557	.4793	.1496	.8198	.4900	.1603	.8305	.5007	.1709	.5114	.8519	.1923	.5328	.8732
417560	68.4798	70.1501	71.8203	73.4906	75.1608	76.8310	78.5013	80.1715	83.5120	86.8525	90.1930	93.5334	96.8739
563	.4803	.1506	.8208	.4911	.1613	.8316	.5018	.1721	.5126	.8531	.1936	.5341	.8746
566	.4808	.1511	.8214	.4916	.1619	.8321	.5024	.1727	.5132	.8537	.1943	.5348	.8753
569	.4813	.1516	.8219	.4921	.1624	.8327	.5030	.1732	.5138	.8544	.1949	.5355	.8760
572	.4818	.1521	.8224	.4927	.1630	.8332	.5035	.1738	.5144	.8550	.1956	.5361	.8767
417575	68.4823	70.1526	71.8229	73.4932	75.1635	76.8338	78.5041	80.1744	83.5150	86.8556	90.1962	93.5368	96.8774
578	.4828	.1531	.8234	.4937	.1640	.8344	.5047	.1750	.5156	.8562	.1968	.5375	.8781
581	.4833	.1536	.8239	.4943	.1646	.8349	.5052	.1756	.5162	.8568	.1975	.5381	.8788
584	.4838	.1541	.8244	.4948	.1651	.8355	.5058	.1761	.5168	.8575	.1981	.5388	.8795
587	.4843	.1546	.8250	.4953	.1657	.8360	.5064	.1767	.5174	.8581	.1988	.5395	.8802
417590	68.4848	70.1551	71.8255	73.4958	75.1662	76.8366	78.5069	80.1773	83.5180	86.8587	90.1994	93.5402	96.8809
593	.4853	.1556	.8260	.4964	.1667	.8371	.5075	.1779	.5186	.8593	.2001	.5408	.8816
596	.4857	.1561	.8265	.4969	.1673	.8377	.5080	.1784	.5192	.8600	.2007	.5415	.8823
599	.4862	.1566	.8270	.4974	.1678	.8382	.5086	.1790	.5198	.8606	.2014	.5422	.8830
602	.4867	.1571	.8275	.4980	.1684	.8388	.5092	.1796	.5204	.8612	.2020	.5428	.8837
417605	68.4872	70.1576	71.8281	73.4985	75.1689	76.8393	78.5097	80.1802	83.5210	86.8618	90.2027	93.5435	96.8844
608	.4877	.1581	.8286	.4990	.1694	.8399	.5103	.1807	.5216	.8625	.2033	.5442	.8851
611	.4882	.1586	.8291	.4995	.1700	.8404	.5109	.1813	.5222	.8631	.2040	.5449	.8858
614	.4887	.1592	.8296	.5001	.1705	.8410	.5114	.1819	.5228	.8637	.2046	.5455	.8864
617	.4892	.1597	.8301	.5006	.1711	.8415	.5120	.1825	.5234	.8643	.2053	.5462	.8871
417620	68.4897	70.1602	71.8306	73.5011	75.1716	76.8421	78.5126	80.1830	83.5240	86.8650	90.2059	93.5469	96.8878
623	.4902	.1607	.8312	.5016	.1721	.8426	.5131	.1836	.5246	.8656	.2066	.5476	.8885
626	.4907	.1612	.8317	.5022	.1727	.8432	.5137	.1842	.5252	.8662	.2072	.5482	.8892
629	.4912	.1617	.8322	.5027	.1732	.8437	.5143	.1848	.5258	.8668	.2079	.5489	.8899
632	.4916	.1622	.8327	.5032	.1738	.8443	.5148	.1853	.5264	.8675	.2085	.5496	.8906
417635	68.4921	70.1627	71.8332	73.5038	75.1743	76.8448	78.5154	80.1859	83.5270	86.8681	90.2092	93.5502	96.8913
638	.4926	.1632	.8337	.5043	.1748	.8454	.5159	.1865	.5276	.8687	.2098	.5509	.8920
641	.4931	.1637	.8343	.5048	.1754	.8459	.5165	.1871	.5282	.8693	.2105	.5516	.8927
644	.4936	.1642	.8348	.5053	.1759	.8465	.5171	.1876	.5288	.8700	.2111	.5523	.8934
647	.4941	.1647	.8353	.5059	.1765	.8470	.5176	.1882	.5294	.8706	.2118	.5529	.8941
417650	68.4946	70.1652	71.8358	73.5064	75.1770	76.8476	78.5182	80.1888	83.5300	86.8712	90.2124	93.5536	96.8948
653	.4951	.1657	.8363	.5069	.1775	.8482	.5188	.1894	.5306	.8718	.2130	.5543	.8955
656	.4956	.1662	.8368	.5075	.1781	.8487	.5193	.1900	.5312	.8724	.2137	.5549	.8962
659	.4961	.1667	.8373	.5080	.1786	.8493	.5199	.1905	.5318	.8731	.2143	.5556	.8969
662	.4966	.1672	.8379	.5085	.1792	.8498	.5205	.1911	.5324	.8737	.2150	.5563	.8976
417665	68.4971	70.1677	71.8384	73.5090	75.1797	76.8504	78.5210	80.1917	83.5330	86.8743	90.2156	93.5570	96.8983
668	.4976	.1682	.8389	.5096	.1802	.8509	.5216	.1923	.5336	.8749	.2163	.5576	.8990
671	.4980	.1687	.8394	.5101	.1808	.8515	.5221	.1928	.5342	.8756	.2169	.5583	.8997
674	.4985	.1692	.8399	.5106	.1813	.8520	.5227	.1934	.5348	.8762	.2176	.5590	.9004
677	.4990	.1697	.8404	.5112	.1819	.8526	.5233	.1940	.5354	.8768	.2182	.5596	.9011
417680	68.4995	70.1702	71.8410	73.5117	75.1824	76.8531	78.5238	80.1946	83.5360	86.8774	90.2189	93.5603	96.9018
683	.5000	.1707	.8415	.5122	.1829	.8537	.5244	.1951	.5366	.8781	.2195	.5610	.9025
686	.5005	.1712	.8420	.5127	.1835	.8542	.5250	.1957	.5372	.8787	.2202	.5617	.9032
689	.5010	.1718	.8425	.5133	.1840	.8548	.5255	.1963	.5378	.8793	.2208	.5623	.9038
692	.5015	.1723	.8430	.5138	.1846	.8553	.5261	.1969	.5384	.8799	.2215	.5630	.9045
417695	68.5020	70.1728	71.8435	73.5143	75.1851	76.8559	78.5267	80.1974	83.5390	86.8806	90.2221	93.5637	96.9052
698	.5025	.1733	.8441	.5148	.1856	.8564	.5272	.1980	.5396	.8812	.2228	.5644	.9059
701	.5030	.1738	.8446	.5154	.1862	.8570	.5278	.1986	.5402	.8818	.2234	.5650	.9066
704	.5035	.1743	.8451	.5159	.1867	.8575	.5284	.1992	.5408	.8824	.2241	.5657	.9073
707	.5039	.1748	.8456	.5164	.1873	.8581	.5289	.1997	.5414	.8831	.2247	.5664	.9080
417710	68.5044	70.1753	71.8461	73.5170	75.1878	76.8586	78.5295	80.2003	83.5420	86.8837	90.2254	93.5670	96.9087
713	.5049	.1758	.8466	.5175	.1883	.8592	.5300	.2009	.5426	.8843	.2260	.5677	.9094
716	.5054	.1763	.8472	.5180	.1889	.8597	.5306	.2015	.5432	.8849	.2267	.5684	.9101
719	.5059	.1768	.8477	.5185	.1894	.8603	.5312	.2020	.5438	.8856	.2273	.5691	.9108
722	.5064	.1773	.8482	.5191	.1900	.8608	.5317	.2026	.5444	.8862	.2280	.5697	.9115
417725	68.5069	70.1778	71.8487	73.5196	75.1905	76.8614	78.5323	80.2032	83.5450	86.8868	90.2286	93.5704	96.9122
728	.5074	.1783	.8492	.5201	.1910	.8620	.5329	.2038	.5456	.8874	.2292	.5711	.9129
731	.5079	.1788	.8497	.5207	.1916	.8625	.5334	.2044	.5462	.8880	.2299	.5717	.9136
734	.5084	.1793	.8502	.5212	.1921	.8631	.5340	.2049	.5468	.8887	.2305	.5724	.9143
737	.5089	.1798	.8508	.5217	.1927	.8636	.5346	.2055	.5474	.8893	.2312	.5731	.9150
417740	68.5094	70.1803	71.8513	73.5222	75.1932	76.8642	78.5351	80.2061	83.5480	86.8899	90.2318	93.5738	96.9157
743	.5099	.1808	.8518	.5228	.1937	.8647	.5357	.2067	.5486	.8905	.2325	.5744	.9164
746	.5103	.1813	.8523	.5233	.1943	.8653	.5362	.2072	.5492	.8912	.2331	.5751	.9171
749	.5108	.1818	.8528	.5238	.1948	.8658	.5368	.2078	.5498	.8918	.2338	.5758	.9178
752	.5113	.1823	.8533	.5244	.1954	.8664	.5374	.2084	.5504	.8924	.2344	.5764	.9185
417755	68.5118	70.1828	71.8539	73.5249	75.1959	76.8669	78.5379	80.2090	83.5510	86.8930	90.2351	93.5771	96.9192
758	.5123	.1833	.8544	.5254	.1964	.8675	.5385	.2095	.5516	.8937	.2357	.5778	.9199
761	.5128	.1838	.8549	.5259	.1970	.8680	.5391	.2101	.5522	.8943	.2364	.5785	.9206
764	.5133	.1844	.8554	.5265	.1975	.8686	.5396	.2107	.5528	.8949	.2370	.5791	.9212
767	.5138	.1849	.8559	.5270	.1981	.8691	.5402	.2113	.5534	.8955	.2377	.5798	.9219
417770	68.5143	70.1854	71.8564	73.5275	75.1986	76.8697	78.5408	80.2118	83.5540	86.8962	90.2383	93.5805	96.9226
773	.5148	.1859	.8570	.5280	.1991	.8702	.5413	.2124	.5546	.8968	.2390	.5812	.9233
776	.5153	.1864	.8575	.5286	.1997	.8708	.5419	.2130	.5552	.8974	.2396	.5818	.9240
779	.5158	.1869	.8580	.5291	.2002	.8713	.5425	.2136	.5558	.8980	.2403	.5825	.9247
782	.5162	.1874	.8585	.5296	.2008	.8719	.5430	.2141	.5564	.8987	.2409	.5832	.9254
417785	68.5167	70.1879	71.8590	73.5302	75.2013	76.8724	78.5436	80.2147	83.5570	86.8993	90.2416	93.5838	96.9261
788	.5172	.1884	.8595	.5307	.2018	.8730	.5441	.2153	.5576	.8999	.2422	.5845	.9268
791	.5177	.1889	.8601	.5312	.2024	.8735	.5447	.2159	.5582	.9005	.2429	.5852	.9275
794	.5182	.1894	.8606	.5317	.2029	.8741	.5453	.2164	.5588	.9012	.2435	.5859	.9282
797	.5187	.1899	.8611	.5323	.2035	.8746	.5458	.2170	.5594	.9018	.2442	.5865	.9289
417800	68.5192	70.1904	71.8616	73.5328	75.2040	76.8752	78.5464	80.2176	83.5600	86.9024	90.2448	93.5872	96.9296

HARMONICS

BASIC FREQ.	112	116	120	124	128	132	136	140	144	148	152	156	160
417800	46.7936	48.4648	50.1360	51.8072	53.4784	55.1496	56.8208	58.4920	60.1632	61.8344	63.5056	65.1768	66.8480
803	.7939	.4651	.1364	.8076	.4788	.1500	.8212	.4924	.1636	.8348	.5061	.1773	.8485
806	.7943	.4655	.1367	.8079	.4792	.1504	.8216	.4928	.1641	.8353	.5065	.1777	.8490
809	.7946	.4658	.1371	.8083	.4796	.1508	.8220	.4933	.1645	.8357	.5070	.1782	.8494
812	.7949	.4662	.1374	.8087	.4799	.1512	.8224	.4937	.1649	.8362	.5074	.1787	.8499
417815	46.7953	48.4665	50.1378	51.8091	53.4803	55.1516	56.8228	58.4941	60.1654	61.8366	63.5079	65.1791	66.8504
818	.7965	.4669	.1382	.8094	.4807	.1520	.8232	.4945	.1658	.8371	.5083	.1796	.8509
821	.7960	.4672	.1385	8098	.4811	.1524	.8237	.4949	.1662	.8375	.5088	.1801	.8514
824	.7963	.4676	.1389	.8102	.4815	.1528	.8241	.4954	.1667	.8380	.5092	.1805	.8518
827	.7966	.4679	.1392	.8105	.4819	.1532	.8245	.4958	.1671	.8384	.5097	.1810	.8523
417830	46.7970	48.4683	50.1396	51.8109	53.4822	55.1536	56.8249	58.4962	60.1675	61.8388	63.5102	65.1815	66.8528
833	.7973	.4686	.1400	.8113	.4826	.1540	.8253	.4966	.1680	.8393	.5106	.1819	.8533
836	.7976	.4690	.1403	.8117	.4830	.1544	.8257	.4970	.1684	.8397	.5111	.1824	.8538
839	.7980	.4693	.1407	.8120	.4834	.1547	.8261	.4975	.1688	.8402	.5115	.1829	.8542
842	.7983	.4697	.1410	.8124	.4838	.1551	.8265	.4979	.1692	.8406	.5120	.1834	.8547
417845	46.7986	48.4700	50.1414	51.8128	53.4842	55.1555	56.8269	58.4983	60.1697	61.8411	63.5124	65.1838	66.8552
848	.7990	.4704	.1418	.8132	.4845	.1559	.8273	.4987	.1701	.8415	.5129	.1843	.8557
851	.7993	.4707	.1421	.8135	.4849	.1563	.8277	.4991	.1705	.8419	.5134	.1848	.8562
854	.7996	.4711	.1425	.8139	.4853	.1577	.8281	.4996	.1710	.8424	.5138	.1852	.8566
857	.8000	.4714	.1428	.8143	.4857	.1571	.8286	.5000	.1714	.8428	.5143	.1857	.8571
417860	46.8003	48.4718	50.1432	51.8146	53.4861	55.1575	56.8290	58.5004	60.1718	61.8433	63.5147	65.1862	66.8576
863	.8007	.4721	.1436	.8150	.4865	.1579	.8294	.5008	.1723	.8437	.5152	.1866	.8581
866	.8010	.4725	.1439	.8154	.4868	.1583	.8298	.5012	.1727	.8442	.5156	.1871	.8586
869	.8013	.4728	.1443	.8158	.4872	.1587	.8302	.5017	.1731	.8446	.5161	.1876	.8590
872	.8017	.4732	.1446	.8161	.4876	.1591	.8306	.5021	.1736	.8451	.5165	.1880	.8595
417875	46.8020	48.4735	50.1450	51.8165	53.4880	55.1595	56.8310	58.5025	60.1740	61.8455	63.5170	65.1885	66.8600
878	.8023	.4738	.1454	.8169	.4884	.1599	.8314	.5029	.1744	.8459	.5175	.1890	.8605
881	.8027	.4742	.1457	.8172	.4888	.1603	.8318	.5033	.1749	.8464	.5179	.1894	.8610
884	.8030	.4745	.1461	.8176	.4892	.1607	.8322	.5038	.1753	.8468	.5184	.1899	.8614
887	.8033	.4749	.1464	.8180	.4895	.1611	.8326	.5042	.1757	.8473	.5188	.1904	.8619
417890	46.8037	48.4752	50.1468	51.8184	53.4899	55.1615	56.8330	58.5046	60.1762	61.8477	63.5193	65.1908	66.8624
893	.8040	.4756	.1472	.8187	.4903	.1619	.8334	.5050	.1766	.8482	.5197	.1913	.8629
896	.8044	.4759	.1475	.8191	.4907	.1623	.8339	.5054	.1770	.8486	.5202	.1918	.8634
899	.8047	.4763	.1479	.8195	.4911	.1627	.8343	.5059	.1775	.8491	.5206	.1922	.8638
902	.8050	.4766	.1482	.8198	.4915	.1631	.8347	.5063	.1779	.8495	.5211	.1927	.8643
417905	46.8054	48.4770	50.1486	51.8202	53.4918	55.1635	46.8351	58.5067	60.1783	61.8499	63.5216	65.1932	66.8648
908	.8057	.4773	.1490	.8206	.4922	.1639	.8355	.5071	.1788	.8504	.5220	.1936	.8653
911	.8060	.4777	.1493	.8210	.4926	.1643	.8359	.5075	.1792	.8508	.5225	.1941	.8658
914	.8064	.4780	.1497	.8213	.4930	.1646	.8363	.5080	.1796	.8513	.5229	.1946	.8662
917	.8067	.4784	.1500	.8217	.4934	.1650	.8367	.5084	.1800	.8517	.5234	.1951	.8667
417920	46.8070	48.4787	50.1504	51.8221	53.4938	55.1654	56.8371	58.5088	60.1805	61.8522	63.5238	65.1955	66.8672
923	.8074	.4791	.1508	.8225	.4941	.1658	.8375	.5092	.1809	.8526	.5243	.1960	.8677
926	.8077	.4794	.1511	.8228	.4945	.1662	.8379	.5096	.1813	.8530	.5248	.1965	.8682
929	.8080	.4798	.1515	.8232	.4949	.1666	.8383	.5101	.1818	.8535	.5252	.1969	.8686
932	.8084	.4801	.1518	.8236	.4953	.1670	.8388	.5105	.1822	.8539	.5257	.1974	.8691
417935	46.8087	48.4805	50.1522	51.8239	53.4957	55.1674	56.8392	58.5109	60.1826	61.8544	63.5261	65.1979	66.8696
938	.8091	.4808	.1526	.8243	.4961	.1678	.8396	.5113	.1831	.8548	.5266	.1983	.8701
941	.8094	.4812	.1529	.8247	.4964	.1682	.8400	.5117	.1835	.8553	.5270	.1988	.8706
944	.8097	.4815	.1533	.8251	.4968	.1686	.8404	.5122	.1839	.8557	.5275	.1993	.8710
947	.8101	.4819	.1536	.8254	.4972	.1690	.8408	.5126	.1844	.8562	.5279	.1997	.8715
417950	46.8104	48.4822	50.1540	51.8258	53.4976	55.1694	56.8412	58.5130	60.1848	61.8566	63.5284	65.2002	66.8720
953	.8107	.4825	.1544	.8262	.4980	.1698	.8416	.5134	.1852	.8570	.5289	.2007	.8725
956	.8111	.4829	.1547	.8265	.4984	.1702	.8420	.5138	.1857	.8575	.5293	.2011	.8730
959	.8114	.4832	.1551	.8269	.4988	.1706	.8424	.5143	.1861	.8579	.5298	.2016	.8734
962	.8117	.4836	.1554	.8273	.4991	.1710	.8428	.5147	.1865	.8584	.5302	.2021	.8739
417965	46.8121	48.4839	50.1558	51.8277	53.4995	55.1714	56.8432	58.5151	60.1870	61.8588	63.5307	65.2025	86.8744
968	.8124	.4843	.1562	.8280	.4999	.1718	.8436	.5155	.1874	.8593	.5311	.2030	.8749
971	.8128	.4846	.1565	.8284	.5003	.1722	.8441	.5159	.1878	.8597	.5316	.2035	.8754
974	.8131	.4850	.1569	.8288	.5007	.1726	.8445	.5164	.1883	.8602	.5320	.2039	.8758
977	.8134	.4853	.1572	.8291	.5011	.1730	.8449	.5168	.1887	.8606	.5325	.2044	.8763
417980	46.8138	48.4857	50.1576	51.8295	53.5014	55.1734	56.8453	58.5172	60.1891	61.8610	63.5330	65.2049	66.8768
983	.8141	.4860	.1580	.8299	.5018	.1738	.8457	.5176	.1896	.8615	.5334	.2053	.8773
986	.8144	.4864	.1583	.8303	.5022	.1742	.8461	.5180	.1900	.8619	.5339	.2058	.8778
989	.8148	.4867	.1587	.8306	.5026	.1745	.8465	.5185	.1904	.8624	.5343	.2063	.8782
992	.8151	.4871	.1590	.8310	.5030	.1749	.8469	.5189	.1908	.8628	.5348	.2068	.8787
417995	46.8154	48.4874	50.1594	51.8314	53.5034	55.1753	56.8473	58.5193	60.1913	61.8633	63.5352	65.2072	66.8792
998	.8158	.4878	.1598	.8318	.5037	.1757	.8477	.5197	.1917	.8637	.5357	.2077	.8797
418001	.8161	.4881	.1601	.8321	.5041	.1761	.8481	.5201	.1921	.8641	.5362	.2082	.8802
004	.8164	.4885	.1605	.8325	.5045	.1765	.8485	.5206	.1926	.8646	.5366	.2086	.8806
007	.8168	.4888	.1608	.8329	.5049	.1769	.8490	.5210	.1930	.8650	.5371	.2091	.8811
418010	46.8171	48.4892	50.1612	51.8332	53.5053	55.1773	56.8494	58.5214	60.1934	61.8655	63.5375	65.2096	66.8816
013	.8175	.4895	.1616	.8336	.5057	.1777	.8498	.5218	.1939	.8659	.5380	.2100	.8821
016	.8178	.4899	.1619	.8340	.5060	.1781	.8502	.5222	.1943	.8664	.5384	.2105	.8826
019	.8181	.4902	.1623	.8344	.5064	.1785	.8506	.5227	.1947	.8668	.5389	.2110	.8830
022	.8185	.4906	.1626	.8347	.5068	.1789	.8510	.5231	.1952	.8673	.5393	.2114	.8835
418025	46.8188	48.4909	50.1630	51.8351	53.5072	55.1793	56.8514	58.5235	60.1956	61.8677	63.5398	65.2119	66.8840
028	.8191	.4912	.1634	.8355	.5076	.1797	.8518	.5239	.1960	.8681	.5403	.2124	.8845
031	.8195	.4916	.1637	.8358	.5080	.1801	.8522	.5243	.1965	.8686	.5407	.2128	.8850
034	.8198	.4919	.1641	.8362	.5084	.1805	.8526	.5248	.1969	.8690	.5412	.2133	.8854
037	.8201	.4923	.1644	.8366	.5087	.1809	.8530	.5252	.1973	.8695	.5416	.2138	.8859
418040	46.8205	48.4926	50.1648	51.8370	53.5091	55.1813	56.8534	58.5256	60.1978	61.8699	63.5421	65.2142	66.8864
043	.8208	.4930	.1652	.8373	.5095	.1817	.8538	.5260	.1982	.8704	.5425	.2147	.8869
046	.8212	.4933	.1655	.8377	.5099	.1821	.8543	.5264	.1986	.8708	.5430	.2152	.8874
049	.8215	.4937	.1659	.8381	.5103	.1825	.8547	.5269	.1991	.8713	.5434	.2156	.8878
052	.8218	.4940	.1662	.8384	.5107	.1829	.8551	.5273	.1995	.8717	.5439	.2161	.8883
418055	46.8222	48.4944	50.1666	51.8388	53.5110	55.1833	56.8555	58.5277	60.1999	61.8721	63.5444	65.2166	66.8888
058	.8225	.4947	.1670	.8392	.5114	.1837	.8559	.5281	.2004	.8726	.5448	.2170	.8893
061	.8228	.4951	.1673	.8396	.5118	.1841	.8563	.5285	.2008	.8730	.5453	.2175	.8898
064	.8232	.4954	.1677	.8399	.5122	.1844	.8567	.5290	.2012	.8735	.5457	.2180	.8902
067	.8235	.4958	.1680	.8403	.5126	.1848	.8571	.5294	.2016	.8739	.5462	.2185	.8907
418070	46.8238	48.4961	50.1684	51.8407	53.5130	55.1852	56.8575	58.5298	60.2021	61.8744	63.5466	65.2189	66.8912
073	.8242	.4965	.1688	.8411	.5133	.1856	.8579	.5302	.2025	.8748	.5471	.2194	.8917
076	.8245	.4968	.1691	.8414	.5137	.1860	.8583	.5306	.2029	.8752	.5476	.2199	.8922
079	.8248	.4972	.1695	.8418	.5141	.1864	.8587	.5311	.2034	.8757	.5480	.2203	.8926
082	.8252	.4975	.1698	.8422	.5145	.1868	.8592	.5315	.2038	.8761	.5485	.2208	.8931
418085	46.8255	48.4979	50.1702	51.8425	53.5149	55.1872	56.8596	58.5319	60.2042	61.8766	63.5489	65.2213	66.8936
088	.8259	.4982	.1706	.8429	.5153	.1876	.8600	.5323	.2047	.8770	.5494	.2217	.8941
091	.8262	.4986	.1709	.8433	.5156	.1880	.8604	.5327	.2051	.8775	.5498	.2222	.8946
094	.8265	.4989	.1713	.8437	.5160	.1884	.8608	.5332	.2055	.8779	.5503	.2227	.8950
097	.8269	.4993	.1716	.8440	.5164	.1888	.8612	.5336	.2060	.8784	.5507	.2231	.8955
418100	46.8272	48.4996	50.1720	51.8444	53.5168	55.1892	56.8616	58.5340	60.2064	61.8788	63.5512	65.2236	66.8960

MEGACYCLES PER SECOND

HARMONICS

BASIC FREQ.	164	168	172	176	180	184	188	192	200	208	216	224	232
417800	68.5192	70.1904	71.8616	73.5328	75.2040	76.8752	78.5464	80.2176	83.5600	86.9024	90.2448	93.5872	96.9296
803	.5197	.1909	.8621	.5333	.2045	.8758	.5470	.2182	.5606	.9030	.2454	.5879	.9303
806	.5202	.1914	.8626	.5339	.2051	.8763	.5475	.2188	.5612	.9036	.2461	.5885	.9310
809	.5207	.1919	.8631	.5344	.2056	.8769	.5481	.2193	.5618	.9043	.2467	.5892	.9317
812	.5212	.1924	.8637	.5349	.2062	.8774	.5487	.2199	.5624	.9049	.2474	.5899	.9324
417815	68.5217	70.1929	71.8642	73.5354	75.2067	76.8780	78.5492	80.2205	83.5630	86.9055	90.2480	93.5906	96.9331
818	.5222	.1934	.8647	.5360	.2072	.8785	.5498	.2211	.5636	.9061	.2487	.5912	.9338
821	.5226	.1939	.8652	.5365	.2078	.8791	.5503	.2216	.5642	.9068	.2493	.5919	.9345
824	.5231	.1944	.8657	.5370	.2083	.8796	.5509	.2222	.5648	.9074	.2500	.5926	.9352
827	.5236	.1949	.8662	.5376	.2089	.8802	.5515	.2228	.5654	.9080	.2506	.5932	.9359
417830	68.5241	70.1954	71.8668	73.5381	75.2094	76.8807	78.5520	80.2234	83.5660	86.9086	90.2513	93.5939	96.9366
833	.5246	.1959	.8673	.5386	.2099	.8813	.5526	.2239	.5666	.9093	.2519	.5946	.9373
836	.5251	.1964	.8678	.5391	.2105	.8818	.5532	.2245	.5672	.9099	.2526	.5953	.9380
839	.5256	.1970	.8683	.5397	.2110	.8824	.5537	.2251	.5678	.9105	.2532	.5959	.9386
842	.5261	.1975	.8688	.5402	.2116	.8829	.5543	.2257	.5684	.9111	.2539	.5966	.9393
417845	68.5266	70.1980	71.8693	73.5407	75.2121	76.8835	78.5549	80.2262	83.5690	86.9118	90.2545	93.5973	96.9400
848	.5271	.1985	.8699	.5412	.2126	.8840	.5554	.2268	.5696	.9124	.2552	.5980	.9407
851	.5276	.1990	.8704	.5418	.2132	.8846	.5560	.2274	.5702	.9130	.2558	.5986	.9414
854	.5281	.1995	.8709	.5423	.2137	.8851	.5566	.2280	.5708	.9136	.2565	.5993	.9421
857	.5285	.2000	.8714	.5428	.2143	.8857	.5571	.2285	.5714	.9143	.2571	.6000	.9428
417860	68.5290	70.2005	71.8719	73.5434	75.2148	76.8862	78.5577	80.2291	83.5720	86.9149	90.2578	93.6006	96.9435
863	.5295	.2010	.8724	.5439	.2153	.8868	.5582	.2297	.5726	.9155	.2584	.6013	.9442
866	.5300	.2015	.8730	.5444	.2159	.8873	.5588	.2303	.5732	.9161	.2591	.6020	.9449
869	.5305	.2020	.8735	.5449	.2164	.8879	.5594	.2308	.5738	.9168	.2597	.6027	.9456
872	.5310	.2025	.8740	.5455	.2170	.8884	.5599	.2314	.5744	.9174	.2604	.6033	.9463
417875	68.5315	70.2030	71.8745	73.5460	75.2175	76.8890	78.5605	80.2320	83.5750	86.9180	90.2610	93.6040	96.9470
878	.5320	.2035	.8750	.5465	.2180	.8896	.5611	.2326	.5756	.9186	.2616	.6047	.9477
881	.5325	.2040	.8755	.5471	.2186	.8901	.5616	.2332	.5762	.9192	.2623	.6053	.9484
884	.5330	.2045	.8760	.5476	.2191	.8907	.5622	.2337	.5768	.9199	.2629	.6060	.9491
887	.5335	.2050	.8766	.5481	.2197	.8912	.5628	.2343	.5774	.9205	.2636	.6067	.9498
417890	68.5340	70.2055	71.8771	73.5486	75.2202	76.8918	78.5633	80.2349	83.5780	86.9211	90.2642	93.6074	96.9505
893	.5345	.2060	.8776	.5492	.2207	.8923	.5639	.2355	.5786	.9217	.2649	.6080	.9512
896	.5349	.2065	.8781	.5497	.2213	.8929	.5644	.2360	.5792	.9224	.2655	.6087	.9519
899	.5354	.2070	.8786	.5502	.2218	.8934	.5650	.2366	.5798	.9230	.2662	.6094	.9526
902	.5359	.2075	.8791	.5508	.2224	.8940	.5656	.2372	.5804	.9236	.2668	.6100	.9533
417905	68.5364	70.2080	71.8797	73.5513	75.2229	76.8945	78.5661	80.2378	83.5810	86.9242	90.2675	93.6107	96.9540
908	.5369	.2085	.8802	.5518	.2234	.8951	.5667	.2383	.5816	.9249	.2681	.6114	.9547
911	.5374	.2090	.8807	.5523	.2240	.8956	.5673	.2389	.5822	.9255	.2688	.6121	.9554
914	.5379	.2096	.8812	.5529	.2245	.8962	.5678	.2395	.5828	.9261	.2694	.6127	.9560
917	.5384	.2101	.8817	.5534	.2251	.8967	.5684	.2401	.5834	.9267	.2701	.6134	.9567
417920	68.5389	70.2106	71.8822	73.5539	75.2256	76.8973	78.5690	80.2406	83.5840	86.9274	90.2707	93.6141	96.9574
923	.5394	.2111	.8828	.5544	.2261	.8978	.5695	.2412	.5846	.9280	.2714	.6148	.9581
926	.5399	.2116	.8833	.5550	.2267	.8984	.5701	.2418	.5852	.9286	.2720	.6154	.9588
929	.5404	.2121	.8838	.5555	.2272	.8989	.5707	.2424	.5858	.9292	.2727	.6161	.9595
932	.5408	.2126	.8843	.5560	.2278	.8995	.5712	.2429	.5864	.9299	.2733	.6168	.9602
417935	68.5413	70.2131	71.8848	73.5566	75.2283	76.9000	78.5718	80.2435	83.5870	86.9305	90.2740	93.6174	96.9609
938	.5418	.2136	.8853	.5571	.2288	.9006	.5723	.2441	.5876	.9311	.2746	.6181	.9616
941	.5423	.2141	.8859	.5576	.2294	.9011	.5729	.2447	.5882	.9317	.2753	.6188	.9623
944	.5428	.2146	.8864	.5581	.2299	.9017	.5735	.2452	.5888	.9323	.2759	.6195	.9630
947	.5433	.2151	.8869	.5587	.2305	.9022	.5740	.2458	.5894	.9330	.2766	.6201	.9637
417950	68.5438	70.2156	71.8874	73.5592	75.2310	76.9028	78.5746	80.2464	83.5900	86.9336	90.2772	93.6208	96.9644
953	.5443	.2161	.8879	.5597	.2315	.9034	.5752	.2470	.5906	.9342	.2778	.6215	.9651
956	.5448	.2166	.8884	.5603	.2321	.9039	.5757	.2476	.5912	.9348	.2785	.6221	.9658
959	.5453	.2171	.8889	.5608	.2326	.9045	.5763	.2481	.5918	.9355	.2791	.6228	.9665
962	.5458	.2176	.8895	.5613	.2332	.9050	.5769	.2487	.5924	.9361	.2798	.6235	.9672
417965	68.5463	70.2181	71.8900	73.5618	75.2337	76.9056	78.5774	80.2493	83.5930	86.9367	90.2804	93.6242	96.9679
968	.5468	.2186	.8905	.5624	.2342	.9061	.5780	.2499	.5936	.9373	.2811	.6248	.9686
971	.5472	.2191	.8910	.5629	.2348	.9067	.5785	.2504	.5942	.9380	.2817	.6255	.9693
974	.5477	.2196	.8915	.5634	.2353	.9072	.5791	.2510	.5948	.9386	.2824	.6262	.9700
977	.5482	.2201	.8920	.5640	.2359	.9078	.5797	.2516	.5954	.9392	.2830	.6268	.9707
417980	68.5487	70.2206	71.8926	73.5645	75.2364	76.9083	78.5802	80.2522	83.5960	86.9398	90.2837	93.6275	96.9714
983	.5492	.2211	.8931	.5650	.2369	.9089	.5808	.2527	.5966	.9405	.2843	.6282	.9721
986	.5497	.2216	.8936	.5655	.2375	.9094	.5814	.2533	.5972	.9411	.2850	.6289	.9728
989	.5502	.2222	.8941	.5661	.2380	.9100	.5819	.2539	.5978	.9417	.2856	.6295	.9734
992	.5507	.2227	.8946	.5666	.2386	.9105	.5825	.2545	.5984	.9423	.2863	.6302	.9741
417995	68.5512	70.2232	71.8951	73.5671	75.2391	76.9111	78.5831	80.2550	83.5990	86.9430	90.2869	93.6309	96.9748
998	.5517	.2237	.8957	.5676	.2396	.9116	.5836	.2556	.5996	.9436	.2876	.6316	.9755
418001	.5522	.2242	.8962	.5682	.2402	.9122	.5842	.2562	.6002	.9442	.2882	.6322	.9762
004	.5527	.2247	.8967	.5687	.2407	.9127	.5848	.2568	.6008	.9448	.2889	.6329	.9769
007	.5531	.2252	.8972	.5692	.2413	.9133	.5853	.2573	.6014	.9455	.2895	.6336	.9776
418010	68.5536	70.2257	71.8977	73.5698	75.2418	76.9138	78.5859	80.2579	83.6020	86.9461	90.2902	93.6342	96.9783
013	.5541	.2262	.8982	.5703	.2423	.9144	.5864	.2585	.6026	.9467	.2908	.6349	.9790
016	.5546	.2267	.8988	.5708	.2429	.9149	.5870	.2591	.6032	.9473	.2915	.6356	.9797
019	.5551	.2272	.8993	.5713	.2434	.9155	.5876	.2596	.6038	.9480	.2921	.6363	.9804
022	.5556	.2277	.8998	.5719	.2440	.9160	.5881	.2602	.6044	.9486	.2928	.6369	.9811
418025	68.5561	70.2282	71.9003	73.5724	75.2445	76.9166	78.5887	80.2608	83.6050	86.9492	90.2934	93.6376	96.9818
028	.5566	.2287	.9008	.5729	.2450	.9172	.5893	.2614	.6056	.9498	.2940	.6383	.9825
031	.5571	.2292	.9013	.5735	.2456	.9177	.5898	.2620	.6062	.9504	.2947	.6389	.9832
034	.5576	.2297	.9018	.5740	.2461	.9183	.5904	.2625	.6068	.9511	.2953	.6396	.9839
037	.5581	.2302	.9024	.5745	.2467	.9188	.5910	.2631	.6074	.9517	.2960	.6403	.9846
418040	68.5586	70.2307	71.9029	73.5750	75.2472	76.9194	78.5915	80.2637	83.6080	86.9523	90.2966	93.6410	96.9853
043	.5591	.2312	.9034	.5756	.2477	.9199	.5921	.2643	.6086	.9529	.2973	.6416	.9860
046	.5595	.2317	.9039	.5761	.2483	.9205	.5926	.2648	.6092	.9536	.2979	.6423	.9867
049	.5600	.2322	.9044	.5766	.2488	.9210	.5932	.2654	.6098	.9542	.2986	.6430	.9874
052	.5605	.2327	.9049	.5772	.2494	.9216	.5938	.2660	.6104	.9548	.2992	.6436	.9881
418055	68.5610	70.2332	71.9055	73.5777	75.2499	76.9221	78.5943	80.2666	83.6110	86.9554	90.2999	93.6443	96.9889
058	.5615	.2337	.9060	.5782	.2504	.9227	.5949	.2671	.6116	.9561	.3005	.6450	.9895
061	.5620	.2342	.9065	.5787	.2510	.9232	.5955	.2677	.6122	.9567	.3012	.6457	.9902
064	.5625	.2348	.9070	.5793	.2515	.9238	.5960	.2683	.6128	.9573	.3018	.6463	.9908
067	.5630	.2353	.9075	.5798	.2521	.9243	.5966	.2689	.6134	.9579	.3025	.6470	.9915
418070	68.5635	70.2358	71.9080	73.5803	75.2526	78.9249	78.5972	80.2694	83.6140	86.9586	90.3031	93.6477	96.9922
073	.5640	.2363	.9086	.5808	.2531	.9254	.5977	.2700	.6146	.9592	.3038	.6484	.9929
076	.5645	.2368	.9091	.5814	.2537	.9260	.5983	.2706	.6152	.9598	.3044	.6490	.9936
079	.5650	.2373	.9096	.5819	.2542	.9265	.5989	.2712	.6158	.9604	.3051	.6497	.9943
082	.5654	.2378	.9101	.5824	.2548	.9271	.5994	.2717	.6164	.9611	.3057	.6504	.9950
418085	68.5659	70.2383	71.9106	73.5830	75.2553	76.9276	78.6000	80.2723	83.6170	86.9617	90.3064	93.6510	96.9957
088	.5664	.2388	.9111	.5835	.2558	.9282	.6005	.2729	.6176	.9623	.3070	.6517	.9964
091	.5669	.2393	.9117	.5840	.2564	.9287	.6011	.2735	.6182	.9629	.3077	.6524	.9971
094	.5674	.2398	.9122	.5845	.2569	.9293	.6017	.2740	.6188	.9636	.3083	.6531	.9978
097	.5679	.2403	.9127	.5851	.2575	.9298	.6022	.2746	.6194	.9642	.3090	.6537	.9985
418100	68.5684	70.2408	71.9132	73.5856	75.2580	76.9304	78.6028	80.2752	83.6200	86.9648	90.3096	93.6544	96.9992

MEGACYCLES PER SECOND

HARMONICS

BASIC FREQ.	112	116	120	124	128	132	136	140	144	148	152	156	160
418100	46.8272	48.4996	50.1720	51.8444	53.5168	55.1892	56.8616	58.5340	60.2064	61.8788	63.5512	65.2236	66.8960
103	.8275	.4999	.1724	.8448	.5172	.1896	.8620	.5344	.2068	.8792	.5517	.2241	.8965
106	.8279	.5003	.1727	.8451	.5176	.1900	.8624	.5348	.2073	.8797	.5521	.2245	.8970
109	.8282	.5006	.1731	.8455	.5180	.1904	.8628	.5353	.2077	.8801	.5526	.2250	.8974
112	.8285	.5010	.1734	.8459	.5183	.1908	.8632	.5357	.2081	.8806	.5530	.2255	.8979
418115	46.8289	48.5013	50.1738	51.8463	53.5187	55.1912	56.8636	58.5361	60.2086	61.8810	63.5535	65.2259	66.8984
118	.8292	.5017	.1742	.8466	.5191	.1916	.8640	.5365	.2090	.8815	.5539	.2264	.8989
121	.8296	.5020	.1745	.8470	.5195	.1920	.8645	.5369	.2094	.8819	.5544	.2269	.8994
124	.8299	.5024	.1749	.8474	.5199	.1924	.8649	.5374	.2099	.8824	.5548	.2273	.8998
127	.8302	.5027	.1752	.8477	.5203	.1928	.8653	.5378	.2103	.8828	.5553	.2278	.9003
418130	46.8306	48.5031	50.1756	51.8481	53.5206	55.1932	56.8657	58.5382	60.2107	61.8832	63.5558	65.2283	66.9008
133	.8309	.5034	.1760	.8485	.5210	.1936	.8661	.5386	.2112	.8837	.5562	.2287	.9013
136	.8312	.5038	.1763	.8489	.5214	.1940	.8665	.5390	.2116	.8841	.5567	.2292	.9018
139	.8316	.5041	.1767	.8492	.5218	.1943	.8669	.5395	.2120	.8846	.5571	.2297	.9022
142	.8319	.5045	.1770	.8496	.5222	.1947	.8673	.5399	.2124	.8850	.5576	.2302	.9027
418145	46.8322	48.5048	50.1774	51.8500	53.5226	55.1951	56.8677	58.5403	60.2129	61.8855	63.5580	65.2306	66.9032
148	.8326	.5052	.1778	.8504	.5229	.1955	.8681	.5407	.2133	.8859	.5585	.2311	.9037
151	.8329	.5055	.1781	.8507	.5233	.1959	.8685	.5411	.2137	.8863	.5590	.2316	.9042
154	.8332	.5059	.1785	.8511	.5237	.1963	.8689	.5416	.2142	.8868	.5594	.2320	.9046
157	.8336	.5062	.1788	.8515	.5241	.1967	.8694	.5420	.2146	.8872	.5599	.2325	.9051
418160	46.8339	48.5066	50.1792	51.8518	53.5245	55.1971	56.8698	58.5424	60.2150	61.8877	63.5603	65.2330	66.9056
163	.8343	.5069	.1796	.8522	.5249	.1975	.8702	.5428	.2155	.8881	.5608	.2334	.9061
166	.8346	.5073	.1799	.8526	.5252	.1979	.8706	.5432	.2159	.8886	.5612	.2339	.9066
169	.8349	.5076	.1803	.8530	.5256	.1983	.8710	.5437	.2163	.8890	.5617	.2344	.9070
172	.8353	.5080	.1806	.8533	.5260	.1987	.8714	.5441	.2168	.8895	.5621	.2348	.9075
418175	46.8356	48.5083	50.1810	51.8537	53.5264	55.1919	56.8718	58.5445	60.2172	61.8899	63.5626	65.2353	66.9080
178	.8359	.5086	.1814	.8541	.5268	.1995	.8722	.5449	.2176	.8903	.5631	.2358	.9085
181	.8363	.5090	.1817	.8544	.5272	.1999	.8726	.5453	.2181	.8908	.5635	.2362	.9090
184	.8366	.5093	.1821	.8548	.5276	.2003	.8730	.5458	.2185	.8912	.5640	.2367	.9094
187	.8369	.5097	.1824	.8552	.5279	.2007	.8734	.5462	.2189	.8917	.5644	.2372	.9099
418190	46.8373	48.5100	50.1828	51.8556	53.5283	55.2011	56.8738	58.5466	60.2194	61.8921	63.5649	65.2376	66.9104
193	.8376	.5104	.1832	.8559	.5287	.2015	.8742	.5470	.2198	.8926	.5653	.2381	.9109
196	.8380	.5107	.1835	.8563	.5291	.2019	.8747	.5474	.2202	.8930	.5658	.2386	.9114
199	.8383	.5111	.1839	.8567	.5295	.2023	.8751	.5479	.2207	.8935	.5662	.2390	.9118
202	.8386	.5114	.1842	.8570	.5299	.2027	.8755	.5483	.2211	.8939	.5667	.2395	.9123
418205	46.8390	48.5118	50.1846	51.8574	53.5302	55.2031	56.8759	58.5487	60.2215	61.8943	63.5672	65.2400	66.9128
208	.8393	.5121	.1850	.8578	.5306	.2035	.8763	.5491	.2220	.8948	.5676	.2404	.9133
211	.8396	.5125	.1853	.8582	.5310	.2039	.8767	.5495	.2224	.8952	.5681	.2409	.9138
214	.8400	.5128	.1857	.8585	.5314	.2042	.8771	.5500	.2228	.8957	.5685	.2414	.9142
217	.8403	.5132	.1860	.8589	.5318	.2046	.8775	.5504	.2232	.8961	.5690	.2419	.9147
418220	46.8406	48.5135	50.1864	51.8593	53.5322	55.2050	56.8779	58.5508	60.2237	61.8966	63.5694	65.2423	66.9152
223	.8410	.5139	.1868	.8597	.5325	.2054	.8783	.5512	.2241	.8970	.5699	.2428	.9157
226	.8413	.5142	.1871	.8600	.5329	.2058	.8787	.5516	.2245	.8974	.5704	.2433	.9162
229	.8416	.5146	.1875	.8604	.5333	.2062	.8791	.5521	.2250	.8979	.5708	.2437	.9166
232	.8420	.5149	.1878	.8608	.5337	.2066	.8796	.5525	.2254	.8983	.5713	.2442	.9171
418235	46.8423	48.5153	50.1882	51.8611	53.5341	55.2070	56.8800	58.5529	60.2258	61.8988	63.5717	65.2447	66.9176
238	.8427	.5156	.1886	.8615	.5345	.2074	.8804	.5533	.2263	.8992	.5722	.2451	.9181
241	.8430	.5160	.1889	.8619	.5348	.2078	.8808	.5537	.2267	.8997	.5726	.2456	.9186
244	.8433	.5163	.1893	.8623	.5352	.2082	.8812	.5542	.2271	.9001	.5731	.2461	.9190
247	.8437	.5167	.1896	.8626	.5356	.2086	.8816	.5546	.2276	.9006	.5735	.2465	.9195
418250	46.8440	48.5170	50.1900	51.8630	53.5360	55.2090	56.8820	58.5550	60.2280	61.9010	63.5740	65.2470	66.9200
253	.8443	.5173	.1904	.8634	.5364	.2094	.8824	.5554	.2284	.9014	.5745	.2475	.9205
256	.8447	.5177	.1907	.8637	.5368	.2098	.8828	.5558	.2289	.9019	.5749	.2479	.9210
259	.8450	.5180	.1911	.8641	.5372	.2102	.8832	.5563	.2293	.9023	.5754	.2484	.9214
262	.8453	.5184	.1914	.8645	.5375	.2106	.8836	.5567	.2297	.9028	.5758	.2489	.9219
418265	46.8457	48.5187	50.1918	51.8649	53.5379	55.2110	56.8840	58.5571	60.2302	61.9032	63.5763	65.2493	66.9224
268	.8460	.5191	.1922	.8652	.5383	.2114	.8844	.5575	.2306	.9037	.5767	.2498	.9229
271	.8464	.5194	.1925	.8656	.5387	.2118	.8849	.5579	.2310	.9041	.5772	.2503	.9234
274	.8467	.5198	.1929	.8660	.5391	.2122	.8853	.5584	.2315	.9046	.5776	.2507	.9238
277	.8470	.5201	.1932	.8663	.5395	.2126	.8857	.5588	.2319	.9050	.5781	.2512	.9243
418280	46.8474	48.5205	50.1936	51.8667	53.5398	55.2130	56.8861	58.5592	60.2323	61.9054	63.5786	65.2517	66.9248
283	.8477	.5208	.1940	.8671	.5402	.2134	.8865	.5596	.2328	.9059	.5790	.2521	.9253
286	.8480	.5212	.1943	.8675	.5406	.2138	.8869	.5600	.2332	.9063	.5795	.2526	.9258
289	.8484	.5215	.1947	.8678	.5410	.2141	.8873	.5605	.2336	.9068	.5799	.2531	.9262
292	.8487	.5219	.1950	.8682	.5414	.2145	.8877	.5609	.2340	.9072	.5804	.2536	.9267
418295	46.8490	48.5222	50.1954	51.8686	53.5418	55.2149	56.8881	58.5613	60.2345	61.9077	63.5808	65.2540	66.9272
298	.8494	.5226	.1958	.8690	.5421	.2153	.8885	.5617	.2349	.9081	.5813	.2545	.9277
301	.8497	.5229	.1961	.8693	.5425	.2157	.8889	.5621	.2353	.9085	.5818	.2550	.9282
304	.8500	.5233	.1965	.8697	.5429	.2161	.8893	.5626	.2358	.9090	.5822	.2554	.9286
307	.8504	.5236	.1968	.8701	.5433	.2165	.8898	.5630	.2362	.9094	.5827	.2559	.9291
418310	46.8507	48.5240	50.1972	51.8704	53.5437	55.2169	56.8902	58.5634	60.2366	61.9099	63.5831	65.2564	66.9296
313	.8511	.5243	.1976	.8708	.5441	.2173	.8906	.5638	.2371	.9103	.5836	.2568	.9301
316	.8514	.5247	.1979	.8712	.5444	.2177	.8910	.5642	.2375	.9108	.5840	.2573	.9306
319	.8517	.5250	.1983	.8716	.5448	.2181	.8914	.5647	.2379	.9112	.5845	.2578	.9310
322	.8521	.5254	.1986	.8719	.5452	.2185	.8918	.5651	.2384	.9117	.5849	.2582	.9315
418325	46.8524	48.5257	50.1990	51.8723	53.5456	55.2189	56.8922	58.5655	60.2388	61.9121	63.5854	65.2587	66.9320
328	.8527	.5260	.1994	.8727	.5460	.2193	.8926	.5659	.2392	.9125	.5859	.2592	.9325
331	.8531	.5264	.1997	.8730	.5464	.2197	.8930	.5663	.2397	.9130	.5863	.2596	.9330
334	.8534	.5267	.2001	.8734	.5468	.2201	.8934	.5668	.2401	.9134	.5868	.2601	.9334
337	.8537	.5271	.2004	.8738	.5471	.2205	.8938	.5672	.2405	.9139	.5872	.2606	.9339
418340	46.8541	48.5274	50.2008	51.8742	53.5475	55.2209	56.8942	58.5676	60.2410	61.9143	63.5877	65.2610	66.9344
343	.8544	.5278	.2012	.8745	.5479	.2213	.8946	.5680	.2414	.9148	.5881	.2615	.9349
346	.8548	.5281	.2015	.8749	.5483	.2217	.8951	.5684	.2418	.9152	.5886	.2620	.9354
349	.8551	.5285	.2019	.8753	.5487	.2221	.8955	.5689	.2423	.9157	.5890	.2624	.9358
352	.8554	.5288	.2022	.8756	.5491	.2225	.8959	.5693	.2427	.9161	.5895	.2629	.9363
418355	46.8558	48.5292	50.2026	51.8760	53.5494	55.2229	56.8963	58.5697	60.2431	61.9165	63.5900	65.2634	66.9368
358	.8561	.5295	.2030	.8764	.5498	.2233	.8967	.5701	.2436	.9170	.5904	.2638	.9373
361	.8564	.5299	.2033	.8768	.5502	.2237	.8971	.5705	.2440	.9174	.5909	.2643	.9378
364	.8568	.5302	.2037	.8771	.5506	.2240	.8975	.5710	.2444	.9179	.5913	.2648	.9382
367	.8571	.5306	.2040	.8775	.5510	.2244	.8979	.5714	.2448	.9183	.5918	.2653	.9387
418370	46.8574	48.5309	50.2044	51.8779	53.5514	55.2248	56.8983	58.5718	60.2453	61.9188	63.5922	65.2657	66.9392
373	.8578	.5313	.2048	.8783	.5517	.2252	.8987	.5722	.2457	.9192	.5927	.2662	.9397
376	.8581	.5316	.2051	.8786	.5521	.2256	.8991	.5726	.2461	.9196	.5932	.2667	.9402
379	.8584	.5320	.2055	.8790	.5525	.2260	.8995	.5731	.2466	.9201	.5936	.2671	.9406
382	.8588	.5323	.2058	.8794	.5529	.2264	.9000	.5735	.2470	.9205	.5941	.2676	.9411
418385	46.8591	48.5327	50.2062	51.8797	53.5533	55.2268	56.9004	58.5739	60.2474	61.9210	63.5945	65.2681	66.9416
388	.8595	.5330	.2066	.8801	.5537	.2272	.9008	.5743	.2479	.9214	.5950	.2685	.9421
391	.8598	.5334	.2069	.8805	.5540	.2276	.9012	.5747	.2483	.9219	.5954	.2690	.9426
394	.8601	.5337	.2073	.8809	.5544	.2280	.9016	.5752	.2487	.9223	.5959	.2695	.9430
397	.8605	.5341	.2076	.8812	.5548	.2284	.9020	.5756	.2492	.9228	.5963	.2699	.9435
418400	46.8608	48.5344	50.2080	51.8816	53.5552	55.2288	56.9024	58.5760	60.2496	61.9232	63.5968	65.2704	66.9440

MEGACYCLES PER SECOND

H A R M O N I C S

BASIC FREQ.	164	168	172	176	180	184	188	192	200	208	216	224	232
418100	68.5684	70.2408	71.9132	73.5856	75.2580	76.9304	78.6028	80.2752	83.6200	86.9648	90.3096	93.6544	96.9992
103	.5689	.2413	.9137	.5861	.2585	.9310	.6034	.2758	.6206	.9654	.3102	.6551	.9999
106	.5694	.2418	.9142	.5867	.2591	.9315	.6039	.2764	.6212	.9660	.3109	.6557	97.0006
109	.5699	.2423	.9147	.5872	.2596	.9321	.6045	.2769	.6218	.9667	.3115	.6564	.0013
112	.5704	.2428	.9153	.5877	.2602	.9236	.6051	.2775	.6224	.9673	.3122	.6571	.0020
418115	68.5709	70.2433	71.9158	73.5882	75.2607	76.9332	78.6056	80.2781	83.6230	86.9679	90.3128	93.6578	97.0027
118	.5714	.2438	.9163	.5888	.2612	.9337	.6062	.2787	.6236	.9685	.3135	.6584	.0034
121	.5718	.2443	.9168	.5893	.2618	.9343	.6067	.2792	.6242	.9692	.3141	.6591	.0041
124	.5723	.2448	.9173	.5898	.2623	.9348	.6073	.2798	.6248	.9698	.3148	.6598	.0048
127	.5728	.2453	.9178	.5904	.2629	.9354	.6079	.2804	.6254	.9704	.3154	.6604	.0055
418130	68.5733	70.2458	71.9184	73.5909	75.2634	76.9359	78.6084	80.2810	83.6260	86.9710	90.3161	93.6611	97.0062
133	.5738	.2463	.9189	.5914	.2639	.9365	.6090	.2815	.6266	.9717	.3167	.6618	.0069
136	.5743	.2468	.9194	.5919	.2645	.9370	.6095	.2821	.6272	.9723	.3174	.6625	.0076
139	.5748	.2474	.9199	.5925	.2650	.9376	.6101	.2827	.6278	.9729	.3180	.6631	.0082
142	.5753	.2479	.9204	.5930	.2656	.9381	.6107	.2833	.6284	.9735	.3187	.6638	.0089
418145	68.5758	70.2484	71.9209	73.5935	75.2661	76.9387	78.6113	80.2838	83.6290	86.9742	90.3193	93.6645	97.0096
148	.5763	.2489	.9215	.5940	.2666	.9392	.6118	.2844	.6296	.9748	.3200	.6652	.0103
151	.5768	.2494	.9220	.5946	.2672	.9398	.6124	.2850	.6302	.9754	.3206	.6658	.0110
154	.5773	.2499	.9225	.5951	.2677	.9403	.6130	.2856	.6308	.9760	.3213	.6665	.0117
157	.5777	.2504	.9230	.5956	.2683	.9409	.6135	.2861	.6314	.9767	.3219	.6672	.0124
418160	68.5782	70.2509	71.9235	73.5962	75.2688	76.9414	78.6141	80.2867	83.6320	86.9773	90.3226	93.6678	97.0131
163	.5787	.2514	.9240	.5967	.2693	.9420	.6146	.2873	.6326	.9779	.3232	.6685	.0138
166	.5792	.2519	.9246	.5972	.2699	.9425	.6152	.2879	.6332	.9785	.3239	.6692	.0145
169	.5797	.2524	.9251	.5977	.2704	.9431	.6158	.2884	.6338	.9792	.3245	.6699	.0152
172	.5802	.2529	.9256	.5983	.2710	.9436	.6163	.2890	.6344	.9798	.3252	.6705	.0159
418175	68.5807	70.2534	71.9261	73.5988	75.2715	76.9442	78.6169	80.2896	83.6350	86.9804	90.3258	93.6712	97.0166
178	.5812	.2539	.9266	.5993	.2720	.9448	.6175	.2902	.6356	.9810	.3264	.6719	.0173
181	.5817	.2544	.9271	.5999	.2726	.9453	.6180	.2908	.6362	.9816	.3271	.6725	.0180
184	.5822	.2549	.9276	.6004	.2731	.9459	.6186	.2913	.6368	.9823	.3277	.6732	.0187
187	.5827	.2554	.9282	.6009	.2737	.9464	.6192	.2919	.6374	.9829	.3284	.6739	.0194
418190	68.5832	70.2559	71.9287	73.6014	75.2742	76.9470	78.6197	80.2925	83.6380	86.9835	90.3290	93.6746	97.0201
193	.5837	.2564	.9292	.6020	.2747	.9475	.6203	.2931	.6386	.9841	.3297	.6752	.0208
196	.5841	.2569	.9297	.6025	.2753	.9481	.6208	.2936	.6392	.9848	.3303	.6759	.0215
199	.5846	.2574	.9302	.6030	.2758	.9486	.6214	.2942	.6398	.9854	.3310	.6766	.0222
202	.5851	.2579	.9307	.6036	.2764	.9492	.6220	.2948	.6404	.9860	.3316	.6772	.0229
418205	68.5856	70.2584	71.9313	73.6041	75.2769	76.9497	78.6225	80.2954	83.6410	86.9866	90.3323	93.6779	97.0236
208	.5861	.2589	.9318	.6046	.2774	.9503	.6231	.2959	.6416	.9873	.3329	.6786	.0243
211	.5866	.2594	.9323	.6051	.2780	.8908	.6237	.2965	.6422	.9879	.3336	.6793	.0250
214	.5871	.2600	.9328	.6057	.2785	.9514	.6242	.2971	.6428	.9885	.3342	.6799	.0256
217	.5876	.2605	.9333	.6062	.2791	.9519	.6248	.2977	.6434	.9891	.3349	.6806	.0263
418220	68.5881	70.2610	71.9338	73.6067	75.2796	76.9525	78.6254	80.2982	83.6440	86.9898	90.3355	93.6813	97.0270
223	.5886	.2615	.9344	.6072	.2801	.9530	.6259	.2988	.6446	.9904	.3362	.6820	.0277
226	.5891	.2620	.9349	.6078	.2807	.9536	.6265	.2994	.6452	.9910	.3368	.6826	.0284
229	.5896	.2625	.9354	.6083	.2812	.9541	.6271	.3000	.6458	.9916	.3375	.6833	.0291
232	.5900	.2630	.9359	.6088	.2818	.9547	.6276	.3005	.6464	.9923	.3381	.6840	.0298
418235	68.5905	70.2635	71.9364	73.6094	75.2823	76.9552	78.6282	80.3011	83.6470	86.9929	90.3388	93.6846	97.0305
238	.5910	.2640	.9369	.6099	.2828	.9558	.6287	.3017	.6476	.9935	.3394	.6853	.0312
241	.5915	.2645	.9375	.6104	.2834	.9563	.6293	.3023	.6482	.9941	.3401	.6860	.0319
244	.5920	.2650	.9380	.6109	.2839	.9569	.6299	.3028	.6488	.9948	.3406	.6867	.0326
247	.5925	.2655	.9385	.6115	.2845	.9574	.6304	.3034	.6494	.9954	.3414	.6873	.0333
418250	68.5930	70.2660	71.9390	73.6120	75.2850	76.9580	78.6310	80.3040	83.6500	86.9960	90.3420	93.6880	97.0340
253	.5935	.2665	.9395	.6125	.2855	.9586	.6316	.3046	.6506	.9966	.3426	.6887	.0347
256	.5940	.2670	.9400	.6131	.2861	.9591	.6321	.3052	.6512	.9972	.3433	.6893	.0354
259	.5945	.2675	.9405	.6136	.2866	.9597	.6237	.3057	.6518	.9979	.3439	.6900	.0361
262	.5950	.2680	.9411	.6141	.2872	.9602	.6333	.3063	.6524	.9985	.3446	.6907	.0368
418265	68.5955	70.2685	71.9416	73.6146	75.2877	76.9608	78.6338	80.3069	83.6530	86.9991	90.3452	93.6914	97.0375
268	.5960	.2690	.9421	.6152	.2882	.9613	.6344	.3075	.6536	.9997	.3459	.6920	.0382
271	.5964	.2695	.9426	.6157	.2888	.9619	.6349	.3080	.6542	87.0004	.3465	.6927	.0389
274	.5969	.2700	.9431	.6162	.2893	.9624	.6355	.3086	.6548	.0010	.3472	.6934	.0396
277	.5974	.2705	.9436	.6168	.2899	.9630	.6361	.3092	.6554	.0016	.3478	.6940	.0403
418280	68.5979	70.2710	71.9442	73.6173	75.2904	76.9635	78.6366	80.3098	83.6560	87.0022	90.3485	93.6947	97.0410
283	.5984	.2715	.9447	.6178	.2909	.9641	.6372	.3103	.6566	.0029	.3491	.6954	.0417
286	.5989	.2720	.9452	.6183	.2915	.9646	.6378	.3109	.6572	.0035	.3498	.6961	.0424
289	.5994	.2726	.9457	.6189	.2920	.9652	.6383	.3115	.6578	.0041	.3504	.6967	.0430
292	.5999	.2731	.9462	.6194	.2926	.9657	.6389	.3121	.6584	.0047	.3511	.6974	.0437
418295	68.6004	70.2736	71.9467	73.6199	75.2931	76.9663	78.6395	80.3126	83.6590	87.0054	90.3517	93.6981	97.0444
298	.6009	.2741	.9473	.6204	.2936	.9668	.6400	.3132	.6596	.0060	.3524	.6988	.0451
301	.6014	.2746	.9478	.6210	.2942	.9674	.6406	.3138	.6602	.0066	.3530	.6994	.0458
304	.6019	.2751	.9483	.6215	.2947	.9679	.6412	.3144	.6608	.0072	.3537	.7001	.0465
307	.6023	.2756	.9488	.6220	.2953	.9685	.6417	.3149	.6614	.0079	.3543	.7008	.0472
418310	68.6028	70.2761	71.9493	73.6226	75.2958	76.9690	78.6423	80.3155	83.6620	87.0085	90.3550	93.7014	97.0479
313	.6033	.2766	.9498	.6231	.2963	.9696	.6428	.3161	.6626	.0091	.3556	.7021	.0486
316	.6038	.2771	.9504	.6236	.2969	.9701	.6434	.3167	.6632	.0097	.3563	.7028	.0493
319	.6043	.2776	.9509	.6241	.2974	.9707	.6440	.3172	.6638	.0104	.3569	.7035	.0500
322	.6048	.2781	.9514	.6247	.2980	.9712	.6445	.3178	.6644	.0110	.3576	.7041	.0507
418325	68.6053	70.2786	71.9519	73.6252	75.2985	76.9718	78.6451	80.3184	83.6650	87.0116	90.3582	93.7048	97.0514
328	.6058	.2791	.9524	.6257	.2990	.9724	.6457	.3190	.6656	.0122	.3588	.7055	.0521
331	.6063	.2796	.9529	.6263	.2996	.9729	.6462	.3196	.6662	.0128	.3595	.7061	.0528
334	.6068	.2801	.9534	.6268	.3001	.9735	.6468	.3201	.6668	.0135	.3601	.7068	.0535
337	.6073	.2806	.9540	.6273	.3007	.9740	.6474	.3207	.6674	.0141	.3608	.7075	.0542
418340	68.6078	70.2811	71.9545	73.6278	75.3012	76.9746	78.6479	80.3213	83.6680	87.0147	90.3614	93.7082	97.0549
343	.6083	.2816	.9550	.6284	.3017	.9751	.6485	.3119	.6686	.0153	.3621	.7088	.0556
346	.6087	.2821	.9555	.6289	.3023	.9757	.6490	.3224	.6692	.0160	.3627	.7095	.0563
349	.6092	.2826	.9560	.6294	.3028	.9762	.6496	.3230	.6698	.0166	.3634	.7102	.0570
352	.6097	.2831	.9565	.6300	.3034	.9768	.6502	.3236	.6704	.0172	.3640	.7108	.0577
418355	68.6102	70.2836	71.9571	73.6305	75.3039	76.9773	78.6507	80.3242	83.6710	87.0178	90.3647	93.7115	97.0584
358	.6107	.2841	.9576	.6310	.3044	.9779	.6513	.3247	.6716	.0185	.3653	.7122	.0591
361	.6112	.2846	.9581	.6315	.3050	.9784	.6519	.3253	.6722	.0191	.3660	.7129	.0598
364	.6117	.2852	.9586	.6321	.3055	.9790	.6524	.3259	.6728	.0197	.3666	.7135	.0604
367	.6122	.2857	.9591	.6326	.3061	.9795	.6530	.3265	.6734	.0203	.3673	.7142	.0611
418370	68.6127	70.2862	71.9596	73.6331	75.3066	76.9801	78.6536	80.3270	83.6740	87.0210	90.3679	93.7149	97.0618
373	.6132	.2867	.9602	.6336	.3071	.9806	.6541	.3276	.6746	.0216	.3686	.7156	.0625
376	.6137	.2872	.9607	.6342	.3077	.9812	.6547	.3282	.6752	.0222	.3692	.7162	.0632
379	.6142	.2877	.9612	.6347	.3082	.9817	.6553	.3288	.6758	.0228	.3699	.7169	.0639
382	.6146	.2882	.9617	.6352	.3088	.9823	.6558	.3293	.6764	.0235	.3705	.7176	.0646
418385	68.6151	70.2887	71.9622	73.6358	75.3093	76.9828	78.6564	80.3299	83.6770	87.0241	90.3712	93.7182	97.0653
388	.6156	.2892	.9627	.6363	.3098	.9834	.6569	.3305	.6776	.0247	.3718	.7189	.0660
391	.6161	.2897	.9633	.6368	.3104	.9839	.6575	.3311	.6782	.0253	.3725	.7196	.0667
394	.6166	.2902	.9638	.6373	.3109	.9845	.6581	.3316	.6788	.0260	.3731	.7203	.0674
397	.6171	.2907	.9643	.6379	.3115	.9850	.6586	.3322	.6794	.0266	.3738	.7209	.0681
418400	68.6176	70.2912	71.9648	73.6384	75.3120	76.9856	78.6592	80.3328	83.6800	87.0272	90.3744	93.7216	97.0688

H A R M O N I C S

BASIC FREQ.	112	116	120	124	128	132	136	140	144	148	152	156	160
418400	46.8608	48.5344	50.2080	51.8816	53.5552	55.2288	56.9024	58.5760	60.2496	61.9232	63.5968	65.2704	66.9440
403	.8611	.5347	.2084	.8820	.5556	.2292	.9028	.5764	.2500	.9236	.5973	.2709	.9445
406	.8615	.5351	.2087	.8823	.5560	.2296	.9032	.5768	.2505	.9241	.5977	.2713	.9450
409	.8618	.5354	.2091	.8827	.5564	.2300	.9036	.5773	.2509	.9245	.5982	.2718	.9454
412	.8621	.5358	.2094	.8831	.5567	.2304	.9040	.5777	.2513	.9250	.5986	.2723	.9459
418415	46.8625	48.5361	50.2098	51.8835	53.5571	55.2308	56.9044	58.5781	60.2518	61.9254	63.5991	65.2727	66.9464
418	.8628	.5365	.2102	.8838	.5575	.2312	.9048	.5785	.2522	.9259	.5995	.2732	.9469
421	.8632	.5368	.2105	.8842	.5579	.2316	.9053	.5789	.2526	.9263	.6000	.2737	.9474
424	.8635	.5372	.2109	.8846	.5583	.2320	.9057	.5794	.2531	.9268	.6004	.2741	.9478
427	.8638	.5375	.2112	.8849	.5587	.2324	.9061	.5798	.2535	.9272	.6009	.2746	.9483
418430	46.8642	48.5379	50.2116	51.8853	53.5590	55.2328	56.9065	58.5802	60.2539	61.9276	63.6014	65.2751	66.9488
433	.8645	.5382	.2120	.8857	.5594	.2332	.9069	.5806	.2544	.9281	.6018	.2755	.9493
436	.8648	.5386	.2123	.8861	.5598	.2336	.9073	.5810	.2548	.9285	.6023	.2760	.9498
449	.8652	.5389	.2127	.8864	.5602	.2339	.9077	.5815	.2552	.9290	.6027	.2765	.9502
442	.8655	.5393	.2130	.8868	.5606	.2343	.9081	.5819	.2556	.9294	.6032	.2770	.9507
418445	46.8658	48.5396	50.2134	51.8872	53.5610	55.2347	56.9085	58.5823	60.2561	61.9299	63.6036	65.2774	66.9512
448	.8662	.5400	.2138	.8876	.5613	.2351	.9089	.5827	.2565	.9303	.6041	.2779	.9517
451	.8665	.5403	.2141	.8879	.5617	.2355	.9093	.5831	.2569	.9307	.6046	.2784	.9522
454	.8668	.5407	.2145	.8883	.5621	.2359	.9097	.5836	.2574	.9312	.6050	.2788	.9526
457	.8672	.5410	.2148	.8887	.5625	.2363	.9102	.5840	.2578	.9316	.6055	.2793	.9531
418460	46.8675	48.5414	50.2152	51.8890	53.5629	55.2367	56.9106	58.5844	60.2582	61.9321	63.6059	65.2898	66.9536
463	.8679	.5417	.2156	.8894	.5633	.2371	.9110	.5848	.2587	.9325	.6064	.2802	.9541
466	.8682	.5421	.2159	.8898	.5636	.2375	.9114	.5852	.2591	.9330	.6068	.2807	.9546
469	.8685	.5424	.2163	.8902	.5640	.2379	.9118	.5857	.2595	.9334	.6073	.2812	.9550
472	.8689	.5428	.2166	.8905	.5644	.2383	.9122	.5861	.2600	.9339	.6077	.2816	.9555
418475	46.8692	48.5431	50.2170	51.8909	53.5648	55.2387	56.9126	58.5865	60.2604	61.9343	63.6082	65.2921	66.9560
478	.8695	.5434	.2174	.8913	.5652	.2391	.9130	.5869	.2608	.9347	.6087	.2826	.9565
481	.8699	.5438	.2177	.8916	.5656	.2395	.9134	.5873	.2613	.9352	.6091	.2830	.9570
484	.8702	.5441	.2181	.8920	.5660	.2399	.9138	.5878	.2617	.9356	.6096	.2835	.9574
487	.8705	.5445	.2184	.8924	.5663	.2403	.9142	.5882	.2621	.9361	.6100	.2840	.9579
418490	46.8709	48.5448	50.2188	51.8928	53.5667	55.2407	56.9146	58.5886	60.2626	61.9365	63.6105	65.2844	66.9584
493	.8712	.5452	.2192	.8931	.5671	.2411	.9150	.5890	.2630	.9370	.6109	.2849	.9589
496	.8716	.5455	.2195	.8935	.5675	.2415	.9155	.5894	.2634	.9374	.6114	.2854	.9594
499	.8719	.5459	.2199	.8939	.5679	.2419	.9159	.5899	.2639	.9379	.6118	.2858	.9598
502	.8722	.5462	.2202	.8942	.5683	.2423	.9163	.5903	.2643	.9383	.6123	.2863	.9603
418505	46.8726	48.5466	50.2206	51.8946	53.5686	55.2427	56.9167	58.5907	60.2647	61.9387	63.6128	65.2868	66.9608
508	.8729	.5469	.2210	.8950	.5690	.2431	.9171	.5911	.2652	.9392	.6132	.2872	.9613
511	.8732	.5473	.2213	.8954	.5694	.2435	.9175	.5915	.2656	.9396	.6137	.2877	.9618
514	.8736	.5476	.2217	.8957	.5698	.2438	.9179	.5920	.2660	.9401	.6141	.2882	.9622
517	.8739	.5480	.2220	.8961	.5702	.2442	.9183	.5924	.2664	.9405	.6146	.2887	.9627
418520	46.8742	48.5483	50.2224	51.8965	53.5706	55.2446	56.9187	58.5928	60.2669	61.9410	63.6150	65.2891	66.9632
523	.8746	.5487	.2228	.8969	.5709	.2450	.9191	.5932	.2673	.9414	.6155	.2896	.9637
526	.8749	.5490	.2231	.8972	.5713	.2454	.9195	.5936	.2677	.9418	.6160	.2901	.9642
529	.8752	.5494	.2235	.8976	.5717	.2458	.9199	.5941	.2682	.9423	.6164	.2905	.9646
532	.8756	.5497	.2238	.8980	.5721	.2462	.9204	.5945	.2686	.9427	.6169	.2910	.9651
418535	46.8759	48.5501	50.2242	51.8983	53.5725	55.2466	56.9208	58.5949	60.2690	61.9432	63.6173	65.2915	66.9656
538	.8763	.5504	.2246	.8987	.5729	.2470	.9212	.5953	.2695	.9436	.6178	.2919	.9661
541	.8766	.5508	.2249	.8991	.5732	.2474	.9216	.5957	.2699	.9441	.6182	.2924	.9666
544	.8769	.5511	.2253	.8995	.5736	.2478	.9220	.5962	.2703	.9445	.6187	.2929	.9670
547	.8773	.5515	.2256	.8998	.5740	.2482	.9224	.5966	.2708	.9450	.6191	.2933	.9675
418550	46.8776	48.5518	50.2260	51.9002	53.5744	55.2486	56.9228	58.5970	60.2712	61.9454	63.6196	65.2938	66.9680
553	.8779	.5521	.2264	.9006	.5748	.2490	.9232	.5974	.2716	.9458	.6201	.2943	.9685
556	.8783	.5525	.2267	.9009	.5752	.2494	.9236	.5978	.2721	.9463	.6205	.2947	.9690
559	.8786	.5528	.2271	.9013	.5756	.2498	.9240	.5983	.2725	.9467	.6210	.2952	.9694
562	.8789	.5532	.2274	.9017	.5759	.2502	.9244	.5987	.2729	.9472	.6214	.2957	.9699
418565	46.8793	48.5535	50.2278	51.9021	53.5763	55.2506	56.9248	58.5991	60.2734	61.9476	63.6219	65.2961	66.9704
568	.8796	.5539	.2282	.9024	.5767	.2510	.9252	.5995	.2738	.9481	.6223	.2966	.9709
571	.8800	.5542	.2285	.9028	.5771	.2514	.9257	.5999	.2742	.9485	.6228	.2971	.9714
574	.8803	.5546	.2289	.9032	.5775	.2518	.9261	.6004	.2747	.9490	.6232	.2975	.9718
577	.8806	.5549	.2292	.9035	.5779	.2522	.9265	.6008	.2751	.9494	.6237	.2980	.9723
418580	46.8810	48.5553	50.2296	51.9039	53.5782	55.2526	56.9269	58.6012	60.2755	61.9498	63.6242	65.2985	66.9728
583	.8813	.5556	.2300	.9043	.5786	.2530	.9273	.6016	.2760	.9503	.6246	.2989	.9733
586	.8816	.5560	.2303	.9047	.5790	.2534	.9277	.6020	.2764	.9507	.6251	.2994	.9738
589	.8820	.5563	.2307	.9050	.5794	.2537	.9281	.6025	.2768	.9512	.6255	.2999	.9742
592	.8823	.5567	.2310	.9054	.5798	.2541	.9285	.6029	.2772	.9516	.6260	.3004	.9747
418595	46.8826	48.5570	50.2314	51.9058	53.5802	55.2545	56.9289	58.6033	60.2777	61.9521	63.6264	65.3008	66.9752
598	.8830	.5574	.2318	.9062	.5805	.2549	.9293	.6037	.2781	.9525	6269	.3013	.9757
601	.8833	.5577	.2321	.9065	.5809	.2553	.9297	.6041	.2785	.9529	.6274	.3018	.9762
604	.8836	.5581	.2325	.9069	.5813	.2557	.9301	.6046	.2790	.9534	.6278	.3022	.9766
607	.8840	.5584	.2328	.9073	.5817	.2561	.9306	.6050	.2794	.9538	.6283	.3027	.9771
418610	46.8843	48.5588	50.2332	51.9076	53.5821	55.2565	56.9310	58.6054	60.2798	61.9543	63.6287	65.3032	66.9776
613	.8847	.5591	.2336	.9080	.5825	.2569	.9314	.6058	.2803	.9547	.6292	.3036	.9781
616	.8850	.5595	.2339	.9084	.5828	.2573	.9318	.6062	.2807	.9552	.6296	.3041	.9786
619	.8853	.5598	.2343	.9088	.5832	.2577	.9322	.6067	.2811	.9556	.6301	.3046	.9790
622	.8857	.5602	.2346	.9091	.5836	.2581	.9326	.6071	.2816	.9561	.6305	.3050	.9795
418625	46.8860	48.5605	50.2350	51.9095	53.5840	55.2585	56.9330	58.6075	60.2820	61.9565	63.6310	65.3055	66.9800
628	.8863	.5608	.2354	.9099	.5844	.2589	.9334	.6079	.2824	.9569	.6315	.3060	.9805
631	.8867	.5612	.2357	.9102	.5848	.2593	.9338	.6083	.2829	.9574	.6319	.3064	.9810
634	.8870	.5615	.2361	.9106	.5852	.2597	.9342	.6088	.2833	.9578	.6324	.3069	.9814
637	.8873	.5619	.2364	.9110	.5855	.2601	.9346	.6092	.2837	.9583	.6328	.3074	.9819
418640	46.8877	48.5622	50.2368	51.9114	53.5859	55.2605	56.9350	58.6096	60.2842	61.9587	63.6333	65.3078	66.9824
643	.8880	.5626	.2372	.9117	.5863	.2609	.9354	.6100	.2846	.9592	.6337	.3083	.9829
646	.8884	.5629	.2375	.9121	.5867	.2613	.9359	.6104	.2850	.9596	.6342	.3088	.9834
649	.8887	.5633	.2379	.9125	.5871	.2617	.9363	.6109	.2855	.9601	.6346	.3092	.9838
652	.8890	.5636	.2382	.9128	.5875	.2621	.9367	.6113	.2859	.9605	.6351	.3097	.9843
418655	46.8894	48.5640	50.2386	51.9132	53.5878	55.2625	56.9371	58.6117	60.2863	61.9609	63.6356	65.3102	66.9848
658	.8897	.5643	.2390	.9136	.5882	.2629	.9375	.6121	.2868	.9614	.6360	.3106	.9853
661	.8900	.5647	.2393	.9140	.5886	.2633	.9379	.6125	.2872	.9618	.6365	.3111	.9858
664	.8904	.5650	.2397	.9143	.5890	.2636	.9383	.6130	.2876	.9623	.6369	.3116	.9862
667	.8907	.5654	.2400	.9147	.5894	.2640	.9387	.6134	.2880	.9627	.6374	.3121	.9867
418670	46.8910	48.5657	50.2404	51.9151	53.5898	55.2644	56.9391	58.6138	60.2885	61.9632	63.6378	65.3125	66.9872
673	.8914	.5661	.2408	.9155	.5901	.2648	.9395	.6142	.2889	.9636	.6383	.3130	.9877
676	.8917	.5664	.2411	.9158	.5905	.2652	.9399	.6146	.2893	.9640	.6388	.3135	.9882
679	.8920	.5668	.2415	.9162	.5909	.2656	.9403	.6151	.2898	.9645	.6392	.3139	.9886
682	.8924	.5671	.2418	.9166	.5913	.2660	.9408	.6155	.2902	.9649	.6397	.3144	.9891
418685	46.8927	48.5675	50.2422	51.9169	53.5917	55.2664	56.9412	58.6159	60.2906	61.9654	63.6401	65.3149	66.9896
688	.8931	.5678	.2426	.9173	.5921	.2668	.9416	.6163	.2911	.9658	.6406	.3153	.9901
691	.8934	.5682	.2429	.9177	.5924	.2672	.9420	.6167	.2915	.9663	.6410	.3158	.9906
694	.8937	.5685	.2433	.9181	.5928	.2676	.9424	.6172	.2919	.9667	.6415	.3163	.9910
697	.8941	.5689	.2436	.9184	.5932	.2680	.9428	.6176	.2924	.9672	.6419	.3167	.9915
418700	46.8944	48.5692	50.2440	51.9188	53.5936	55.2684	56.9432	58.6180	60.2928	61.9676	63.6424	65.3172	66.9920

MEGACYCLES PER SECOND

HARMONICS

BASIC FREQ.	164	168	172	176	180	184	188	192	200	208	216	224	232
418400	68.6176	70.2912	71.9648	73.6384	75.3120	76.9856	78.6592	80.3328	83.6800	87.0272	90.3744	93.7216	97.0688
403	.6181	.2917	.9653	.6389	.3125	.9862	.6598	.3334	.6806	.0278	.3750	.7223	.0695
406	.6186	.2922	.9658	.6395	.3131	.9867	.6603	.3340	.6812	.0284	.3757	.7229	.0702
409	.6191	.2927	.9663	.6400	.3136	.9873	.6609	.3345	.6818	.0291	.3763	.7236	.0709
412	.6196	.2932	.9669	.6405	.3142	.9878	.6615	.3351	.6824	.0297	.3770	.7243	.0716
418415	68.6201	70.2937	71.9674	73.6410	75.3147	76.9884	78.6620	80.3357	83.6830	87.0303	90.3776	93.7250	97.0723
418	.6206	.2942	.9679	.6416	.3152	.9889	.6626	.3363	.6836	.0309	.3783	.7256	.0730
421	.6210	.2947	.9684	.6421	.3158	.9895	.6631	.3368	.6842	.0216	.3789	.7263	.0737
424	.6215	.2952	.9689	.6426	.3163	.9900	.6637	.3374	.6848	.0322	.3796	.7270	.0744
427	.6220	.2957	.9694	.6432	.3169	.9906	.6643	.3380	.6854	.0328	.3802	.7276	.0751
418430	68.6225	70.2962	71.9700	73.6437	75.3174	76.9911	78.6648	80.3386	83.6860	87.0334	90.3809	93.7283	97.0758
433	.6230	.2967	.9705	.6442	.3179	.9917	.6654	.3391	.6866	.0341	.3815	.7290	.0765
436	.6235	.2972	.9710	.6447	.3185	.9922	.6660	.3397	.6872	.0347	.3822	.7297	.0772
439	.6240	.2978	.9715	.6453	.3190	.9928	.6665	.3403	.6878	.0353	.3828	.7303	.0778
442	.6245	.2983	.9720	.6458	.3196	.9933	.6671	.3409	.6884	.0359	.3835	.7310	.0785
418445	68.6250	70.2988	71.9725	73.6463	75.3201	76.9939	78.6677	80.3414	83.6890	87.0366	90.3841	93.7317	97.0792
448	.6255	.2993	.9731	.6468	.3206	.9944	.6682	.3420	.6896	.0372	.3848	.7324	.0799
451	.6260	.2998	.9736	.6474	.3212	.9950	.6688	.3426	.6902	.0378	.3854	.7330	.0806
454	.6265	.3003	.9741	.6479	.3217	.9955	.6694	.3432	.6908	.0384	.3861	.7337	.0813
457	.6269	.3008	.9746	.6484	.3223	.9961	.6699	.3437	.6914	.0391	.3867	.7344	.0820
418460	68.6274	70.3013	71.9751	73.6490	75.3228	76.9966	78.6705	80.3443	83.6920	87.0397	90.3874	93.7350	97.0827
463	.6279	.3018	.9756	.6495	.3233	.9972	.6710	.3449	.6926	.0403	.3880	.7357	.0834
466	.6284	.3023	.9762	.6500	.3239	.9977	.6716	.3455	.6932	.0409	.3887	.7364	.0841
469	.6289	.3028	.9767	.6505	.3244	.9983	.6722	.3460	.6938	.0416	.3893	.7371	.0848
472	.6294	.3033	.9772	.6511	.3250	.9988	.6727	.3466	.6944	.0422	.3900	.7377	.0855
418475	68.6299	70.3038	71.9777	73.6516	75.3255	76.9994	78.6733	80.3472	83.6950	87.0428	90.3906	93.7384	97.0862
478	.6304	.3043	.9782	.6521	.3260	77.0000	.6739	.3478	.6956	.0434	.3912	.7391	.0869
481	.6309	.3048	.9787	.6527	.3266	.0005	.6744	.3484	.6962	.0440	.3919	.7397	.0876
484	.6314	.3053	.9792	.6532	.3271	.0011	.6750	.3489	.6968	.0447	.3925	.7404	.0883
487	.6319	.3058	.9798	.6537	.3277	.0016	.6756	.3495	.6974	.0453	.3932	.7411	.0890
418490	68.6324	70.3063	71.9803	73.6542	75.3282	77.0022	78.6761	80.3501	83.6980	87.0459	90.3938	93.7418	97.0897
493	.6329	.3068	.9808	.6548	.3287	.0027	.6767	.3507	.6986	.0465	.3945	.7424	.0904
496	.6333	.3073	.9813	.6553	.3293	.0033	.6772	.3512	.6992	.0472	.3951	.7431	.0911
499	.6338	.3078	.9818	.6558	.3298	.0038	.6778	.3518	.6998	.0478	.3958	.7438	.0918
502	.6343	.3083	.9823	.6564	.3304	.0044	.6784	.3524	.7004	.0484	.3964	.7444	.0925
418505	68.6348	70.3088	71.9829	73.6569	75.3309	77.0049	78.6789	80.3530	83.7010	87.0490	90.3971	93.7451	97.0932
508	.6353	.3093	.9834	.6574	.3314	.0055	.6795	.3535	.7016	.0497	.3977	.7458	.0939
511	.6358	.3098	.9839	.6579	.3320	.0060	.6801	.3541	.7022	.0503	.3984	.7465	.0946
514	.6363	.3104	.9844	.6585	.3325	.0066	.6806	.3547	.7028	.0509	.3990	.7471	.0952
517	.6368	.3109	.9849	.6590	.3331	.0071	.6812	.3553	.7034	.0515	.3997	.7478	.0959
418520	68.6373	70.3114	71.9854	73.6595	75.3336	77.0077	78.6818	80.3558	83.7040	87.0522	90.4003	93.7485	97.0966
523	.6378	.3119	.9860	.6600	.3341	.0082	.6823	.3564	.7046	.0528	.4010	.7492	.0973
526	.6383	.3124	.9865	.6606	.3347	.0088	.6829	.3570	.7052	.0534	.4016	.7498	.0980
529	.6388	.3129	.9870	.6611	.3352	.0093	.6835	.3576	.7058	.0540	.4023	.7505	.0987
532	.6392	.3134	.9875	.6616	.3358	.0099	.6840	.3581	.7064	.0547	.4029	.7512	.0994
418535	68.6397	70.3139	71.9880	73.6622	75.3363	77.0104	78.6846	80.3587	83.7070	87.0553	90.4036	93.7518	97.1001
538	.6402	.3144	.9885	.6627	.3368	.0110	.6851	.3593	.7076	.0559	.4042	.7525	.1008
541	.6407	.3149	.9891	.6632	.3374	.0115	.6857	.3599	.7082	.0565	.4049	.7532	.1015
544	.6412	.3154	.9896	.6637	.3379	.0121	.6863	.3604	.7088	.0572	.4055	.7539	.1022
547	.6417	.3159	.9901	.6643	.3385	.0126	.6868	.3610	.7094	.0578	.4062	.7545	.1029
418550	68.6422	70.3164	71.9906	73.6648	75.3390	77.0132	78.6874	80.3616	83.7100	87.0584	90.4068	93.7552	97.1036
553	.6427	.3169	.9911	.6653	.3395	.0138	.6880	.3622	.7106	.0590	.4074	.7559	.1043
556	.6432	.3174	.9916	.6659	.3401	.0143	.6885	.3628	.7112	.0596	.4081	.7565	.1050
559	.6437	.3179	.9921	.6664	.3406	.0149	.6891	.3633	.7118	.0603	.4087	.7572	.1057
562	.6442	.3184	.9927	.6669	.3412	.0154	.6897	.3639	.7124	.0609	.4094	.7579	.1064
418565	68.6447	70.3189	71.9932	73.6674	75.3417	77.0160	78.6902	80.3645	83.7130	87.0615	90.4100	93.7586	97.1071
568	.6452	.3194	.9937	.6680	.3422	.0165	.6908	.3651	.7136	.0621	.4107	.7592	.1078
571	.6456	.3199	.9942	.6685	.3428	.0171	.6913	.3656	.7142	.0628	.4113	.7599	.1085
574	.6461	.3204	.9947	.6690	.3433	.0176	.6919	.3662	.7148	.0634	.4120	.7606	.1092
577	.6466	.3209	.9952	.6696	.3439	.0182	.6925	.3668	.7154	.0640	.4126	.7612	.1099
418580	68.6471	70.3214	71.9958	73.6701	75.3444	77.0187	78.6930	80.3674	83.7160	87.0646	90.4133	93.7619	97.1106
583	.6476	.3219	.9963	.6706	.3449	.0193	.6936	.3679	.7166	.0653	.4139	.7626	.1113
586	.6481	.3224	.9968	.6711	.3455	.0198	.6942	.3685	.7172	.0659	.4146	.7633	.1120
589	.6486	.3230	.9973	.6717	.3460	.0204	.6947	.3691	.7178	.0665	.4152	.7639	.1126
592	.6491	.3235	.9978	.6722	.3466	.0209	.6953	.3697	.7184	.0671	.4159	.7646	.1133
418595	68.6496	70.3240	71.9983	73.6727	75.3471	77.0215	78.6959	80.3702	83.7190	87.0678	90.4165	93.7653	97.1140
598	.6501	.3245	.9989	.6732	.3476	.0220	.6964	.3708	.7196	.0684	.4172	.7660	.1147
601	.6506	.3250	.9994	.6738	.3482	.0226	.6970	.3714	.7202	.0690	.4178	.7666	.1154
604	.6511	.3255	.9999	.6743	.3487	.0231	.6976	.3720	.7208	.0696	.4185	.7673	.1161
607	.6515	.3260	72.0004	.6748	.3493	.0237	.6981	.3725	.7214	.0703	.4191	.7680	.1168
418610	68.6520	70.3265	72.0009	73.6754	75.3498	77.0242	78.6987	80.3731	83.7220	87.0709	90.4198	93.7686	97.1175
613	.6525	.3270	.0014	.6759	.3503	.0248	.6992	.3737	.7226	.0715	.4204	.7693	.1182
616	.6530	.3275	.0020	.6764	.3509	.0253	.6998	.3743	.7232	.0721	.4211	.7700	.1189
619	.6535	.3280	.0025	.6769	.3514	.0259	.7004	.3748	.7238	.0728	.4217	.7707	.1196
622	.6540	.3285	.0030	.6775	.3520	.0264	.7009	.3754	.7244	.0734	.4224	.7713	.1203
418625	68.6545	70.3290	72.0035	73.6780	75.3525	77.0270	78.7015	80.3760	83.7250	87.0740	90.4230	93.7720	97.1210
628	.6550	.3295	.0040	.6785	.3530	.0276	.7021	.3766	.7256	.0746	.4236	.7727	.1217
631	.6555	.3300	.0045	.6791	.3536	.0281	.7026	.3772	.7262	.0752	.4243	.7733	.1224
634	.6560	.3305	.0050	.6796	.3541	.0287	.7032	.3777	.7268	.0759	.4249	.7740	.1231
637	.6565	.3310	.0056	.6801	.3547	.0292	.7038	.3783	.7274	.0765	.4256	.7747	.1238
418640	68.6570	70.3315	72.0061	73.6806	75.3552	77.0298	78.7043	80.3789	83.7280	87.0771	90.4262	93.7754	97.1245
643	.6575	.3320	.0066	.6812	.3557	.0303	.7049	.3795	.7286	.0777	.4269	.7760	.1252
646	.6579	.3325	.0071	.6817	.3563	.0309	.7054	.3800	.7292	.0784	.4275	.7767	.1259
649	.6584	.3330	.0076	.6822	.3568	.0314	.7060	.3806	.7298	.0790	.4282	.7774	.1266
652	.6589	.3335	.0081	.6828	.3574	.0320	.7066	.3812	.7304	.0796	.4288	.7780	.1273
418655	68.6594	70.3340	72.0087	73.6833	75.3579	77.0325	78.7071	80.3818	83.7310	87.0802	90.4295	93.7787	97.1280
658	.6599	.3345	.0092	.6838	.3584	.0331	.7077	.3823	.7316	.0809	.4301	.7794	.1287
661	.6604	.3350	.0097	.6843	.3590	.0336	.7083	.3829	.7322	.0815	.4308	.7801	.1294
664	.6609	.3356	.0102	.6849	.3595	.0342	.7088	.3835	.7328	.0821	.4314	.7807	.1300
667	.6614	.3361	.0107	.6854	.3601	.0347	.7094	.3841	.7334	.0827	.4321	.7814	.1307
418670	68.6619	70.3366	72.0112	73.6859	75.3606	77.0353	78.7100	80.3846	83.7340	87.0834	90.4327	93.7821	97.1314
673	.6624	.3371	.0118	.6864	.3611	.0358	.7105	.3852	.7346	.0840	.4334	.7828	.1321
676	.6629	.3376	.0123	.6870	.3617	.0364	.7111	.3858	.7352	.0846	.4340	.7834	.1328
679	.6634	.3381	.0128	.6875	.3622	.0369	.7117	.3864	.7358	.0852	.4347	.7841	.1335
682	.6638	.3386	.0133	.6880	.3628	.0375	.7122	.3869	.7364	.0859	.4353	.7848	.1342
418685	68.6643	70.3391	72.0138	73.6886	75.3633	77.0380	78.7128	80.3875	83.7370	87.0865	90.4360	93.7854	97.1349
688	.6648	.3396	.0143	.6891	.3638	.0386	.7133	.3881	.7376	.0871	.4366	.7861	.1356
691	.6653	.3401	.0149	.6896	.3644	.0391	.7139	.3887	.7382	.0877	.4373	.7868	.1363
694	.6658	.3406	.0154	.6901	.3649	.0397	.7145	.3892	.7388	.0884	.4379	.7875	.1370
697	.6663	.3411	.0159	.6907	.3655	.0402	.7150	.3898	.7394	.0890	.4386	.7881	.1377
418700	68.6668	70.3416	72.0164	73.6912	75.3660	77.0408	78.7156	80.3904	83.7400	87.0896	90.4392	93.7888	97.1384

MEGACYCLES PER SECOND

H A R M O N I C S

BASIC FREQ.	112	116	120	124	128	132	136	140	144	148	152	156	160
418700	46.8944	48.5692	50.2440	51.9188	53.5936	55.2684	56.9432	58.6180	60.2928	61.9676	63.6424	65.3172	66.9920
703	.8947	.5695	.2444	.9192	.5940	.2688	.9436	.6184	.2932	.9680	.6429	.3177	.9925
706	.8951	.5699	.2447	.9195	.5944	.2692	.9440	.6188	.2937	.9685	.6433	.3181	.9930
709	.8954	.5702	.2451	.9199	.5948	.2696	.9444	.6193	.2941	.9689	.6438	.3186	.9934
712	.8957	.5706	.2454	.9203	.5951	.2700	.9448	.6197	.2945	.9694	.6442	.3191	.9939
418715	46.8961	48.5709	50.2458	51.9207	53.5955	55.2704	56.9452	58.6201	60.2950	61.9698	62.6447	65.3195	66.9944
718	.8964	.5713	.2462	.9210	.5959	.2708	.9456	.6205	.2954	.9703	.6451	.3200	.9949
721	.8968	.5716	.2465	.9214	.5963	.2712	.9461	.6209	.2958	.9707	.6456	.3205	.9954
724	.8971	.5720	.2469	.9218	.5967	.2716	.9465	.6214	.2963	.9712	.6460	.3209	.9958
727	.8974	.5723	.2472	.9221	.5971	.2720	.9469	.6218	.2967	.9716	.6465	.3214	.9963
418730	46.8978	48.5727	50.2476	51.9225	53.5974	55.2724	56.9473	58.6222	60.2971	61.9720	63.6470	65.3219	66.9968
733	.8981	.5730	.2480	.9229	.5978	.2728	.9477	.6226	.2976	.9725	.6474	.3223	.9973
736	.8984	.5734	.2483	.9233	.5982	.2732	.9481	.6230	.2980	.9729	.6479	.3228	.9978
739	.8988	.5737	.2487	.9236	.5986	.2735	.9485	.6235	.2984	.9734	.6483	.3233	.9982
742	.8991	.5741	.2490	.9240	.5990	.2739	.9489	.6239	.2988	.9738	.6488	.3238	.9987
418745	46.8994	48.5744	50.2494	51.9244	53.5994	55.2743	56.9493	58.6243	60.2993	61.9743	63.6492	65.3242	66.9992
748	.8998	.5748	.2498	.9248	.5997	.2747	.9497	.6247	.2997	.9747	.6497	.3247	.9997
751	.9001	.5751	.2501	.9251	.6001	.2751	.9501	.6251	.3001	.9751	.6502	.3252	67.0002
754	.9004	.5755	.2505	.9255	.6005	.2755	.9505	.6256	.3006	.9756	.6506	.3256	.0006
757	.9008	.5758	.2508	.9259	.6009	.2759	.9510	.6260	.3010	.9760	.6511	.3261	.0011
418760	46.9011	48.5762	50.2512	51.9262	53.6013	55.2763	56.9514	58.6264	60.3014	61.9765	63.6515	65.3266	67.0016
763	.9015	.5765	.2516	.9266	.6017	.2767	.9518	.6268	.3019	.9769	.6520	.3270	.0021
766	.9018	.5769	.2519	.9270	.6020	.2771	.9522	.6272	.3023	.9774	.6524	.3275	.0026
769	.9021	.5772	.2523	.9274	.6024	.2775	.9526	.6277	.3027	.9778	.6529	.3280	.0030
772	.9025	.5776	.2526	.9277	.6028	.2779	.9530	.6281	.3032	.9783	.6533	.3284	.0035
418775	46.9028	48.5779	50.2530	51.9281	53.6032	55.2783	56.9534	58.6285	60.3036	61.9787	63.6538	65.3289	67.0040
778	.9031	.5782	.2534	.9285	.6036	.2787	.9538	.6289	.3040	.9791	.6543	.3294	.0045
781	.9035	.5786	.2537	.9288	.6040	.2791	.9542	.6293	.3045	.9796	.6547	.3298	.0050
784	.9038	.5789	.2541	.9292	.6044	.2795	.9546	.6298	.3049	.9800	.6552	.3303	.0054
787	.9041	.5793	.2544	.9296	.6047	.2799	.9550	.6302	.3053	.9805	.6556	.3308	.0059
418790	46.9045	48.5796	50.2548	51.9300	53.6051	55.2803	56.9554	58.6306	60.3058	61.9809	63.6561	65.3312	67.0064
793	.9048	.5800	.2552	.9303	.6055	.2807	.9558	.6310	.3062	.9814	.6565	.3317	.0069
796	.9052	.5803	.2555	.9307	.6059	.2811	.9563	.6314	.3066	.9818	.6570	.3322	.0074
799	.9055	.5807	.2559	.9311	.6063	.2815	.9567	.6319	.3071	.9823	.6574	.3326	.0078
802	.9058	.5810	.2562	.9314	.6067	.2819	.9571	.6323	.3075	.9827	.6579	.3331	.0083
418805	46.9062	48.5814	50.2566	51.9318	53.6070	55.2823	56.9575	58.6327	60.3079	61.9831	63.6584	65.3336	67.0088
808	.9065	.5817	.2570	.9322	.6074	.2827	.9579	.6331	.3084	.9836	.6588	.3340	.0093
811	.9068	.5821	.2573	.9326	.6078	.2831	.9583	.6335	.3088	.9840	.6593	.3345	.0098
814	.9072	.5824	.2577	.9329	.6082	.2834	.9587	.6340	.3092	.9845	.6597	.3350	.0102
817	.9075	.5828	.2580	.9333	.6086	.2838	.9591	.6344	.3096	.9849	.6602	.3355	.0107
418820	46.9078	48.5831	50.2584	51.9337	53.6090	55.2842	56.9595	58.6348	60.3101	61.9854	63.6606	65.3359	67.0112
823	.9082	.5835	.2588	.9341	.6093	.2846	.9599	.6352	.3105	.9858	.6611	.3364	.0117
826	.9085	.5838	.2591	.9344	.6097	.2850	.9603	.6356	.3109	.9862	.6616	.3369	.0122
829	.9088	.5842	.2595	.9348	.6101	.2854	.9607	.6361	.3114	.9867	.6620	.3373	.0126
832	.9092	.5845	.2598	.9352	.6105	.2858	.9612	.6365	.3118	.9871	.6625	.3378	.0131
418835	46.9095	48.5849	50.2602	51.9355	53.6109	55.2862	56.9616	58.6369	60.3122	61.9876	63.6629	65.3383	67.0136
838	.9099	.5852	.2606	.9359	.6113	.2866	.9620	.6373	.3127	.9880	.6634	.3387	.0141
841	.9102	.5856	.2609	.9363	.6116	.2870	.9624	.6377	.3131	.9885	.6638	.3392	.0146
844	.9105	.5859	.2613	.9367	.6120	.2874	.9628	.6382	.3135	.9889	.6643	.3397	.0150
847	.9109	.5863	.2616	.9370	.6124	.2878	.9632	.6386	.3140	.9894	.6647	.3401	.0155
418850	46.9112	48.5866	50.2620	51.9374	53.6128	55.2882	56.9636	58.6390	60.3144	61.9898	63.6652	65.3406	67.0160
853	.9115	.5869	.2624	.9378	.6132	.2886	.9640	.6394	.3148	.9902	.6657	.3411	.0165
856	.9119	.5873	.2627	.9381	.6136	.2890	.9644	.6398	.3153	.9907	.6661	.3415	.0170
859	.9122	.5876	.2631	.9385	.6140	.2894	.9648	.6403	.3157	.9911	.6666	.3420	.0174
862	.9125	.5880	.2634	.9389	.6143	.2898	.9652	.6407	.3161	.9916	.6670	.3425	.0179
418865	46.9129	48.5883	50.2638	51.9393	53.6147	55.2902	56.9656	58.6411	60.3166	61.9920	63.6675	65.3429	67.0184
868	.9132	.5887	.2642	.9396	.6151	.2906	.9660	.6415	.3170	.9925	.6679	.3434	.0189
871	.9136	.5890	.2645	.9400	.6155	.2910	.9665	.6419	.3174	.9929	.6684	.3439	.0194
874	.9139	.5894	.2649	.9404	.6159	.2914	.9669	.6424	.3179	.9934	.6688	.3443	.0198
877	.9142	.5897	.2652	.9407	.6163	.2918	.9673	.6428	.3183	.9938	.6693	.3448	.0203
418880	46.9146	48.5901	50.2656	51.9411	53.6166	55.2922	56.9677	58.6432	60.3187	61.9942	63.6698	65.3453	67.0208
883	.9149	.5904	.2660	.9415	.6170	.2926	.9681	.6436	.3192	.9947	.6702	.3457	.0213
886	.9152	.5908	.2663	.9419	.6174	.2930	.9685	.6440	.3196	.9951	.6707	.3462	.0218
889	.9156	.5911	.2667	.9422	.6178	.2933	.9689	.6445	.3200	.9956	.6711	.3467	.0222
892	.9159	.5915	.2670	.9426	.6182	.2937	.9693	.6449	.3204	.9960	.6716	.3472	.0227
418895	46.9162	48.5918	50.2674	51.9430	53.6186	55.2941	56.9697	58.6453	60.3209	61.9965	63.6720	65.3476	67.0232
898	.9166	.5922	.2678	.9434	.6189	.2945	.9701	.6457	.3213	.9969	.6725	.3481	.0237
901	.9169	.5925	.2681	.9437	.6193	.2949	.9705	.6461	.3217	.9973	.6730	.3486	.0242
904	.9172	.5929	.2685	.9441	.6197	.2953	.9709	.6466	.3222	.9978	.6734	.3490	.0246
907	.9176	.5932	.2688	.9445	.6201	.2957	.9714	.6470	.3226	.9982	.6739	.3495	.0251
418910	46.9179	48.5936	50.2692	51.9448	53.6205	55.2961	56.9718	58.6474	60.3230	61.9987	63.6743	65.3500	67.0256
913	.9183	.5939	.2696	.9452	.6209	.2965	.9722	.6478	.3235	.9991	.6748	.3504	.0261
916	.9186	.5943	.2699	.9456	.6212	.2969	.9726	.6482	.3239	.9996	.6752	.3509	.0266
919	.9189	.5946	.2703	.9460	.6216	.2973	.9730	.6487	.3243	62.0000	.6757	.3514	.0270
922	.9193	.5950	.2706	.9463	.6220	.2977	.9734	.6491	.3248	.0005	.6761	.3518	.0275
418925	46.9196	48.5953	50.2710	51.9467	53.6224	55.2981	56.9738	58.6495	60.3252	62.0009	63.6766	65.3523	67.0280
928	.9199	.5956	.2714	.9471	.6228	.2985	.9742	.6499	.3256	.0013	.6771	.3528	.0285
931	.9203	.5960	.2717	.9474	.6232	.2989	.9746	.6503	.3261	.0018	.6775	.3532	.0290
934	.9206	.5963	.2721	.9478	.6236	.2993	.9750	.6508	.3265	.0022	.6780	.3537	.0294
937	.9209	.5967	.2724	.9482	.6239	.2997	.9754	.6512	.3269	.0027	.6784	.3542	.0299
418940	46.9213	48.5970	50.2728	51.9486	53.6243	55.3001	56.9758	58.6516	60.3274	62.0031	63.6789	65.3546	67.0304
943	.9216	.5974	.2732	.9489	.6247	.3005	.9762	.6520	.3278	.0066	.6793	.3551	.0309
946	.9220	.5977	.2735	.9493	.6251	.3009	.9767	.6524	.3282	.0040	.6798	.3556	.0314
949	.9223	.5981	.2739	.9497	.6255	.3013	.9771	.6529	.3287	.0045	.6802	.3560	.0318
952	.9226	.5984	.2742	.9500	.6259	.3017	.9775	.6533	.3291	.0049	.6807	.3565	.0323
418955	46.9230	48.5988	50.2746	51.9504	53.6262	55.3021	56.9779	58.6537	60.3295	62.0053	63.6812	65.3570	67.0328
958	.9233	.5991	.2750	.9508	.6266	.3025	.9783	.6541	.3300	.0058	.6816	.3574	.0333
961	.9236	.5995	.2753	.9512	.6270	.3029	.9787	.6545	.3304	.0062	.6821	.3579	.0338
964	.9240	.5998	.2757	.9515	.6274	.3032	.9791	.6550	.3308	.0067	.6825	.3584	.0342
967	.9243	.6002	.2760	.9519	.6278	.3036	.9795	.6554	.3312	.0071	.6830	.3589	.0347
418970	46.9246	48.6005	50.2764	51.9523	53.6282	55.3040	56.9799	58.6558	60.3317	62.0076	63.6834	65.3593	67.0352
973	.9250	.6009	.2768	.9527	.6285	.3044	.9803	.6562	.3321	.0080	.6839	.3598	.0357
976	.9253	.6012	.2771	.9530	.6289	.3048	.9807	.6566	.3325	.0084	.6844	.3603	.0362
979	.9256	.6016	.2775	.9534	.6293	.3052	.9811	.6571	.3330	.0089	.6848	.3607	.0366
982	.9260	.6019	.2778	.9538	.6297	.3056	.9816	.6575	.3334	.0093	.6853	.3612	.0371
418985	46.9263	48.6023	50.2782	51.9541	53.6301	55.3060	56.9820	58.6579	60.3338	62.0098	63.6857	65.3617	67.0376
988	.9267	.6026	.2786	.9545	.6305	.3064	.9824	.6583	.3343	.0102	.6862	.3621	.0381
991	.9270	.6030	.2789	.9549	.6308	.3068	.9828	.6587	.3347	.0107	.6866	.3626	.0386
994	.9273	.6033	.2793	.9553	.6312	.3072	.9832	.6592	.3351	.0111	.6871	.3631	.0390
997	.9277	.6037	.2796	.9556	.6316	.3076	.9836	.6596	.3356	.0116	.6875	.3635	.0395
419000	46.9280	48.6040	50.2800	51.9560	53.6320	55.3080	56.9840	58.6600	60.3360	62.0120	63.6880	65.3640	67.0400

MEGACYCLES PER SECOND

H A R M O N I C S

BASIC FREQ.	164	168	172	176	180	184	188	192	200	208	216	224	232
418700	68.6668	70.3416	72.0164	73.6912	75.3660	77.0408	78.7156	80.3904	83.7400	87.0896	90.4392	93.7888	97.1384
703	.6673	.3421	.0169	.6917	.3665	.0414	.7162	.3910	.7406	.0902	.4398	.7895	.1391
706	.6678	.3426	.0174	.6923	.3671	.0419	.7167	.3916	.7412	.0908	.4405	.7901	.1398
709	.6683	.3431	.0179	.6928	.3676	.0425	.7173	.3921	.7418	.0915	.4411	.7908	.1405
712	.6688	.3436	.0185	.6933	.3682	.0430	.7179	.3927	.7424	.0921	.4418	.7915	.1412
418715	68.6693	70.3441	72.0190	73.6938	75.3687	77.0436	78.7184	80.3933	83.7430	87.0927	90.4424	93.7922	97.1419
718	.6698	.3446	.0195	.6944	.3692	.0441	.7190	.3939	.7436	.0933	.4431	.7928	.1426
721	.6702	.3451	.0200	.6949	.3698	.0447	.7195	.3944	.7442	.0940	.4437	.7935	.1433
724	.6707	.3456	.0205	.6954	.3703	.0452	.7201	.3950	.7448	.0946	.4444	.7942	.1440
727	.6712	.3461	.0210	.6960	.3709	.0458	.7207	.3956	.7454	.0952	.4450	.7948	.1447
418730	68.6717	70.3466	72.0216	73.6965	75.3714	77.0463	78.7212	80.3962	83.7460	87.0958	90.4457	93.7955	97.1454
733	.6722	.3471	.0221	.6970	.3719	.0469	.7218	.3967	.7466	.0965	.4463	.7962	.1461
736	.6727	.3476	.0226	.6975	.3725	.0474	.7224	.3973	.7472	.0971	.4470	.7969	.1468
739	.6732	.3482	.0231	.6981	.3730	.0480	.7229	.3979	.7478	.0977	.4476	.7975	.1474
742	.6737	.3487	.0236	.6986	.3736	.0485	.7235	.3985	.7484	.0983	.4483	.7982	.1481
418745	68.6742	70.3492	72.0241	73.6991	75.3741	77.0491	78.7241	80.3990	83.7490	87.0990	90.4489	93.7989	97.1488
748	.6747	.3497	.0247	.6996	.3746	.0496	.7246	.3996	.7496	.0996	.4496	.7996	.1495
751	.6752	.3502	.0252	.7002	.3752	.0502	.7252	.4002	.7502	.1002	.4502	.8002	.1502
754	.6757	.3507	.0257	.7007	.3757	.0507	.7258	.4008	.7508	.1008	.4509	.8009	.1509
757	.6761	.3512	.0262	.7012	.3763	.0513	.7263	.4013	.7514	.1015	.4515	.8016	.1516
418760	68.6766	70.3517	72.0267	73.7018	75.3768	77.0518	78.7269	80.4019	83.7520	87.1021	90.4522	93.8022	97.1523
763	.6771	.3522	.0272	.7023	.3773	.0524	.7274	.4025	.7526	.1027	.4528	.8029	.1530
766	.6776	.3527	.0278	.7028	.3779	.0529	.7280	.4031	.7532	.1033	.4535	.8036	.1537
769	.6781	.3532	.0283	.7033	.3784	.0535	.7286	.4036	.7538	.1040	.4541	.8043	.1544
772	.6786	.3537	.0288	.7039	.3790	.0540	.7291	.4042	.7544	.1046	.4548	.8049	.1551
418775	68.6791	70.3542	72.0293	73.7044	75.3795	77.0546	78.7297	80.4048	83.7550	87.1052	90.4554	93.8056	97.1558
778	.6796	.3547	.0298	.7049	.3800	.0552	.7303	.4054	.7556	.1058	.4560	.8063	.1565
781	.6801	.3552	.0303	.7055	.3806	.0557	.7308	.4060	.7562	.1064	.4567	.8069	.1572
784	.6806	.3557	.0308	.7060	.3811	.0563	.7314	.4065	.7568	.1071	.4573	.8076	.1579
787	.6811	.3562	.0314	.7065	.3817	.0568	.7320	.4071	.7574	.1077	.4580	.8083	.1586
418790	68.6816	70.3567	72.0319	73.7070	75.3822	77.0574	78.7325	80.4077	83.7580	87.1083	90.4586	93.8090	97.1593
793	.6821	.3572	.0324	.7076	.3827	.0579	.7331	.4083	.7586	.1089	.4593	.8096	.1600
796	.6825	.3577	.0329	.7081	.3833	.0585	.7336	.4088	.7592	.1096	.4599	.8103	.1607
799	.6830	.3582	.0334	.7086	.3838	.0590	.7342	.4094	.7598	.1102	.4606	.8110	.1614
802	.6835	.3587	.0339	.7092	.3844	.0596	.7348	.4100	.7604	.1108	.4612	.8116	.1621
418805	68.6840	70.3592	72.0345	73.7097	75.3849	77.0601	78.7353	80.4106	83.7610	87.1114	90.4619	93.8123	97.1628
808	.6845	.3597	.0350	.7102	.3854	.0607	.7359	.4111	.7616	.1121	.4625	.8130	.1635
811	.6850	.3602	.0355	.7107	.3860	.0612	.7365	.4117	.7622	.1127	.4632	.8137	.1642
814	.6855	.3608	.0360	.7113	.3865	.0618	.7370	.4123	.7628	.1133	.4638	.8143	.1648
817	.6860	.3613	.0365	.7118	.3871	.0623	.7376	.4129	.7634	.1139	.4645	.8150	.1655
418820	68.6865	70.3618	72.0370	73.7123	75.3876	77.0629	78.7382	80.4134	83.7640	87.1146	90.4651	93.8157	97.1662
823	.6870	.3623	.0376	.7128	.3881	.0634	.7387	.4140	.7646	.1152	.4658	.8164	.1669
826	.6875	.3628	.0381	.7134	.3887	.0640	.7393	.4146	.7652	.1158	.4664	.8170	.1676
829	.6880	.3633	.0386	.7139	.3892	.0645	.7399	.4152	.7658	.1164	.4671	.8177	.1683
832	.6884	.3638	.0391	.7144	.3898	.0651	.7404	.4157	.7664	.1171	.4677	.8184	.1690
418835	68.6889	70.3643	72.0396	73.7150	75.3903	77.0656	78.7410	80.4163	83.7670	87.1177	90.4684	93.8190	97.1697
838	.6894	.3648	.0401	.7155	.3908	.0662	.7415	.4169	.7676	.1183	.4690	.8197	.1704
841	.6899	.3653	.0407	.7160	.3914	.0667	.7421	.4175	.7682	.1189	.4697	.8204	.1711
844	.6904	.3658	.0412	.7165	.3919	.0673	.7427	.4180	.7688	.1196	.4703	.8211	.1718
847	.6909	.3663	.0417	.7171	.3925	.0678	.7432	.4186	.7694	.1202	.4710	.8217	.1725
418850	68.6914	70.3668	72.0422	73.7176	75.3930	77.0684	78.7438	80.4192	83.7700	87.1208	90.4716	93.8224	97.1732
853	.6919	.3673	.0427	.7181	.3935	.0690	.7444	.4198	.7706	.1214	.4722	.8231	.1739
856	.6924	.3678	.0432	.7187	.3941	.0695	.7449	.4204	.7712	.1220	.4729	.8237	.1746
859	.6929	.3683	.0437	.7192	.3946	.0701	.7455	.4209	.7718	.1227	.4735	.8244	.1753
862	.6934	.3688	.0443	.7197	.3952	.0706	.7461	.4215	.7724	.1233	.4742	.8251	.1760
418865	68.6939	70.3693	72.0448	73.7202	75.3957	77.0712	78.7466	80.4221	83.7730	87.1239	90.4748	93.8258	97.1767
868	.6944	.3698	.0453	.7208	.3962	.0717	.7472	.4227	.7736	.1245	.4755	.8264	.1774
871	.6948	.3703	.0458	.7213	.3968	.0723	.7477	.4232	.7742	.1252	.4761	.8271	.1781
874	.6953	.3708	.0463	.7218	.3973	.0728	.7483	.4238	.7748	.1258	.4768	.8278	.1788
877	.6958	.3713	.0468	.7224	.3979	.0734	.7489	.4244	.7754	.1264	.4774	.8284	.1795
418880	68.6963	70.3718	72.0474	73.7229	75.3984	77.0739	78.7494	80.4250	83.7760	87.1270	90.4781	93.8291	97.1802
883	.6968	.3723	.0479	.7234	.3989	.0745	.7500	.4255	.7766	.1277	.4787	.8298	.1809
886	.6973	.3728	.0484	.7239	.3995	.0750	.7506	.4261	.7772	.1283	.4794	.8305	.1816
889	.6978	.3734	.0489	.7245	.4000	.0756	.7511	.4267	.7778	.1289	.4800	.8311	.1822
892	.6983	.3739	.0494	.7250	.4006	.0761	.7517	.4273	.7784	.1295	.4807	.8318	.1829
418895	68.6988	70.3744	72.0499	73.7255	75.4011	77.0767	78.7523	80.4278	83.7790	87.1302	90.4813	93.8325	97.1836
898	.6993	.3749	.0505	.7260	.4016	.0772	.7528	.4284	.7796	.1308	.4820	.8332	.1843
901	.6998	.3754	.0510	.7266	.4022	.0778	.7534	.4290	.7802	.1314	.4826	.8338	.1850
904	.7003	.3759	.0515	.7271	.4027	.0783	.7540	.4296	.7808	.1320	.4833	.8345	.1857
907	.7007	.3764	.0520	.7276	.4033	.0789	.7545	.4301	.7814	.1327	.4839	.8352	.1864
418910	68.7012	70.3769	72.0525	73.7282	75.4038	77.0794	78.7551	80.4307	83.7820	87.1333	90.4846	93.8358	97.1871
913	.7017	.3774	.0530	.7287	.4043	.0800	.7556	.4313	.7826	.1339	.4852	.8365	.1878
916	.7022	.3779	.0536	.7292	.4049	.0805	.7562	.4319	.7832	.1345	.4859	.8372	.1885
919	.7027	.3784	.0541	.7297	.4054	.0811	.7568	.4324	.7838	.1352	.4865	.8379	.1892
922	.7032	.3789	.0546	.7303	.4060	.0816	.7573	.4330	.7844	.1358	.4872	.8385	.1899
418925	68.7037	70.3794	72.0551	73.7308	75.4065	77.0822	78.7579	80.4336	83.7850	87.1364	90.4878	93.8392	97.1906
928	.7042	.3799	.0556	.7313	.4070	.0828	.7585	.4342	.7856	.1370	.4884	.8399	.1913
931	.7047	.3804	.0561	.7319	.4076	.0833	.7590	.4348	.7862	.1376	.4891	.8405	.1920
934	.7052	.3809	.0566	.7324	.4081	.0839	.7596	.4353	.7868	.1383	.4897	.8412	.1927
937	.7057	.3814	.0572	.7329	.4087	.0844	.7602	.4359	.7874	.1389	.4904	.8419	.1934
418940	68.7062	70.3819	72.0577	73.7334	75.4092	77.0850	78.7607	80.4365	83.7880	87.1395	90.4910	93.8426	97.1941
943	.7067	.3824	.0582	.7340	.4097	.0855	.7613	.4371	.7886	.1401	.4917	.8432	.1948
946	.7071	.3829	.0587	.7345	.4103	.0861	.7618	.4376	.7892	.1408	.4923	.8439	.1955
949	.7076	.3834	.0592	.7350	.4108	.0866	.7624	.4382	.7898	.1414	.4930	.8446	.1962
952	.7081	.3839	.0597	.7356	.4114	.0872	.7630	.4388	.7904	.1420	.4936	.8452	.1969
418955	68.7086	70.3844	72.0603	73.7361	75.4119	77.0877	78.7635	80.4394	83.7910	87.1426	90.4943	93.8459	97.1976
958	.7091	.3849	.0608	.7366	.4124	.0883	.7641	.4399	.7916	.1433	.4949	.8466	.1983
961	.7096	.3854	.0613	.7371	.4130	.0888	.7647	.4405	.7922	.1439	.4956	.8473	.1990
964	.7101	.3860	.0618	.7377	.4135	.0894	.7652	.4411	.7928	.1445	.4962	.8479	.1996
967	.7106	.3865	.0623	.7382	.4141	.0899	.7658	.4417	.7934	.1451	.4969	.8486	.2003
418970	68.7111	70.3870	72.0628	73.7387	75.4146	77.0905	78.7664	80.4422	83.7940	87.1458	90.4975	93.8493	97.2010
973	.7116	.3875	.0634	.7392	.4151	.0910	.7669	.4428	.7946	.1464	.4982	.8500	.2017
976	.7121	.3880	.0639	.7398	.4157	.0916	.7675	.4434	.7952	.1470	.4988	.8506	.2024
979	.7126	.3885	.0644	.7403	.4162	.0921	.7681	.4440	.7958	.1476	.4995	.8513	.2031
982	.7130	.3890	.0649	.7408	.4168	.0927	.7686	.4445	.7964	.1483	.5001	.8520	.2038
418985	68.7135	70.3895	72.0654	73.7414	75.4173	77.0932	78.7692	80.4451	83.7970	87.1489	90.5008	93.8526	97.2045
988	.7140	.3900	.0659	.7419	.4178	.0938	.7697	.4457	.7976	.1495	.5014	.8533	.2052
991	.7145	.3905	.0665	.7424	.4184	.0943	.7703	.4463	.7982	.1501	.5021	.8540	.2059
994	.7150	.3910	.0670	.7429	.4189	.0949	.7709	.4468	.7988	.1508	.5027	.8547	.2066
997	.7155	.3915	.0675	.7435	.4195	.0954	.7714	.4474	.7994	.1514	.5034	.8553	.2073
419000	68.7160	70.3920	72.0680	73.7440	75.4200	77.0960	78.7720	80.4480	83.8000	87.1520	90.5040	93.8560	97.2080

HARMONICS

BASIC FREQ.	112	116	120	124	128	132	136	140	144	148	152	156	160
419000	46.9280	48.6040	50.2800	51.9560	53.6320	55.3080	56.9840	58.6600	60.3360	62.0120	63.6880	65.3640	67.0400
003	.9283	.6043	.2804	.9564	.6324	.3084	.9844	.6604	.3364	.0124	.6885	.3645	.0405
006	.9287	.6047	.2807	.9567	.6328	.3088	.9848	.6608	.3369	.0129	.6889	.3649	.0410
009	.9290	.6050	.2811	.9571	.6332	.3092	.9852	.6613	.3373	.0133	.6894	.3654	.0414
012	.9293	.6054	.2814	.9575	.6335	.3096	.9856	.6617	.3377	.0138	.6898	.3659	.0419
419015	46.9297	48.6057	50.2818	51.9579	53.6339	55.3100	56.9860	58.6621	60.3382	62.0142	63.6903	65.3663	67.0424
018	.9300	.6061	.2822	.9582	.6343	.3104	.9864	.6625	.3386	.0147	.6907	.3668	.0429
021	.9304	.6064	.2825	.9586	.6347	.3108	.9869	.6629	.3390	.0151	.6912	.3673	.0434
024	.9307	.6068	.2829	.9590	.6351	.3112	.9873	.6634	.3395	.0156	.6916	.3677	.0438
027	.9310	.6071	.2832	.9593	.6355	.3116	.9877	.6638	.3399	.0160	.6921	.3682	.0443
419030	46.9314	48.6075	50.2836	51.9597	53.6358	55.3120	56.9881	58.6642	60.3403	62.0164	63.6926	65.3687	67.0448
033	.9317	.6078	.2840	.9601	.6362	.3124	.9885	.6646	.3408	.0169	.6930	.3691	.0453
036	.9320	.6082	.2843	.9605	.6366	.3128	.9889	.6650	.3412	.0173	.6935	.3696	.0458
039	.9324	.6085	.2847	.9608	.6370	.3131	.9893	.6655	.3416	.0178	.6939	.3701	.0462
042	.9327	.6089	.2850	.9612	.6374	.3135	.9897	.6659	.3420	.0182	.6944	.3706	.0467
419045	46.9330	48.6092	50.2854	51.9616	53.6378	55.3139	56.9901	58.6663	60.3425	62.0187	63.6948	65.3710	67.0472
048	.9334	.6096	.2858	.9620	.6381	.3143	.9905	.6667	.3429	.0191	.6953	.3715	.0477
051	.9337	.6099	.2861	.9623	.6385	.3147	.9909	.6671	.3433	.0195	.6958	.3720	.0482
054	.9340	.6103	.2865	.9627	.6389	.3151	.9913	.6676	.3438	.0200	.6962	.3724	.0486
057	.9344	.6106	.2868	.9631	.6393	.3155	.9918	.6680	.3442	.0204	6967	.3729	.0491
419060	46.9347	48.6110	50.2872	51.9634	53.6397	55.3159	56.9922	58.6684	60.3446	62.0209	63.6971	65.3734	67.0496
063	.9351	.6113	.2876	.9638	.6401	.3163	.9926	.6688	.3451	.0213	.6976	.3738	.0501
066	.9354	.6117	.2879	.9642	.6404	.3167	.9930	.6692	.3455	.0218	.6980	.3743	.0506
069	.9357	.6120	.2883	.9646	.6408	.3171	.9934	.6697	.3459	.0222	.6985	.3748	.0510
072	.9361	.6124	.2886	.9649	.6412	.3175	.9938	.6701	.3464	.0227	.6989	.3752	.0515
419075	46.9364	48.6127	50.2890	51.9653	53.6416	55.3179	56.9942	58.6705	60.3468	62.0231	63.6994	65.3757	67.0520
078	.9367	.6130	.2894	.9657	.6420	.3183	.9946	.6709	.3472	.0235	.6999	.3762	.0525
081	.9371	.6134	.2897	.9660	.6424	.3187	.9950	.6713	.3477	.0240	.7003	.3766	.0530
084	.9374	.6137	.2901	.9664	.6428	.3191	.9954	.6718	.3481	.0244	.7008	.3771	.0534
087	.9377	.6141	.2904	.9668	.6431	.3195	.9958	.6722	.3485	.0249	.7012	.3776	.0539
419090	46.9381	48.6144	50.2908	51.9672	53.6435	55.3199	56.9962	58.6726	60.3490	62.0253	63.7017	65.3780	67.0544
093	.9384	.6148	.2912	.9675	.6439	.3203	.9966	.6730	.3494	.0258	.7021	.3785	.0549
096	.9388	.6151	.2915	.9679	.6443	.3207	.9971	.6734	.3498	.0262	.7026	.3790	.0554
099	.9391	.6155	.2919	.9683	.6447	.3211	.9975	.6739	.3503	.0267	.7030	.3794	.0558
102	.9394	.6158	.2922	.9686	.6451	.3215	.9979	.6743	.3507	.0271	.7035	.3799	.0563
419105	46.9398	48.6162	50.2926	51.9690	53.6454	55.3219	56.9983	58.6747	60.3511	62.0275	63.7040	65.3804	67.0568
108	.9401	.6165	.2930	.9694	.6458	.3223	.9987	.6751	.3516	.0280	.7044	.3808	.0573
111	.9404	.6169	.2933	.9698	.6462	.3227	.9991	.6755	.3520	.0284	.7049	.3813	.0578
114	.9408	.6172	.2937	.9701	.6466	.3230	.9995	.6760	.3524	.0289	.7053	.3818	.0582
117	.9411	.6176	.2940	.9705	.6470	.3234	.9999	.6764	.3528	.0293	.7058	.3823	.0587
419120	46.9414	48.6179	50.2944	51.9709	53.6474	55.3238	57.0003	58.6768	60.3533	62.0298	63.7062	65.3827	67.0592
123	.9418	.6183	.2948	.9713	.6477	.3242	.0007	.6772	.3537	.0302	.7067	.3832	.0597
126	.9421	.6186	.2951	.9716	.6481	.3246	.0011	.6776	.3541	.0306	.7072	.3837	.0602
129	.9424	.6190	.2955	.9720	.6485	.3250	.0015	.6781	.3546	.0311	.7076	.3841	.0606
132	.9428	.6193	.2958	.9724	.6489	.3254	.0020	.6785	.3550	.0315	.7081	.3846	.0611
419135	46.9431	48.6197	50.2962	51.9727	53.6493	55.3258	57.0024	58.6789	60.3554	62.0320	63.7085	65.3851	67.0616
138	.9435	.6200	.2966	.9731	.6497	.3262	.0028	.6793	.3559	.0324	.7090	.3855	.0621
141	.9438	.6204	.2969	.9735	.6500	.3266	.0032	.6797	.3563	.0329	.7094	.3860	.0626
144	.9441	.6207	.2973	.9739	.6504	.3270	.0036	.6802	.3567	.0333	.7099	.3865	0630
147	.9445	.6211	.2976	.9742	.6508	.3274	.0040	.6806	.3572	.0338	.7103	.3869	.0635
419150	46.9448	48.6214	50.2980	51.9746	53.6512	55.3278	57.0044	58.6810	60.3576	62.0342	63.7108	65.3874	67.0640
153	.9451	.6217	.2984	.9750	.6516	.3282	.0048	.6814	.3580	.0346	.7113	.3879	.0645
156	.9455	.6221	.2987	.9753	.6520	.3286	.0052	.6818	.3585	.0351	.7117	.3883	.0650
159	.9458	.6224	.2991	.9757	.6524	.3290	.0056	.6823	.3589	.0355	.7122	.3888	.0654
162	.9461	.6228	.2994	.9761	.6527	.3294	.0060	.6827	.3593	.0360	.7126	.3893	.0659
419165	46.9465	48.6231	50.2998	51.9765	53.6531	55.3298	57.0064	58.6831	60.3598	62.0364	63.7131	65.3897	67.0664
168	.9468	.6235	.3002	.9768	.6535	.3302	.0068	.6835	.3602	.0369	.7135	.3902	.0669
171	.9472	.6238	.3005	.9772	.6539	.3306	.0073	.6839	.3606	.0373	.7140	.3907	.0674
174	.9475	.6242	.3009	.9776	.6543	.3310	.0077	.6844	.3611	.0378	.7144	.3911	.0678
177	.9478	.6245	.3012	.9779	.6547	.3314	.0081	.6848	.3615	.0382	.7149	.3916	.0683
419180	46.9482	48.6249	50.3016	51.9783	53.6550	55.3318	57.0085	58.6852	60.3619	62.0386	63.7154	65.3921	67.0688
183	.9485	.6252	.3020	.9787	.6554	.3322	.0089	.6856	.3624	.0391	.7158	.3925	.0693
186	.9488	.6256	.3023	.9791	.6558	.3326	0093	6860	.3628	.0395	.7163	.3930	.0698
189	.9492	.6259	.3027	.9794	.6562	.3329	.0097	.6865	.3632	.0400	.7167	.3935	.0702
192	.9495	.6263	.3030	.9798	.6566	.3333	.0101	.6869	.3636	.0404	.7172	.3940	.0707
419195	46.9498	48.6266	50.3034	51.9802	53.6570	55.3337	57.0105	58.6873	60.3641	62.0409	63.7176	65.3944	67.0712
198	.9502	.6270	.3038	.9806	.6573	.3341	.0109	.6877	.3645	.0413	.7181	.3949	.0717
201	.9505	.6273	.3041	.9809	.6577	.3345	.0113	.6881	.3649	.0417	.7186	.3954	.0722
204	.9508	.6277	.3045	.9813	.6581	.3349	.0117	.6886	.3654	.0422	.7190	.3958	.0726
207	.9512	.6280	.3048	.9817	.6585	.3353	.0122	.6890	.3658	.0426	.7195	.3963	.0731
419210	46.9515	48.6284	50.3052	51.9820	53.6589	55.3357	57.0126	58.6894	60.3662	62.0431	63.7199	65.3968	67.0736
213	.9519	.6287	.3056	.9824	.6593	.3361	.0130	.6898	.3667	.0435	.7204	.3972	.0741
216	.9522	.6291	.3059	.9828	.6596	.3365	.0134	.6902	.3671	.0440	.7208	.3977	.0746
219	.9525	.6294	.3063	.9832	.6600	.3369	.0138	.6907	.3675	.0444	.7213	.3982	.0750
222	.9529	.6298	.3066	.9835	.6604	.3373	.0142	.6911	.3680	.0449	.7217	.3986	.0755
419225	46.9532	48.6301	50.3070	51.9839	53.6608	55.3377	57.0146	58.6915	60.3684	62.0453	63.7222	65.3991	67.0760
228	.9535	.6304	.3074	.9843	.6612	.3381	.0150	.6919	.3688	.0457	.7227	.3996	.0765
231	.9539	.6308	.3077	.9846	.6616	.3385	.0154	.6923	.3693	.0462	.7231	.4000	.0770
234	.9542	.6311	.3081	.9850	.6620	.3389	.0158	.6928	.3697	.0466	.7236	.4005	.0774
237	.9545	.6315	.3084	.9854	.6623	.3393	.0162	.6932	.3701	.0471	.7240	.4010	.0779
419240	46.9549	48.6318	50.3088	51.9858	53.6627	55.3397	57.0166	58.6936	60.3706	62.0475	63.7245	65.4014	67.0784
243	.9552	.6322	.3092	.9861	.6631	.3401	.0170	.6940	.3710	.0480	.7249	.4019	.0789
246	.9556	.6325	.3095	.9865	.6635	.3405	.0175	.6944	.3714	.0484	.7254	.4024	.0794
249	.9559	.6329	.3099	.9869	.6639	.3409	.0179	.6949	.3719	.0489	.7258	.4028	.0798
252	.9562	.6332	.3102	.9872	.6643	.3413	.0183	.6953	.3723	.0493	.7263	.4033	.0803
419255	46.9566	48.6336	50.3106	51.9876	53.6646	55.3417	57.0187	58.6957	60.3727	62.0497	63.7268	65.4038	67.0808
258	.9569	.6339	.3110	.9880	.6650	.3421	.0191	.6961	.3732	.0502	.7272	.4042	.0813
261	.9572	.6343	.3113	.9884	.6654	.3425	.0195	.6965	.3736	.0506	.7277	.4047	.0818
264	.9576	.6346	.3117	.9887	.6658	.3428	.0199	.6970	.3740	.0511	.7281	.4052	.0822
267	.9579	.6350	.3120	.9891	.6662	.3432	.0203	.6974	.3744	.0515	.7286	.4057	.0827
419270	46.9582	48.6353	50.3124	51.9895	53.6666	55.3436	57.0207	58.6978	60.3749	62.0520	63.7290	65.4061	67.0832
273	.9586	.6357	.3128	.9899	.6669	.3440	.0211	.6982	.3753	.0524	.7295	.4066	.0837
276	.9589	.6360	.3131	.9902	.6673	.3444	.0215	.6986	.3757	.0528	.7300	.4071	.0842
279	.9592	.6364	.3135	.9906	.6677	.3448	.0219	.6991	.3762	.0533	.7304	.4075	.0846
282	.9596	.6367	.3138	.9910	.6681	.3452	.0224	.6995	.3766	.0537	.7309	.4080	.0851
419285	46.9599	48.6371	50.3142	51.9913	53.6685	55.3456	57.0228	58.6999	60.3770	62.0542	63.7313	65.4085	67.0856
288	.9603	.6374	.3146	.9917	.6689	.3460	.0232	.7003	.3775	.0546	.7318	.4089	.0861
291	.9606	.6378	.3149	.9921	.6692	.3464	.0236	.7007	.3779	.0551	.7322	.4094	.0866
294	.9609	.6381	.3153	.9925	.6696	.3468	.0240	.7012	.3783	.0555	.7327	.4099	.0870
297	.9613	.6385	.3156	.9928	.6700	.3472	.0244	.7016	.3788	.0560	.7331	.4103	.0875
419300	46.9616	48.6388	50.3160	51.9932	53.6704	55.3476	57.0248	58.7020	60.3792	62.0564	63.7336	65.4108	67.0880

MEGACYCLES PER SECOND

H A R M O N I C S

BASIC FREQ.	164	168	172	176	180	184	188	192	200	208	216	224	232
419000	68.7160	70.3920	72.0680	73.7440	75.4200	77.0960	78.7720	80.4480	83.8000	87.1520	90.5040	93.8560	97.2080
003	.7165	.3925	.0685	.7445	.4205	.0966	.7726	.4486	.8006	.1526	.5046	.8567	.2087
006	.7170	.3930	.0690	.7451	.4211	.0971	.7731	.4492	.8012	.1532	.5053	.8573	.2094
009	.7175	.3935	.0695	.7456	.4216	.0977	.7737	.4497	.8018	.1539	.5059	.8580	.2101
012	.7180	.3940	.0701	.7461	.4222	.0982	.7743	.4503	.8024	.1545	.5066	.8587	.2108
419015	68.7185	70.3945	72.0706	73.7466	75.4227	77.0988	78.7748	80.4509	83.8030	87.1551	90.5072	93.8594	97.2115
018	.7190	.3950	.0711	.7472	.4232	.0993	.7754	.4515	.8036	.1557	.5079	.8600	.2122
021	.7194	.3955	.0716	.7477	.4238	.0999	.7759	.4520	.8042	.1564	.5085	.8607	.2129
024	.7199	.3960	.0721	.7482	.4243	.1004	.7765	.4526	.8048	.1570	.5092	.8614	.2136
027	.7204	.3965	.0726	.7488	.4249	.1010	.7771	.4532	.8054	.1576	.5098	.8620	.2143
419030	68.7209	70.3970	72.0732	73.7493	75.4254	77.1015	78.7776	80.4538	83.8060	87.1582	90.5105	93.8627	97.2150
033	.7214	.3975	.0737	.7498	.4259	.1021	.7782	.4543	.8066	.1589	.5111	.8634	.2157
036	.7219	.3980	.0742	.7503	.4265	.1026	.7788	.4549	.8072	.1595	.5118	.8641	.2164
039	.7224	.3986	.0747	.7509	.4270	.1032	.7793	.4555	.8078	.1601	.5124	.8647	.2170
042	.7229	.3991	.0752	.7514	.4276	.1037	.7799	.4561	.8084	.1607	.5131	.8654	.2177
419045	68.7234	70.3996	72.0757	73.7519	75.4281	77.1043	78.7805	80.4566	83.8090	87.1614	90.5137	93.8661	97.2184
048	.7239	.4001	.0763	.7524	.4286	.1048	.7810	.4572	.8096	.1620	.5144	.8668	.2191
051	.7244	.4006	.0768	.7530	.4292	.1054	.7816	.4578	.8102	.1626	.5150	.8674	.2198
054	.7249	.4011	.0773	.7535	.4297	.1059	.7822	.4584	.8108	.1632	.5157	.8681	.2205
057	.7253	.4016	.0778	.7540	.4303	.1065	.7827	.4589	.8114	.1639	.5163	.8688	.2212
419060	68.7258	70.4021	72.0783	73.7546	75.4308	77.1070	78.7833	80.4595	83.8120	87.1645	90.5170	93.8694	97.2219
063	.7263	.4026	.0788	.7551	.4313	.1076	.7838	.4601	.8126	.1651	.5176	.8701	.2226
066	.7268	.4031	.0794	.7556	.4319	.1081	.7844	.4607	.8132	.1657	.5183	.8708	.2233
069	.7273	.4036	.0799	.7561	.4324	.1087	.7850	.4612	.8138	.1664	.5189	.8715	.2240
072	.7278	.4041	.0804	.7567	.4330	.1092	.7855	.4618	.8144	.1670	.5196	.8721	.2247
419075	68.7283	70.4046	72.0809	73.7572	75.4335	77.1098	78.7861	80.4624	83.8150	87.1676	90.5202	93.8728	97.2254
078	.7288	.4051	.0814	.7577	.4340	.1104	.7867	.4630	.8156	.1682	.5208	.8735	.2261
081	.7293	.4056	.0819	.7583	.4346	.1109	.7872	.4636	.8162	.1688	.5215	.8741	.2268
084	.7298	.4061	.0824	.7588	.4351	.1115	.7878	.4641	.8168	.1695	.5221	.8748	2275
087	.7303	.4066	.0830	.7593	.4357	.1120	.7884	.4647	.8174	.1701	.5228	.8755	.2282
419090	68.7308	70.4071	72.0835	73.7598	75.4362	77.1126	78.7889	80.4653	83.8180	87.1707	90.5234	93.8762	97.2289
093	.7313	.4076	.0840	.7604	.4367	.1131	.7895	.4659	.8186	.1713	.5241	.8768	.2296
096	.7317	.4081	.0845	.7609	.4373	.1137	.7900	.4664	.8192	.1720	.5247	.8775	.2303
099	.7322	.4086	.0850	.7614	.4378	.1142	.7906	.4670	.8198	.1726	.5254	.8782	.2310
102	.7327	.4091	.0855	.7620	.4384	.1148	.7912	.4676	.8204	.1732	.5260	.8788	.2317
419105	68.7332	70.4096	72.0861	73.7625	75.4389	77.1153	78.7917	80.4682	83.8210	87.1738	90.5267	93.8795	97.2324
108	.7337	.4101	.0866	.7630	.4394	.1159	.7923	.4687	.8216	.1745	.5273	.8802	.2331
111	.7342	.4106	.0871	.7635	.4400	.1164	.7929	.4693	.8222	.1751	.5280	.8809	.2338
114	.7347	.4112	.0876	.7641	.4405	.1170	.7934	.4699	.8228	.1757	.5286	.8815	.2344
117	.7352	.4117	.0881	.7646	.4411	.1175	.7940	.4705	.8234	.1763	.5293	.8822	.2351
419120	68.7357	70.4122	72.0886	73.7651	75.4416	77.1181	78.7946	80.4710	83.8240	87.1770	90.5299	93.8829	97.2358
123	.7362	.4127	.0892	.7656	.4421	.1186	.7951	.4716	.8246	.1776	.5306	.8836	.2365
126	.7367	.4132	.0897	.7662	.4427	.1192	.7957	.4722	.8252	.1782	.5312	.8842	.2372
129	.7372	.4137	.0902	.7667	.4432	.1197	.7963	.4728	.8258	.1788	.5319	.8849	.2379
132	.7376	.4142	.0907	.7672	.4438	.1203	.7968	.4733	.8264	.1795	.5325	.8856	.2386
419135	68.7381	70.4147	72.0912	73.7678	75.4443	77.1208	78.7974	80.4739	83.8270	87.1801	90.5332	93.8862	97.2393
138	.7386	.4152	.0917	.7683	.4448	.1214	.7979	.4745	.8276	.1807	.5338	.8869	.2400
141	.7391	.4157	.0923	.7688	.4454	.1219	.7985	.4751	.8282	.1813	.5345	.8876	.2407
144	.7396	.4162	.0928	.7693	.4459	.1225	.7991	.4756	.8288	.1820	.5351	.8883	.2414
147	.7401	.4167	.0933	.7699	.4465	.1230	.7996	.4762	.8294	.1826	.5358	.8889	.2421
419150	68.7406	70.4172	72.0938	73.7704	75.4470	77.1236	78.8002	80.4768	83.8300	87.1832	90.5364	93.8896	97.2428
153	.7411	.4177	.0943	.7709	.4475	.1242	.8008	.4774	.8306	.1838	.5370	.8903	.2435
156	.7416	.4182	.0948	.7715	.4481	.1247	.8013	.4780	.8312	.1844	.5377	.8909	.2442
159	.7421	.4187	.0953	.7720	.4486	.1253	.8019	.4785	.8318	.1851	.5383	.8916	.2449
162	.7426	.4192	.0959	.7725	.4492	.1258	.8025	.4791	.8324	.1857	.5390	.8923	.2456
419165	68.7431	70.4197	72.0964	73.7730	75.4497	77.1264	78.8030	80.4797	83.8330	87.1863	90.5396	93.8930	97.2463
168	.7436	.4202	.0969	.7736	.4502	.1269	.8036	.4803	.8336	.1869	.5403	.8936	.2470
171	.7440	.4207	.0974	.7741	.4508	.1275	.8041	.4808	.8342	.1876	.5409	.8943	.2477
174	.7445	.4212	.0979	.7746	.4513	.1280	.8047	.4814	.8348	.1882	.5416	.8950	.2484
177	.7450	.4217	.0984	.7752	.4519	.1286	.8053	.4820	.8354	.1888	.5422	.8956	.2491
419180	68.7455	70.4222	72.0990	73.7757	75.4524	77.1291	78.8058	80.4826	83.8360	87.1894	90.5429	93.8963	97.2498
183	.7460	.4227	.0995	.7762	.4529	.1297	.8064	.4831	.8366	.1901	.5435	.8970	.2505
186	.7465	.4232	.1000	.7767	.4535	.1302	.8070	.4837	.8372	.1907	.5442	.8977	.2512
189	.7470	.4238	.1005	.7773	.4540	.1308	.8075	.4843	.8378	.1913	.5448	.8983	.2518
192	.7475	.4243	.1010	.7778	.4546	.1313	.8081	.4849	.8384	.1919	.5455	.8990	.2525
419195	68.7480	70.4248	72.1015	73.7783	75.4551	77.1319	78.8087	80.4854	83.8390	87.1926	90.5461	93.8997	97.2532
198	.7485	.4253	.1021	.7788	.4556	.1324	.8092	.4860	.8396	.1932	.5468	.9004	.2539
201	.7490	.4258	.1026	.7794	.4562	.1330	.8098	.4866	.8402	.1938	.5474	.9010	.2546
204	.7495	.4263	.1031	.7799	.4567	.1335	.8104	.4872	.8408	.1944	.5481	.9017	.2553
207	.7499	.4268	.1036	.7804	.4573	.1341	.8109	.4877	.8414	.1951	.5487	.9024	.2560
419210	68.7504	70.4273	72.1041	73.7810	75.4578	77.1346	78.8115	80.4883	83.8420	87.1957	90.5494	93.9030	97.2567
213	.7509	.4278	.1046	.7815	.4583	.1352	.8120	.4889	.8426	.1963	.5500	.9037	.2574
216	.7514	.4283	.1052	.7820	.4589	.1357	.8126	.4895	.8432	.1969	.5507	.9044	.2581
219	.7519	.4288	.1057	.7825	.4594	.1363	.8132	.4900	.8438	.1976	.5513	.9051	.2588
222	.7524	.4293	.1062	.7831	.4600	.1368	.8137	.4906	.8444	.1982	.5520	.9057	.2595
419225	68.7529	70.4298	72.1067	73.7836	75.4605	77.1374	78.8143	80.4912	83.8450	87.1988	90.5526	93.9064	97.2602
228	.7534	.4303	.1072	.7841	.4610	.1380	.8149	.4918	.8456	.1994	.5532	.9071	.2609
231	.7539	.4308	.1077	.7847	.4616	.1385	.8154	.4924	.8462	.2000	.5539	.9077	.2616
234	.7544	.4313	.1082	.7852	.4621	.1391	.8160	.4929	.8468	.2007	.5545	.9084	.2623
237	.7549	.4318	.1088	.7857	.4627	.1396	.8166	.4935	.8474	.2013	.5552	.9091	.2630
419240	68.7554	70.4323	72.1093	73.7862	75.4632	77.1402	78.8171	80.4941	83.8480	87.2019	90.5558	93.9098	97.2637
243	.7559	.4328	.1098	.7868	.4637	.1407	.8177	.4947	.8486	.2025	.5565	.9104	.2644
246	.7563	.4333	.1103	.7873	.4643	.1413	.8182	.4952	.8492	.2032	.5571	.9111	.2651
249	.7568	.4338	.1108	.7878	.4648	.1418	.8188	.4958	.8498	.2038	.5578	.9118	.2658
252	.7573	.4343	.1113	.7884	.4654	.1424	.8194	.4964	.8504	.2044	.5584	.9124	.2665
419255	68.7578	70.4348	72.1119	73.7889	75.4659	77.1429	78.8199	80.4970	83.8510	87.2050	90.5591	93.9131	97.2672
258	.7583	.4353	.1124	.7894	.4664	.1435	.8205	.4975	.8516	.2057	.5597	.9138	.2679
261	.7588	.4358	.1129	.7899	.4670	.1440	.8211	.4981	.8522	.2063	.5604	.9145	.2686
264	.7593	.4364	.1134	.7905	.4675	.1446	.8216	.4987	.8528	.2069	.5610	.9151	.2692
267	.7598	.4369	.1139	.7910	.4681	.1451	.8222	.4993	.8534	.2075	.5617	.9158	.2699
419270	68.7603	70.4374	72.1144	73.7915	75.4686	77.1457	78.8228	80.4998	83.8540	87.2082	90.5623	93.9165	97.2706
273	.7608	.4379	.1150	.7920	.4691	.1462	.8233	.5004	.8546	.2088	.5630	.9172	.2713
276	.7613	.4384	.1155	.7926	.4697	.1468	.8239	.5010	.8552	.2094	.5636	.9178	.2720
279	.7618	.4389	.1160	.7931	.4702	.1473	.8245	.5016	.8558	.2100	.5643	.9185	.2727
282	.7622	.4394	.1165	.7936	.4708	.1479	.8250	.5021	.8564	.2107	.5649	.9192	.2734
419285	68.7627	70.4399	72.1170	73.7942	75.4713	77.1484	78.8256	80.5027	83.8570	87.2113	90.5656	93.9198	97.2741
288	.7632	.4404	.1175	.7947	.4718	.1490	.8261	.5033	.8576	.2119	.5662	.9205	.2748
291	.7637	.4409	.1181	.7952	.4724	.1495	.8267	.5039	.8582	.2125	.5669	.9212	.2755
294	.7642	.4414	.1186	.7957	.4729	.1501	.8273	.5044	.8588	.2132	.5675	.9219	.2762
297	.7647	.4419	.1191	.7963	.4735	.1506	.8278	.5050	.8594	.2138	.5682	.9225	.2769
419300	68.7652	70.4424	72.1196	73.7968	75.4740	77.1512	78.8284	80.5056	83.8600	87.2144	90.5688	93.9232	97.2776

H A R M O N I C S

BASIC FREQ.	112	116	120	124	128	132	136	140	144	148	152	156	160
419300	46.9616	48.6388	50.3160	51.9932	53.6704	55.3476	57.0248	58.7020	60.3792	62.0564	63.7336	65.4108	67.0880
303	.9619	.6391	.3164	.9936	.6708	.3480	.0252	.7024	.3796	.0568	.7341	.4113	.0885
306	.9623	.6395	.3167	.9939	.6712	.3484	.0256	.7028	.3801	.0573	.7345	.4117	.0890
309	.9626	.6398	.3171	.9943	.6716	.3488	.0260	.7033	.3805	.0577	.7350	.4122	.0894
312	.9629	.6402	.3174	.9947	.6719	.3492	.0264	.7037	.3809	.0582	.7354	.4127	.0899
419315	46.9633	48.6405	50.3178	51.9951	53.6723	55.3496	57.0268	58.7041	60.3814	62.0586	63.7359	65.4131	67.0904
318	.9636	.6409	.3182	.9954	.6727	.3500	.0272	.7045	.3818	.0591	.7363	.4136	.0909
321	.9640	.6412	.3185	.9958	.6731	.3504	.0277	.7049	.3822	.0595	.7368	.4141	.0914
324	.9643	.6416	.3189	.9962	.6735	.3508	.0281	.7054	.3827	.0600	.7372	.4145	.0918
327	.9646	.6419	.3192	.9965	.6739	.3512	.0285	.7058	.3831	.0604	.7377	.4150	.0923
419330	46.9650	48.6423	50.3196	51.9969	53.6742	55.3516	57.0289	58.7062	60.3835	62.0608	63.7382	65.4155	67.0928
333	.9653	.6426	.3200	.9973	.6746	.3520	.0293	.7066	.3840	.0613	.7386	.4159	.0933
336	.9656	.6430	.3203	.9977	.6750	.3524	.0297	.7070	.3844	.0617	.7391	.4164	.0938
339	.9660	.6433	.3207	.9980	.6754	.3527	.0301	.7075	.3848	.0622	.7395	.4169	.0942
342	.9663	.6437	.3210	.9984	.6758	.3531	.0305	.7079	.3852	.0626	.7400	.4174	.0947
419345	46.9666	48.6440	50.3214	51.9988	53.6762	55.3535	57.0309	58.7083	60.3857	62.0631	63.7404	65.4178	67.0952
348	.9670	.6444	.3218	.9992	.6765	.3539	.0313	.7087	.3861	.0635	.7409	.4183	.0857
351	.9673	.6447	.3221	.9995	.6769	.3543	.0317	.7091	.3865	.0639	.7414	.4188	.0962
354	.9676	.6451	.3225	.9999	.6773	.3547	.0321	.7096	.3870	.0644	.7418	.4192	.0966
357	.9680	.6454	.3228	52.0003	.6777	.3551	.0326	.7100	.3874	.0648	.7423	.4197	.0971
419360	46.9683	48.6458	50.3232	52.0006	53.6781	55.3555	57.0330	58.7104	60.3878	62.0653	63.7427	65.4202	67.0976
363	.9687	.6461	.3236	.0010	.6785	.3559	.0334	.7108	.3883	.0657	.7432	.4206	.0981
366	.9690	.6465	.3239	.0014	.6788	.3563	.0338	.7112	.3887	.0662	.7436	.4211	.0986
369	.9693	.6468	.3243	.0018	.6792	.3567	.0342	.7117	.3891	.0666	.7441	.4216	.0990
372	.9697	.6472	.3246	.0021	.6796	.3571	.0346	.7121	.3896	.0671	.7445	.4220	.0995
419375	46.9700	48.6475	50.3250	52.0025	53.6800	55.3575	57.0350	58.7125	60.3900	62.0675	63.7450	65.4225	67.1000
378	.9703	.6478	.3254	.0029	.6804	.3579	.0354	.7129	.3904	.0679	.7455	.4230	.1005
381	.9707	.6482	.3257	.0032	.6808	.3583	.0358	.7133	.3909	.0684	.7459	.4234	.1010
384	.9710	.6485	.3261	.0036	.6812	.3587	.0362	.7138	.3913	.0688	.7464	.4239	.1014
387	.9713	.6489	.3264	.0040	.6815	.3591	.0366	.7142	.3917	.0693	.7468	.4244	.1019
419390	46.9717	48.6492	50.3268	52.0044	53.6819	55.3595	57.0370	58.7146	60.3922	62.0697	63.7473	65.4248	67.1024
393	.9720	.6496	.3272	.0047	.6823	.3599	.0374	.7150	.3926	.0702	.7477	.4253	.1029
396	.9724	.6499	.3275	.0051	.6827	.3603	.0379	.7154	.3930	.0706	.7482	.4258	.1034
399	.9727	.6503	.3279	.0055	.6831	.3607	.0383	.7159	.3935	.0711	.7486	.4262	.1038
402	.9730	.6506	.3282	.0058	.6835	.3611	.0387	.7163	.3939	.0715	.7491	.4267	.1043
419405	46.9734	48.6510	50.3286	52.0062	53.6838	55.3615	57.0391	58.7167	60.3943	62.0719	63.7496	65.4272	67.1048
408	.9737	.6513	.3290	.0066	.6842	.3619	.0395	.7171	.3948	.0724	.7500	.4276	.1053
411	.9740	.6517	.3293	.0070	.6846	.3623	.0399	.7175	.3952	.0728	.7505	.4281	.1058
414	.9744	.6520	.3297	.0073	.6850	.3626	.0403	.7180	.3956	.0733	.7509	.4286	.1062
417	.9747	.6524	.3300	.0077	.6854	.3630	.0407	.7184	.3960	.0737	.7514	.4291	.1067
419420	46.9750	48.6527	50.3304	52.0081	53.6858	55.3634	57.0411	58.7188	60.3965	62.0742	63.7518	65.4295	67.1072
423	.9754	.6531	.3308	.0085	.6861	.3638	.0415	.7192	.3969	.0746	.7523	.4300	.1077
426	.9757	.6534	.3311	.0088	.6865	.3642	.0419	.7196	.3973	.0750	.7528	.4305	.1082
429	.9760	.6538	.3315	.0092	.6869	.3646	.0423	.7201	.3978	.0755	.7532	.4309	.1086
432	.9764	.6541	.3318	.0096	.6873	.3650	.0428	.7205	.3982	.0759	.7537	.4314	.1091
419435	46.9767	48.6545	50.3322	52.0099	53.6877	55.3654	57.0432	58.7209	60.3986	62.0764	63.7541	65.4319	67.1096
438	.9771	.6548	.3326	.0103	.6881	.3658	.0436	.7213	.3991	.0768	.7546	.4323	.1101
441	.9774	.6552	.3329	.0107	.6884	.3662	.0440	.7217	.3995	.0773	.7550	.4328	.1106
444	.9777	.6555	.3333	.0111	.6888	.3666	.0444	.7222	.3999	.0777	.7555	.4333	.1110
447	.9781	.6559	.3336	.0114	.6892	.3670	.0448	.7226	.4004	.0782	.7559	.4337	.1115
419450	46.9784	48.6562	50.3340	52.0118	53.6896	55.3674	57.0452	58.7230	60.4008	62.0786	63.7564	65.4342	67.1120
453	.9787	.6565	.3344	.0122	.6900	.3678	.0456	.7234	.4012	.0790	.7569	.4347	.1125
456	.9791	.6569	.3347	.0125	.6904	.3682	.0460	.7238	.4017	.0795	.7573	.4351	.1130
459	.9794	.6572	.3351	.0129	.6908	.3686	.0464	.7243	.4021	.0799	.7578	.4356	.1134
462	.9797	.6576	.3354	.0133	.6911	.3690	.0468	.7247	.4025	.0804	.7582	.4361	.1139
419465	46.9801	48.6579	50.3358	52.0137	53.6915	55.3694	57.0472	58.7251	60.4030	62.0808	63.7587	65.4365	67.1144
468	.9804	.6583	.3362	.0140	.6919	.3698	.0476	.7255	.4034	.0813	.7591	.4370	.1149
471	.9808	.6586	.3365	.0144	.6923	.3702	.0481	.7259	.4038	.0817	.7596	.4375	.1154
474	.9811	.6590	.3369	.0148	.6927	.3706	.0485	.7264	.4043	.0822	.7600	.4379	.1158
477	.9814	.6593	.3372	.0151	.6931	.3710	.0489	.7268	.4047	.0826	.7605	.4384	.1163
419480	46.9818	48.6597	50.3376	52.0155	53.6934	55.3714	57.0493	58.7272	60.4051	62.0830	63.7610	65.4389	67.1168
483	.9821	.6600	.3380	.0159	.6938	.3718	.0497	.7276	.4056	.0835	.7614	.4393	.1173
486	.9824	.6604	.3383	.0163	.6942	.3722	.0501	.7280	.4060	.0839	.7619	.4398	.1178
489	.9828	.6607	.3387	.0166	.6946	.3725	.0505	.7285	.4064	.0844	.7623	.4403	.1182
492	.9831	.6611	.3390	.0170	.6950	.3729	.0509	.7289	.4068	.0848	.7628	.4408	.1187
419495	46.9834	48.6614	50.3394	52.0174	53.6954	55.3733	57.0513	58.7293	60.4073	62.0853	63.7632	65.4412	67.1192
498	.9838	.6618	.3398	.0178	.6957	.3737	.0517	.7297	.4077	.0857	.7637	.4417	.1197
501	.9841	.6621	.3401	.0181	.6961	.3741	.0521	.7301	.4081	.0861	.7642	.4422	.1202
504	.9844	.6625	.3405	.0185	.6965	.3745	.0525	.7306	.4086	.0866	.7646	.4426	.1206
507	.9848	.6628	.3408	.0189	.6969	.3749	.0530	.7310	.4090	.0870	.7651	.4431	.1211
419510	46.9851	48.6632	50.3412	52.0192	53.6973	55.3753	57.0534	58.7314	60.4094	62.0875	63.7655	65.4436	67.1216
513	.9855	.6635	.3416	.0196	.6977	.3757	.0538	.7318	.4099	.0879	.7660	.4440	.1221
516	.9858	.6639	.3419	.0200	.6980	.3761	.0542	.7322	.4103	.0884	.7664	.4445	.1226
519	.9861	.6642	.3423	.0204	.6984	.3765	.0546	.7327	.4107	.0888	.7669	.4450	.1230
522	.9865	.6646	.3426	.0207	.6988	.3769	.0550	.7331	.4112	.0893	.7673	.4454	.1235
419525	46.9868	48.6649	50.3430	52.0211	53.6992	55.3773	57.0554	58.7335	60.4116	62.0897	63.7678	65.4459	67.1240
528	.9871	.6652	.3434	.0215	.6996	.3777	.0558	.7339	.4120	.0901	.7683	.4464	.1245
531	.9875	.6656	.3437	.0218	.7000	.3781	.0562	.7343	.4125	.0906	.7687	.4468	.1250
534	.9878	.6659	.3441	.0222	.7004	.3785	.0566	.7348	.4129	.0910	.7692	.4473	.1254
537	.9881	.6663	.3444	.0226	.7007	.3789	.0570	.7352	.4133	.0915	.7696	.4478	.1259
419540	46.9885	48.6666	50.3448	52.0230	53.7011	55.3793	57.0574	58.7356	60.4138	62.0919	63.7701	65.4482	67.1264
543	.9888	.6670	.3452	.0233	.7015	.3797	.0578	.7360	.4142	.0924	.7705	.4487	.1269
546	.9892	.6673	.3455	.0237	.7019	.3801	.0583	.7364	.4146	.0928	.7710	.4492	.1274
549	.9895	.6677	.3459	.0241	.7023	.3805	.0587	.7369	.4151	.0933	.7714	.4496	.1278
552	.9898	.6680	.3462	.0244	.7027	.3809	.0591	.7373	.4155	.0937	.7719	.4501	.1283
419555	46.9902	48.6684	50.3466	52.0248	53.7030	55.3813	57.0595	58.7377	60.4159	62.0941	63.7724	65.4506	67.1288
558	.9905	.6687	.3470	.0252	.7034	.3817	.0599	.7381	.4164	.0946	.7728	.4510	.1293
561	.9908	.6691	.3473	.0256	.7038	.3821	.0603	.7385	.4168	.0950	.7733	.4515	.1298
564	.9912	.6694	.3477	.0259	.7042	.3824	.0607	.7390	.4172	.0955	.7737	.4520	.1302
567	.9915	.6698	.3480	.0263	.7046	.3828	.0611	.7394	.4176	.0959	.7742	.4525	.1307
419570	46.9918	48.6701	50.3484	52.0267	53.7050	55.3832	57.0615	58.7398	60.4181	62.0964	63.7746	65.4529	67.1312
573	.9922	.6705	.3488	.0271	.7053	.3836	.0619	.7402	.4185	.0968	.7751	.4534	.1317
576	.9925	.6708	.3491	.0274	.7057	.3840	.0623	.7406	.4189	.0972	.7756	.4539	.1322
579	.9928	.6712	.3495	.0278	.7061	.3844	.0627	.7411	.4194	.0977	.7760	.4543	.1326
582	.9932	.6715	.3498	.0282	.7065	.3848	.0632	.7415	.4198	.0981	.7765	.4548	.1331
419585	46.9935	48.6719	50.3502	52.0285	53.7069	55.3852	57.0636	58.7419	60.4202	62.0986	63.7769	65.4553	67.1336
588	.9939	.6722	.3506	.0289	.7073	.3856	.0640	.7423	.4207	.0990	.7774	.4557	.1341
591	.9942	.6726	.3509	.0293	.7076	.3860	.0644	.7427	.4211	.0995	.7778	.4562	.1346
594	.9945	.6729	.3513	.0297	.7080	.3864	.0648	.7432	.4215	.0999	.7783	.4567	.1350
597	.9949	.6733	.3516	.0300	.7084	.3868	.0652	.7436	.4220	.1004	.7787	.4571	.1355
419600	46.9952	48.6736	50.3520	52.0304	53.7088	55.3872	57.0656	58.7440	60.4224	62.1008	63.7792	65.4576	67.1360

MEGACYCLES PER SECOND

HARMONICS

BASIC FREQ.	164	168	172	176	180	184	188	192	200	208	216	224	232
419300	68.7652	70.4424	72.1196	73.7968	75.4740	77.1512	78.8284	80.5056	83.8600	87.2144	90.5688	93.9232	97.2776
303	.7657	.4429	.1201	.7973	.4745	.1518	.8290	.5062	.8606	.2150	.5694	.9239	.2783
306	.7662	.4434	.1206	.7979	.4751	.1523	.8295	.5068	.8612	.2156	.5701	.9245	.2790
309	.7667	.4439	.1211	.7984	.4756	.1529	.8301	.5073	.8618	.2163	.5707	.9252	.2797
312	.7672	.4444	.1217	.7989	.4762	.1534	.8307	.5079	.8624	.2169	.5714	.9259	.2804
419315	68.7677	70.4449	72.1222	73.7994	75.4767	77.1540	78.8312	80.5085	83.8630	87.2175	90.5720	93.9266	97.2811
318	.7682	.4454	.1227	.8000	.4772	.1545	.8318	.5091	.8636	.2181	.5727	.9272	.2818
321	.7686	.4459	.1232	.8005	.4778	.1551	.8323	.5096	.8642	.2188	.5733	.9279	.2825
324	.7691	.4464	.1237	.8010	.4783	.1556	.8329	.5102	.8648	.2194	.5740	.9286	.2832
327	.7696	.4469	.1242	.8016	.4789	.1562	.8335	.5108	.8654	.2200	.5746	.9292	.2839
419330	68.7701	70.4474	72.1248	73.8021	75.4794	77.1567	78.8340	80.5114	83.8660	87.2206	90.5753	93.9299	97.2846
333	.7706	.4479	.1253	.8026	.4799	.1573	.8346	.5119	.8666	.2213	.5759	.9306	.2853
336	.7711	.4484	.1258	.8031	.4805	.1578	.8352	.5125	.8672	.2219	.5766	.9313	.2860
339	.7716	.4490	.1263	.8037	.4810	.1584	.8357	.5131	.8678	.2225	.5772	.9319	.2866
342	.7721	.4495	.1268	.8042	.4816	.1589	.8363	.5137	.8684	.2231	.5779	.9326	.2873
419345	68.7726	70.4500	72.1273	73.8047	75.4821	77.1595	78.8369	80.5142	83.8690	87.2238	90.5785	93.9333	97.2880
348	.7731	.4505	.1279	.8052	.4826	.1600	.8374	.5148	.8696	.2244	.5792	.9340	.2887
351	.7736	.4510	.1284	.8058	.4832	.1606	.8380	.5154	.8702	.2250	.5798	.9346	.2894
354	.7741	.4515	.1289	.8063	.4837	.1611	.8386	.5160	.8708	.2256	.5805	.9353	.2901
357	.7745	.4520	.1294	.8068	.4843	.1617	.8391	.5165	.8714	.2263	.5811	.9360	.2908
419360	68.7750	70.4525	72.1299	73.8074	75.4848	77.1622	78.8397	80.5171	83.8720	87.2269	90.5818	93.9366	97.2915
363	.7755	.4530	.1304	.8079	.4853	.1628	.8402	.5177	.8726	.2275	.5824	.9373	.2922
366	.7760	.4535	.1310	.8084	.4859	.1633	.8408	.5183	.8732	.2281	.5831	.9380	.2929
369	.7765	.4540	.1315	.8089	.4864	.1639	.8414	.5188	.8738	.2288	.5837	.9387	.2936
372	.7770	.4545	.1320	.8095	.4870	.1644	.8419	.5194	.8744	.2294	.5844	.9393	.2943
419375	68.7775	70.4550	72.1325	73.8100	75.4875	77.1650	78.8425	80.5200	83.8750	87.2300	90.5850	93.9400	97.2950
378	.7780	.4555	.1330	.8105	.4880	.1656	.8431	.5206	.8756	.2306	.5856	.9407	.2957
381	.7785	.4560	.1335	.8111	.4886	.1661	.8436	.5212	.8762	.2312	.5863	.9413	.2964
384	.7790	.4565	.1340	.8116	.4891	.1667	.8442	.5217	.8768	.2319	.5869	.9420	.2971
387	.7795	.4570	.1346	.8121	.4897	.1672	.8448	.5223	.8774	.2325	.5876	.9427	.2978
419390	68.7800	70.4575	72.1351	73.8126	75.4902	77.1678	78.8453	80.5229	83.8780	87.2331	90.5882	93.9434	97.2985
393	.7805	.4580	.1356	.8132	.4907	.1683	.8459	.5235	.8786	.2337	.5889	.9440	.2992
396	.7809	.4585	.1361	.8137	.4913	.1689	.8464	.5240	.8792	.2344	.5895	.9447	.2999
399	.7814	.4590	.1366	.8142	.4918	.1694	.8470	.5246	.8798	.2350	.5902	.9454	.3006
402	.7819	.4595	.1371	.8148	.4924	.1700	.8476	.5252	.8804	.2356	.5908	.9460	.3013
419405	68.7824	70.4600	72.1377	73.8153	75.4929	77.1705	78.8481	80.5258	83.8810	87.2362	90.5915	93.9467	97.3020
408	.7829	.4605	.1382	.8158	.4934	.1711	.8487	.5263	.8816	.2369	.5921	.9474	.3027
411	.7834	.4610	.1387	.8163	.4940	.1716	.8493	.5269	.8822	.2375	.5928	.9481	.3034
414	.7839	.4616	.1392	.8169	.4945	.1722	.8498	.5275	.8828	.2381	.5934	.9487	.3040
417	.7844	.4621	.1397	.8174	.4951	.1727	.8504	.5281	.8834	.2387	.5941	.9494	.3047
419420	68.7849	70.4626	72.1402	73.8179	75.4956	77.1733	78.8510	80.5286	83.8840	87.2394	90.5947	93.9501	97.3054
423	.7854	.4631	.1408	.8184	.4961	.1738	.8515	.5292	.8846	.2400	.5954	.9508	.3061
426	.7859	.4636	.1413	.8190	.4967	.1744	.8521	.5298	.8852	.2406	.5960	.9514	.3068
429	.7864	.4641	.1418	.8195	.4972	.1749	.8527	.5304	.8858	.2412	.5967	.9521	.3075
432	.7868	.4646	.1423	.8200	.4978	.1755	.8532	.5309	.8864	.2419	.5973	.9528	.3082
419435	68.7873	70.4651	72.1428	73.8206	75.4983	77.1760	78.8538	80.5315	83.8870	87.2425	90.5980	93.9534	97.3089
438	.7878	.4656	.1433	.8211	.4988	.1766	.8543	.5321	.8876	.2431	.5986	.9541	.3096
441	.7883	.4661	.1439	.8216	.4994	.1771	.8549	.5327	.8882	.2437	.5993	.9548	.3103
444	.7888	.4666	.1444	.8221	.4999	.1777	.8555	.5332	.8888	.2444	.5999	.9555	.3110
447	.7893	.4671	.1449	.8227	.5005	.1782	.8560	.5338	.8894	.2450	.6006	.9561	.3117
419450	68.7898	70.4676	72.1454	73.8232	75.5010	77.1788	78.8566	80.5344	83.8900	87.2456	90.6012	93.9568	97.3124
453	.7903	.4681	.1459	.8237	.5015	.1794	.8572	.5350	.8906	.2462	.6018	.9575	.3131
456	.7908	.4686	.1464	.8243	.5021	.1799	.8577	.5356	.8912	.2468	.6025	.9581	.3138
459	.7913	.4691	.1469	.8248	.5026	.1805	.8583	.5361	.8918	.2475	.6031	.9588	.3145
462	.7918	.4696	.1475	.8253	.5032	.1810	.8589	.5367	.8924	.2481	.6038	.9595	.3152
419465	68.7923	70.4701	72.1480	73.8258	75.5037	77.1816	78.8594	80.5373	83.8930	87.2487	90.6044	93.9602	97.3156
468	.7928	.4706	.1485	.8264	.5042	.1821	.8600	.5379	.8936	.2493	.6051	.9608	.3169
471	.7932	.4711	.1490	.8269	.5048	.1827	.8605	.5384	.8942	.2500	.6057	.9615	.3173
474	.7937	.4716	.1495	.8274	.5053	.1832	.8611	.5390	.8948	.2506	.6064	.9622	.3180
477	.7942	.4721	.1500	.8280	.5059	.1838	.8617	.5396	.8954	.2512	.6070	.9628	.3187
419480	68.7947	70.4726	72.1506	73.8285	75.5064	77.1843	78.8622	80.5402	83.8960	87.2518	90.6077	93.9635	97.3194
483	.7952	.4731	.1511	.8290	.5069	.1849	.8628	.5407	.8966	.2525	.6083	.9642	.3201
486	.7957	.4736	.1516	.8295	.5075	.1854	.8634	.5413	.8972	.2531	.6090	.9649	.2308
489	.7962	.4742	.1521	.8301	.5080	.1860	.8639	.5419	.8978	.2537	.6096	.9655	.3214
492	.7967	.4747	.1526	.8306	.5086	.1865	.8645	.5425	.8984	.2543	.6103	.9662	.3221
419495	68.7972	70.4752	72.1531	73.8311	75.5091	77.1871	78.8651	80.5430	83.8990	87.2550	90.6109	93.9669	97.3228
498	.7977	.4757	.1537	.8316	.5096	.1876	.8656	.5436	.8996	.2556	.6116	.9676	.3235
501	.7982	.4762	.1542	.8322	.5102	.1882	.8662	.5442	.9002	.2562	.6122	.9682	.3242
504	.7987	.4767	.1547	.8327	.5107	.1887	.8668	.5448	.9008	.2568	.6129	.9689	.3249
507	.7991	.4772	.1552	.8332	.5113	.1893	.8673	.5453	.9014	.2575	.6135	.9696	.3256
419510	68.7996	70.4777	72.1557	73.8338	75.5118	77.1898	78.8679	80.5459	83.9020	87.2581	90.6142	93.9702	97.3263
513	.8001	.4782	.1562	.8343	.5123	.1904	.8684	.5465	.9026	.2587	.6148	.9709	.3270
516	.8006	.4787	.1568	.8348	.5129	.1909	.8690	.5471	.9032	.2593	.6155	.9716	.3277
519	.8011	.4792	.1573	.8353	.5134	.1915	.8696	.5476	.9038	.2600	.6161	.9723	.3284
522	.8016	.4797	.1578	.8359	.5140	.1920	.8701	.5482	.9044	.2606	.6168	.9729	.3291
419525	68.8021	70.4802	72.1583	73.8364	75.5145	77.1926	78.8707	80.5488	83.9050	87.2612	90.6174	93.9736	97.3298
528	.8026	.4807	.1588	.8369	.5150	.1932	.8713	.5494	.9056	.2618	.6180	.9743	.3305
531	.8031	.4812	.1593	.8375	.5156	.1937	.8718	.5500	.9062	.2624	.6187	.9749	.3312
534	.8036	.4817	.1598	.8380	.5161	.1943	.8724	.5505	.9068	.2631	.6193	.9756	.3319
537	.8041	.4822	.1604	.8385	.5167	.1948	.8730	.5511	.9074	.2637	.6200	.9763	.3326
419540	68.8046	70.4827	72.1609	73.8390	75.5172	77.1954	78.8735	80.5517	83.9080	87.2643	90.6206	93.9770	97.3333
543	.8051	.4832	.1614	.8396	.5177	.1959	.8741	.5523	.9086	.2649	.6213	.9776	.3340
546	.8055	.4837	.1619	.8401	.5183	.1965	.8746	.5528	.9092	.2656	.6219	.9783	.3347
549	.8060	.4842	.1624	.8406	.5188	.1970	.8752	.5534	.9098	.2662	.6226	.9790	.3354
552	.8065	.4847	.1629	.8412	.5194	.1976	.8758	.5540	.9104	.2668	.6232	.9796	.3361
419555	68.8070	70.4852	72.1635	73.8417	75.5199	77.1981	78.8763	80.5546	83.9110	87.2674	90.6239	93.9803	97.3368
558	.8075	.4857	.1640	.8422	.5204	.1987	.8769	.5551	.9116	.2681	.6245	.9810	.3375
561	.8080	.4862	.1645	.8427	.5210	.1992	.8775	.5557	.9122	.2687	.6252	.9817	.3382
564	.8085	.4868	.1650	.8433	.5215	.1998	.8780	.5563	.9128	.2693	.6258	.9823	.3388
567	.8090	.4873	.1655	.8438	.5221	.2003	.8786	.5569	.9134	.2699	.6265	.9830	.3395
419570	68.8095	70.4878	72.1660	73.8443	75.5226	77.2009	78.8792	80.5574	83.9140	87.2706	90.6271	93.9837	97.3402
573	.8100	.4883	.1666	.8448	.5231	.2014	.8797	.5580	.9146	.2712	.6278	.9844	.3409
576	.8105	.4888	.1671	.8454	.5237	.2020	.8803	.5586	.9152	.2718	.6284	.9850	.3416
579	.8110	.4893	.1676	.8459	.5242	.2025	.8809	.5592	.9158	.2724	.6291	.9857	.3423
582	.8114	.4898	.1681	.8464	.5248	.2031	.8814	.5597	.9164	.2731	.6297	.9864	.3430
419585	68.8119	70.4903	72.1686	73.8470	75.5253	77.2036	78.8820	80.5603	83.9170	87.2737	90.6304	93.9870	97.3437
588	.8124	.4908	.1691	.8475	.5258	.2042	.8825	.5609	.9176	.2743	.6310	.9877	.3444
591	.8129	.4913	.1697	.8480	.5264	.2047	.8831	.5615	.9182	.2749	.6317	.9884	.3451
594	.8134	.4918	.1702	.8485	.5269	.2053	.8837	.5620	.9188	.2756	.6323	.9891	.3458
597	.8139	.4923	.1707	.8491	.5275	.2058	.8842	.5626	.9194	.2762	.6330	.9897	.3465
419600	68.8144	70.4928	72.1712	73.8496	75.5280	77.2064	78.8848	80.5632	83.9200	87.2768	90.6336	93.9904	97.3472

MEGACYCLES PER SECOND

HARMONICS

BASIC FREQ.	112	116	120	124	128	132	136	140	144	148	152	156	160
419600	46.9952	48.6736	50.3520	52.0304	53.7088	55.3872	57.0656	58.7440	60.4224	62.1008	63.7792	65.4576	67.1360
603	.9955	.6739	.3524	.0308	.7092	.3876	.0660	.7444	.4228	.1012	.7797	.4581	.1365
606	.9959	.6743	.3527	.0311	.7096	.3880	.0664	.7448	.4233	.1017	.7801	.4585	.1370
609	.9962	.6746	.3531	.0315	.7100	.3884	.0668	.7453	.4237	.1021	.7806	.4590	.1374
612	.9965	.6750	.3534	.0319	.7103	.3888	.0672	.7457	.4241	.1026	.7810	.4595	.1379
419615	46.9969	48.6753	50.3538	52.0323	53.7107	55.3892	57.0676	58.7461	60.4246	62.1030	63.7815	65.4599	67.1384
618	.9972	.6757	.3542	.0326	.7111	.3896	.0680	.7465	.4250	.1035	.7819	.4604	.1389
621	.9976	.6760	.3545	.0330	.7115	.3900	.0685	.7469	.4254	.1039	.7824	.4609	.1394
624	.9979	.6764	.3549	.0334	.7119	.3904	.0689	.7474	.4259	.1044	.7828	.4613	.1398
627	.9982	.6767	.3552	.0337	.7123	.3908	.0693	.7478	.4263	.1048	.7833	.4618	.1403
419630	46.9986	48.6771	50.3556	52.0341	53.7126	55.3912	57.0697	58.7482	60.4267	62.1052	63.7838	65.4623	67.1408
633	.9989	.6774	.3560	.0345	.7130	.3916	.0701	.7486	.4272	.1057	.7842	.4627	.1413
636	.9992	.6778	.3563	.0349	.7134	.3920	.0705	.7490	.4276	.1061	.7847	.4632	.1418
639	.9996	.6781	.3567	.0352	.7138	.3923	.0709	.7495	.4280	.1066	.7851	.4637	.1422
642	.9999	.6785	.3570	.0356	.7142	.3927	.0713	.7499	.4284	.1070	.7856	.4642	.1427
419645	47.0002	48.6788	50.3574	52.0360	53.7146	55.3931	57.0717	58.7503	60.4289	62.1075	63.7860	65.4646	67.1432
648	.0006	.6792	.3578	.0364	.7149	.3935	.0721	.7507	.4293	.1079	.7865	.4651	.1437
651	.0009	.6795	.3581	.0367	.7153	.3939	.0725	.7511	.4297	.1083	.7870	.4656	.1442
654	.0012	.6799	.3585	.0371	.7157	.3943	.0729	.7516	.4302	.1088	.7874	.4660	.1446
657	.0016	.6802	.3588	.0375	.7161	.3947	.0734	.7520	.4306	.1092	.7879	.4665	.1451
419660	47.0019	48.6806	50.3592	52.0378	53.7165	55.3951	57.0738	58.7524	60.4310	62.1097	63.7883	65.4670	67.1436
663	.0023	.6809	.3596	.0382	.7169	.3955	.0742	.7528	.4315	.1101	.7888	.4674	.1461
666	.0026	.6813	.3599	.0386	.7172	.3959	.0746	.7532	.4319	.1106	.7892	.4679	.1466
669	.0029	.6816	.3603	.0390	.7176	.3963	.0750	.7537	.4323	.1110	.7897	.4684	.1470
672	.0033	.6820	.3606	.0393	.7180	.3967	.0754	.7541	.4328	.1115	.7901	.4688	.1475
419675	47.0036	48.6823	50.3610	52.0397	53.7184	55.3971	57.0758	58.7545	60.4332	62.1119	63.7906	65.4693	67.1480
678	.0039	.6826	.3614	.0401	.7188	.3975	.0762	.7549	.4336	.1123	.7911	.4698	.1485
681	.0043	.6830	.3617	.0404	.7192	.3979	.0766	.7553	.4341	.1128	.7915	.4702	.1490
684	.0046	.6833	.3621	.0408	.7196	.3983	.0770	.7558	.4345	.1132	.7920	.4707	.1494
687	.0049	.6837	.3624	.0412	.7199	.3987	.0774	.7562	.4349	.1137	.7924	.4712	.1499
419690	47.0053	48.6840	50.3628	52.0416	53.7203	55.3991	57.0778	58.7566	60.4354	62.1141	63.7929	65.4716	67.1504
693	.0056	.6844	.3632	.0419	.7207	.3995	.0782	.7570	.4358	.1146	.7933	.4721	.1509
696	.0060	.6847	.3635	.0423	.7211	.3999	.0787	.7574	.4362	.1150	.7938	.4726	.1514
699	.0063	.6851	.3639	.0427	.7215	.4003	.0791	.7579	.4367	.1155	.7942	.4730	.1518
702	.0066	.6854	.3642	.0430	.7219	.4007	.0795	.7583	.4371	.1159	.7947	.4735	.1523
419705	47.0070	48.6858	50.3646	52.0434	53.7222	55.4011	57.0799	58.7587	60.4375	62.1163	63.7952	65.4740	67.1528
708	.0073	.6861	.3650	.0438	.7226	.4015	.0803	.7591	.4380	.1168	.7956	.4744	.1533
711	.0076	.6865	.3653	.0442	.7230	.4019	.0807	.7595	.4384	.1172	.7961	.4749	.1538
714	.0080	.6868	.3657	.0445	.7234	.4022	.0811	.7600	.4388	.1177	.7965	.4754	.1542
717	.0083	.6872	.3660	.0449	.7238	.4026	.0815	.7604	.4392	.1181	.7970	.4759	.1547
419720	47.0086	48.6875	50.3664	52.0453	53.7242	55.4030	57.0819	58.7608	60.4397	62.1186	63.7974	65.4763	67.1552
723	.0090	.6879	.3668	.0457	.7245	.4034	.0823	.7612	.4401	.1190	.7979	.4768	.1557
726	.0093	.6882	.3671	.0460	.7249	.4038	.0827	.7616	.4405	.1194	.7984	.4773	.1562
729	.0096	.6886	.3675	.0464	.7253	.4042	.0831	.7621	.4410	.1199	.7988	.4777	.1566
732	.0100	.6889	.3678	.0468	.7257	.4046	.0836	.7625	.4414	.1203	.7993	.4782	.1571
419735	47.0103	48.6893	50.3682	52.0471	53.7261	55.4050	57.0840	58.7629	60.4418	62.1208	63.7997	65.4787	67.1576
738	.0107	.6896	.3686	.0475	.7265	.4054	.0844	.7633	.4423	.1212	.8002	.4791	.1581
741	.0110	.6900	.3689	.0479	.7268	.4058	.0848	.7637	.4427	.1217	.8006	.4796	.1586
744	.0113	.6903	.3693	.0483	.7272	.4062	.0852	.7642	.4431	.1221	.8011	.4801	.1590
747	.0117	.6907	.3696	.0486	.7276	.4066	.0856	.7646	.4436	.1226	.8015	.4805	.1595
419750	47.0120	48.6910	50.3700	52.0490	53.7280	55.4070	57.0860	58.7650	60.4440	62.1230	63.8020	65.4810	67.1600
753	.0123	.6913	.3704	.0494	.7284	.4074	.0864	.7654	.4444	.1234	.8025	.4815	.1605
756	.0127	.6917	.3707	.0497	.7288	.4078	.0868	.7658	.4449	.1239	.8029	.4819	.1610
759	.0130	.6920	.3711	.0501	.7292	.4082	.0872	.7663	.4453	.1243	.8034	.4824	.1614
762	.0133	.6924	.3714	.0505	.7295	.4086	.0876	.7667	.4457	.1248	.8038	.4829	.1619
419765	47.0137	48.6927	50.3718	52.0509	53.7299	55.4090	57.0880	58.7671	60.4462	62.1252	63.8043	65.4833	67.1624
768	.0140	.6931	.3722	.0512	.7303	.4094	.0884	.7675	.4466	.1257	.8047	.4838	.1629
771	.0144	.6934	.3725	.0516	.7307	.4098	.0889	.7679	.4470	.1261	.8052	.4843	.1634
774	.0147	.6938	.3729	.0520	.7311	.4102	.0893	.7684	.4475	.1266	.8056	.4847	.1638
777	.0150	.6941	.3732	.0523	.7315	.4106	.0897	.7688	.4479	.1270	.8061	.4852	.1643
419780	47.0154	48.6945	50.3736	52.0527	53.7318	55.4110	57.0901	58.7692	60.4483	62.1274	63.8066	65.4857	67.1648
783	.0157	.6948	.3740	.0531	.7322	.4114	.0905	.7696	.4488	.1279	.8070	.4861	.1653
786	.0160	.6952	.3743	.0535	.7326	.4118	.0909	.7700	.4492	.1283	.8075	.4866	.1658
789	.0164	.6955	.3747	.0538	.7330	.4121	.0913	.7705	.4496	.1288	.8079	.4871	.1662
792	.0167	.6959	.3750	.0542	.7334	.4125	.0917	.7709	.4500	.1292	.8084	.4876	.1667
419795	47.0170	48.6962	50.3754	52.0546	53.7338	55.4129	57.0921	58.7713	60.4505	62.1297	63.8088	65.4880	67.1672
798	.0174	.6966	.3758	.0550	.7341	.4133	.0925	.7717	.4509	.1301	.8093	.4885	.1677
801	.0177	.6969	.3761	.0553	.7345	.4137	.0929	.7721	.4513	.1305	.8098	.4890	.1682
804	.0180	.6973	.3765	.0557	.7349	.4141	.0933	.7726	.4518	.1310	.8102	.4894	.1686
807	.0184	.6976	.3768	.0561	.7353	.4145	.0938	.7730	.4522	.1314	.8107	.4899	.1691
419810	47.0187	48.6980	50.3772	52.0564	53.7357	55.4149	57.0942	58.7734	60.4526	62.1319	63.8111	65.4904	67.1696
813	.0191	.6983	.3776	.0568	.7361	.4153	.0946	.7738	.4531	.1323	.8116	.4908	.1701
816	.0194	.6987	.3779	.0572	.7364	.4157	.0950	.7742	.4535	.1328	.8120	.4913	.1706
819	.0197	.6990	.3783	.0576	.7368	.4161	.0954	.7747	.4539	.1332	.8125	.4918	.1710
822	.0201	.6994	.3786	.0579	.7372	.4165	.0958	.7751	.4544	.1337	.8129	.4922	.1715
419825	47.0204	48.6997	50.3790	52.0583	53.7376	55.4169	57.0962	58.7755	60.4548	62.1341	63.8134	65.4927	67.1720
828	.0207	.7000	.3794	.0587	.7380	.4173	.0966	.7759	.4552	.1345	.8139	.4932	.1725
831	.0211	.7004	.3797	.0590	.7384	.4177	.0970	.7763	.4557	.1350	.8143	.4936	.1730
834	.0214	.7007	.3801	.0594	.7388	.4181	.0974	.7768	.4561	.1354	.8148	.4941	.1734
837	.0217	.7011	.3804	.0598	.7391	.4185	.0978	.7772	.4565	.1359	.8152	.4946	.1739
419840	47.0221	48.7014	50.3808	52.0602	53.7395	55.4189	57.0982	58.7776	60.4570	62.1363	63.8157	65.4950	67.1744
843	.0224	.7018	.3812	.0605	.7399	.4193	.0986	.7780	.4574	.1368	.8161	.4955	.1749
846	.0228	.7021	.3815	.0609	.7403	.4197	.0991	.7784	.4578	.1372	.8166	.4960	.1754
849	.0231	.7025	.3819	.0613	.7407	.4201	.0995	.7789	.4583	.1377	.8170	.4964	.1758
852	.0234	.7028	.3822	.0616	.7411	.4205	.0999	.7793	.4587	.1381	.8175	.4969	.1763
419855	47.0238	48.7032	50.3826	52.0620	53.7414	55.4209	57.1003	58.7797	60.4591	62.1385	63.8180	65.4974	67.1768
858	.0241	.7035	.3830	.0624	.7418	.4213	.1007	.7801	.4596	.1390	.8184	.4978	.1773
861	.0244	.7039	.3833	.0628	.7422	.4217	.1011	.7805	.4600	.1394	.8189	.4983	.1778
864	.0248	.7042	.3837	.0631	.7426	.4220	.1015	.7810	.4604	.1399	.8193	.4988	.1782
867	.0251	.7046	.3840	.0635	.7430	.4224	.1019	.7814	.4608	.1403	.8198	.4993	.1787
419870	47.0254	48.7049	50.3844	52.0639	53.7434	55.4228	57.1023	58.7818	60.4613	62.1408	63.8202	65.4997	67.1792
873	.0258	.7053	.3848	.0643	.7437	.4232	.1027	.7822	.4617	.1412	.8207	.5002	.1797
876	.0261	.7056	.3851	.0646	.7441	.4236	.1031	.7826	.4621	.1416	.8212	.5007	.1802
879	.0264	.7060	.3855	.0650	.7445	.4240	.1035	.7831	.4626	.1421	.8216	.5011	.1806
882	.0268	.7063	.3858	.0654	.7449	.4244	.1040	.7835	.4630	.1425	.8221	.5016	.1811
419885	47.0271	48.7067	50.3862	52.2657	53.7453	55.4248	57.1044	58.7839	60.4634	62.1430	63.8225	65.5021	67.1816
888	.0275	.7070	.3866	.0661	.7457	.4252	.1048	.7843	.4639	.1434	.8230	.5025	.1821
891	.0278	.7074	.3869	.0665	.7460	.4256	.1052	.7847	.4643	.1439	.8234	.5030	.1826
894	.0281	.7077	.3873	.0669	.7464	.4260	.1056	.7852	.4647	.1443	.8239	.5035	.1830
897	.0285	.7081	.3876	.0672	.7468	.4264	.1060	.7856	.4652	.1448	.8243	.5039	.1835
419900	47.0288	48.7084	50.3880	52.0676	53.7472	55.4268	57.1064	58.7860	60.4656	62.1452	63.8248	65.5044	67.1840

MEGACYCLES PER SECOND

HARMONICS

BASIC FREQ.	164	168	172	176	180	184	188	192	200	208	216	224	232
419600	68.8144	70.4928	72.1712	73.8496	75.5280	77.2064	78.8848	80.5632	83.9200	87.2768	90.6336	93.9904	97.3472
603	.8149	.4933	.1717	.8501	.5285	.2070	.8854	.5638	.9206	.2774	.6342	.9911	.3479
606	.8154	.4938	.1722	.8507	.5291	.2075	.8859	.5644	.9212	.2780	.6349	.9917	.3486
609	.8159	.4943	.1727	.8512	.5296	.2081	.8865	.5649	.9218	.2787	.6355	.9924	.3493
612	.8164	.4948	.1733	.8517	.5302	.2086	.8871	.5655	.9224	.2793	.6362	.9931	.3500
419615	68.8169	70.4953	72.1738	73.8522	75.5307	77.2092	78.8876	80.5661	83.9230	87.2799	90.6368	93.9938	97.3507
618	.8174	.4958	.1743	.8528	.5312	.2097	.8882	.5667	.9236	.2805	.6375	.9944	.3514
621	.8178	.4963	.1748	.8533	.5318	.2103	.8887	.5672	.9242	.2812	.6381	.9951	.3521
624	.8183	.4968	.1753	.8538	.5323	.2108	.8893	.5678	.9248	.2818	.6388	.9958	.3528
627	.8188	.4973	.1758	.8544	.5329	.2114	.8899	.5684	.9254	.2824	.6394	.9964	.3535
419630	68.8193	70.4978	72.1764	73.8549	75.5334	77.2119	78.8904	80.5690	83.9260	87.2830	90.6401	93.9971	97.3542
633	.8198	.4983	.1769	.8554	.5339	.2125	.8910	.5695	.9266	.2837	.6407	.9978	.3549
636	.8203	.4988	.1774	.8559	.5345	.2130	.8916	.5701	.9272	.2843	.6414	.9985	.3556
639	.8208	.4994	.1779	.8565	.5350	.2136	.8921	.5707	.9278	.2849	.6420	.9991	.3562
642	.8213	.4999	.1784	.8570	.5356	.2141	.8927	.5713	.9284	.2855	.6427	.9998	.3569
419645	68.8218	70.5004	72.1789	73.8575	75.5361	77.2147	78.8933	80.5718	83.9290	87.2862	90.6433	94.0005	97.3576
648	.8223	.5009	.1795	.8580	.5366	.2152	.8938	.5724	.9296	.2868	.6440	.0012	.3583
651	.8228	.5014	.1800	.8586	.5372	.2158	.8944	.5730	.9302	.2874	.6446	.0018	.3590
654	.8233	.5019	.1805	.8591	.5377	.2163	.8950	.5736	.9308	.2880	.6453	.0025	.3597
657	.8237	.5024	.1810	.8596	.5383	.2169	.8955	.5741	.9314	.2887	.6459	.0032	.3604
419660	68.8242	70.5029	72.1815	73.8602	75.5388	77.2174	78.8961	80.5747	83.9320	87.2893	90.6466	94.0038	97.3611
663	.8247	.5034	.1820	.8607	.5393	.2180	.8966	.5753	.9326	.2899	.6472	.0045	.3618
666	.8252	.5039	.1826	.8612	.5399	.2185	.8972	.5759	.9332	.2905	.6479	.0052	.3625
669	.8257	.5044	.1831	.8617	.5404	.2191	.8978	.5764	.9338	.2912	.6485	.0059	.3632
672	.8262	.5049	.1836	.8623	.5410	.2196	.8983	.5770	.9344	.2918	.6492	.0065	.3639
419675	68.8267	70.5054	72.1841	73.8628	75.5415	77.2202	78.8989	80.5776	83.9350	87.2924	90.6498	94.0072	97.3646
678	.8272	.5059	.1846	.8633	.5420	.2208	.8995	.5782	.9356	.2930	.6504	.0079	.3653
681	.8277	.5064	.1851	.8639	.5426	.2213	.9000	.5788	.9362	.2936	.6511	.0085	.3660
684	.8282	.5069	.1856	.8644	.5431	.2219	.9006	.5793	.9368	.2943	.6517	.0092	.3667
687	.8287	.5074	.1862	.8649	.5437	.2224	.9012	.5799	.9374	.2949	.6524	.0099	.3674
419690	68.8292	70.5079	72.1867	73.8654	75.5442	77.2230	78.9017	80.5805	83.9380	87.2955	90.6530	94.0106	97.3681
693	.8297	.5084	.1872	.8660	.5447	.2235	.9023	.5811	.9386	.2961	.6537	.0112	.3688
696	.8301	.5089	.1877	.8665	.5453	.2241	.9028	.5816	.9392	.2968	.6543	.0119	.3695
699	.8306	.5094	.1882	.8670	.5458	.2246	.9034	.5822	.9398	.2974	.6550	.0126	.3702
702	.8311	.5099	.1887	.8676	.5464	.2252	.9040	.5828	.9404	.2980	.6556	.0132	.3709
419705	68.8316	70.5104	72.1893	73.8681	75.5469	77.2257	78.9045	80.5834	83.9410	87.2986	90.6563	94.0139	97.3716
708	.8321	.5109	.1898	.8686	.5474	.2263	.9051	.5839	.9416	.2993	.6569	.0146	.3723
711	.8326	.5114	.1903	.8691	.5480	.2268	.9057	.5845	.9422	.2999	.6576	.0153	.3730
714	.8331	.5120	.1908	.8697	.5485	.2274	.9062	.5851	.9428	.3005	.6582	.0159	.3736
717	.8336	.5125	.1913	.8702	.5491	.2279	.9068	.5857	.9434	.3011	.6589	.0166	.3743
419720	68.8341	7.05130	72.1918	73.8707	75.5496	77.2285	78.9074	80.5862	83.9440	87.3018	90.6595	94.0173	97.3750
723	.8346	.5135	.1924	.8712	.5501	.2290	.9079	.5868	.9446	.3024	.6602	.0180	.3757
726	.8351	.5140	.1929	.8718	.5507	.2296	.9085	.5874	.9452	.3030	.6608	.0186	.3764
729	.8356	.5145	.1934	.8723	.5512	.2301	.9091	.5880	.9458	.3036	.6615	.0193	.3771
732	.8360	.5150	.1939	.8728	.5518	.2307	.9096	.5885	.9464	.3043	.6621	.0200	.3778
419735	68.8365	70.5155	72.1944	73.8734	75.5523	77.2312	78.9102	80.5891	83.9470	87.3049	90.6628	94.0206	97.3785
738	.8370	.5160	.1949	.8739	.5528	.2318	.9107	.5897	.9476	.3055	.6634	.0213	.3792
741	.8375	.5165	.1955	.8744	.5534	.2323	.9113	.5903	.9482	.3061	.6641	.0220	.3799
744	.8380	.5170	.1960	.8749	.5539	.2329	.9119	.5908	.9488	.3068	.6647	.0227	.3806
747	.8385	.5175	.1965	.8755	.5545	.2334	.9124	.5914	.9494	.3074	.6654	.0233	.3813
419750	68.8390	70.5180	72.1970	73.8760	75.5550	77.2340	78.9130	80.5920	83.9500	87.3080	90.6660	94.0240	97.3820
753	.8395	.5185	.1975	.8765	.5555	.2346	.9136	.5926	.9506	.3086	.6666	.0247	.3827
756	.8400	.5190	.1980	.8771	.5561	.2351	.9141	.5932	.9512	.3092	.6673	.0253	.3834
759	.8405	.5195	.1985	.8776	.5566	.2357	.9147	.5937	.9518	.3099	.6679	.0260	.3841
762	.8410	.5200	.1991	.8781	.5572	.2362	.9153	.5943	.9524	.3105	.6686	.0267	.3848
419765	68.8415	70.5205	72.1996	73.8786	75.5577	77.2368	78.9158	80.5949	83.9530	87.3111	90.6692	94.0274	97.3855
768	.8420	.5210	.2001	.8792	.5582	.2373	.9164	.5955	.9536	.3117	.6699	.0280	.3862
771	.8424	.5215	.2006	.8797	.5588	.2379	.9169	.5960	.9542	.3124	.6705	.0287	.3869
774	.8429	.5220	.2011	.8802	.5593	.2384	.9175	.5966	.9548	.3130	.6712	.0294	.3876
777	.8434	.5225	.2016	.8808	.5599	.2390	.9181	.5972	.9554	.3136	.6718	.0300	.3883
419780	68.8439	70.5230	72.2022	73.8813	75.5604	77.2395	78.9186	80.5978	83.9560	87.3142	90.6725	94.0307	97.3890
783	.8444	.5235	.2027	.8818	.5609	.2401	.9192	.5983	.9566	.3149	.6731	.0314	.3897
786	.8449	.5240	.2032	.8823	.5615	.2406	.9198	.5989	.9572	.3155	.6738	.0321	.3904
789	.8454	.5246	.2037	.8829	.5620	.2412	.9203	.5995	.9578	.3161	.6744	.0327	.3910
792	.8459	.5251	.2042	.8834	.5626	.2417	.9209	.6001	.9584	.3167	.6751	.0334	.3917
419795	68.8464	70.5256	72.2047	73.8839	75.5631	77.2423	78.9215	80.6006	83.9590	87.3174	90.6757	94.0341	97.3924
798	.8469	.5261	.2053	.8844	.5636	.2428	.9220	.6012	.9596	.3180	.6764	.0348	.3931
801	.8474	.5266	.2058	.8850	.5642	.2434	.9226	.6018	.9602	.3186	.6770	.0354	.3938
804	.8479	.5271	.2063	.8855	.5647	.2439	.9232	.6024	.9608	.3192	.6777	.0361	.3945
807	.8483	.5276	.2068	.8860	.5653	.2445	.9237	.6029	.9614	.3199	.6783	.0368	.3952
419810	68.8488	70.5281	72.2073	73.8866	75.5658	77.2450	78.9243	80.6035	83.9620	87.3205	90.6790	94.0374	97.3959
813	.8493	.5286	.2078	.8871	.5663	.2456	.9248	.6041	.9626	.3211	.6796	.0381	.3966
816	.8498	.5291	.2084	.8876	.5669	.2461	.9254	.6047	.9632	.3217	.6803	.0388	.3973
819	.8503	.5296	.2089	.8881	.5674	.2467	.9260	.6052	.9638	.3224	.6809	.0395	.3980
822	.8508	.5301	.2094	.8887	.5680	.2472	.9265	.6058	.9644	.3230	.6816	.0401	.3987
419825	68.8513	70.5306	72.2099	73.8892	75.5685	77.2478	78.9271	80.6064	83.9650	87.3236	90.6822	94.0408	97.3994
828	.8518	.5311	.2104	.8897	.5690	.2484	.9277	.6070	.9656	.3242	.6828	.0415	.4001
831	.8523	.5316	.2109	.8903	.5696	.2489	.9282	.6076	.9662	.3248	.6835	.0421	.4008
834	.8528	.5321	.2114	.8908	.5701	.2495	.9288	.6081	.9668	.3255	.6841	.0428	.4015
837	.8533	.5326	.2120	.8913	.5707	.2500	.9294	.6087	.9674	.3261	.6848	.0435	.4022
419840	68.8538	70.5331	72.2125	73.8918	75.5712	77.2506	78.9299	80.6093	83.9680	87.3267	90.6854	94.0442	97.4029
843	.8543	.5336	.2130	.8924	.5717	.2511	.9305	.6099	.9686	.3273	.6861	.0448	.4036
846	.8547	.5341	.2135	.8929	.5723	.2517	.9310	.6104	.9692	.3280	.6867	.0455	.4043
849	.8552	.5346	.2140	.8934	.5728	.2522	.9316	.6110	.9698	.3286	.6874	.0462	.4050
852	.8557	.5351	.2145	.8940	.5734	.2528	.9322	.6116	.9704	.3292	.6880	.0468	.4057
419855	68.8562	70.5356	72.2151	73.8945	75.5739	77.2533	78.9327	80.6122	83.9710	87.3298	90.6887	94.0475	97.4064
858	.8567	.5361	.2156	.8950	.5744	.2539	.9333	.6127	.9716	.3305	.6893	.0482	.4071
861	.8572	.5366	.2161	.8955	.5750	.2544	.9339	.6133	.9722	.3311	.6900	.0489	.4078
864	.8577	.5372	.2166	.8961	.5755	.2550	.9344	.6139	.9728	.3317	.6906	.0495	.4084
867	.8582	.5377	.2171	.8966	.5761	.2555	.9350	.6145	.9734	.3323	.6913	.0502	.4091
419870	68.8587	70.5382	72.2176	73.8971	75.5766	77.2561	78.9356	80.6150	83.9740	87.3330	90.6919	94.0509	97.4098
873	.8592	.5387	.2182	.8976	.5771	.2566	.9361	.6156	.9746	.3336	.6926	.0516	.4105
876	.8597	.5392	.2187	.8982	.5777	.2572	.9367	.6162	.9752	.3342	.6932	.0522	.4112
879	.8602	.5397	.2192	.8987	.5782	.2577	.9373	.6168	.9758	.3348	.6939	.0529	.4119
882	.8606	.5402	.2197	.8992	.5788	.2583	.9378	.6173	.9764	.3355	.6945	.0536	.4126
419885	68.8611	70.5407	72.2202	73.8998	75.5793	77.2588	78.9384	80.6179	83.9770	87.3361	90.6952	94.0542	97.4133
888	.8616	.5412	.2207	.9003	.5798	.2594	.9389	.6185	.9776	.3367	.6958	.0549	.4140
891	.8621	.5417	.2213	.9008	.5804	.2599	.9395	.6191	.9782	.3373	.6965	.0556	.4147
894	.8626	.5422	.2218	.9013	.5809	.2605	.9401	.6196	.9788	.3380	.6971	.0563	.4154
897	.8631	.5427	.2223	.9019	.5815	.2610	.9406	.6202	.9794	.3386	.6978	.0569	.4161
419900	68.8636	70.5432	72.2228	73.9024	75.5820	77.2616	78.9412	80.6208	83.9800	87.3392	90.6984	94.0576	97.4168

MEGACYCLES PER SECOND

HARMONICS

BASIC FREQ.	112	116	120	124	128	132	136	140	144	148	152	156	160
419900	47.0288	48.7084	50.3880	52.0676	53.7472	55.4268	57.1064	58.7860	60.4656	62.1452	63.8248	65.5044	67.1840
903	.0291	.7087	.3884	.0680	.7476	.4272	.1068	.7864	.4660	.1456	.8253	.5049	.1845
906	.0295	.7091	.3887	.0683	.7480	.4276	.1072	.7868	.4665	.1461	.8257	.5053	.1850
909	.0298	.7094	.3891	.0687	.7484	.4280	.1076	.7873	.4669	.1465	.8262	.5058	.1854
912	.0301	.7098	.3894	.0691	.7487	.4284	.1080	.7877	.4673	.1470	.8266	.5063	.1859
419915	47.0305	48.7101	50.3898	52.0695	53.7491	55.4288	57.1084	58.7881	60.4678	62.1474	63.8271	65.5067	67.1864
918	.0308	.7105	.3902	.0698	.7495	.4292	.1088	.7885	.4682	.1479	.8275	.5072	.1869
921	.0312	.7108	.3905	.0702	.7499	.4296	.1093	.7889	.4686	.1483	.8280	.5077	.1874
924	.0315	.7112	.3909	.0706	.7503	.4300	.1097	.7894	.4691	.1488	.8284	.5081	.1878
927	.0318	.7115	.3912	.0709	.7507	.4304	.1101	.7898	.4695	.1492	.8289	.5086	.1883
419930	47.0322	48.7119	50.3916	52.0713	53.7510	55.4308	57.1105	58.7902	60.4699	62.1496	63.8294	65.5091	67.1888
933	.0325	.7122	.3920	.0717	.7514	.4312	.1109	.7906	.4704	.1501	.8298	.5095	.1893
936	.0328	.7126	.3923	.0721	.7518	.4316	.1113	.7910	.4708	.1505	.8303	.5100	.1898
939	.0332	.7129	.3927	.0724	.7522	.4319	.1117	.7915	.4712	.1510	.8307	.5105	.1902
942	.0335	.7133	.3930	.0728	.7526	.4323	.1121	.7919	.4716	.1514	.8312	.5110	.1907
419945	47.0338	48.7136	50.3934	52.0732	53.7530	55.4327	57.1125	58.7923	60.4721	62.1519	63.8316	65.5114	67.1912
948	.0342	.7140	.3938	.0736	.7533	.4331	.1129	.7927	.4725	.1523	.8321	.5119	.1917
951	.0345	.7143	.3941	.0739	.7537	.4335	.1133	.7931	.4729	.1527	.8326	.5124	.1922
954	.0348	.7147	.3945	.0743	.7541	.4339	.1137	.7936	.4734	.1532	.8330	.5128	.1926
957	.0352	.7150	.3948	.0747	.7545	.4343	.1142	.7940	.4738	.1536	.8335	.5133	.1931
419960	47.0355	48.7154	50.3952	52.0750	53.7549	55.4347	57.1146	58.7944	60.4742	62.1541	63.8339	65.5138	66.1936
963	.0359	.7157	.3956	.0754	.7553	.4351	.1150	.7948	.4747	.1545	.8344	.5142	.1941
966	.0362	.7161	.3959	.0758	.7556	.4355	.1154	.7952	.4751	.1550	.8348	.5147	.1946
969	.0365	.7164	.3963	.0762	.7560	.4359	.1158	.7957	.4755	.1554	.8353	.5152	.1950
972	.0369	.7168	.3966	.0765	.7564	.4363	.1162	.7961	.4760	.1559	.8357	.5156	.1955
419975	47.0372	48.7171	50.3970	52.0769	53.7568	55.4367	57.1166	58.7965	60.4764	62.1563	63.8362	65.5161	66.1960
978	.0375	.7174	.3974	.0773	.7572	.4371	.1170	.7969	.4768	.1567	.8367	.5166	.1965
981	.0379	.7178	.3977	.0776	.7576	.4375	.1174	.7973	.4773	.1572	.8371	.5170	.1970
984	.0382	.7181	.3981	.0780	.7580	.4379	.1178	.7978	.4777	.1576	.8376	.5175	.1974
987	.0385	.7185	.3984	.0784	.7583	.4383	.1182	.7982	.4781	.1581	.8380	.5180	.1979
419990	47.0389	48.7188	50.3988	52.0788	53.7587	55.4387	57.1186	58.7986	60.4786	62.1585	63.8385	65.5184	67.1984
993	.0392	.7192	.3992	.0791	.7591	.4391	.1190	.7990	.4790	.1590	.8389	.5189	.1989
996	.0396	.7195	.3995	.0795	.7595	4395	.1195	.7994	.4794	.1594	.8394	.5194	.1994
999	.0399	.7199	.3999	.0799	.7599	.4399	.1199	.7999	.4799	.1599	.8398	.5198	.1998
420002	.0402	.7202	.4002	.0802	.7603	.4403	.1203	.8003	.4803	.1603	.8403	.5203	.2003
420005	47.0406	48.7206	50.4006	52.0806	53.7606	55.4407	57.1207	58.8007	60.4807	62.1607	63.8408	65.5208	67.2008
008	.0409	.7209	.4010	.0810	.7610	.4411	.1211	.8011	.4812	.1612	.8412	.5212	.2013
011	.0412	.7213	.4013	.0814	.7614	.4415	.1215	.8015	.4816	.1616	.8417	.5217	.2018
014	.0416	.7216	.4017	.0817	.7618	.4418	.1219	.8020	.4820	.1621	.8421	.5222	.2022
017	.0419	.7220	.4020	.0821	.7622	.4422	.1223	.8024	.4824	.1625	.8426	.5227	.2027
420020	47.0422	48.7223	50.4024	52.0825	53.7626	55.4426	57.1227	58.8028	60.4829	62.1630	63.8430	65.5231	67.2032
023	.0426	.7227	.4028	.0829	.7629	.4430	.1231	.8032	.4833	.1634	.8435	.5236	.2037
026	.0429	.7230	.4031	.0832	.7633	.4434	.1235	.8036	.4837	.1638	.8440	.5241	.2042
029	.0432	.7234	.4035	.0836	.7637	.4438	.1239	.8041	.4842	.1643	.8444	.5245	.2046
032	.0436	.7237	.4038	.0840	.7641	.4442	.1244	.8045	.4846	.1647	.8449	.5250	.2051
420035	47.0439	48.7241	50.4042	52.0843	53.7645	55.4446	57.1248	58.8049	60.4850	62.1652	63.8453	65.5255	67.2056
038	.0443	.7244	.4046	.0847	.7649	.4450	.1252	.8053	.4855	.1656	.8458	.5259	.2061
041	.0446	.7248	.4049	.0851	.7652	.4454	.1256	.8057	.4859	.1661	.8462	.5264	.2066
044	.0449	.7251	.4053	.0955	.7656	.4458	.1260	.8062	.4863	.1665	.8467	.5269	.2070
047	.0453	.7255	.4056	.0858	.7660	.4462	.1264	.8066	.4868	.1670	.8471	.5273	.2075
420050	47.0456	48.7258	50.4060	52.0862	53.7664	55.4466	57.1268	58.8070	60.4872	62.1674	63.8476	65.5278	67.2080
053	.0459	.7261	.4064	.0866	.7668	.4470	.1272	.8074	.4876	.1678	.8481	.5283	.2085
056	.0463	.7265	.4067	.0869	.7672	.4474	.1276	.8078	.4881	.1683	.8485	.5287	.2090
059	.0466	.7268	.4071	.0873	.7676	.4478	.1280	.8083	.4885	.1687	.8490	.5292	.2094
062	.0469	.7272	.4074	.0877	.7679	.4482	.1284	.8087	.4889	.1692	.8494	.5297	.2099
420065	47.0473	48.7275	50.4078	52.0881	53.7683	55.4486	57.1288	58.8091	60.4894	62.1696	63.8499	65.5301	67.2104
068	.0476	.7279	.4082	.0884	.7687	.4490	.1292	.8095	.4898	.1701	.8503	.5306	.2109
071	.0480	.7282	.4085	.0888	.7691	.4494	.1297	.8099	.4902	.1705	.8508	.5311	.2114
074	.0483	.7286	.4089	.0892	.7695	.4498	.1301	.8104	.4907	.1710	.8512	.5315	.2118
077	.0486	.7289	.4092	.0895	.7699	.4502	.1305	.8108	.4911	.1714	.8517	.5320	.2123
420080	47.0490	48.7293	50.4096	52.0899	53.7702	55.4506	57.1309	58.8112	60.4915	62.1718	63.8522	65.5325	67.2128
083	.0493	.7296	.4100	.0903	.7706	.4510	.1313	.8116	.4920	.1723	.8526	.5329	.2133
086	.0496	.7300	.4103	.0907	.7710	.4514	.1317	.8120	.4924	.1727	.8531	.5334	.2138
089	.0500	.7303	.4107	.0910	.7714	.4517	.1321	.8125	.4928	.1732	.8535	.5339	.2142
092	.0503	.7307	.4110	.0914	.7718	.4521	.1325	.8129	.4932	.1736	.8540	.5344	.2147
420095	47.0506	48.7310	50.4114	52.0918	53.7722	55.4525	57.1329	58.8133	60.4937	62.1741	63.8544	65.5348	67.2152
098	.0510	.7314	.4118	.0922	.7725	.4529	.1333	.8137	.4941	.1745	.8549	.5353	.2157
101	.0513	.7317	.4121	.0925	.7729	.4533	.1337	.8141	.4945	.1749	.8554	.5358	.2162
104	.0516	.7321	.4125	.0929	.7733	.4537	.1341	.8146	.4950	.1754	.8558	.5362	.2166
107	.0520	.7324	.4128	.0933	.7737	.4541	.1346	.8150	.4954	.1758	.8563	.5367	.2171
420110	47.0523	48.7328	50.4132	52.0936	53.7741	55.4545	57.1350	58.8154	60.4958	62.1763	63.8567	65.5372	67.2176
113	.0527	.7331	.4136	.0940	.7745	.4549	.1354	.8158	.4963	.1767	.8572	.5376	.2181
116	.0530	.7335	.4139	.0944	.7748	.4553	.1358	.8162	.4967	.1772	.8576	.5381	.2186
119	.0533	.7338	.4143	.0948	.7752	.4557	.1362	.8167	.4971	.1776	.8581	.5386	.2190
122	.0537	.7342	.4146	.0951	.7756	.4561	.1366	.8171	.4976	.1781	.8585	.5390	.2195
420125	47.0540	48.7345	50.4150	52.0955	53.7760	55.4565	57.1370	58.8175	60.4980	62.1785	63.8590	65.5395	67.2200
128	.0543	.7348	.4154	.0959	.7764	.4569	.1374	.8179	.4984	.1789	.8595	.5400	.2205
131	.0547	.7352	.4157	.0962	.7768	.4573	.1378	.8183	.4989	.1794	.8599	.5404	.2210
134	.0550	.7355	.4161	.0966	.7772	.4577	.1382	.8188	.4993	.1798	.8604	.5409	.2214
137	.0553	.7359	.4164	.0970	.7775	.4581	.1386	.8192	.4997	.1803	.8608	.5414	.2219
420140	47.0557	48.7362	50.4168	52.0974	53.7779	55.4585	57.1390	58.8196	60.5002	62.1807	63.8613	65.5418	67.2224
143	.0560	.7366	.4172	.0977	.7783	.4589	.1394	.8200	.5006	.1812	.8617	.5423	.2229
146	.0564	.7369	.4175	.0981	.7787	.4593	.1399	.8204	.5010	.1816	.8622	.5428	.2234
149	.0567	.7373	.4179	.0985	.7791	.4597	.1403	.8209	.5015	.1821	.8626	.5432	.2238
152	.0570	.7376	.4182	.0988	.7795	.4601	.1407	.8213	.5019	.1825	.8631	.5437	.2243
420155	47.0574	48.7380	50.4186	52.0992	53.7798	55.4605	57.1411	58.8217	60.5023	62.1829	63.8636	65.5442	67.2248
158	.0577	.7383	.4190	.0996	.7802	.4609	.1415	.8221	.5028	.1834	.8640	.5446	.2253
161	.0580	.7387	.4193	.1000	.7806	.4613	.1419	.8225	.5032	.1838	.8645	.5451	.2258
164	.0584	.7390	.4197	.1003	.7810	.4616	.1423	.8230	.5036	.1843	.8649	.5456	.2262
167	.0587	.7394	.4200	.1007	.7814	.4620	.1427	.8234	.5040	.1847	.8654	.5461	.2267
420170	47.0590	48.7397	50.4204	52.1011	53.7818	55.4624	57.1431	58.8238	60.5045	62.1852	63.8658	65.5465	67.2272
173	.0594	.7401	.4208	.1015	.7821	.4628	.1435	.8242	.5049	.1856	.8663	.5470	.2277
176	.0597	.7404	.4211	.1018	.7825	.4632	.1439	.8246	.5053	.1860	.8668	.5475	.2282
179	.0600	.7408	.4215	.1022	.7829	.4636	.1443	.8251	.5058	.1865	.8672	.5479	.2286
182	.0604	.7411	.4218	.1026	.7833	.4640	.1448	.8255	.5062	.1869	.8677	.5484	.2291
420185	47.0607	48.7415	50.4222	52.1029	53.7837	55.4644	57.1452	58.8259	60.5066	62.1874	63.8681	65.5489	67.2296
188	.0611	.7418	.4226	.1033	.7841	.4648	.1456	.8263	.5071	.1878	.8686	.5493	.2301
191	.0614	.7422	.4229	.1037	.7844	.4652	.1460	.8267	.5075	.1883	.8690	.5498	.2306
194	.0617	.7425	.4233	.1041	.7848	.4656	.1464	.8272	.5079	.1887	.8695	.5503	.2310
197	.0621	.7429	.4236	.1044	.7852	.4660	.1468	.8276	.5084	.1892	.8699	.5507	.2315
420200	47.0624	48.7432	50.4240	52.1048	53.7856	55.4664	57.1472	58.8280	60.5088	62.1896	63.8704	65.5512	67.2320

MEGACYCLES PER SECOND

HARMONICS

BASIC FREQ.	164	168	172	176	180	184	188	192	200	208	216	224	232
419900	68.8636	70.5432	72.2228	73.9024	75.5820	77.2616	78.9412	80.6208	83.9800	87.3392	90.6984	94.0576	97.4168
903	.8641	.5437	.2233	.9029	.5825	.2622	.9418	.6214	.9806	.3398	.6990	.0583	.4175
906	.8646	.5442	.2238	.9035	.5831	.2627	.9423	.6220	.9812	.3404	.6997	.0589	.4182
909	.8651	.5447	.2243	.9040	.5836	.2633	.9429	.6225	.9818	.3411	.7003	.0596	.4189
912	.8656	.5452	.2249	.9045	.5842	.2638	.9435	.6231	.9824	.3417	.7010	.0603	.4196
419915	68.8661	70.5457	72.2254	73.9050	75.5847	77.2644	78.9440	80.6237	83.9830	87.3423	90.7016	94.0610	97.4203
918	.8666	.5462	.2259	.9056	.5852	.2649	.9446	.6243	.9836	.3429	.7023	.0616	.4210
921	.8670	.5467	.2264	.9061	.5858	.2655	.9451	.6248	.9842	.3436	.7029	.0623	.4217
924	.8675	.5472	.2269	.9066	.5863	.2660	.0457	.6254	.9848	.3442	.7036	.0630	.4224
927	.8680	.5477	.2274	.9072	.5869	.2666	.9463	.6260	.9854	.3448	.7042	.0636	.4231
419930	68.8685	70.5482	72.2280	73.9077	75.5874	77.2671	78.9468	80.6266	83.9860	87.3454	90.7049	94.0643	97.4238
933	.8690	.5487	.2285	.9082	.5879	.2677	.9474	.6271	.9866	.3461	.7055	.0650	.4245
936	.8695	.5492	.2290	.9087	.5885	.2682	.9480	.6277	.9872	.3467	.7062	.0657	.4252
939	.8700	.5498	.2295	.9093	.5890	.2688	.9485	.6283	.9878	.3473	.7068	.0663	.4258
942	.8705	.5503	.2300	.9098	.5896	.2693	.9491	.6289	.9884	.3479	.7075	.0670	.4265
419945	68.8710	70.5508	72.2305	73.9103	75.5901	77.2699	78.9497	80.6294	83.9890	87.3486	90.7081	94.0677	97.4272
948	.8715	.5513	.2311	.9108	.5906	.2704	.9502	.6300	.9896	.3492	.7088	.0684	.4279
951	.8720	.5518	.2316	.9114	.5912	.2710	.9508	.6306	.9902	.3498	.7094	.0690	.4286
954	.8725	.5523	.2321	.9119	.5917	.2715	.9514	.6312	.9908	.3504	.7101	.0697	.4293
957	.8729	.5528	.2326	.9124	.5923	.2721	.9519	.6317	.9914	.3511	.7107	.0704	.4300
419960	68.8734	70.5533	72.2331	73.9130	75.5928	77.2726	78.9525	80.6323	83.9920	87.3517	90.7114	94.0710	97.4307
963	.8739	.5538	.2336	.9135	.5933	.2732	.9530	.6329	.9926	.3523	.7120	.0717	.4314
966	.8744	.5543	.2342	.9140	.5939	.2737	.9536	.6335	.9932	.3529	.7127	.0724	.4321
969	.8749	.5548	.2347	.9145	.5944	.2743	.9542	.6340	.9938	.3536	.7133	.0731	.4328
972	.8754	.5553	.2352	.9151	.5950	.2748	.9547	.6346	.9944	.3542	.7140	.0737	.4335
419975	68.8759	70.5558	72.2357	73.9156	75.5955	77.2754	78.9553	80.6352	83.9950	87.3548	90.7146	94.0744	97.4342
978	.8764	.5563	.2362	.9161	.5960	.2760	.9559	.6358	.9956	.3554	.7152	.0751	.4349
981	.8769	.5568	.2367	.9167	.5966	.2765	.9564	.6364	.9962	.3560	.7159	.0757	.4356
984	.8774	.5573	.2372	.9172	.5971	.2771	.9570	.6369	.9968	.3567	.7165	.0764	.4363
987	.8779	.5578	.2378	.9177	.5977	.2776	.9576	.6375	.9974	.3573	.7172	.0771	.4370
419990	68.8784	70.5583	72.2383	73.9182	75.5982	77.2782	78.9581	80.6381	83.9980	87.3579	90.7178	94.0778	97.4377
993	.8789	.5588	.2388	.9188	.5987	.2787	.9587	.6387	.9986	.3585	.7185	.0784	.4384
996	.8793	.5593	.2393	.9193	.5993	.2793	.9592	.6392	.9992	.3592	.7191	.0791	.4391
999	.8798	.5598	.2398	.9198	.5998	.2798	.9598	.6398	.9998	.3598	.7198	.0798	.4398
420002	.8803	.5603	.2403	.9204	.6004	.2804	.9604	.6404	84.0004	.3604	.7204	.0804	.4405
420005	68.8808	70.5608	72.2409	73.9209	75.6009	77.2809	78.9609	80.6410	84.0010	87.3610	90.7211	94.0811	97.4412
008	.8813	.5613	.2414	.9214	.6014	.2815	.9615	.6415	.0016	.3617	.7217	.0818	.4419
011	.8818	.5618	.2419	.9219	.6020	.2820	.9621	.6421	.0022	.3623	.7224	.0825	.4426
014	.8823	.5624	.2424	.9225	.6025	.2826	.9626	.6427	.0028	.3629	.7230	.0831	.4432
017	.8828	.5629	.2429	.9230	.6031	.2831	.9632	.6433	.0034	.3635	.7237	.0838	.4439
420020	68.8833	70.5634	72.2434	73.9235	75.6036	77.2837	78.9638	80.6438	84.0040	87.3642	90.7243	94.0845	97.4446
023	.8838	.5639	.2440	.9240	.6041	.2842	.9643	.6444	.0046	.3648	.7250	.0852	.4453
026	.8843	.5644	.2445	.9246	.6047	.2848	.9649	.6450	.0052	.3654	.7256	.0858	.4460
029	.8848	.5649	.2450	.9251	.6052	.2853	.9655	.6456	.0058	.3660	.7263	.0865	.4467
032	.8852	.5654	.2455	.9256	.6058	.2859	.9660	.6461	.0064	.3667	.7269	.0872	.4474
420035	68.8857	70.5659	72.2460	73.9262	75.6063	77.2864	78.9666	80.6467	84.0070	87.3673	90.7276	94.0878	97.4481
038	.8862	.5664	.2465	.9267	.6068	.2870	.9671	.6473	.0076	.3679	.7282	.0885	.4488
041	.8867	.5669	.2471	.9272	.6074	.2875	.9677	.6479	.0082	.3685	.7289	.0892	.4495
044	.8872	.5674	.2476	.9277	.6079	.2881	.9683	.6484	.0088	.3692	.7295	.0899	.4502
047	.8877	.5679	.2481	.9283	.6085	.2886	.9688	.6490	.0094	.3698	.7302	.0905	.4509
420050	68.8882	70.5684	72.2486	73.9288	75.6090	77.2892	78.9694	80.6496	84.0100	87.3704	90.7308	94.0912	97.4516
053	.8887	.5689	.2491	.9293	.6095	.2898	.9700	.6502	.0106	.3710	.7314	.0919	.4523
056	.8892	.5694	.2496	.9299	.6101	.2903	.9705	.6508	.0112	.3716	.7321	.0925	.4530
059	.8897	.5699	.2501	.9304	.6106	.2909	.9711	.6513	.0118	.3723	.7327	.0932	.4537
062	.8902	.5704	.2507	.9309	.6112	.2914	.9717	.6519	.0124	.3729	.7334	.0939	.4544
420065	68.8907	70.5709	72.2512	73.9314	75.6117	77.2920	78.9722	80.6525	84.0130	87.3735	90.7340	94.0946	97.4551
068	.8912	.5714	.2517	.9320	.6122	.2925	.9728	.6531	.0136	.3741	.7347	.0952	.4558
071	.8916	.5719	.2522	.9325	.6128	.2931	.9733	.6536	.0142	.3748	.7353	.0959	.4565
074	.8921	.5724	.2527	.9330	.6133	.2936	.9739	.6542	.0148	.3754	.7360	.0966	.4572
077	.8926	.5729	.2532	.9336	.6139	.2942	.9745	.6548	.0154	.3760	.7366	.0972	.4579
420080	68.8931	70.5734	72.2538	73.9341	75.6144	77.2947	78.9750	80.6554	84.0160	87.3766	90.7373	94.0979	97.4586
083	.8936	.5739	.2543	.9346	.6149	.2953	.9756	.6559	.0166	.3773	.7379	.0986	.4593
086	.8941	.5744	.2548	.9351	.6155	.2958	.9762	.6565	.0172	.3779	.7386	.0993	.4600
089	.8946	.5750	.2553	.9357	.6160	.2964	.9767	.6571	.0178	.3785	.7392	.0999	.4606
092	.8951	.5755	.2558	.9362	.6166	.2969	.9773	.6577	.0184	.3791	.7399	.1006	.4613
420095	68.8956	70.5760	72.2563	73.9367	75.6171	77.2975	78.9779	80.6582	84.0190	87.3798	90.7405	94.1013	97.4620
098	.8961	.5765	.2569	.9372	.6176	.2980	.9784	.6588	.0196	.3804	.7412	.1020	.4627
101	.8966	.5770	.2574	.9378	.6182	.2986	.9790	.6594	.0202	.3810	.7418	.1026	.4634
104	.8971	.5775	.2579	.9383	.6187	.2991	.9796	.6600	.0208	.3816	.7425	.1033	.4641
107	.8975	.5780	.2584	.9388	.6193	.2997	.9801	.6605	.0214	.3823	.7431	.1040	.4648
420110	68.8980	70.5785	72.2589	73.9394	75.6198	77.3002	78.9807	80.6611	84.0220	87.3829	90.7438	94.1046	97.4655
113	.8985	.5790	.2594	.9399	.6203	.3008	.9812	.6617	.0226	.3835	.7444	.1053	.4662
116	.8990	.5795	.2600	.9404	.6209	.3013	.9818	.6623	.0232	.3841	.7451	.1060	.4669
119	.8995	.5800	.2605	.9409	.6214	.3019	.9824	.6628	.0238	.3848	.7457	.1067	.4676
122	.9000	.5805	.2610	.9415	.6220	.3024	.9829	.6634	.0244	.3854	.7464	.1073	.4683
420125	68.9005	70.5810	72.2615	73.9420	75.6225	77.3030	78.9835	80.6640	84.0250	87.3860	90.7470	94.1080	97.4690
128	.9010	.5815	.2620	.9425	.6230	.3036	.9841	.6646	.0256	.3866	.7476	.1087	.4697
131	.9015	.5820	.2625	.9431	.6236	.3041	.9846	.6652	.0262	.3872	.7483	.1093	.4704
134	.9020	.5825	.2630	.9436	.6241	.3047	.9852	.6657	.0268	.3879	.7489	.1100	.4711
137	.9025	.5830	.2636	.9441	.6247	.3052	.9858	.6663	.0274	.3885	.7496	.1107	.4718
420140	68.9030	70.5835	72.2641	73.9446	75.6252	77.3058	78.9863	80.6669	84.0280	87.3891	90.7502	94.1114	97.4725
143	.9035	.5840	.2646	.9452	.6257	.3063	.9869	.6675	.0286	.3897	.7509	.1120	.4732
146	.9039	.5845	.2651	.9457	.6263	.3069	.9874	.6680	.0292	.3904	.7515	.1127	.4739
149	.9044	.5850	.2656	.9462	.6268	.3074	.9880	.6686	.0298	.3910	.7522	.1134	.4746
152	.9049	.5855	.2661	.9468	.6274	.3080	.9886	.6692	.0304	.3916	.7528	.1140	.4753
420155	68.9054	70.5860	72.2667	73.9473	75.6279	77.3085	78.9891	80.6698	84.0310	87.3922	90.7535	94.1147	97.4760
158	.9059	.5865	.2672	.9478	.6284	.3091	.9897	.6703	.0316	.3929	.7541	.1154	.4767
161	.9064	.5870	.2677	.9483	.6290	.3096	.9903	.6709	.0322	.3935	.7548	.1161	.4774
164	.9069	.5876	.2682	.9489	.6295	.3102	.9908	.6715	.0328	.3941	.7554	.1167	.4780
167	.9074	.5881	.2687	.9494	.6301	.3107	.9914	.6721	.0334	.3947	.7561	.1174	.4787
420170	68.9079	70.5886	72.2692	73.9499	75.6306	77.3113	78.9920	80.6726	84.0340	87.3954	90.7567	94.1181	97.4794
173	.9084	.5891	.2698	.9504	.6311	.3118	.9925	.6732	.0346	.3960	.7574	.1188	.4801
176	.9089	.5896	.2703	.9510	.6317	.3124	.9931	.6738	.0352	.3966	.7580	.1194	.4808
179	.9094	.5901	.2708	.9515	.6322	.3129	.9937	.6744	.0358	.3972	.7587	.1201	.4815
182	.9098	.5906	.2713	.9520	.6328	.3135	.9942	.6749	.0364	.3979	.7593	.1208	.4822
420185	68.9103	70.5911	72.2718	73.9526	75.6333	77.3140	78.9948	80.6755	84.0370	87.3985	90.7600	94.1214	97.4829
188	.9108	.5916	.2723	.9531	.6338	.3146	.9953	.6761	.0376	.3991	.7606	.1221	.4836
191	.9113	.5921	.2729	.9536	.6344	.3151	.9959	.6767	.0382	.3997	.7613	.1228	.4843
194	.9118	.5926	.2734	.9541	.6349	.3157	.9965	.6772	.0388	.4004	.7619	.1235	.4850
197	.9123	.5931	.2739	.9547	.6355	.3162	.9970	.6778	.0394	.4010	.7626	.1241	.4857
420200	68.9128	70.5936	72.2744	73.9552	75.6360	77.3168	78.9976	80.6784	84.0400	87.4016	90.7632	94.1248	97.4864

HARMONICS

BASIC FREQ.	112	116	120	124	128	132	136	140	144	148	152	156	160
420200	47.0624	48.7432	50.4240	52.1048	53.7856	55.4664	57.1472	58.8280	60.5088	62.1896	63.8704	65.5512	67.2320
203	.0627	.7435	.4244	.1052	.7860	.4668	.1476	.8284	.5092	.1900	.8709	.5517	.2325
206	.0631	.7439	.4247	.1055	.7864	.4672	.1480	.8288	.5097	.1905	.8713	.5521	.2330
209	.0634	.7442	.4251	.1059	.7868	.4676	.1484	.8293	.5101	.1909	.8718	.5526	.2334
212	.0637	.7446	.4254	.1063	.7871	.4680	.1488	.8297	.5105	.1914	.8722	.5531	.2339
420215	47.0641	48.7449	50.4258	52.1067	53.7875	55.4684	57.1492	58.8301	60.5110	62.1918	63.8727	65.5535	67.2344
218	.0644	.7453	.4262	.1070	.7879	.4688	.1496	.8305	.5114	.1923	.8731	.5540	.2349
221	.0648	.7456	.4265	.1074	.7883	.4692	.1501	.8309	.5118	.1927	.8736	.5545	.2354
224	.0651	.7460	.4269	.1078	.7887	.4696	.1505	.8314	.5123	.1932	.8740	.5549	.2358
227	.0654	.7463	.4272	.1081	.7891	.4700	.1509	.8318	.5127	.1936	.8745	.5554	.2363
420230	47.0658	48.7467	50.4276	52.1085	53.7894	55.4704	57.1513	58.8322	60.5131	62.1940	63.8750	65.5559	67.2368
233	.0661	.7470	.4280	.1089	.7898	.4708	.1517	.8326	.5136	.1945	.8754	.5563	.2373
236	.0664	.7474	.4283	.1093	.7902	.4712	.1521	.8330	.5140	.1949	.8759	.5568	.2378
239	.0668	.7477	.4287	.1096	.7906	.4715	.1525	.8335	.5144	.1954	.8763	.5573	.2382
242	.0671	.7481	.4290	.1100	.7910	.4719	.1529	.8339	.5148	.1958	.8768	.5578	.2387
420245	47.0674	48.7484	50.4294	52.1104	53.7914	55.4723	57.1533	58.8343	60.5153	62.1963	63.8772	65.5582	67.2392
248	.0678	.7488	.4298	.1108	.7917	.4727	.1537	.8347	.5157	.1967	.8777	.5587	.2397
251	.0681	.7491	.4301	.1111	.7921	.4731	.1541	.8351	.5161	.1971	.8782	.5592	.2402
254	.0684	.7495	.4305	.1115	.7925	.4735	.1545	.8356	.5166	.1976	.8786	.5596	.2406
257	.0688	.7498	.4308	.1119	.7929	.4739	.1550	.8360	.5170	.1980	.8791	.5601	.2411
520260	47.0691	48.7502	50.4312	52.1122	53.7933	55.4743	57.1554	58.8364	60.5174	62.1985	63.8795	65.5606	67.2416
263	.0695	.7505	.4316	.1126	.7937	.4747	.1558	.8368	.5179	.1989	.8800	.5610	.2421
266	.0698	.7509	.4319	.1130	.7940	.4751	.1562	.8372	.5183	.1994	.8804	.5615	.2426
269	.0701	.7512	.4323	.1134	.7944	.4755	.1566	.8377	.5187	.1998	.8809	.5620	.2430
272	.0705	.7516	.4326	.1137	.7948	.4759	.1570	.8381	.5192	.2003	.8813	.5624	.2435
420275	47.0708	48.7519	50.4330	52.1141	53.7952	55.4763	57.1574	58.8385	60.5196	62.2007	63.8818	65.5629	67.2440
278	.0711	.7522	.4334	.1145	.7956	.4767	.1578	.8389	.5200	.2011	.8823	.5634	.2445
281	.0715	.7526	.4337	.1148	.7960	.4771	.1582	.8393	.5205	.2016	.8827	.5638	.2450
284	.0718	.7529	.4341	.1152	.7964	.4775	.1586	.8398	.5209	.2020	.8832	.5643	.2454
287	.0721	.7533	.4344	.1156	.7967	.4779	.1590	.8402	.5213	.2025	.8836	.5648	.2459
420290	47.0725	48.7536	50.4348	52.1160	53.7971	55.4783	57.1594	58.8406	60.5218	62.2029	63.8841	65.5652	67.2464
293	.0728	.7540	.4352	.1163	.7975	.4787	.1598	.8410	.5222	.2034	.8845	.5657	.2469
296	.0732	.7543	.4355	.1167	.7979	.4791	.1603	.8414	.5226	.2038	.8850	.5662	.2474
299	.0735	.7547	.4359	.1171	.7983	.4795	.1607	.8419	.5231	.2043	.8854	.5666	.2478
302	.0738	.7550	.4362	.1174	.7987	.4799	.1611	.8423	.5235	.2047	.8859	.5671	.2483
420305	47.0742	48.7554	50.4366	52.1178	53.7990	55.4803	57.1615	58.8427	60.5239	62.2051	63.8864	65.5676	67.2488
308	.0745	.7557	.4370	.1182	.7994	.4807	.1619	.8431	.5244	.2056	.8868	.5680	.2493
311	.0748	.7561	.4373	.1186	.7998	.4811	.1623	.8435	.5248	.2060	.8873	.5685	.2498
314	.0752	.7564	.4377	.1189	.8002	.4814	.1627	.8440	.5252	.2065	.8877	.5690	.2502
317	.0755	.7568	.4380	.1193	.8006	.4818	.1631	.8444	.5256	.2069	.8882	.5695	.2507
420320	47.0758	48.7571	50.4384	52.1197	53.8010	55.4822	57.1635	58.8448	60.5261	62.2074	63.8886	65.5699	67.2512
323	.0762	.7575	.4388	.1201	.8013	.4826	.1639	.8452	.5265	.2078	.8891	.5704	.2517
326	.0765	.7578	.4391	.1204	.8017	.4830	.1643	.8456	.5269	.2082	.8896	.5709	.2522
329	.0768	.7582	.4395	.1208	.8021	.4834	.1647	.8461	.5274	.2087	.8900	.5713	.2526
332	.0772	.7585	.4398	.1212	.8025	.4838	.1652	.8465	.5278	.2091	.8905	.5718	.2531
420335	47.0775	48.7589	50.4402	52.1215	53.8029	55.4842	57.1656	58.8469	60.5282	62.2096	63.8909	65.5723	67.2536
338	.0779	.7592	.4406	.1219	.8033	.4846	.1660	.8473	.5287	.2100	.8914	.5727	.2541
341	.0782	.7596	.4409	.1223	.8036	.4850	.1664	.8477	.5291	.2105	.8918	.5732	.2546
344	.0785	.7599	.4413	.1227	.8040	.4854	.1668	.8482	.5295	.2109	.8923	.5737	.2550
347	.0789	.7603	.4416	.1230	.8044	.4858	.1672	.8486	.5300	.2114	.8927	.5741	.2555
420350	47.0792	48.7606	50.4420	52.1234	53.8048	55.4862	57.1676	58.8490	60.5304	62.2118	63.8932	65.5746	67.2560
353	.0795	.7609	.4424	.1238	.8052	.4866	.1680	.8494	.5308	.2122	.8937	.5751	.2565
356	.0799	.7613	.4427	.1241	.8056	.4870	.1684	.8498	.5313	.2127	.8941	.5755	.2570
359	.0802	.7616	.4431	.1245	.8060	.4874	.1688	.8503	.5317	.2131	.8946	.5760	.2574
362	.0805	.7620	.4434	.1249	.8063	.4878	.1692	.8507	.5321	.2136	.8950	.5765	.2579
420365	47.0809	48.7623	50.4438	52.1253	53.8067	55.4882	57.1696	58.8511	60.5326	62.2140	63.8955	65.5769	67.2584
368	.0812	.7627	.4442	.1256	.8071	.4886	.1700	.8515	.5330	.2145	.8959	.5774	.2589
371	.0816	.7630	.4445	.1260	.8075	.4890	.1705	.8519	.5334	.2149	.8964	.5779	.2594
374	.0819	.7634	.4449	.1264	.8079	.4894	.1709	.8524	.5339	.2154	.8968	.5783	.2598
377	.0822	.7637	.4452	.1267	.8083	.4898	.1713	.8528	.5343	.2158	.8973	.5788	.2603
420380	47.0826	48.7641	50.4456	52.1271	53.8086	55.4902	57.1717	58.8532	60.5347	62.2162	63.8978	65.5793	67.2608
383	.0829	.7644	.4460	.1275	.8090	.4906	.1721	.8536	.5352	.2167	.8982	.5797	.2613
386	.0832	.7648	.4463	.1279	.8094	.4910	.1725	.8540	.5356	.2171	.8987	.5802	.2618
389	.0836	.7651	.4467	.1282	.8098	.4913	.1729	.8545	.5360	.2176	.8991	.5807	.2622
392	.0839	.7655	.4470	.1286	.8102	.4917	.1733	.8549	.5364	.2180	.8996	.5812	.2627
420395	47.0842	48.7658	50.4474	52.1290	53.8106	55.4921	57.1737	58.8553	60.5369	62.2185	63.9000	65.5816	67.2632
398	.0846	.7662	.4478	.1294	.8109	.4925	.1741	.8557	.5373	.2189	.9005	.5821	.2637
401	.0849	.7665	.4481	.1297	.8113	.4929	.1745	.8561	.5377	.2193	.9010	.5826	.2642
404	.0852	.7669	.4485	.1301	.8117	.4933	.1749	.8566	.5382	.2198	.9014	.5830	.2646
407	.0856	.7672	.4488	.1305	.8121	.4937	.1754	.8570	.5386	.2202	.9019	.5835	.2651
420410	47.0859	48.7676	50.4492	52.1308	53.8125	55.4941	57.1758	58.8574	60.5390	62.2207	63.9023	65.5840	67.2656
413	.0863	.7679	.4496	.1312	.8129	.4945	.1762	.8578	.5395	.2211	.9028	.5844	.2661
416	.0866	.7683	.4499	.1316	.8132	.4949	.1766	.8582	.5399	.2216	.9032	.5849	.2666
419	.0869	.7686	.4503	.1320	.8136	.4953	.1770	.8587	.5403	.2220	.9037	.5854	.2670
422	.0873	.7690	.4506	.1323	.8140	.4957	.1774	.8591	.5408	.2225	.9041	.5858	.2675
420425	47.0876	48.7693	50.4510	52.1327	53.8144	55.4961	57.1778	58.8595	60.5412	62.2229	63.9046	65.5863	67.2680
428	.0879	.7696	.4514	.1331	.8148	.4965	.1782	.8599	.5416	.2233	.9051	.5868	.2685
431	.0883	.7700	.4517	.1334	.8152	.4969	.1786	.8603	.5421	.2238	.9055	.5872	.2690
434	.0886	.7703	.4521	.1338	.8156	.4973	.1790	.8608	.5425	.2242	.9060	.5877	.2694
437	.0889	.7707	.4524	.1342	.8159	.4977	.1794	.8612	.5429	.2247	.9064	.5882	.2699
420440	47.0893	48.7710	50.4528	52.1346	53.8163	55.4981	57.1798	58.8616	60.5434	62.2251	63.9069	65.5886	67.2704
443	.0896	.7714	.4532	.1349	.8167	.4985	.1802	.8620	.5438	.2256	.9073	.5891	.2709
446	.0900	.7717	.4535	.1353	.8171	.4989	.1807	.8624	.5442	.2260	.9078	.5896	.2714
449	.0903	.7721	.4539	.1357	.8175	.4993	.1811	.8629	.5447	.2265	.9082	.5900	.2718
452	.0906	.7724	.4542	.1360	.8179	.4997	.1815	.8633	.5451	.2269	.9087	.5905	.2723
420455	47.0910	48.7728	50.4546	52.1364	53.8182	55.5001	57.1819	58.8637	60.5455	62.2273	63.9092	65.5910	67.2728
458	.0913	.7731	.4550	.1368	.8186	.5005	.1823	.8641	.5460	.2278	.9096	.5914	.2733
461	.0916	.7735	.4553	.1372	.8190	.5009	.1827	.8645	.5464	.2282	.9101	.5919	.2738
464	.0920	.7738	.4557	.1375	.8194	.5012	.1831	.8650	.5468	.2287	.9105	.5924	.2742
467	.0923	.7742	.4560	.1379	.8198	.5016	.1835	.8654	.5472	.2291	.9110	.5929	.2747
420470	47.0926	48.7745	50.4564	52.1383	53.8202	55.5020	57.1839	58.8658	60.5477	62.2296	63.9114	65.5933	67.2752
473	.0930	.7749	.4568	.1387	.8205	.5024	.1843	.8662	.5481	.2300	.9119	.5938	.2757
476	.0933	.7752	.4571	.1390	.8209	.5028	.1847	.8666	.5485	.2304	.9124	.5943	.2762
479	.0936	.7756	.4575	.1394	.8213	.5032	.1851	.8671	.5490	.2309	.9128	.5947	.2766
482	.0940	.7759	.4578	.1398	.8217	.5036	.1856	.8675	.5494	.2313	.9133	.5952	.2771
420485	47.0943	48.7763	50.4582	52.1401	53.8221	55.5040	57.1860	58.8679	60.5498	62.2318	63.9137	65.5957	67.2776
488	.0947	.7766	.4586	.1405	.8225	.5044	.1864	.8683	.5503	.2322	.9142	.5961	.2781
491	.0950	.7770	.4589	.1409	.8228	.5048	.1868	.8687	.5507	.2327	.9146	.5966	.2786
494	.0953	.7773	.4593	.1413	.8232	.5052	.1872	.8692	.5511	.2331	.9151	.5971	.2790
497	.0957	.7777	.4596	.1416	.8236	.5056	.1876	.8696	.5516	.2336	.9155	.5975	.2795
420500	47.0960	48.7780	50.4600	52.1420	53.8240	55.5060	57.1880	58.8700	60.5520	62.2340	63.9160	65.5980	67.2800

MEGACYCLES PER SECOND

HARMONICS

BASIC FREQ.	164	168	172	176	180	184	188	192	200	208	216	224	232
420200	68.9128	70.5936	72.2744	73.9552	75.6360	77.3168	78.9976	80.6784	84.0400	87.4016	90.7632	94.1248	97.4864
203	.9133	.5941	.2749	.9557	.6365	.3174	.9982	.6790	.0406	.4022	.7638	.1255	.4871
206	.9138	.5946	.2754	.9563	.6371	.3179	.9987	.6796	.0412	.4028	.7645	.1261	.4878
209	.9143	.5951	.2759	.9568	.6376	.3185	.9993	.6801	.0418	.4035	.7651	.1268	.4885
212	.9148	.5956	.2765	.9573	.6382	.3190	.9999	.6807	.0424	.4041	.7658	.1275	.4892
420215	68.9153	70.5961	72.2770	73.9578	75.6387	77.3196	79.0004	80.6813	84.0430	87.4047	90.7664	94.1282	97.4899
218	.9158	.5966	.2775	.9584	.6392	.3201	.0010	.6819	.0436	.4053	.7671	.1288	.4906
221	.9162	.5971	.2780	.9589	.6398	.3207	.0015	.6824	.0442	.4060	.7677	.1295	.4913
224	.9167	.5976	.2785	.9594	.6403	.3212	.0021	.6830	.0448	.4066	.7684	.1302	.4920
227	.9172	.5981	.2790	.9600	.6409	.3218	.0027	.6836	.0454	.4072	.7690	.1308	.4927
420230	68.9177	70.5986	72.2796	73.9605	75.6414	77.3223	79.0032	80.6842	84.0460	87.4078	90.7697	94.1315	97.4934
233	.9182	.5991	.2801	.9610	.6419	.3229	.0038	.6847	.0466	.4085	.7703	.1322	.4941
236	.9187	.5996	.2806	.9615	.6425	.3234	.0044	.6853	.0472	.4091	.7710	.1329	.4948
239	.9192	.6002	.2811	.9621	.6430	.3240	.0049	.6859	.0478	.4097	.7716	.1335	.4954
242	.9197	.6007	.2816	.9626	.6436	.3245	.0055	.6865	.0484	.4103	.7723	.1342	.4961
420245	68.9202	70.6012	72.2821	73.9631	75.6441	77.3251	79.0061	80.6870	84.0490	87.4110	90.7729	94.1349	97.4968
248	.9207	.6017	.2827	.9636	.6446	.3256	.0066	.6876	.0496	.4116	.7736	.1356	.4975
251	.9212	.6022	.2832	.9642	.6452	.3262	.0072	.6882	.0502	.4122	.7742	.1362	.4982
254	.9217	.6027	.2837	.9647	.6457	.3267	.0078	.6888	.0508	.4128	.7749	.1369	.4989
257	.9221	.6032	.2842	.9652	.6463	.3273	.0083	.6893	.0514	.4135	.7755	.1376	.4996
420260	68.9226	70.6037	72.2847	73.9658	75.6468	77.3278	79.0089	80.6899	84.0520	87.4141	90.7762	94.1382	97.5003
263	.9231	.6042	.2852	.9663	.6473	.3284	.0094	.6905	.0526	.4147	.7768	.1389	.5010
266	.9236	.6047	.2858	.9668	.6479	.3289	.0100	.6911	.0532	.4153	.7775	.1396	.5017
269	.9241	.6052	.2863	.9673	.6484	.3295	.0106	.6916	.0538	.4160	.7781	.1403	.5024
272	.9246	.6057	.2868	.9679	.6490	.3300	.0111	.6922	.0544	.4166	.7788	.1409	.5031
420275	68.9251	70.6062	72.2873	73.9684	75.6495	77.3306	79.0117	80.6928	84.0550	87.4172	90.7794	94.1416	97.5038
278	.9256	.6067	.2878	.9689	.6500	.3312	.0123	.6934	.0556	.4178	.7800	.1423	.5045
281	.9261	.6072	.2883	.9695	.6506	.3317	.0128	.6940	.0562	.4184	.7807	.1429	.5052
284	.9266	.6077	.2888	.9700	.6511	.3323	.0134	.6945	.0568	.4191	.7813	.1436	.5059
287	.9271	.6082	.2894	.9705	.6517	.3328	.0140	.6951	.0574	.4197	.7820	.1443	.5066
420290	68.9276	70.6087	72.2899	73.9710	75.6522	77.3334	79.0145	80.6957	84.0580	87.4203	90.7826	94.1450	97.5073
293	.9281	.6092	.2904	.9716	.6527	.3339	.0151	.6963	.0586	.4209	.7833	.1456	.5080
296	.9285	.6097	.2909	.9721	.6533	.3345	.0156	.6968	.0592	.4216	.7839	.1463	.5087
299	.9290	.6102	.2914	.9726	.6538	.3350	.0162	.6974	.0598	.4222	.7846	.1470	.5094
302	.9295	.6107	.2919	.9732	.6544	.3356	.0168	.6980	.0604	.4228	.7852	.1476	.5101
420305	68.9300	70.6112	72.2925	73.9737	75.6549	77.3361	79.0173	80.6986	84.0610	87.4234	90.7859	94.1483	97.5108
308	.9305	.6117	.2930	.9742	.6554	.3367	.0179	.6991	.0616	.4241	.7865	.1490	.5115
311	.9310	.6122	.2935	.9747	.6560	.3372	.0185	.6997	.0622	.4247	.7872	.1497	.5122
314	.9315	.6128	.2940	.9753	.6565	.3378	.0190	.7003	.0628	.4253	.7878	.1503	.5128
317	.9320	.6133	.2945	.9758	.6571	.3383	.0196	.7009	.0634	.4259	.7885	.1510	.5135
420320	68.9325	70.6138	72.2950	73.9763	75.6576	77.3389	79.0202	80.7014	84.0640	87.4266	90.7891	94.1517	97.5142
323	.9330	.6143	.2956	.9768	.6581	.3394	.0207	.7020	.0646	.4272	.7898	.1524	.5149
326	.9335	.6148	.2961	.9774	.6587	.3400	.0213	.7026	.0652	.4278	.7904	.1530	.5156
329	.9340	.6153	.2966	.9779	.6592	.3405	.0219	.7032	.0658	.4284	.7911	.1537	.5163
332	.9344	.6158	.2971	.9784	.6598	.3411	.0224	.7037	.0664	.4291	.7917	.1544	.5170
420335	68.9349	70.6163	72.2976	73.9790	75.6603	77.3416	79.0230	80.7043	84.0670	87.4297	90.7924	94.1550	97.5177
338	.9354	.6168	.2981	.9795	.6608	.3422	.0235	.7049	.0676	.4303	.7930	.1557	.5184
341	.9359	.6173	.2987	.9800	.6614	.3427	.0241	.7055	.0682	.4309	.7937	.1564	.5191
344	.9364	.6178	.2992	.9805	.6619	.3433	.0247	.7060	.0688	.4316	.7943	.1571	.5198
347	.9369	.6183	.2997	.9811	.6625	.3438	.0252	.7066	.0694	.4322	.7950	.1577	.5205
420350	68.9374	70.6188	72.3002	73.9816	75.6630	77.3444	79.0258	80.7072	84.0700	87.4328	90.7956	94.1584	97.5212
353	.9379	.6193	.3007	.9821	.6635	.3450	.0264	.7078	.0706	.4334	.7962	.1591	.5219
356	.9384	.6198	.3012	.9827	.6641	.3455	.0269	.7084	.0712	.4340	.7969	.1597	.5226
359	.9389	.6203	.3017	.9832	.6646	.3461	.0275	.7089	.0718	.4347	.7975	.1604	.5233
362	.9394	.6208	.3023	.9837	.6652	.3466	.0281	.7095	.0724	.4353	.7982	.1611	.5240
420365	68.9399	70.6213	72.3028	73.9842	75.6657	77.3472	79.0286	80.7101	84.0730	87.4359	90.7988	94.1618	97.5247
368	.9404	.6218	.3033	.9848	.6662	.3477	.0292	.7107	.0736	.4365	.7995	.1624	.5254
371	.9408	.6223	.3038	.9853	.6668	.3483	.0297	.7112	.0742	.4372	.8001	.1631	.5261
374	.9413	.6228	.3043	.9858	.6673	.3488	.0303	.7118	.0748	.4378	.8008	.1638	.5268
377	.9418	.6233	.3048	.9864	.6679	.3494	.0309	.7124	.0754	.4384	.8014	.1644	.5275
420380	68.9423	70.6238	72.3054	73.9869	75.6684	77.3499	79.0314	80.7130	84.0760	87.4390	90.8021	94.1651	97.5282
383	.9428	.6243	.3059	.9874	.6689	.3505	.0320	.7135	.0766	.4397	.8027	.1658	.5289
386	.9433	.6248	.3064	.9879	.6695	.3510	.0326	.7141	.0772	.4403	.8034	.1665	.5296
389	.9438	.6254	.3069	.9885	.6700	.3516	.0331	.7147	.0778	.4409	.8040	.1671	.5302
392	.9443	.6259	.3074	.9890	.6706	.3521	.0337	.7153	.0784	.4415	.8047	.1678	.5309
420395	68.9448	70.6264	72.3079	73.9895	75.6711	77.3527	79.0343	80.7158	84.0790	87.4422	90.8053	94.1685	97.5316
398	.9453	.6269	.3085	.9900	.6716	.3532	.0348	.7164	.0796	.4428	.8060	.1692	.5323
401	.9458	.6274	.3090	.9906	.6722	.3538	.0354	.7170	.0802	.4434	.8066	.1698	.5330
404	.9463	.6279	.3095	.9911	.6727	.3543	.0360	.7176	.0808	.4440	.8073	.1705	.5337
407	.9467	.6284	.3100	.9916	.6733	.3549	.0365	.7181	.0814	.4447	.8079	.1712	.5344
420410	68.9472	70.6289	72.3105	73.9922	75.6738	77.3554	79.0371	80.7187	84.0820	87.4453	90.8086	94.1718	97.5351
413	.9477	.6294	.3110	.9927	.6743	.3560	.0376	.7193	.0826	.4459	.8092	.1725	.5358
416	.9482	.6299	.3116	.9932	.6749	.3565	.0382	.7199	.0832	.4465	.8099	.1732	.5365
419	.9487	.6304	.3121	.9937	.6754	.3571	.0388	.7204	.0838	.4472	.8105	.1739	.5372
422	.9492	.6309	.3126	.9943	.6760	.3576	.0393	.7210	.0844	.4478	.8112	.1745	.5379
420425	68.9497	70.6314	72.3131	73.9948	75.6765	77.3582	79.0399	80.7216	84.0850	87.4484	90.8118	94.1752	97.5386
428	.9502	.6319	.3136	.9953	.6770	.3588	.0405	.7222	.0856	.4490	.8124	.1759	.5393
431	.9507	.6324	.3141	.9959	.6776	.3593	.0410	.7228	.0862	.4496	.8131	.1765	.5400
434	.9512	.6329	.3146	.9964	.6781	.3599	.0416	.7233	.0868	.4503	.8137	.1772	.5407
437	.9517	.6334	.3152	.9969	.6787	.3604	.0422	.7239	.0874	.4509	.8144	.1779	.5414
420440	68.9522	70.6339	72.3157	73.9974	75.6792	77.3610	79.0427	80.7245	84.0880	87.4515	90.8150	94.1786	97.5421
443	.9527	.6344	.3162	.9980	.6797	.3615	.0433	.7251	.0886	.4521	.8157	.1792	.5428
446	.9531	.6349	.3167	.9985	.6803	.3621	.0438	.7256	.0892	.4528	.8163	.1799	.5435
449	.9536	.6354	.3172	.9990	.6808	.3626	.0444	.7262	.0898	.4534	.8170	.1806	.5442
452	.9541	.6359	.3177	.9996	.6814	.3632	.0450	.7268	.0904	.4540	.8176	.1812	.5449
420455	68.9546	70.6364	72.3183	74.0001	75.6819	77.3637	79.0455	80.7274	84.0910	87.4546	90.8183	94.1819	97.5456
458	.9551	.6369	.3188	.0006	.6824	.3643	.0461	.7279	.0916	.4553	.8189	.1826	.5463
461	.9556	.6374	.3193	.0011	.6830	.3648	.0467	.7285	.0922	.4559	.8196	.1833	.5470
464	.9561	.6380	.3198	.0017	.6835	.3654	.0472	.7291	.0928	.4565	.8202	.1839	.5476
467	.9566	.6385	.3203	.0022	.6841	.3659	.0478	.7297	.0934	.4571	.8209	.1846	.5483
420470	68.9571	70.6390	72.3208	74.0027	75.6846	77.3665	79.0484	80.7302	84.0940	87.4578	90.8215	94.1853	97.5490
473	.9576	.6395	.3214	.0032	.6851	.3670	.0489	.7308	.0946	.4584	.8222	.1860	.5497
476	.9581	.6400	.3219	.0038	.6857	.3676	.0495	.7314	.0952	.4590	.8228	.1866	.5504
479	.9586	.6405	.3224	.0043	.6862	.3681	.0501	.7320	.0958	.4596	.8235	.1873	.5511
482	.9590	.6410	.3229	.0048	.6868	.3687	.0506	.7325	.0964	.4603	.8241	.1880	.5518
420485	68.9595	70.6415	72.3234	74.0054	75.6873	77.3692	79.0512	80.7331	84.0970	87.4609	90.8248	94.1886	97.5525
488	.9600	.6420	.3239	.0059	.6878	.3698	.0517	.7337	.0976	.4615	.8254	.1893	.5532
491	.9605	.6425	.3245	.0064	.6884	.3703	.0523	.7343	.0982	.4621	.8261	.1900	.5539
494	.9610	.6430	.3250	.0069	.6889	.3709	.0529	.7348	.0988	.4628	.8267	.1907	.5546
497	.9615	.6435	.3255	.0075	.6895	.3714	.0534	.7354	.0994	.4634	.8274	.1913	.5553
420500	68.9620	70.6440	72.3260	74.0080	75.6900	77.3720	79.0540	80.7360	84.1000	87.4640	90.8280	94.1920	97.5560

MEGACYCLES PER SECOND

HARMONICS

BASIC FREQ.	112	116	120	124	128	132	136	140	144	148	152	156	160
420500	47.0960	48.7780	50.4600	52.1420	53.8240	55.5060	57.1880	58.8700	60.5520	62.2340	63.9160	65.5980	67.2800
503	.0963	.7783	.4604	.1424	.8244	.5064	.1884	.8704	.5524	.2344	.9165	.5985	.2805
506	.0967	.7787	.4607	.1427	.8248	.5068	.1888	.8708	.5529	.2349	.9169	.5989	.2810
509	.0970	.7790	.4611	.1431	.8252	.5072	.1892	.8713	.5533	.2353	.9174	.5994	.2814
512	.0973	.7794	.4614	.1435	.8255	.5076	.1896	.8717	.5537	.2358	.9178	.5999	.2819
420515	47.0977	48.7797	50.4618	52.1439	53.8259	55.5080	57.1900	58.8721	60.5542	62.2362	63.9183	65.6003	67.2824
518	.0980	.7801	.4622	.1442	.8263	.5084	.1904	.8725	.5546	.2367	.9187	.6008	.2829
521	.0984	.7804	.4625	.1446	.8267	.5088	.1909	.8729	.5550	.2371	.9192	.6013	.2834
524	.0987	.7808	.4629	.1450	.8271	.5092	.1913	.8734	.5555	.2376	.9196	.6017	.2838
527	.0990	.7811	.4632	.1453	.8275	.5096	.1917	.8738	.5559	.2380	.9201	.6022	.2843
420530	47.0994	48.7815	50.4636	52.1457	53.8278	55.5100	57.1921	58.8742	60.5563	62.2384	63.9206	65.6027	67.2848
533	.0997	.7818	.4640	.1461	.8282	.5104	.1925	.8746	.5568	.2389	.9210	.6031	.2853
536	.1000	.7822	.4643	.1465	.8286	.5108	.1929	.8750	.5572	.2393	.9215	.6036	.2858
539	.1004	.7825	.4647	.1468	.8290	.5111	.1933	.8755	.5576	.2398	.9219	.6041	.2862
542	.1007	.7829	.4650	.1472	.8294	.5115	.1937	.8759	.5580	.2402	.9224	.6046	.2867
420545	47.1010	48.7832	50.4654	52.1476	53.8298	55.5119	57.1941	58.8763	60.5585	62.2407	63.9228	65.6050	67.2872
548	.1014	.7836	.4658	.1480	.8301	.5123	.1945	.8767	.5589	.2411	.9233	.6055	.2877
551	.1017	.7839	.4661	.1483	.8305	.5127	.1949	.8771	.5593	.2415	.9238	.6060	.2882
554	.1020	.7843	.4665	.1487	.8309	.5131	.1953	.8776	.5598	.2420	.9242	.6064	.2886
557	.1024	.7846	.4668	.1491	.8313	.5135	.1958	.8780	.5602	.2424	.9247	.6069	.2891
420560	47.1027	48.7850	50.4672	52.1494	53.8317	55.5139	57.1962	58.8784	60.5606	62.2429	63.9251	65.6074	67.2896
563	.1031	.7853	.4676	.1498	.8321	.5143	.1966	.8788	.5611	.2433	.9256	.6078	.2901
566	.1034	.7857	.4679	.1502	.8324	.5147	.1970	.8792	.5615	.2438	.9260	.6083	.2906
569	.1037	.7860	.4683	.1506	.8328	.5151	.1974	.8797	.5619	.2442	.9265	.6088	.2910
572	.1041	.7864	.4686	.1509	.8332	.5155	.1978	.8801	.5624	.2447	.9269	.6092	.2915
420575	47.1044	48.7867	50.4690	52.1513	53.8336	55.5159	57.1982	58.8805	60.5628	62.2451	63.9274	65.6097	67.2920
578	.1047	.7870	.4694	.1517	.8340	.5163	.1986	.8809	.5632	.2455	.9279	.6102	.2925
581	.1051	.7874	.4697	.1520	.8344	.5167	.1990	.8813	.5637	.2460	.9283	.6106	.2930
584	.1054	.7877	.4701	.1524	.8348	.5171	.1994	.8818	.5641	.2464	.9288	.6111	.2934
587	.1057	.7881	.4704	.1528	.8351	.5175	.1998	.8822	.5645	.2469	.9292	.6116	.2939
420590	47.1061	48.7884	50.4708	52.1532	53.8355	55.5179	57.2002	58.8826	60.5650	62.2473	63.9297	65.6120	67.2944
593	.1064	.7888	.4712	.1535	.8359	.5183	.2006	.8830	.5654	.2478	.9301	.6125	.2949
596	.1068	.7891	.4715	.1539	.8363	.5187	.2011	.8834	.5658	.2482	.9306	.6130	.2954
599	.1071	.7895	.4719	.1543	.8367	.5191	.2015	.8839	.5663	.2487	.9310	.6134	.2958
602	.1074	.7898	.4722	.1546	.8371	.5195	.2019	.8843	.5667	.2491	.9315	.6139	.2963
420605	47.1078	48.7902	50.4726	52.1550	53.8374	55.5199	57.2023	58.8847	60.5671	62.2495	63.9320	65.6144	67.2968
608	.1081	.7905	.4730	.1554	.8378	.5203	.2027	.8851	.5676	.2500	.9324	.6148	.2973
611	.1084	.7909	.4733	.1558	.8382	.5207	.2031	.8855	.5680	.2504	.9329	.6153	.2978
614	.1088	.7912	.4737	.1561	.8386	.5210	.2035	.8860	.5684	.2509	.9333	.6158	.2982
617	.1091	.7916	.4740	.1565	.8390	.5214	.2039	.8864	.5688	.2513	.9338	.6163	.2987
420620	47.1094	48.7919	50.4744	52.1569	53.8394	55.5218	57.2043	58.8868	60.5693	62.2518	63.9342	65.6167	67.2992
623	.1098	.7923	.4748	.1573	.8397	.5222	.2047	.8872	.5697	.2522	.9347	.6172	.2997
626	.1101	.7926	.4751	.1576	.8401	.5226	.2051	.8876	.5701	.2526	.9352	.6177	.3002
629	.1104	.7930	.4755	.1580	.8405	.5230	.2055	.8881	.5706	.2531	.9356	.6181	.3006
632	.1108	.7933	.4758	.1584	.8409	.5234	.2060	.8885	.5710	.2535	.9361	.6186	.3011
420635	47.1111	48.7937	50.4762	52.1587	53.8413	55.5238	57.2064	58.8889	60.5714	62.2540	63.9365	65.6191	67.3016
638	.1115	.7940	.4766	.1591	.8417	.5242	.2068	.8893	.5719	.2544	.9370	.6195	.3021
641	.1118	.7944	.4769	.1595	.8420	.5246	.2072	.8897	.5723	.2549	.9374	.6200	.3026
644	.1121	.7947	.4773	.1599	.8424	.5250	.2076	.8902	.5727	.2553	.9379	.6205	.3030
647	.1125	.7951	.4776	.1602	.8428	.5254	.2080	.8906	.5732	.2558	.9383	.6209	.3035
420650	47.1128	48.7954	50.4780	52.1606	53.8432	55.5258	57.2084	58.8910	60.5736	62.2562	63.9388	65.6214	67.3040
653	.1131	.7957	.4784	.1610	.8436	.5262	.2088	.8914	.5740	.2566	.9393	.6219	.3045
656	.1135	.7961	.4787	.1613	.8440	.5266	.2092	.8918	.5745	.2571	.9397	.6223	.3050
659	.1138	.7964	.4791	.1617	.8444	.5270	.2096	.8923	.5749	.2575	.9402	.6228	.3054
662	.1141	.7968	.4794	.1621	.8447	.5274	.2100	.8927	.5753	.2580	.9406	.6233	.3059
420665	47.1145	48.7971	50.4798	52.1625	53.8451	55.5278	57.2104	58.8931	60.5758	62.2584	63.9411	65.6237	67.3064
668	.1148	.7975	.4802	.1628	.8455	.5282	.2108	.8935	.5762	.2589	.9415	.6242	.3069
671	.1152	.7978	.4805	.1632	.8459	.5286	.2113	.8939	.5766	.2593	.9420	.6247	.3074
674	.1155	.7982	.4809	.1636	.8463	.5290	.2117	.8944	.5771	.2598	.9424	.6251	.3078
677	.1158	.7985	.4812	.1639	.8467	.5294	.2121	.8948	.5775	.2602	.9429	.6256	.3083
420680	47.1162	48.7989	50.4816	52.1643	53.8470	55.5298	57.2125	58.8952	60.5779	62.2606	63.9434	65.6261	67.3088
683	.1165	.7992	.4820	.1647	.8474	.5302	.2129	.8956	.5784	.2611	.9438	.6265	.3093
686	.1168	.7996	.4823	.1651	.8478	.5306	.2133	.8960	.5788	.2615	.9443	.6270	.3098
689	.1172	.7999	.4827	.1654	.8482	.5309	.2137	.8965	.5792	.2620	.9447	.6275	.3102
692	.1175	.8003	.4830	.1658	.8486	.5313	.2141	.8969	.5796	.2624	.9452	.6280	.3107
420695	47.1178	48.8006	50.4834	52.1662	53.8490	55.5317	57.2145	58.8973	60.5801	62.2629	63.9456	65.6284	67.3112
698	.1182	.8010	.4838	.1666	.8493	.5321	.2149	.8977	.5805	.2633	.9461	.6289	.3117
701	.1185	.8013	.4841	.1669	.8497	.5325	.2153	.8981	.5809	.2637	.9466	.6294	.3122
704	.1188	.8017	.4845	.1673	.8501	.5329	.2157	.8986	.5814	.2642	.9470	.6298	.3126
707	.1192	.8020	.4848	.1677	.8505	.5333	.2162	.8990	.5818	.2646	.9475	.6303	.3131
420710	47.1195	48.8024	50.4852	52.1680	53.8509	55.5337	57.2166	58.8994	60.5822	62.2651	63.9479	65.6308	67.3136
713	.1199	.8027	.4856	.1684	.8513	.5341	.2170	.8998	.5827	.2655	.9484	.6312	.3141
716	.1202	.8031	.4859	.1688	.8516	.5345	.2174	.9002	.5831	.2660	.9488	.6317	.3146
719	.1205	.8034	.4863	.1692	.8520	.5349	.2178	.9007	.5835	.2664	.9493	.6322	.3150
722	.1209	.8038	.4866	.1695	.8524	.5353	.2182	.9011	.5840	.2669	.9497	.6326	.3155
420725	47.1212	48.8041	50.4870	52.1699	53.8528	55.5357	57.2186	58.9015	60.5844	62.2673	63.9502	65.6331	67.3160
728	.1215	.8044	.4874	.1703	.8532	.5361	.2190	.9019	.5848	.2677	.9507	.6336	.3165
731	.1219	.8048	.4877	.1706	.8536	.5365	.2194	.9023	.5853	.2682	.9511	.6340	.3170
734	.1222	.8051	.4881	.1710	.8540	.5369	.2198	.9028	.5857	.2686	.9516	.6345	.3174
737	.1225	.8055	.4884	.1714	.8543	.5373	.2202	.9032	.5861	.2691	.9520	.6350	.3179
420740	47.1229	48.8058	50.4888	52.1718	53.8547	55.5377	57.2206	58.9036	60.5866	62.2695	63.9525	65.6354	67.3184
743	.1232	.8062	.4892	.1721	.8551	.5381	.2210	.9040	.5870	.2700	.9529	.6359	.3189
746	.1236	.8065	.4895	.1725	.8555	.5385	.2215	.9044	.5874	.2704	.9534	.6364	.3194
749	.1239	.8069	.4899	.1729	.8559	.5389	.2219	.9049	.5879	.2709	.9538	.6368	.3198
752	.1242	.8072	.4902	.1732	.8563	.5393	.2223	.9053	.5883	.2713	.9543	.6373	.3203
420755	47.1246	48.8076	50.4906	52.1736	53.8566	55.5397	57.2227	58.9057	60.5887	62.2717	63.9548	65.6378	67.3208
758	.1249	.8079	.4910	.1740	.8570	.5401	.2231	.9061	.5892	.2722	.9552	.6382	.3213
761	.1252	.8083	.4913	.1744	.8574	.5405	.2235	.9065	.5896	.2726	.9557	.6387	.3218
764	.1256	.8086	.4917	.1747	.8578	.5408	.2239	.9070	.5900	.2731	.9561	.6392	.3222
767	.1259	.8090	.4920	.1751	.8582	.5412	.2243	.9074	.5904	.2735	.9566	.6397	.3227
420770	47.1262	48.8093	50.4924	52.1755	53.8586	55.5416	57.2247	58.9078	60.5909	62.2740	63.9570	65.6401	67.3232
773	.1266	.8097	.4928	.1759	.8589	.5420	.2251	.9082	.5913	.2744	.9575	.6406	.3237
776	.1269	.8100	.4931	.1762	.8593	.5424	.2255	.9086	.5917	.2748	.9580	.6411	.3242
779	.1272	.8104	.4935	.1766	.8597	.5428	.2259	.9091	.5922	.2753	.9584	.6415	.3246
782	.1276	.8107	.4938	.1770	.8601	.5432	.2264	.9095	.5926	.2757	.9589	.6420	.3251
420785	47.1279	48.8111	50.4942	52.1773	53.8605	55.5436	57.2268	58.9099	60.5930	62.2762	63.9593	65.6425	67.3256
788	.1283	.8114	.4946	.1777	.8609	.5440	.2272	.9103	.5935	.2766	.9598	.6429	.3261
791	.1286	.8118	.4949	.1781	.8612	.5444	.2276	.9107	.5939	.2771	.9602	.6434	.3266
794	.1289	.8121	.4953	.1785	.8616	.5448	.2280	.9112	.5943	.2775	.9607	.6439	.3270
797	.1293	.8125	.4956	.1788	.8620	.5452	.2284	.9116	.5948	.2780	.9611	.6443	.3275
420800	47.1296	48.8128	50.4960	52.1792	53.8624	55.5456	57.2288	58.9120	60.5952	62.2784	63.9616	65.6448	67.3280

MEGACYCLES PER SECOND

HARMONICS

BASIC FREQ.	164	168	172	176	180	184	188	192	200	208	216	224	232
420500	68.9620	70.6440	72.3260	74.0080	75.6900	77.3720	79.0540	80.7360	84.1000	87.4640	90.8280	94.1920	97.5560
503	.9625	.6445	.3265	.0085	.6905	.3726	.0546	.7366	.1006	.4646	.8286	.1927	.5567
506	.9630	.6450	.3270	.0091	.6911	.3731	.0551	.7372	.1012	.4652	.8293	.1933	.5574
509	.9635	.6455	.3275	.0096	.6916	.3737	.0557	.7377	.1018	.4659	.8299	.1940	.5581
512	.9640	.6460	.3281	.0101	.6922	.3742	.0563	.7383	.1024	.4665	.8306	.1947	.5588
420515	68.9645	70.6465	72.3286	74.0106	75.6927	77.3748	79.0568	80.7389	84.1030	87.4671	90.8312	94.1954	97.5595
518	.9650	.6470	.3291	.0112	.6932	.3753	.0574	.7395	.1036	.4677	.8319	.1960	.5602
521	.9654	.6475	.3296	.0117	.6938	.3759	.0579	.7400	.1042	.4684	.8325	.1967	.5609
524	.9659	.6480	.3301	.0122	.6943	.3764	.0585	.7406	.1048	.4690	.8332	.1974	.5616
527	.9664	.6485	.3306	.0128	.6949	.3770	.0591	.7412	.1054	.4696	.8338	.1980	.5623
420530	68.9669	70.6490	72.3312	74.0133	75.6954	77.3775	79.0596	80.7418	84.1060	87.4702	90.8345	94.1987	97.5630
533	.9674	.6495	.3317	.0138	.6959	.3781	.0602	.7423	.1066	.4709	.8351	.1994	.5637
536	.9679	.6500	.3322	.0143	.6965	.3786	.0608	.7429	.1072	.4715	.8358	.2001	.5644
539	.9684	.6506	.3327	.0149	.6970	.3792	.0613	.7435	.1078	.4721	.8364	.2007	.5650
542	.9689	.6511	.3332	.0154	.6976	.3797	.0619	.7441	.1084	.4727	.8371	.2014	.5657
420545	68.9694	70.6516	72.3337	74.0159	75.6981	77.3803	79.0625	80.7446	84.1090	87.4734	90.8377	94.2021	97.5664
548	.9699	.6521	.3343	.0164	.6986	.3808	.0630	.7452	.1096	.4740	.8384	.2028	.5671
551	.9704	.6526	.3348	.0170	.6992	.3814	.0636	.7458	.1102	.4746	.8390	.2034	.5678
554	.9709	.6531	.3353	.0175	.6997	.3819	.0642	.7464	.1108	.4752	.8397	.2041	.5685
557	.9713	.6536	.3358	.0180	.7003	.3825	.0647	.7469	.1114	.4759	.8403	.2048	.5692
420560	68.9718	70.6541	72.3363	74.0186	75.7008	77.3830	79.0653	80.7475	84.1120	87.4765	90.8410	94.2054	97.5699
563	.9723	.6546	.3368	.0191	.7013	.3836	.0658	.7481	.1126	.4771	.8416	.2061	.5706
566	.9728	.6551	.3374	.0196	.7019	.3841	.0664	.7487	.1132	.4777	.8423	.2068	.5713
569	.9733	.6556	.3379	.0201	.7024	.3847	.0670	.7492	.1138	.4784	.8429	.2075	.5720
572	.9738	.6561	.3384	.0207	.7030	.3852	.0675	.7498	.1144	.4790	.8436	.2081	.5727
420575	68.9743	70.6566	72.3389	74.0212	75.7035	77.3858	79.0681	80.7504	84.1150	87.4796	90.8442	94.2088	97.5734
578	.9748	.6571	.3394	.0217	.7040	.3864	.0687	.7510	.1156	.4802	.8448	.2095	.5741
581	.9753	.6576	.3399	.0223	.7046	.3869	.0692	.7516	.1162	.4808	.8455	.2101	.5748
584	.9758	.6581	.3404	.0228	.7051	.3875	.0698	.7521	.1168	.4815	.8461	.2108	.5755
587	.9763	.6586	.3410	.0233	.7057	.3880	.0704	.7527	.1174	.4821	.8468	.2115	.5762
420590	68.9768	70.6591	72.3415	74.0238	75.7062	77.3886	79.0709	80.7533	84.1180	87.4827	90.8474	94.2122	97.5769
593	.9773	.6596	.3420	.0244	.7067	.3891	.0715	.7539	.1186	.4833	.8481	.2128	.5776
596	.9777	.6601	.3425	.0249	.7073	.3897	.0720	.7544	.1192	.4840	.8487	.2135	.5783
599	.9782	.6606	.3430	.0254	.7078	.3902	.0726	.7550	.1198	.4846	.8494	.2142	.5790
602	.9787	.6611	.3435	.0260	.7084	.3908	.0732	.7556	.1204	.4852	.8500	.2148	.5797
420605	68.9792	70.6616	72.3441	74.0265	75.7089	77.3913	79.0737	80.7562	84.1210	87.4858	90.8507	94.2155	97.5804
608	.9797	.6621	.3446	.0270	.7094	.3919	.0743	.7567	.1216	.4865	.8513	.2162	.5811
611	.9802	.6626	.3451	.0275	.7100	.3924	.0749	.7573	.1222	.4871	.8520	.2169	.5818
614	.9807	.6632	.3456	.0281	.7105	.3930	.0754	.7579	.1228	.4877	.8526	.2175	.5824
617	.9812	.6637	.3461	.0286	.7111	.3935	.0760	.7585	.1234	.4883	.8533	.2182	.5831
420620	68.9817	70.6642	72.3466	74.0291	75.7116	77.3941	79.0766	80.7590	84.1240	87.4890	90.8539	94.2189	97.5838
623	.9822	.6647	.3472	.0296	.7121	.3946	.0771	.7596	.1246	.4896	.8546	.2196	.5845
626	.9827	.6652	.3477	.0302	.7127	.3952	.0777	.7602	.1252	.4902	.8552	.2202	.5852
629	.9832	.6657	.3482	.0307	.7132	.3957	.0783	.7608	.1258	.4908	.8559	.2209	.5859
632	.9836	.6662	.3487	.0312	.7138	.3963	.0788	.7613	.1264	.4915	.8565	.2216	.5866
420635	68.9841	70.6667	72.3492	74.0318	75.7143	77.3968	79.0794	80.7619	84.1270	87.4921	90.8572	94.2222	97.5873
638	.9846	.6672	.3497	.0323	.7148	.3974	.0799	.7625	.1276	.4927	.8578	.2229	.5880
641	.9851	.6677	.3503	.0328	.7154	.3979	.0805	.7631	.1282	.4933	.8585	.2236	.5887
644	.9856	.6682	.3508	.0333	.7159	.3985	.0811	.7636	.1288	.4940	.8591	.2243	.5894
647	.9861	.6687	.3513	.0339	.7165	.3990	.0816	.7642	.1294	.4946	.8598	.2249	.5901
420650	68.9866	70.6692	72.3518	74.0344	75.7170	77.3996	79.0822	80.7648	84.1300	87.4952	90.8604	94.2256	97.5908
653	.9871	.6697	.3523	.0349	.7175	.4002	.0828	.7654	.1306	.4958	.8610	.2263	.5915
656	.9876	.6702	.3528	.0355	.7181	.4007	.0833	.7660	.1312	.4964	.8617	.2269	.5922
659	.9881	.6707	.3533	.0360	.7186	.4013	.0839	.7665	.1318	.4971	.8623	.2276	.5929
662	.9886	.6712	.3539	.0365	.7192	.4018	.0845	.7671	.1324	.4977	.8630	.2283	.5936
420665	68.9891	70.6717	72.3544	74.0370	75.7197	77.4024	79.0850	80.7677	84.1330	87.4983	90.8636	94.2290	97.5943
668	.9896	.6722	.3549	.0376	.7202	.4029	.0856	.7683	.1336	.4989	.8643	.2296	.5950
671	.9900	.6727	.3554	.0381	.7208	.4035	.0861	.7688	.1342	.4996	.8649	.2303	.5957
674	.9905	.6732	.3559	.0386	.7213	.4040	.0867	.7694	.1348	.5002	.8656	.2310	.5964
677	.9910	.6737	.3564	.0392	.7219	.4046	.0873	.7700	.1354	.5008	.8662	.2316	.5971
420680	68.9915	70.6742	72.3570	74.0397	75.7224	77.4051	79.0878	80.7706	84.1360	87.5014	90.8669	94.2323	97.5978
683	.9920	.6747	.3575	.0402	.7229	.4057	.0884	.7711	.1366	.5021	.8675	.2330	.5985
686	.9925	.6752	.3580	.0407	.7235	.4062	.0890	.7717	.1372	.5027	.8682	.2337	.5992
689	.9930	.6758	.3585	.0413	.7240	.4068	.0895	.7723	.1378	.5033	.8688	.2343	.5998
692	.9935	.6763	.3590	.0418	.7246	.4073	.0901	.7729	.1384	.5039	.8695	.2350	.6005
420695	68.9940	70.6768	72.3595	74.0423	75.7251	77.4079	79.0907	80.7734	84.1390	87.5046	90.8701	94.2357	97.6012
698	.9945	.6773	.3601	.0428	.7256	.4084	.0912	.7740	.1396	.5052	.8708	.2364	.6019
701	.9950	.6778	.3606	.0434	.7262	.4090	.0918	.7746	.1402	.5058	.8714	.2370	.6026
704	.9955	.6783	.3611	.0439	.7267	.4095	.0924	.7752	.1408	.5064	.8721	.2377	.6033
707	.9959	.6788	.3616	.0444	.7273	.4101	.0929	.7757	.1414	.5071	.8727	.2384	.6040
420710	68.9964	70.6793	72.3621	74.0450	75.7278	77.4106	79.0935	80.7763	84.1420	87.5077	90.8734	94.2390	97.6047
713	.9969	.6798	.3626	.0455	.7283	.4112	.0940	.7769	.1426	.5083	.8740	.2397	.6054
716	.9974	.6803	.3632	.0460	.7289	.4117	.0946	.7775	.1432	.5089	.8747	.2404	.6061
719	.9979	.6808	.3637	.0465	.7294	.4123	.0952	.7780	.1438	.5096	.8753	.2411	.6068
722	.9984	.6813	.3642	.0471	.7300	.4128	.0957	.7786	.1444	.5102	.8760	.2417	.6075
420725	68.9989	70.6818	72.3647	74.0476	75.7305	77.4134	79.0963	80.7792	84.1450	87.5108	90.8766	94.2424	97.6082
728	.9994	.6823	.3652	.0481	.7310	.4140	.0969	.7798	.1456	.5114	.8772	.2431	.6089
731	.9999	.6828	.3657	.0487	.7316	.4145	.0974	.7804	.1462	.5120	.8779	.2437	.6096
734	69.0004	.6833	.3662	.0492	.7321	.4151	.0980	.7809	.1468	.5127	.8785	.2444	.6103
737	.0009	.6838	.3668	.0497	.7327	.4156	.0986	.7815	.1474	.5133	.8792	.2451	.6110
420740	69.0014	70.6843	72.3673	74.0502	75.7332	77.4162	79.0991	80.7821	84.1480	87.5139	90.8798	94.2458	97.6117
743	.0019	.6848	.3678	.0508	.7337	.4167	.0997	.7827	.1486	.5145	.8805	.2464	.6124
746	.0023	.6853	.3683	.0513	.7343	.4173	.1002	.7832	.1492	.5152	.8811	.2471	.6131
749	.0028	.6858	.3688	.0518	.7348	.4178	.1008	.7838	.1498	.5158	.8818	.2478	.6138
752	.0033	.6863	.3693	.0524	.7354	.4184	.1014	.7844	.1504	.5164	.8824	.2484	.6145
420755	69.0038	70.6868	72.3699	74.0529	75.7359	77.4189	79.1019	80.7850	84.1510	87.5170	90.8831	94.2491	97.6152
758	.0043	.6873	.3704	.0534	.7364	.4195	.1025	.7855	.1516	.5177	.8837	.2498	.6159
761	.0048	.6878	.3709	.0539	.7370	.4200	.1031	.7861	.1522	.5183	.8844	.2505	.6166
764	.0053	.6884	.3714	.0545	.7375	.4206	.1036	.7867	.1528	.5189	.8850	.2511	.6172
767	.0058	.6889	.3719	.0550	.7381	.4211	.1042	.7873	.1534	.5195	.8857	.2518	.6179
420770	69.0063	70.6894	72.3724	74.0555	75.7386	77.4217	79.1048	80.7878	84.1540	87.5202	90.8863	94.2525	97.6186
773	.0068	.6899	.3730	.0560	.7391	.4222	.1053	.7884	.1546	.5208	.8870	.2532	.6193
776	.0073	.6904	.3735	.0566	.7397	.4228	.1059	.7890	.1552	.5214	.8876	.2538	.6200
779	.0078	.6909	.3740	.0571	.7402	.4233	.1065	.7896	.1558	.5220	.8883	.2545	.6207
782	.0082	.6914	.3745	.0576	.7408	.4239	.1070	.7901	.1564	.5227	.8889	.2552	.6214
420785	69.0087	70.6919	72.3750	74.0582	75.7413	77.4244	79.1076	80.7907	84.1570	87.5233	90.8896	94.2558	97.6221
788	.0092	.6924	.3755	.0587	.7418	.4250	.1081	.7913	.1576	.5239	.8902	.2565	.6228
791	.0097	.6929	.3761	.0592	.7424	.4255	.1087	.7919	.1582	.5245	.8909	.2572	.6235
794	.0102	.6934	.3766	.0597	.7429	.4261	.1093	.7924	.1588	.5252	.8915	.2579	.6242
797	.0107	.6939	.3771	.0603	.7435	.4266	.1098	.7930	.1594	.5258	.8922	.2585	.6249
420800	69.0112	70.6944	72.3776	74.0608	75.7440	77.4272	79.1104	80.7936	84.1600	87.5264	90.8928	94.2592	97.6256

MEGACYCLES PER SECOND

H A R M O N I C S

BASIC FREQ.	112	116	120	124	128	132	136	140	144	148	152	156	160
420800	47.1296	48.8128	50.4960	52.1792	53.8624	55.5456	57.2288	58.9120	60.5952	62.2784	63.9616	65.6448	67.3280
803	.1299	.8131	.4964	.1796	.8628	.5460	.2292	.9124	.5956	.2788	.9621	.6453	.3285
806	.1303	.8135	.4967	.1799	.8632	.5464	.2296	.9128	.5961	.2793	.9625	.6457	.3290
809	.1306	.8138	.4971	.1803	.8636	.5468	.2300	.9133	.5965	.2797	.9630	.6462	.3294
812	.1309	.8142	.4974	.1807	.8639	.5472	.2304	.9137	.5969	.2802	.9634	.6467	.3299
420815	47.1313	48.8145	50.4978	52.1811	53.8643	55.5476	57.2308	58.9141	60.5974	62.2806	63.9639	65.6471	67.3304
818	.1316	.8149	.4982	.1814	.8647	.5480	.2312	.9145	.5978	.2811	.9643	.6476	.3309
821	.1320	.8152	.4985	.1818	.8651	.5484	.2317	.9149	.5982	.2815	.9648	.6481	.3314
824	.1323	.8156	.4989	.1822	.8655	.5488	.2321	.9154	.5987	.2820	.9652	.6485	.3318
827	.1326	.8159	.4992	.1825	.8659	.5492	.2325	.9158	.5991	.2824	.9657	.6490	.3323
420830	47.1330	48.8163	50.4996	52.1829	53.8662	55.5496	57.2329	58.9162	60.5995	62.2828	63.9662	65.6495	67.3328
833	.1333	.8166	.5000	.1833	.8666	.5500	.2333	.9166	.6000	.2833	.9666	.6499	.3333
836	.1336	.8170	.5003	.1837	.8670	.5504	.2337	.9170	.6004	.2837	.9671	.6504	.3338
839	.1340	.8173	.5007	.1840	.8674	.5507	.2341	.9175	.6008	.2842	.9675	.6509	.3342
842	.1343	.8177	.5010	.1844	.8678	.5511	.2345	.9179	.6012	.2846	.9680	.6514	.3347
420845	47.1346	48.8180	50.5014	52.1848	53.8682	55.5515	57.2349	58.9183	60.6017	62.2851	63.9684	65.6518	67.3352
848	.1350	.8184	.5018	.1852	.8685	.5519	.2353	.9187	.6021	.2855	.9689	.6523	.3357
851	.1353	.8187	.5021	.1855	.8689	.5523	.2357	.9191	.6025	.2859	.9694	.6528	.3362
854	.1356	.8191	.5025	.1859	.8693	.5527	.2361	.9196	.6030	.2864	.9698	.6532	.3366
857	.1360	.8194	.5028	.1863	.8697	.5531	.2366	.9200	.6034	.2868	.9703	.6537	.3371
420860	47.1363	48.8198	50.5032	52.1866	53.8701	55.5535	57.2370	58.9204	60.6038	62.2873	63.9707	65.6542	67.3376
863	.1367	.8201	.5036	.1870	.8705	.5539	.2374	.9208	.6043	.2877	.9712	.6546	.3381
866	.1370	.8205	.5039	.1874	.8708	.5543	.2378	.9212	.6047	.2882	.9716	.6551	.3386
869	.1373	.8208	.5043	.1878	.8712	.5547	.2382	.9217	.6051	.2886	.9721	.6556	.3390
872	.1377	.8212	.5046	.1881	.8716	.5551	.2386	.9221	.6056	.2891	.9725	.6560	.3395
420875	47.1380	48.8215	50.5050	52.1885	53.8720	55.5555	57.2390	58.9225	60.6060	62.2895	63.9730	65.6565	67.3400
878	.1383	.8218	.5054	.1889	.8724	.5559	.2394	.9229	.6064	.2899	.9735	.6570	.3405
881	.1387	.8222	.5057	.1892	.8728	.5563	.2398	.9233	.6069	.2904	.9739	.6574	.3410
884	.1390	.8225	.5061	.1896	.8732	.5567	.2402	.9238	.6073	.2908	.9744	.6579	.3414
887	.1393	.8229	.5064	.1900	.8735	.5571	.2406	.9242	.6077	.2913	.8748	.6584	.3419
420890	47.1397	48.8232	50.5068	52.1904	53.8739	55.5575	57.2410	58.9246	60.6082	62.2917	63.9753	65.6588	67.3424
893	.1400	.8236	.5072	.1907	.8743	.5579	.2414	.9250	.6086	.2922	.9757	.6593	.3429
896	.1404	.8239	.5075	.1911	.8747	.5583	.2419	.9254	.6090	.2926	.9762	.6598	.3434
899	.1407	.8243	.5079	.1915	.8751	.5587	.2423	.9259	.6095	.2931	.9766	.6602	.3438
902	.1410	.8246	.5082	.1918	.8755	.5591	.2427	.9263	.6099	.2935	.9771	.6607	.3443
420905	47.1414	48.8250	50.5086	52.1922	53.8758	55.5595	57.2431	58.9267	60.6103	62.2939	63.9776	65.6612	67.3448
908	.1417	.8253	.5090	.1926	.8762	.5599	.2435	.9271	.6108	.2944	.9780	.6616	.3453
911	.1420	.8257	.5093	.1930	.8766	.5603	.2439	.9275	.6112	.2948	.9785	.6621	.3458
914	.1424	.8260	.5097	.1933	.8770	.5606	.2443	.9280	.6116	.2953	.9789	.6626	.3462
917	.1427	.8264	.5100	.1937	.8774	.5610	.2447	.9284	.6120	.2957	.9794	.6631	.3467
420920	47.1430	48.8267	50.5104	52.1941	53.8778	55.5614	57.2451	58.9288	60.6125	62.2962	63.9798	65.6635	67.3472
923	.1434	.8271	.5108	.1945	.8781	.5618	.2455	.9292	.6129	.2966	.9803	.6640	.3477
926	.1437	.8274	.5111	.1948	.8785	.5622	.2459	.9296	.6133	.2970	.9808	.6645	.3482
929	.1440	.8278	.5115	.1952	.8789	.5626	.2463	.9301	.6138	.2975	.9812	.6649	.3486
932	.1444	.8281	.5118	.1956	.8793	.5630	.2468	.9305	.6142	.2979	.9817	.6654	.3491
420935	47.1447	48.8285	50.5122	52.1959	53.8797	55.5634	57.2472	58.9309	60.6146	62.2984	63.9821	65.6659	67.3496
938	.1451	.8288	.5126	.1963	.8801	.5638	.2476	.9313	.6151	.2988	.9826	.6663	.3501
941	.1454	.8292	.5129	.1967	.8804	.5642	.2480	.9317	.6155	.2993	.9830	.6668	.3506
944	.1457	.8295	.5133	.1971	.8808	.5646	.2484	.9322	.6159	.2997	.9835	.6673	.3510
947	.1461	.8299	.5136	.1974	.8812	.5650	.2488	.9326	.6164	.3002	.9839	.6677	.3515
420950	47.1464	48.8302	50.5140	52.1978	53.8816	55.5654	57.2492	58.9330	60.6168	62.3006	63.9844	65.6682	67.3520
953	.1467	.8305	.5144	.1982	.8820	.5658	.2496	.9334	.6172	.3010	.9849	.6687	.3525
956	.1471	.8309	.5147	.1985	.8824	.5662	.2500	.9338	.6177	.3015	.9853	.6691	.3530
959	.1474	.8312	.5151	.1989	.8828	.5666	.2504	.9343	.6181	.3019	.9858	.6696	.3534
962	.1477	.8316	.5154	.1993	.8831	.5670	.2508	.9347	.6185	.3024	.9862	.6701	.3539
420965	47.1481	48.8319	50.5158	52.1997	53.8835	55.5674	57.2512	58.9351	60.6190	62.3028	63.9867	65.6705	67.3544
968	.1484	.8323	.5162	.2000	.8839	.5678	.2516	.9355	.6194	.3033	.9871	.6710	.3549
971	.1488	.8326	.5165	.2004	.8843	.5682	.2521	.9359	.6198	.3037	.9876	.6715	.3554
974	.1491	.8330	.5169	.2008	.8847	.5686	.2525	.9364	.6203	.3042	.9880	.6719	.3558
977	.1494	.8333	.5172	.2011	.8851	.5690	.2529	.9368	.6207	.3046	.9885	.6724	.3563
420980	47.1498	48.8337	50.5176	52.2015	53.8854	55.5694	57.2533	58.9372	60.6211	62.3050	63.9890	65.6729	67.3568
983	.1501	.8340	.5180	.2019	.8858	.5698	.2537	.9376	.6216	.3055	.9894	.6733	.3573
986	.1504	.8344	.5183	.2023	.8862	.5702	.2541	.9380	.6220	.3059	.9899	.6738	.3578
989	.1508	.8347	.5187	.2026	.8866	.5705	.2545	.9385	.6224	.3064	.9903	.6743	.3582
992	.1511	.8351	.5190	.2030	.8870	.5709	.2549	.9389	.6228	.3068	.9908	.6748	.3587
420995	47.1514	48.8354	50.5194	52.2034	53.8874	55.5713	57.2553	58.9393	60.6233	62.3073	63.9912	65.6752	67.3592
998	.1518	.8358	.5198	.2038	.8877	.5717	.2557	.9397	.6237	.3077	.9917	.6757	.3597
421001	.1521	.8361	.5201	.2041	.8881	.5721	.2561	.9401	.6241	.3081	.9922	.6762	.3602
004	.1524	.8365	.5205	.2045	.8885	.5725	.2565	.9406	.6246	.3086	.9926	.6766	.3606
007	.1528	.8368	.5208	.2049	.8889	.5729	.2570	.9410	.6250	.3090	.9931	.6771	.3611
421010	47.1531	48.8372	50.5212	52.2052	53.8893	55.5733	57.2574	58.9414	60.6254	62.3095	63.9935	65.6776	67.3616
013	.1535	.8375	.5216	.2056	.8897	.5737	.2578	.9418	.6259	.3099	.9940	.6780	.3621
016	.1538	.8379	.5219	.2060	.8900	.5741	.2582	.9422	.6263	.3104	.9944	.6785	.3626
019	.1541	.8382	.5223	.2064	.8904	.5745	.2586	.9427	.6267	.3108	.9949	.6790	.3630
022	.1545	.8386	.5226	.2067	.8908	.5749	.2590	.9431	.6272	.3113	.9953	.6794	.3635
421025	47.1548	48.8389	50.5230	52.2071	53.8912	55.5753	57.2594	58.9435	60.6276	62.3117	63.9958	65.6799	67.3640
028	.1551	.8392	.5234	.2075	.8916	.5757	.2598	.9439	.6280	.3121	.9963	.6804	.3645
031	.1555	.8396	.5237	.2078	.8920	.5761	.2602	.9443	.6285	.3126	.9967	.6808	.3650
034	.1558	.8399	.5241	.2082	.8924	.5765	.2606	.9448	.6289	.3130	.9972	.6813	.3654
037	.1561	.8403	.5244	.2086	.8927	.5769	.2610	.9452	.6293	.3135	.9976	.6818	.3659
421040	47.1565	48.8406	50.5248	52.2090	53.8931	55.5773	57.2614	58.9456	60.6298	62.3139	63.9981	65.6822	67.3664
043	.1568	.8410	.5252	.2093	.8935	.5777	.2618	.9460	.6302	.3144	.9985	.6827	.3669
046	.1572	.8413	.5255	.2097	.8939	.5781	.2623	.9464	.6306	.3148	.9990	.6832	.3674
049	.1575	.8417	.5259	.2101	.8943	.5785	.2627	.9469	.6311	.3153	.9994	.6836	.3678
052	.1578	.8420	.5262	.2104	.8947	.5789	.2631	.9473	.6315	.3157	.9999	.6841	.3683
421055	47.1582	48.8424	50.5266	52.2108	53.8950	55.5793	57.2635	58.9477	60.6319	62.3161	64.0004	65.6846	67.3688
058	.1585	.8427	.5270	.2112	.8954	.5797	.2639	.9481	.6324	.3166	.0008	.6850	.3693
061	.1588	.8431	.5273	.2116	.8958	.5801	.2643	.9485	.6328	.3170	.0013	.6855	.3698
064	.1592	.8434	.5277	.2119	.8962	.5804	.2647	.9490	.6332	.3175	.0017	.6860	.3702
067	.1595	.8438	.5280	.2123	.8966	.5808	.2651	.9494	.6336	.3179	.0022	.6865	.3707
421070	47.1598	48.8441	50.5284	52.2127	53.8970	55.5812	57.2655	58.9498	60.6341	62.3184	64.0026	65.6869	67.3712
073	.1602	.8445	.5288	.2131	.8973	.5816	.2659	.9502	.6345	.3188	.0031	.6874	.3717
076	.1605	.8448	.5291	.2134	.8977	.5820	.2663	.9506	.6349	.3192	.0036	.6879	.3722
079	.1608	.8452	.5295	.2138	.8981	.5824	.2667	.9511	.6354	.3197	.0040	.6883	.3726
082	.1612	.8455	.5298	.2142	.8985	.5828	.2672	.9515	.6358	.3201	.0045	.6888	.3731
421085	47.1615	48.8459	50.5302	52.2145	53.8989	55.5832	57.2676	58.9519	60.6362	62.3206	64.0049	65.6893	67.3736
088	.1619	.8462	.5306	.2149	.8993	.5836	.2680	.9523	.6367	.3210	.0054	.6897	.3741
091	.1622	.8466	.5309	.2153	.8996	.5840	.2684	.9527	.6371	.3215	.0058	.6902	.3746
094	.1625	.8469	.5313	.2157	.9000	.5844	.2688	.9532	.6375	.3219	.0063	.6907	.3750
097	.1629	.8473	.5316	.2160	.9004	.5848	.2692	.9536	.6380	.3224	.0067	.6911	.3755
421100	47.1632	48.8476	50.5320	52.2164	53.9008	55.5852	57.2696	58.9540	60.6384	62.3228	64.0072	65.6916	67.3760

MEGACYCLES PER SECOND

HARMONICS

BASIC FREQ.	164	168	172	176	180	184	188	192	200	208	216	224	232
420800	69.0112	70.6944	72.3776	74.0608	75.7440	77.4272	79.1104	80.7926	84.1600	87.5264	90.8928	94.2592	97.6256
803	.0117	.6949	.3781	.0613	.7445	.4278	.1110	.7942	.1606	.5270	.8934	.2599	.6263
806	.0122	.6954	.3786	.0619	.7451	.4283	.1115	.7948	.1612	.5276	.8941	.2605	.6270
809	.0127	.6959	.3791	.0624	.7456	.4289	.1121	.7953	.1618	.5283	.8947	.2612	.6277
812	.0132	.6964	.3797	.0629	.7462	.4294	.1127	.7959	.1624	.5289	.8954	.2619	.7684
420815	69.0137	70.6969	72.3802	74.0634	75.7467	77.4300	79.1132	80.7965	84.1630	87.5295	90.8960	94.2626	97.6291
818	.0142	.6974	.3807	.0640	.7472	.4305	.1138	.7971	.1636	.5301	.8967	.2632	.6298
821	.0146	.6979	.3812	.0645	.7478	.4311	.1143	.7976	.1642	.5308	.8973	.2639	.6305
824	.0151	.6984	.3817	.0650	.7483	.4316	.1149	.7982	.1648	.5314	.8980	.2646	.6312
827	.0156	.6989	.3822	.0656	.7489	.4322	.1155	.7988	.1654	.5320	.8986	.2652	.6319
420830	69.0161	70.6994	72.3828	74.0661	75.7494	77.4327	79.1160	80.7994	84.1660	87.5326	90.8993	94.8659	97.6326
833	.0166	.6999	.3833	.0666	.7499	.4333	.1166	.7999	.1666	.5333	.8999	.2666	.6333
836	.0171	.7004	.3838	.0671	.7505	.4338	.1172	.8005	.1672	.5339	.9006	.2673	.6340
839	.0176	.7010	.3843	.0677	.7510	.4344	.1177	.8011	.1678	.5345	.9012	.2679	.6346
842	.0181	.7015	.3848	.0682	.7516	.4349	.1183	.8017	.1684	.5351	.9019	.2686	.6353
420845	69.0186	70.7020	72.3853	74.0687	75.7521	77.4355	79.1189	80.8022	84.1690	87.5358	90.9025	94.2693	97.6360
848	.0191	.7025	.3859	.0692	.7526	.4360	.1194	.8028	.1696	.5364	.9032	.2700	.6367
851	.0196	.7030	.3864	.0698	.7532	.4366	.1200	.8034	.1702	.5370	.9038	.2706	.6374
854	.0201	.7035	.3869	.0703	.7537	.4371	.1206	.8040	.1708	.5376	.9045	.2713	.6381
857	.0205	.7040	.3874	.0708	.7543	.4377	.1211	.8045	.1714	.5383	.9051	.2720	.6388
420860	69.0210	70.7045	72.3879	74.0714	75.7548	77.4382	79.1217	80.8051	84.1720	87.5389	90.9058	94.2726	97.6395
863	.0215	.7050	.3884	.0719	.7553	.4388	.1222	.8057	.1726	.5395	.9064	.3733	.6402
866	.0220	.7055	.3890	.0724	.7559	.4393	.1228	.8063	.1732	.5401	.9071	.2740	.6409
869	.0225	.7060	.3895	.0729	.7564	.4399	.1234	.8068	.1738	.5408	.9077	.2747	.6416
872	.0230	.7065	.3900	.0735	.7570	.4404	.1239	.8074	.1744	.5414	.9084	.2753	.6422
420875	69.0235	70.7070	72.3905	74.0740	75.7575	77.4410	79.1245	80.8080	84.1750	87.5420	90.9090	94.2760	97.6430
878	.0240	.7075	.3910	.0745	.7580	.4416	.1251	.8086	.1756	.5426	.9096	.2767	.6437
881	.0245	.7080	.3915	.0751	.7586	.4421	.1256	.8092	.1762	.5432	.9103	.2773	.6444
884	.0250	.7085	.3920	.0756	.7591	.4427	.1262	.8097	.1768	.5439	.9109	.2780	.6451
887	.0255	.7090	.3926	.0761	.7597	.4432	.1268	.8103	.1774	.5445	.9116	.2787	.6458
420890	69.0260	70.7095	72.3931	74.0766	75.7602	77.4438	79.1273	80.8109	84.1780	87.5451	90.9122	94.2794	97.6465
893	.0265	.7100	.3936	.0772	.7607	.4443	.1279	.8115	.1786	.5457	.9129	.2800	.6472
896	.0269	.7105	.3941	.0777	.7613	.4449	.1284	.8120	.1792	.5464	.9135	.2807	.6479
899	.0274	.7110	.3946	.0782	.7618	.4454	.1290	.8126	.1798	.5470	.9142	.2814	.6486
902	.0279	.7115	.3951	.0788	.7624	.4460	.1296	.8132	.1804	.5476	.9148	.2820	.6493
420905	69.0284	70.7120	72.3957	74.0793	75.7629	77.4465	79.1301	80.8138	84.1810	87.5482	90.9155	94.2827	97.6500
908	.0289	.7125	.3962	.0798	.7634	.4471	.1307	.8143	.1816	.5489	.9161	.2834	.6507
911	.0294	.7130	.3967	.0803	.7640	.4476	.1313	.8149	.1822	.5495	.9168	.2841	.6514
914	.0299	.7136	.3972	.0809	.7645	.4482	.1318	.8155	.1828	.5501	.9174	.2847	.6520
917	.0304	.7141	.3977	.0814	.7651	.4487	.1324	.8161	.1834	.5507	.9181	.2854	.6527
420920	69.0309	70.7146	72.3982	74.0819	75.7656	77.4493	79.1330	80.8166	84.1840	87.5514	90.9187	94.2861	97.6534
923	.0314	.7151	.3988	.0824	.7661	.4498	.1335	.8172	.1846	.5520	.9194	.2868	.6541
926	.0319	.7156	.3993	.0830	.7667	.4504	.1341	.8178	.1852	.5526	.9200	.2874	.6548
929	.0324	.7161	.3998	.0835	.7672	.4509	.1347	.8184	.1858	.5532	.9207	.2881	.6555
932	.0328	.7166	.4003	.0840	.7678	.4515	.1352	.8189	.1864	.5539	.9213	.2888	.6562
420935	69.0333	70.7171	72.4008	74.0846	75.7683	77.4520	79.1358	80.8195	84.1870	87.5545	90.9220	94.2894	97.6569
938	.0338	.7176	.4013	.0851	.7688	.4526	.1363	.8201	.1876	.5551	.9226	.2901	.6576
941	.0343	.7181	.4019	.0856	.7694	.4531	.1369	.8207	.1882	.5557	.9233	.2908	.6583
944	.0348	.7186	.4024	.0861	.7699	.4537	.1375	.8212	.1888	.5564	.9239	.2915	.6590
947	.0353	.7191	.4029	.0867	.7705	.4542	.1380	.8218	.1894	.5570	.9246	.2921	.6597
420950	69.0358	70.7196	72.4034	74.0872	75.7710	77.4548	79.1386	80.8224	84.1900	87.5576	90.9252	94.2928	97.6604
953	.0363	.7201	.4039	.0877	.7715	.4554	.1392	.8230	.1906	.5582	.9258	.2935	.6611
956	.0368	.7206	.4044	.0883	.7721	.4559	.1397	.8236	.1912	.5588	.9265	.2941	.6618
959	.0373	.7211	.4049	.0888	.7726	.4565	.1403	.8241	.1918	.5595	.9271	.2948	.6625
962	.0378	.7216	.4055	.0893	.7732	.4570	.1409	.8247	.1924	.5601	.9278	.2955	.6632
420965	69.0383	70.7221	72.4060	74.0898	75.7737	77.4576	79.1414	80.8253	84.1930	87.5607	90.9284	94.2962	97.6639
968	.0388	.7226	.4065	.0904	.7742	.4581	.1420	.8259	.1936	.5613	.9291	.2968	.6646
971	.0392	.7231	.4070	.0909	.7748	.4587	.1425	.8264	.1942	.5620	.9297	.2975	.6653
974	.0397	.7236	.4075	.0914	.7753	.4592	.1431	.8270	.1948	.5626	.9304	.2982	.6660
977	.0402	.7241	.4080	.0920	.7759	.4598	.1437	.8276	.1954	.5632	.9310	.2988	.6667
420980	69.0407	70.7246	72.4086	74.0925	75.7764	77.4603	79.1442	80.8282	84.1960	87.5638	90.9317	94.2995	97.6674
983	.0412	.7251	.4091	.0930	.7769	.4609	.1448	.8287	.1966	.5645	.9323	.3002	.6681
986	.0417	.7256	.4096	.0935	.7775	.4614	.1454	.8293	.1972	.5651	.9330	.3009	.6688
989	.0422	.7262	.4101	.0941	.7780	.4620	.1459	.8299	.1978	.5657	.9336	.3015	.6694
992	.0427	.7267	.4106	.0946	.7786	.4625	.1465	.8305	.1984	.5663	.9343	.3022	.6701
420995	69.0432	70.7272	72.4111	74.0951	75.7791	77.4631	79.1471	80.8310	84.1990	87.5670	90.9349	94.3029	97.6708
998	.0437	.7277	.4117	.0956	.7796	.4636	.1476	.8316	.1996	.5676	.9356	.3036	.6715
421001	.0442	.7282	.4122	.0962	.7802	.4642	.1482	.8322	.2002	.5682	.9362	.3042	.6722
004	.0447	.7287	.4127	.0967	.7807	.4647	.1488	.8328	.2008	.5688	.9369	.3049	.6729
007	.0451	.7292	.4132	.0972	.7813	.4653	.1493	.8333	.2014	.5695	.9375	.3056	.6736
421010	69.0456	70.7297	72.4137	74.0978	75.7818	77.4658	79.1499	80.8339	84.2020	87.5701	90.9382	94.3062	97.6743
013	.0461	.7302	.4142	.0983	.7823	.4664	.1504	.8345	.2026	.5707	.9388	.3069	.6750
016	.0466	.7307	.4148	.0988	.7829	.4669	.1510	.8351	.2032	.5713	.9395	.3076	.6757
019	.0471	.7312	.4153	.0993	.7834	.4675	.1516	.8356	.2038	.5720	.9401	.3083	.6764
022	.0476	.7317	.4158	.0999	.7840	.4680	.1521	.8362	.2044	.5726	.9408	.3089	.6771
421025	69.0481	70.7322	72.4163	74.1004	75.7845	77.4686	79.1527	80.8368	84.2050	87.5732	90.9414	94.3096	97.6778
028	.0486	.7327	.4168	.1009	.7850	.4692	.1533	.8374	.2056	.5738	.9420	.3103	.6785
031	.0491	.7332	.4173	.1015	.7856	.4697	.1538	.8380	.2062	.5744	.9427	.3109	.6792
034	.0496	.7337	.4178	.1020	.7861	.4703	.1544	.8385	.2068	.5751	.9433	.3116	.6799
037	.0501	.7342	.4184	.1025	.7867	.4708	.1550	.8391	.2074	.5757	.9440	.3123	.6806
421040	69.0506	70.7347	72.4189	74.1030	75.7872	77.4714	79.1555	80.8397	84.2080	87.5763	90.9446	94.3130	97.6813
043	.0511	.7352	.4194	.1036	.7877	.4719	.1561	.8403	.2086	.5769	.9453	.3136	.6820
046	.0515	.7357	.4199	.1041	.7883	.4725	.1566	.8408	.2092	.5776	.9459	.3143	.6827
049	.0520	.7362	.4204	.1046	.7888	.4730	.1572	.8414	.2098	.5782	.9466	.3150	.6834
052	.0525	.7367	.4209	.1052	.7894	.4736	.1578	.8420	.2104	.5788	.9472	.3156	.6841
421055	69.0530	70.7372	72.4215	74.1057	75.7899	77.4741	79.1583	80.8426	84.2110	87.5794	90.9479	94.3163	97.6848
058	.0535	.7377	.4220	.1062	.7904	.4747	.1589	.8431	.2116	.5801	.9485	.3170	.6855
061	.0540	.7382	.4225	.1067	.7910	.4752	.1595	.8437	.2122	.5807	.9492	.3177	.6862
064	.0545	.7388	.4230	.1073	.7915	.4758	.1600	.8443	.2128	.5813	.9498	.3183	.6868
067	.0550	.7393	.4235	.1078	.7921	.4763	.1606	.8449	.2134	.5819	.9505	.3190	.6875
421070	69.0555	70.7398	72.4240	74.1083	75.7926	77.4769	79.1612	80.8454	84.2140	87.5826	90.9511	94.3197	97.6882
073	.0560	.7403	.4246	.1088	.7931	.4774	.1617	.8460	.2146	.5832	.9518	.3204	.6889
076	.0565	.7408	.4251	.1094	.7937	.4780	.1623	.8466	.2152	.5838	.9524	.3210	.6896
079	.0570	.7413	.4256	.1099	.7942	.4785	.1629	.8472	.2158	.5844	.9531	.3217	.6903
082	.0574	.7418	.4261	.1104	.7948	.4791	.1634	.8477	.2164	.5851	.9437	.3224	.6910
421085	69.0579	70.7423	72.4266	74.1110	75.7953	77.4796	79.1640	80.8483	84.2170	87.5857	90.9544	94.3230	97.6917
088	.0584	.7428	.4271	.1115	.7958	.4802	.1645	.8489	.2176	.5863	.9550	.3237	.6924
091	.0589	.7433	.4277	.1120	.7964	.4807	.1651	.8495	.2182	.5869	.9557	.3244	.6931
094	.0594	.7438	.4282	.1125	.7969	.4813	.1657	.8500	.2188	.5876	.9563	.3251	.6938
097	.0599	.7443	.4287	.1131	.7975	.4818	.1662	.8506	.2194	.5882	.9570	.3257	.6945
421100	69.0604	70.7448	72.4292	74.1136	75.7980	77.4824	79.1668	80.8512	84.2200	87.5888	90.9576	94.3264	97.6952

H A R M O N I C S

BASIC FREQ.	112	116	120	124	128	132	136	140	144	148	152	156	160
421100	47.1632	48.8476	50.5320	52.2164	53.9008	55.5852	57.2696	58.9540	60.6384	62.3228	64.0072	65.6916	67.3760
103	.1635	.8479	.5324	.2168	.9012	.5856	.2700	.9544	.6388	.3232	.0077	.6921	.3765
106	.1639	.8483	.5327	.2171	.9016	.5860	.2704	.9548	.6393	.3237	.0081	.6925	.3770
109	.1642	.8486	.5331	.2175	.9020	.5864	.2708	.9553	.6397	.3241	.0086	.6930	.3774
112	.1645	.8490	.5334	.2179	.9023	.5868	.2712	.9557	.6401	.3246	.0090	.6935	.3779
421115	47.1649	48.8493	50.5338	52.2183	53.9027	55.5872	57.2716	58.9561	60.6406	62.3250	64.0095	65.6939	67.3784
118	.1652	.8497	.5342	.2186	.9031	.5876	.2720	.9565	.6410	.3255	.0099	.6944	.3789
121	.1656	.8500	.5345	.2190	.9035	.5880	.2725	.9569	.6414	.3259	.0104	.6949	.3794
124	.1659	.8504	.5349	.2194	.9039	.5884	.2729	.9574	.6419	.3264	.0108	.6953	.3798
127	.1662	.8507	.5352	.2197	.9043	.5888	.2733	.9578	.6423	.3268	.0113	.6958	.3803
421130	47.1666	48.8511	50.5356	52.2201	53.9046	55.5892	57.2737	58.9582	60.6427	62.3272	64.0118	65.6963	67.3808
133	.1669	.8514	.5360	.2205	.9050	.5896	.2741	.9586	.6432	.3277	.0122	.6967	.3813
136	.1672	.8518	.5363	.2209	.9054	.5900	.2745	.9590	.6436	.3281	.0127	.6972	.3818
139	.1676	.8521	.5367	.2212	.9058	.5903	.2749	.9595	.6440	.3286	.0131	.6977	.3822
142	.1679	.8525	.5370	.2216	.9062	.5907	.2753	.9599	.6444	.3290	.0136	.6982	.3827
421145	47.1682	48.8528	50.5374	52.2220	53.9066	55.5911	57.2757	58.9603	60.6449	62.3295	64.0140	65.6986	67.3832
148	.1686	.8532	.5378	.2224	.9069	.5915	.2761	.9607	.6453	.3299	.0145	.6991	.3837
151	.1689	.8535	.5381	.2227	.9073	.5919	.2765	.9611	.6457	.3303	.0150	.6996	.3842
154	.1692	.8539	.5385	.2231	.9077	.5923	.2769	.9616	.6462	.3308	.0154	.7000	.3846
157	.1696	.8542	.5388	.2235	.9081	.5927	.2774	.9620	.6466	.3312	.0159	.7005	.3851
421160	47.1699	48.8546	50.5392	52.2238	53.9085	55.5931	57.2778	58.9624	60.6470	62.3317	64.0163	65.7010	67.3856
163	.1703	.8549	.5396	.2242	.9089	.5935	.2782	.9628	.6475	.3321	.0168	.7014	.3861
166	.1706	.8553	.5399	.2246	.9092	.5939	.2786	.9632	.6479	.3326	.0172	.7019	.3866
169	.1709	.8556	.5403	.2250	.9096	.5943	.2790	.9637	.6483	.3330	.0177	.7024	.3870
172	.1713	.8560	.5406	.2253	.9100	.5947	.2794	.9641	.6488	.3335	.0181	.7028	.3875
421175	47.1716	48.8563	50.5410	52.2257	53.9104	55.5951	57.2798	58.9645	60.6492	62.3339	64.0186	65.7033	67.3880
178	.1719	.8566	.5414	.2261	.9108	.5955	.2802	.9649	.6496	.3343	.0191	.7038	.3885
181	.1723	.8570	.5417	.2264	.9112	.5959	.2806	.9653	.6501	.3348	.0195	.7042	.3890
184	.1726	.8573	.5421	.2268	.9116	.5963	.2810	.9658	.6505	.3352	.0200	.7047	.3894
187	.1729	.8577	.5424	.2272	.9119	.5967	.2814	.9662	.6509	.3357	.0204	.7052	.3899
421190	47.1733	48.8580	50.5428	52.2276	53.9123	55.5971	57.2818	58.9666	60.6514	62.3361	64.0209	65.7056	67.3904
193	.1726	.8584	.5432	.2279	.9127	.5975	.2822	.9670	.6518	.3366	.0213	.7061	.3909
196	.1740	.8587	.5435	.2283	.9131	.5979	.2827	.9674	.6522	.3370	.0218	.7066	.3914
199	.1743	.8591	.5439	.2287	.9135	.5983	.2831	.9679	.6527	.3375	.0222	.7070	.3918
202	.1746	.8594	.5442	.2290	.9139	.5987	.2835	.9683	.6531	.3379	.0227	.7075	.3923
421205	47.1750	48.8598	50.5446	52.2294	53.9142	55.5991	57.2839	58.9687	60.6535	62.3383	64.0232	65.7080	67.3928
208	.1753	.8601	.5450	.2298	.9146	.5995	.2843	.9691	.6540	.3388	.0236	.7084	.3933
211	.1756	.8605	.5453	.2302	.9150	.5999	.2847	.9695	.6544	.3392	.0241	.7089	.3938
214	.1760	.8608	.5457	.2305	.9154	.6002	.2851	.9700	.6548	.3397	.0245	.7094	.3942
217	.1763	.8612	.5460	.2309	.9158	.6006	.2855	.9704	.6552	.3401	.0250	.7099	.3947
421220	47.1766	48.8615	50.5464	52.2313	53.9162	55.6010	57.2859	58.9708	60.6557	62.3406	64.0254	65.7103	67.3952
223	.1770	.8619	.5468	.2317	.9165	.6014	.2863	.9712	.6561	.3410	.0259	.7108	.3957
226	.1773	.8622	.5471	.2320	.9169	.6018	.2867	.9716	.6565	.3414	.0264	.7113	.3962
229	.1776	.8626	.5475	.2324	.9173	.6022	.2871	.9721	.6570	.3419	.0268	.7117	.3966
232	.1780	.8629	.5478	.2328	.9177	.6026	.2876	.9725	.6574	.3423	.0273	.7122	.3971
421235	47.1783	48.8633	50.5482	52.2331	53.9181	55.6030	57.2880	58.9729	60.6578	62.3428	64.0277	65.7127	67.3976
238	.1787	.8636	.5486	.2335	.9185	.6034	.2884	.9733	.6583	.3432	.0282	.7131	.3981
241	.1790	.8640	.5489	.2339	.9188	.6038	.2888	.9737	.6587	.3437	.0286	.7136	.3986
244	.1793	.8643	.5493	.2343	.9192	.6042	.2892	.9742	.6591	.3441	.0291	.7141	.3990
247	.1797	.8647	.5496	.2346	.9196	.6046	.2896	.9746	.6596	.3446	.0295	.7145	.3995
421250	47.1800	48.8650	50.5500	52.2350	53.9200	55.6050	57.2900	58.9750	60.6600	62.3450	64.0300	65.7150	67.4000
253	.1803	.8653	.5504	.2354	.9204	.6054	.2904	.9754	.6604	.3454	.0305	.7155	.4005
256	.1807	.8657	.5507	.2357	.9208	.6058	.2908	.9758	.6609	.3459	.0309	.7159	.4010
259	.1810	.8660	.5511	.2361	.9212	.6062	.2912	.9763	.6613	.3463	.0314	.7164	.4014
262	.1813	.8664	.5514	.2365	.9215	.6066	.2916	.9767	.6617	.3468	.0318	.7169	.4019
421265	47.1817	48.8667	50.5518	52.2369	53.9219	55.6070	57.2920	58.9771	60.6622	62.3472	64.0323	65.7173	67.4024
268	.1820	.8671	.5522	.2372	.9223	.6074	.2924	.9775	.6626	.3477	.0327	.7178	.4029
271	.1824	.8674	.5525	.2376	.9227	.6078	.2929	.9779	.6630	.3481	.0332	.7183	.4034
274	.1827	.8678	.5529	.2380	.9231	.6082	.2933	.9784	.6635	.3486	.0336	.7187	.4038
277	.1830	.8681	.5532	.2383	.9235	.6086	.2937	.9788	.6639	.3490	.0341	.7192	.4043
421280	47.1834	48.8685	50.5536	52.2387	53.9238	55.6090	57.2941	58.9792	60.6643	62.3494	64.0346	65.7197	67.4048
283	.1837	.8688	.5540	.2391	.9242	.6094	.2945	.9796	.6648	.3499	.0350	.7201	.4053
286	.1840	.8692	.5543	.2395	.9246	.6098	.2949	.9800	.6652	.3503	.0355	.7206	.4058
289	.1844	.8695	.5547	.2398	.9250	.6101	.2953	.9805	.6656	.3508	.0359	.7211	.4062
292	.1847	.8699	.5550	.2402	.9254	.6105	.2957	.9809	.6660	.3512	.0364	.7216	.4067
421295	47.1850	48.8702	50.5554	52.2406	53.9258	55.6109	57.2961	58.9813	60.6665	62.3517	64.0368	65.7220	67.4072
298	.1854	.8706	.5558	.2410	.9261	.6113	.2965	.9817	.6669	.3521	.0373	.7225	.4077
301	.1857	.8709	.5561	.2413	.9265	.6117	.2969	.9821	.6673	.3525	.0378	.7230	.4082
304	.1860	.8713	.5565	.2417	.9269	.6121	.2973	.9826	.6678	.3530	.0382	.7234	.4086
307	.1864	.8716	.5568	.2421	.9273	.6125	.2978	.9830	.6682	.3534	.0387	.7239	.4091
421310	47.1867	48.8720	50.5572	52.2424	53.9277	55.6129	57.2982	58.9834	60.6686	62.3539	64.0391	65.7244	67.4096
313	.1871	.8723	.5576	.2428	.9281	.6133	.2986	.9838	.6691	.3543	.0396	.7248	.4101
316	.1874	.8727	.5579	.2432	.9284	.6137	.2990	.9842	.6695	.3548	.0400	.7253	.4106
319	.1877	.8730	.5583	.2436	.9288	.6141	.2994	.9847	.6699	.3552	.0405	.7258	.4110
322	.1881	.8734	.5586	.2439	.9292	.6145	.2998	.9851	.6704	.3557	.0409	.7262	.4115
421325	47.1884	48.8737	50.5590	52.2443	53.9296	55.6149	57.3002	58.9855	60.6708	62.3561	64.0414	65.7267	67.4120
328	.1887	.8740	.5594	.2447	.9300	.6153	.3006	.9859	.6712	.3565	.0419	.7272	.4125
331	.1891	.8744	.5597	.2450	.9304	.6157	.3010	.9863	.6717	.3570	.0423	.7276	.4130
334	.1894	.8747	.5601	.2454	.9308	.6161	.3014	.9868	.6721	.3574	.0428	.7281	.4134
337	.1897	.8751	.5604	.2458	.9311	.6165	.3018	.9872	.6725	.3579	.0432	.7286	.4139
421340	47.1901	48.8754	50.5608	52.2462	53.9315	55.6169	57.3022	58.9876	60.6730	62.3583	64.0437	65.7290	67.4144
343	.1904	.8758	.5612	.2465	.9319	.6173	.3026	.9880	.6734	.3588	.0441	.7295	.4149
346	.1908	.8761	.5615	.2469	.9323	.6177	.3031	.9884	.6738	.3592	.0446	.7300	.4154
349	.1911	.8765	.5619	.2473	.9327	.6181	.3035	.9889	.6743	.3597	.0450	.7304	.4158
352	.1914	.8768	.5622	.2476	.9331	.6185	.3039	.9893	.6747	.3601	.0455	.7309	.4163
421355	47.1918	48.8772	50.5626	52.2480	53.9334	55.6189	57.3043	58.9897	60.6751	62.3605	64.0460	65.7314	67.4168
358	.1921	.8775	.5630	.2484	.9338	.6193	.3047	.9901	.6756	.3610	.0464	.7318	.4173
361	.1924	.8779	.5633	.2488	.9342	.6197	.3051	.9905	.6760	.3614	.0469	.7323	.4178
364	.1928	.8782	.5637	.2491	.9346	.6200	.3055	.9910	.6764	.3619	.0473	.7328	.4182
367	.1931	.8786	.5640	.2495	.9350	.6204	.3059	.9914	.6768	.3623	.0478	.7333	.4187
421370	47.1934	48.8789	50.5644	52.2499	53.9354	55.6208	57.3063	58.9918	60.6773	62.3628	64.0482	65.7337	67.4192
373	.1938	.8793	.5648	.2503	.9357	.6212	.3067	.9922	.6777	.3632	.0487	.7342	.4197
376	.1941	.8796	.5651	.2506	.9361	.6216	.3071	.9926	.6781	.3636	.0492	.7347	.4202
379	.1944	.8800	.5655	.2510	.9365	.6220	.3075	.9931	.6786	.3641	.0496	.7351	.4206
382	.1948	.8803	.5658	.2514	.9369	.6224	.3080	.9935	.6790	.3645	.0501	.7356	.4211
421385	47.1951	48.8807	50.5662	52.2517	53.9373	55.6228	57.3084	58.9939	60.6794	62.3650	64.0505	65.7361	67.4216
388	.1955	.8810	.5666	.2521	.9377	.6232	.3088	.9943	.6799	.3654	.0510	.7365	.4221
391	.1958	.8814	.5669	.2525	.9380	.6236	.3092	.9947	.6803	.3659	.0514	.7370	.4226
394	.1961	.8817	.5673	.2529	.9384	.6240	.3096	.9952	.6807	.3663	.0519	.7375	.4230
397	.1965	.8821	.5676	.2532	.9388	.6244	.3100	.9956	.6812	.3668	.0523	.7379	.4235
421400	47.1968	48.8824	50.5680	52.2536	53.9392	55.6248	57.3104	58.9960	60.6816	62.3672	64.0528	65.7384	67.4240

MEGACYCLES PER SECOND

HARMONICS

BASIC FREQ.	164	168	172	176	180	184	188	192	200	208	216	224	232
421100	69.0604	70.7448	72.4292	74.1136	75.7980	77.4824	79.1668	80.8512	84.2200	87.5888	90.9576	94.3264	97.6952
103	.0609	.7453	.4297	.1141	.7985	.4830	.1674	.8518	.2206	.5894	.9582	.3271	.6959
106	.0614	.7458	.4302	.1147	.7991	.4835	.1679	.8524	.2212	.5900	.9589	.3277	.6966
109	.0619	.7463	.4307	.1152	.7996	.4841	.1685	.8529	.2218	.5907	.9595	.3284	.6973
112	.0624	.7468	.4313	.1157	.8002	.4846	.1691	.8535	.2224	.5913	.9602	.3291	.6980
421115	69.0629	70.7473	72.4318	74.1162	75.8007	77.4852	79.1696	80.8541	84.2230	87.5919	90.9608	94.3298	97.6987
118	.0634	.7478	.4323	.1168	.8012	.4857	.1702	.8547	.2236	.5925	.9615	.3304	.6994
121	.0638	.7483	.4328	.1173	.8018	.4863	.1707	.8552	.2242	.5932	.9621	.3311	.7001
124	.0643	.7488	.4333	.1178	.8023	.4868	.1713	.8558	.2248	.5938	.9628	.3318	.7008
127	.0648	.7493	.4338	.1184	.8029	.4874	.1719	.8564	.2254	.5944	.9634	.3324	.7015
421130	69.0653	70.7498	72.4344	74.1189	75.8034	77.4879	79.1724	80.8570	84.2260	87.5950	90.9641	94.3331	97.7022
133	.0658	.7503	.4349	.1194	.8039	.4885	.1730	.8575	.2266	.5957	.9647	.3338	.7029
136	.0663	.7508	.4354	.1199	.8045	.4890	.1736	.8581	.2272	.5963	.9654	.3345	.7036
139	.0668	.7514	.4359	.1205	.8050	.4896	.1741	.8587	.2278	.5969	.9660	.3351	.7042
142	.0673	.7519	.4364	.1210	.8056	.4901	.1747	.8593	.2284	.5975	.9667	.3358	.7049
421145	69.0678	70.7524	72.4369	74.1215	75.8061	77.4907	79.1753	80.8598	84.2290	87.5982	90.9673	94.3365	97.7056
148	.0683	.7529	.4375	.1220	.8066	.4912	.1758	.8604	.2296	.5988	.9680	.3372	.7063
151	.0688	.7534	.4380	.1226	.8072	.4918	.1764	.8610	.2302	.5994	.9686	.3378	.7070
154	.0693	.7539	.4385	.1231	.8077	.4923	.1770	.8616	.2308	.6000	.9693	.3385	.7077
157	.0697	.7544	.4390	.1236	.8083	.4929	.1775	.8621	.2314	.6007	.9699	.3392	.7084
421160	69.0702	70.7549	72.4395	74.1242	75.8088	77.4934	79.1781	80.8627	84.2320	87.6013	90.9706	94.3398	97.7091
163	.0707	.7554	.4400	.1247	.8093	.4940	.1786	.8633	.2326	.6019	.9712	.3405	.7098
166	.0712	.7559	.4406	.1252	.8099	.4945	.1792	.8639	.2332	.6025	.9719	.3412	.7105
169	.0717	.7564	.4411	.1257	.8104	.4951	.1798	.8644	.2338	.6032	.9725	.3419	.7112
172	.0722	.7569	.4416	.1263	.8110	.4956	.1803	.8650	.2344	.6038	.9732	.3425	.7119
421175	69.0727	70.7574	72.4421	74.1268	75.8115	77.4962	79.1809	80.8656	84.2350	87.6044	90.9738	94.3432	97.7126
178	.0732	.7579	.4426	.1273	.8120	.4968	.1815	.8662	.2356	.6050	.9744	.3439	.7133
181	.0737	.7584	.4431	.1279	.8126	.4973	.1820	.8668	.2362	.6056	.9751	.3445	.7140
184	.0742	.7589	.4436	.1284	.8131	.4979	.1826	.8673	.2368	.6063	.9757	.3452	.7147
187	.0747	.7594	.4442	.1289	.8137	.4984	.1832	.8679	.2374	.6069	.9764	.3459	.7154
421190	69.0752	70.7599	72.4447	74.1294	75.8142	77.4990	79.1837	80.8685	84.2380	87.6075	90.9770	94.3466	97.7161
193	.0757	.7604	.4452	.1300	.8147	.4995	.1843	.8691	.2386	.6081	.9777	.3472	.7168
196	.0761	.7609	.4457	.1305	.8153	.5001	.1848	.8696	.2392	.6088	.9783	.3479	.7175
199	.0766	.7614	.4462	.1310	.8158	.5006	.1854	.8702	.2398	.6094	.9790	.3486	.7182
202	.0771	.7619	.4467	.1316	.8164	.5012	.1860	.8708	.2404	.6100	.9796	.3492	.7189
421205	69.0776	70.7624	72.4473	74.1321	75.8169	77.5017	79.1865	80.8714	84.2410	87.6106	90.9803	94.3499	97.7196
208	.0781	.7629	.4478	.1326	.8174	.5023	.1871	.8719	.2416	.6113	.9809	.3506	.7203
211	.0786	.7634	.4483	.1331	.8180	.5028	.1877	.8725	.2422	.6119	.9816	.3513	.7210
214	.0791	.7640	.4488	.1337	.8185	.5034	.1882	.8731	.2428	.6125	.9822	.3519	.7216
217	.0796	.7645	.4493	.1342	.8191	.5039	.1888	.8737	.2434	.6131	.9829	.3526	.7223
421220	69.0801	70.7650	72.4498	74.1347	75.8196	77.5045	79.1894	80.8742	84.2440	87.6138	90.9835	94.3533	97.7230
223	.0806	.7655	.4504	.1352	.8201	.5050	.1899	.8748	.2446	.6144	.9842	.3540	.7237
226	.0811	.7660	.4509	.1358	.8207	.5056	.1905	.8754	.2452	.6150	.9848	.3546	.7244
229	.0816	.7665	.4514	.1363	.8212	.5061	.1911	.8760	.2458	.6156	.9855	.3553	.7251
232	.0820	.7670	.4519	.1368	.8218	.5067	.1916	.8765	.2464	.6163	.9861	.3560	.7258
421235	69.0825	70.7675	72.4524	74.1374	75.8223	77.5072	79.1922	80.8771	84.2470	87.6169	90.9868	94.3566	97.7265
238	.0830	.7680	.4529	.1379	.8228	.5078	.1927	.8777	.2476	.6175	.9874	.3573	.7272
241	.0835	.7685	.4535	.1384	.8234	.5083	.1933	.8783	.2482	.6181	.9881	.3580	.7279
244	.0840	.7690	.4540	.1389	.8239	.5089	.1939	.8788	.2488	.6188	.9887	.3587	.7286
247	.0845	.7695	.4545	.1395	.8245	.5094	.1944	.8794	.2494	.6194	.9894	.3593	.7293
421250	69.0850	70.7700	72.4550	74.1400	75.8250	77.5100	79.1950	80.8800	84.2500	87.6200	90.9900	94.3600	97.7300
253	.0855	.7705	.4555	.1405	.8255	.5106	.1956	.8806	.2506	.6206	.9906	.3607	.7307
256	.0860	.7710	.4560	.1411	.8261	.5111	.1961	.8812	.2512	.6212	.9913	.3613	.7314
259	.0865	.7715	.4565	.1416	.8266	.5117	.1967	.8817	.2518	.6219	.9919	.3620	.7321
262	.0870	.7720	.4571	.1421	.8272	.5122	.1973	.8823	.2524	.6225	.9926	.3627	.7328
421265	69.0875	70.7725	72.4576	74.1426	75.8277	77.5128	79.1978	80.8829	84.2530	87.6231	90.9932	94.3634	97.7335
268	.0880	.7730	.4581	.1432	.8282	.5133	.1984	.8835	.2536	.6237	.9939	.3640	.7342
271	.0884	.7735	.4586	.1437	.8288	.5139	.1989	.8840	.2542	.6244	.9945	.3647	.7349
274	.0889	.7740	.4591	.1442	.8293	.5144	.1995	.8846	.2548	.6250	.9952	.3654	.7356
277	.0894	.7745	.4596	.1448	.8299	.5150	.2001	.8852	.2554	.6256	.9958	.3660	.7363
421280	69.0899	70.7750	72.4602	74.1453	75.8304	77.5155	79.2006	80.8858	84.2560	87.6262	90.9965	94.3667	97.7370
283	.0904	.7755	.4607	.1458	.8309	.5161	.2012	.8863	.2566	.6269	.9971	.3674	.7377
286	.0909	.7760	.4612	.1463	.8315	.5166	.2018	.8869	.2572	.6275	.9978	.3681	.7384
289	.0914	.7766	.4617	.1469	.8320	.5172	.2023	.8875	.2578	.6281	.9984	.3687	.7390
292	.0919	.7771	.4622	.1474	.8326	.5177	.2029	.8881	.2584	.6287	.9991	.3694	.7397
421295	69.0924	70.7776	72.4627	74.1479	75.8331	77.5183	79.2035	80.8886	84.2590	87.6297	90.9997	94.3701	97.7404
298	.0929	.7781	.4633	.1484	.8336	.5188	.2040	.8892	.2596	.6300	91.0004	.3708	.7411
301	.0934	.7786	.4638	.1490	.8342	.5194	.2046	.8898	.2602	.6306	.0010	.3714	.7418
304	.0939	.7791	.4643	.1495	.8347	.5199	.2052	.8904	.2608	.6312	.0017	.3721	.7425
307	.0943	.7796	.4648	.1500	.8353	.5205	.2057	.8909	.2614	.6319	.0023	.3728	.7432
421310	69.0948	70.7801	72.4653	74.1506	75.8358	77.5210	79.2063	80.8915	84.2620	87.6325	91.0030	94.3734	97.7439
313	.0953	.7806	.4658	.1511	.8363	.5216	.2068	.8921	.2626	.6331	.0036	.3741	.7446
316	.0958	.7811	.4664	.1516	.8369	.5221	.2074	.8927	.2632	.6337	.0043	.3748	.7453
319	.0963	.7816	.4669	.1521	.8374	.5227	.2080	.8932	.2638	.6344	.0049	.3755	.7460
322	.0968	.7821	.4674	.1527	.8380	.5232	.2085	.8938	.2644	.6350	.0056	.3761	.7467
421325	69.0973	70.7826	72.4679	74.1532	75.8385	77.5238	79.2091	80.8944	84.2650	87.6356	91.0062	94.3768	97.7474
328	.0978	.7831	.4684	.1537	.8390	.5244	.2097	.8950	.2656	.6362	.0068	.3775	.7481
331	.0983	.7836	.4689	.1543	.8396	.5249	.2102	.8956	.2662	.6368	.0075	.3781	.7488
334	.0988	.7841	.4694	.1548	.8401	.5255	.2108	.8961	.2668	.6375	.0081	.3788	.7495
337	.0993	.7846	.4700	.1553	.8407	.5260	.2114	.8967	.2674	.6381	.0088	.3795	.7502
421340	69.0998	70.7851	72.4705	74.1558	75.8412	77.5266	79.2119	80.8973	84.2680	87.6387	91.0094	94.3802	97.7509
343	.1003	.7856	.4710	.1564	.8417	.5271	.2125	.8979	.2686	.6398	.0101	.3808	.7516
346	.1007	.7861	.4715	.1569	.8423	.5277	.2130	.8984	.2692	.6400	.0107	.3815	.7523
349	.1012	.7866	.4720	.1574	.8428	.5282	.2136	.8990	.2698	.6406	.0114	.3822	.7530
352	.1017	.7871	.4725	.1580	.8434	.5288	.2142	.8996	.2704	.6412	.0120	.3828	.7537
421355	69.1022	70.7876	72.4731	74.1585	75.8439	77.5293	79.2147	80.9002	84.2710	87.6418	91.0127	94.3835	97.7544
358	.1027	.7881	.4736	.1590	.8444	.5299	.2153	.9007	.2716	.6425	.0133	.3842	.7551
361	.1032	.7886	.4741	.1595	.8450	.5304	.2159	.9013	.2722	.6431	.0140	.3849	.7558
364	.1037	.7892	.4746	.1601	.8455	.5310	.2164	.9019	.2728	.6437	.0146	.3855	.7564
367	.1042	.7897	.4751	.1606	.8461	.5315	.2170	.9025	.2734	.6443	.0153	.3862	.7571
421370	69.1047	70.7902	72.4756	74.1611	75.8466	77.5321	79.2176	80.9030	84.2740	87.6450	91.0159	94.3869	97.7578
373	.1052	.7907	.4762	.1616	.8471	.5326	.2181	.9036	.2746	.6456	.0166	.3876	.7585
376	.1057	.7912	.4767	.1622	.8477	.5332	.2187	.9042	.2752	.6462	.0172	.3882	.7592
379	.1062	.7917	.4772	.1627	.8482	.5337	.2193	.9048	.2758	.6468	.0179	.3889	.7599
382	.1066	.7922	.4777	.1632	.8488	.5343	.2198	.9053	.2764	.6475	.0185	.3896	.7606
421385	69.1071	70.7927	72.4782	74.1638	75.8493	77.5348	79.2204	80.9059	84.2770	87.6481	91.0192	94.3902	97.7613
388	.1076	.7932	.4787	.1643	.8498	.5354	.2209	.9065	.2776	.6487	.0198	.3909	.7620
391	.1081	.7937	.4793	.1648	.8504	.5359	.2215	.9071	.2782	.6493	.0205	.3916	.7627
394	.1086	.7942	.4798	.1653	.8509	.5365	.2221	.9076	.2788	.6500	.0211	.3923	.7634
397	.1091	.7947	.4803	.1659	.8515	.5370	.2226	.9082	.2794	.6506	.0218	.3929	.7641
421400	69.1096	70.7952	72.4808	74.1664	75.8520	77.5376	79.2232	80.9088	84.2800	87.6512	91.0224	94.3936	97.7648

MEGACYCLES PER SECOND

HARMONICS

BASIC FREQ.	112	116	120	124	128	132	136	140	144	148	152	156	160
421400	47.1968	48.8824	50.5680	52.2536	53.9392	55.6248	57.3104	58.9960	60.6816	62.3672	64.0528	65.7384	67.4240
403	.1971	.8827	.5684	.2540	.9396	.6252	.3108	.9964	.6820	.3676	.0533	.7389	.4245
406	.1975	.8831	.5687	.2543	.9400	.6256	.3112	.9968	.6825	.3681	.0537	.7393	.4250
409	.1978	.8834	.5691	.2547	.9404	.6260	.3116	.9973	.6829	.3685	.0542	.7398	.4254
412	.1981	.8838	.5694	.2551	.9407	.6264	.3120	.9977	.6833	.3690	.0546	.7403	.4259
421415	47.1985	48.8841	50.5698	52.2555	53.9411	55.6268	57.3124	58.9981	60.6838	62.3694	64.0551	65.7407	67.4264
418	.1988	.8845	.5702	.2558	.9415	.6272	.3128	.9985	.6842	.3699	.0555	.7412	.4269
421	.1992	.8848	.5705	.2562	.9419	.6276	.3133	.9989	.6846	.3703	.0560	.7417	.4274
424	.1995	.8852	.5709	.2566	.9423	.6280	.3137	.9994	.6851	.3708	.0564	.7421	.4278
427	.1998	.8855	.5712	.2569	.9427	.6284	.3141	.9998	.6855	.3712	.0569	.7426	.4283
421430	47.2002	48.8859	50.5716	52.2573	53.9430	55.6288	57.3145	59.0002	60.6859	62.3716	64.0574	65.7431	67.4288
433	.2005	.8862	.5720	.2577	.9434	.6292	.3149	.0006	.6864	.3721	.0578	.7435	.4293
436	.2008	.8866	.5723	.2581	.9438	.6296	.3153	.0010	.6868	.3725	.0583	.7440	.4298
439	.2012	.8869	.5727	.2584	.9442	.6299	.3157	.0015	.6872	.3730	.0587	.7445	.4302
442	.2015	.8873	.5730	.2588	.9446	.6303	.3161	.0019	.6876	.3734	.0592	.7450	.4307
421445	47.2018	48.8876	50.5734	52.2592	53.9450	55.6307	57.3165	59.0023	60.6881	62.3739	64.0596	65.7454	67.4312
448	.2022	.8880	.5738	.2596	.9453	.6311	.3169	.0027	.6885	.3743	.0601	.7459	.4317
451	.2025	.8883	.5741	.2599	.9457	.6315	.3173	.0031	.6889	.3747	.0606	.7464	.4322
454	.2028	.8887	.5745	.2603	.9461	.6319	.3177	.0036	.6894	.3752	.0610	.7468	.4326
457	.2032	.8890	.5748	.2607	.9465	.6323	.3182	.0040	.6898	.3756	.0615	.7473	.4331
421460	47.2035	48.8894	50.5752	52.2610	53.9469	55.6327	57.3186	59.0044	60.6902	62.3761	64.0619	65.7478	67.4336
463	.2039	.8897	.5756	.2614	.9473	.6331	.3190	.0048	.6907	.3765	.0624	.7482	.4341
466	.2042	.8901	.5759	.2618	.9476	.6335	.3194	.0052	.6911	3770	0628	7487	4346
469	2045	8904	5763	2622	9480	6339	3198	0057	6915	3774	0633	7492	4350
472	.2049	.8908	.5766	.2625	.9484	.6343	.3202	.0061	.6920	.3779	.0637	.7496	.4355
421475	47.2052	48.8911	50.5770	52.2629	53.9488	55.6347	57.3206	59.0065	60.6924	62.3783	64.0642	65.7501	67.4360
478	.2055	.8914	.5774	.2633	.9492	.6351	.3210	.0069	.6928	.3787	.0647	.7506	.4365
481	.2059	.8918	.5777	.2636	.9496	.6355	.3214	.0073	.6933	.3792	.0651	.7510	.4370
484	.2062	.8921	.5781	.2640	.9500	.6359	.3218	.0078	.6937	.3796	.0656	.7515	.4374
487	.2065	.8925	.5784	.2644	.9503	.6363	.3222	.0082	.6941	.3801	.0660	.7520	.4379
421490	47.2069	48.8928	50.5788	52.2648	53.9507	55.6367	57.3226	59.0086	60.6946	62.3805	64.0665	65.7524	67.4384
493	.2072	.8932	.5792	.2651	.9511	.6371	.3230	.0090	.6950	.3810	.0669	.7529	.4389
496	.2076	.8935	.5795	.2655	9515	6375	3235	0094	6954	3814	0674	7534	4394
499	2079	8939	5799	2659	9519	.6379	.3239	.0099	.6959	.3819	.0678	.7538	.4398
502	.2082	.8942	.5802	.2662	.9523	6383	3243	0103	6963	3823	0683	7543	4403
421505	47 2086	48 8946	50 5806	52 2666	53 9526	55 6387	57 3247	59 0107	60 6967	62 3827	64 0688	65 7548	67 4408
508	2089	8949	.5810	.2670	.9530	.6391	.3251	.0111	.6972	.3832	.0692	.7552	.4413
511	.2092	.8953	.5813	.2674	.9534	.6395	.3255	.0115	.6976	.3836	.0697	.7557	.4418
514	.2096	.8956	.5817	.2677	.9538	.6398	.3259	.0120	.6980	.3841	.0701	.7562	.4422
517	.2099	.8960	.5820	.2681	.9542	.6402	.3263	.0124	.6984	.3845	.0706	.7567	.4427
421520	47.2102	48.8963	50.5824	52.2685	53.9546	55.6406	57.3267	59.0128	60.6989	62.3850	64.0710	65.7571	67.4432
523	.2106	.8967	.5828	.2689	.9549	.6410	.3271	.0132	.6993	.3854	.0715	.7576	.4437
526	.2109	.8970	.5831	.2692	.9553	.6414	.3275	.0136	.6997	.3858	.0720	.7581	.4442
529	.2112	.8974	.5835	.2696	.9557	.6418	.3279	.0141	.7002	.3863	.0724	.7585	.4446
532	.2116	.8977	.5838	.2700	.9561	.6422	.3284	.0145	.7006	.3867	.0729	.7590	.4451
421535	47.2119	48.8981	50.5842	52.2703	53.9565	55.6426	57.3288	59.0149	60.7010	62.3872	64.0733	65.7595	67.4456
538	.2123	.8984	.5846	.2707	.9569	.6430	.3292	.0153	.7015	.3876	.0738	.7599	.4461
541	.2126	.8988	.5849	.2711	.9572	.6434	.3296	.0157	.7019	.3881	.0742	.7604	.4466
544	.2129	.8991	.5853	.2715	.9576	.6438	.3300	.0162	.7023	.3885	.0747	.7609	.4470
547	.2133	.8995	.5856	.2718	.9580	.6442	.3304	.0166	.7028	.3890	.0751	.7613	.4475
421550	47.2136	48.8998	50.5860	52.2722	53.9584	55.6446	57.3308	59.0170	60.7032	62.3894	64.0756	65.7618	67.4480
553	.2139	.9001	.5864	.2726	.9588	.6450	.3312	.0174	.7036	.3898	.0761	.7623	.4485
556	.2143	.9005	.5867	.2729	.9592	.6454	.3316	.0178	.7041	.3903	.0765	.7627	.4490
559	.2146	.9008	.5871	.2733	.9596	.6458	.3320	.0183	.7045	.3907	.0770	.7632	.4494
562	.2149	.9012	.5874	.2737	.9599	.6462	.3324	.0187	.7049	.3912	.0774	.7637	.4499
421565	47.2153	48.9015	50.5878	52.2741	53.9603	55.6466	57.3328	59.0191	60.7054	62.3916	64.0779	65.7641	67.4504
568	.2156	.9019	.5882	.2744	.9607	.6470	.3332	.0195	.7058	.3921	.0783	.7646	.4509
571	.2160	.9022	.5885	.2748	.9611	.6474	.3337	.0199	.7062	.3925	.0788	.7651	.4514
574	.2163	.9026	.5889	.2752	.9615	.6478	.3341	.0204	.7067	.3930	.0792	.7655	.4518
577	.2166	.9029	.5892	.2755	.9619	.6482	.3345	.0208	.7071	.3934	.0797	.7660	.4523
421580	47.2170	48.9033	50.5896	52.2759	53.9622	55.6486	57.3349	59.0212	60.7075	62.3938	64.0802	65.7665	67.4528
583	.2173	.9036	.5900	.2763	.9626	.6490	.3353	.0216	.7080	.3943	.0806	.7669	.4533
586	.2176	.9040	.5903	.2767	.9630	.6494	.3357	.0220	.7084	.3947	.0811	.7674	.4538
589	.2180	.9043	.5907	.2770	.9634	.6497	.3361	.0225	.7088	.3952	.0815	.7679	.4542
592	.2183	.9047	.5910	.2774	.9638	.6501	.3365	.0229	.7092	.3956	.0820	.7684	.4547
421595	47.2186	48.9050	50.5914	52.2778	53.9642	55.6505	57.3369	59.0233	60.7097	62.3961	64.0824	65.7688	67.4552
598	.2190	.9054	.5918	.2782	.9645	.6509	.3373	.0237	.7101	.3965	.0829	.7693	.4557
601	.2193	.9057	.5921	.2785	.9649	.6513	.3377	.0241	.7105	.3969	.0834	.7698	.4562
604	.2196	.9061	.5925	.2789	.9653	.6517	.3381	.0246	.7110	.3974	.0838	.7702	.4566
607	.2200	.9064	.5928	.2793	.9657	.6521	.3386	.0250	.7114	.3978	.0843	.7707	.4571
421610	47.2203	48.9068	50.5932	52.2796	53.9661	55.6525	57.3390	59.0254	60.7118	62.3983	64.0847	65.7712	67.4576
613	.2207	.9071	.5936	.2800	.9665	.6529	.3394	.0258	.7123	.3987	.0852	.7716	.4581
616	.2210	.9075	.5939	.2804	.9668	.6533	.3398	.0262	.7127	.3992	.0856	.7721	.4586
619	.2213	.9078	.5943	.2808	.9672	.6537	.3402	.0267	.7131	.3996	.0861	.7726	.4590
622	.2217	.9082	.5946	.2811	.9676	.6541	.3406	.0271	.7136	.4001	.0865	.7730	.4595
421625	47.2220	48.9085	50.5950	52.2815	53.9680	55.6545	57.3410	59.0275	60.7140	62.4005	64.0870	65.7735	67.4600
628	.2223	.9088	.5954	.2819	.9684	.6549	.3414	.0279	.7144	.4009	.0875	.7740	.4605
631	.2227	.9092	.5957	.2822	.9688	.6553	.3418	.0283	.7149	.4014	.0879	.7744	.4610
634	.2230	.9095	.5961	.2826	.9692	.6557	.3422	.0288	.7153	.4018	.0884	.7749	.4614
637	.2233	.9099	.5964	.2830	.9695	.6561	.3426	.0292	.7157	.4023	.0888	.7754	.4619
421640	47.2237	48.9102	50.5968	52.2834	53.9699	55.6565	57.3430	59.0296	60.7162	62.4027	64.0893	65.7758	67.4624
643	.2240	.9106	.5972	.2837	.9703	.6569	.3434	.0300	.7166	.4032	.0897	.7763	.4629
646	.2244	.9109	.5975	.2841	.9707	.6573	.3439	.0304	.7170	.4036	.0902	.7768	.4634
649	.2247	.9113	.5979	.2845	.9711	.6577	.3443	.0309	.7175	.4041	.0906	.7772	.4638
652	.2250	.9116	.5982	.2848	.9715	.6581	.3447	.0313	.7179	.4045	.0911	.7777	.4643
421655	47.2254	48.9120	50.5986	52.2852	53.9718	55.6585	57.3451	59.0317	60.7183	62.4049	64.0916	65.7782	67.4648
658	.2257	.9123	.5990	.2856	.9722	.6589	.3455	.0321	.7188	.4054	.0920	.7786	.4653
661	.2260	.9127	.5993	.2860	.9726	.6593	.3459	.0325	.7192	.4058	.0925	.7791	.4658
664	.2264	.9130	.5997	.2863	.9730	.6596	.3463	.0330	.7196	.4063	.0929	.7796	.4662
667	.2267	.9134	.6000	.2867	.9734	.6600	.3467	.0334	.7200	.4067	.0934	.7801	.4667
421670	47.2270	48.9137	50.6004	52.2871	53.9738	55.6604	57.3471	59.0338	60.7205	62.4072	64.0938	65.7805	67.4672
673	.2274	.9141	.6008	.2875	.9741	.6608	.3475	.0342	.7209	.4076	.0943	.7810	.4677
676	.2277	.9144	.6011	.2878	.9745	.6612	.3479	.0346	.7213	.4080	.0948	.7815	.4682
679	.2280	.9148	.6015	.2882	.9749	.6616	.3483	.0351	.7218	.4085	.0952	.7819	.4686
682	.2284	.9151	.6018	.2886	.9753	.6620	.3488	.0355	.7222	.4089	.0957	.7824	.4691
421685	47.2287	48.9155	50.6022	52.2889	53.9757	55.6624	57.3492	59.0359	60.7226	62.4094	64.0961	65.7829	67.4696
688	.2291	.9158	.6026	.2893	.9761	.6628	.3496	.0363	.7231	.4098	.0966	.7833	.4701
691	.2294	.9162	.6029	.2897	.9764	.6632	.3500	.0367	.7235	.4103	.0970	.7838	.4706
694	.2297	.9165	.6033	.2901	.9768	.6636	.3504	.0372	.7239	.4107	.0975	.7843	.4710
697	.2301	.9169	.6036	.2904	.9772	.6640	.3508	.0376	.7244	.4112	.0979	.7847	.4715
421700	47.2304	48.9172	50.6040	52.2908	53.9776	55.6644	57.3512	59.0380	60.7248	62.4116	64.0984	65.7852	67.4720

MEGACYCLES PER SECOND

HARMONICS

BASIC FREQ.	164	168	172	176	180	184	188	192	200	208	216	224	232
421400	69.1096	70.7952	72.4808	74.1664	75.8520	77.5376	79.2232	80.9088	84.2800	87.6512	91.0224	94.3926	97.7648
403	.1101	.7957	.4813	.1669	.8525	.5382	.2238	.9094	.2806	.6518	.0230	.3943	.7655
406	.1106	.7962	.4818	.1675	.8531	.5387	.2243	.9100	.2812	.6524	.0237	.3949	.7662
409	.1111	.7967	.4823	.1680	.8536	.5393	.2249	.9105	.2818	.6531	.0243	.3956	.7669
412	.1116	.7972	.4829	.1685	.8542	.5398	.2255	.9111	.2824	.6537	.0250	.3963	.7676
421415	69.1121	70.7977	72.4834	74.1690	75.8547	77.5404	79.2260	80.9117	84.2830	87.6543	91.0256	94.3970	97.7683
418	.1126	.7982	.4839	.1696	.8552	.5409	.2266	.9123	.2836	.6549	.0263	.3976	.7690
421	.1130	.7987	.4844	.1701	.8558	.5415	.2271	.9128	.2842	.6556	.0269	.3983	.7697
424	.1135	.7992	.4849	.1706	.8563	.5420	.2277	.9134	.2848	.6562	.0276	.3990	.7704
427	.1140	.7997	.4854	.1712	.8569	.5426	.2283	.9140	.2854	.6568	.0282	.3996	.7711
421430	69.1145	70.8002	72.4860	74.1717	75.8574	77.5431	79.2288	80.9146	84.2860	87.6574	91.0289	94.4003	97.7718
433	.1150	.8007	.4865	.1722	.8579	.5437	.2294	.9151	.2866	.6581	.0295	.4010	.7725
436	.1155	.8012	.4870	.1727	.8585	.5442	.2300	.9157	.2872	.6587	.0302	.4017	.7732
439	.1160	.8018	.4875	.1733	.8590	.5448	.2305	.9163	.2878	.6593	.0308	.4023	.7738
442	.1165	.8023	.4880	.1738	.8596	.5453	.2311	.9169	.2884	.6599	.0315	.4030	.7745
421445	69.1170	70.8028	72.4885	74.1743	75.8601	77.5459	79.2317	80.9174	84.2890	87.6606	91.0321	94.4037	97.7752
448	.1175	.8033	.4891	.1748	.8606	.5464	.2322	.9180	.2896	.6612	.0328	.4044	.7759
451	.1180	.8038	.4896	.1754	.8612	.5470	.2328	.9186	.2902	.6618	.0334	.4050	.7766
454	.1185	.8043	.4901	.1759	.8617	.5475	.2334	.9192	.2908	.6624	.0341	.4057	.7773
457	.1189	.8048	.4906	.1764	.8623	.5481	.2339	.9197	.2914	.6631	.0347	.4064	.7780
421460	69.1194	70.8053	72.4911	74.1770	75.8628	77.5486	79.2345	80.9203	84.2920	87.6637	91.0354	94.4070	97.7787
463	.1199	.8058	.4916	.1775	.8633	.5492	.2350	.9209	.2926	.6643	.0360	.4077	.7794
466	.1204	.8063	.4922	.1780	.8639	.5497	.2356	.9215	.2932	.6649	.0367	.4084	.7801
469	.1209	.8068	.4927	.1785	.8644	.5503	.2362	.9220	.2938	.6656	.0373	.4091	.7808
472	.1214	.8073	.4932	.1791	.8650	.5508	.2367	.9226	.2944	.6662	.0380	.4097	.7815
421475	69.1219	70.8078	72.4937	74.1796	75.8655	77.5514	79.2373	80.9232	84.2950	87.6668	91.0386	94.4104	97.7822
478	.1224	.8083	.4942	.1801	.8660	.5520	.2379	.9238	.2956	.6674	.0392	.4111	.7829
481	.1229	.8088	.4947	.1807	.8666	.5525	.2384	.9244	.2962	.6680	.0399	.4117	.7836
484	.1234	.8093	.4952	.1812	.8671	.5531	.2390	.9249	.2968	.6687	.0405	.4124	.7843
487	.1239	.8098	.4958	.1817	.8677	.5536	.2396	.9255	.2974	.6693	.0412	.4131	.7850
421490	69.1244	70.8103	72.4963	74.1822	75.8682	77.5542	79.2401	80.9261	84.2980	87.6699	91.0418	94.4138	97.7857
493	.1249	.8108	.4968	.1828	.8687	.5547	.2407	.9267	.2986	.6705	.0425	.4144	.7864
496	.1253	.8113	.4973	.1833	.8693	.5553	.2412	.9272	.2992	.6712	.0431	.4151	.7871
499	.1258	.8118	.4978	.1838	.8698	.5558	.2418	.9278	.2998	.6718	.0438	.4158	.7878
502	.1263	.8123	.4983	.1844	.8704	.5564	.2424	.9284	.3004	.6724	.0444	.4164	.7885
421505	69.1268	70.8128	72.4989	74.1849	75.8709	77.5569	79.2429	80.9290	84.3010	87.6730	91.0451	94.4171	97.7892
508	.1273	.8133	.4994	.1854	.8714	.5575	.2435	.9295	.3016	.6737	.0457	.4178	.7899
511	.1278	.8138	.4999	.1859	.8720	.5580	.2441	.9301	.3022	.6743	.0464	.4185	.7906
514	.1283	.8144	.5004	.1865	.8725	.5586	.2446	.9307	.3028	.6749	.0470	.4191	.7912
517	.1288	.8149	.5009	.1870	.8731	.5591	.2452	.9313	.3034	.6755	.0477	.4198	.7919
421520	69.1293	70.8154	72.5014	74.1875	75.8736	77.5597	79.2458	80.9318	84.3040	87.6762	91.0483	94.4205	97.7926
523	.1298	.8159	.5020	.1880	.8741	.5602	.2463	.9324	.3046	.6768	.0490	.4212	.7933
526	.1303	.8164	.5025	.1886	.8747	.5608	.2469	.9330	.3052	.6774	.0496	.4218	.7940
529	.1308	.8169	.5030	.1891	.8752	.5613	.2475	.9336	.3058	.6780	.0503	.4225	.7947
532	.1312	.8174	.5035	.1896	.8758	.5619	.2480	.9341	.3064	.6787	.0509	.4232	.7954
421535	69.1317	70.8179	72.5040	74.1902	75.8763	77.5624	79.2486	80.9347	84.3070	87.6793	91.0516	94.4238	97.7961
538	.1322	.8184	.5045	.1907	.8768	.5630	.2491	.9353	.3076	.6799	.0522	.4245	.7968
541	.1327	.8189	.5051	.1912	.8774	.5635	.2497	.9359	.3082	.6805	.0529	.4252	.7975
544	.1332	.8194	.5056	.1917	.8779	.5641	.2503	.9364	.3088	.6812	.0535	.4259	.7982
547	.1337	.8199	.5061	.1923	.8785	.5646	.2508	.9370	.3094	.6818	.0542	.4265	.7989
421550	69.1342	70.8204	72.5066	74.1928	75.8790	77.5652	79.2514	80.9376	84.3100	87.6824	91.0548	94.4272	97.7996
553	.1347	.8209	.5071	.1933	.8795	.5658	.2520	.9382	.3106	.6830	.0554	.4279	.8003
556	.1352	.8214	.5076	.1939	.8801	.5663	.2525	.9388	.3112	.6836	.0561	.4285	.8010
559	.1357	.8219	.5081	.1944	.8806	.5669	.2531	.9393	.3118	.6843	.0567	.4292	.8017
562	.1362	.8224	.5087	.1949	.8812	.5674	.2537	.9399	.3124	.6849	.0574	.4299	.8024
421565	69.1367	70.8229	72.5092	74.1954	75.8817	77.5680	79.2542	80.9405	84.3130	87.6855	91.0580	94.4306	97.8031
568	.1372	.8234	.5097	.1960	.8822	.5685	.2548	.9411	.3136	.6861	.0587	.4312	.8038
571	.1376	.8239	.5102	.1965	.8828	.5691	.2553	.9416	.3142	.6868	.0593	.4319	.8045
574	.1381	.8244	.5107	.1970	.8833	.5696	.2559	.9422	.3148	.6874	.0600	.4326	.8052
577	.1386	.8249	.5112	.1976	.8839	.5702	.2565	.9428	.3154	.6880	.0606	.4332	.8059
421580	69.1391	70.8254	72.5118	74.1981	75.8844	77.5707	79.2570	80.9434	84.3160	87.6886	91.0613	94.4339	97.8066
583	.1396	.8259	.5123	.1986	.8849	.5713	.2576	.9439	.3166	.6893	.0619	.4346	.8073
586	.1401	.8264	.5128	.1991	.8855	.5718	.2582	.9445	.3172	.6899	.0626	.4353	.8080
589	.1406	.8270	.5133	.1997	.8860	.5724	.2587	.9451	.3178	.6905	.0632	.4359	.8086
592	.1411	.8275	.5138	.2002	.8866	.5729	.2593	.9457	.3184	.6911	.0639	.4366	.8093
421595	69.1416	70.8280	72.5143	74.2007	75.8871	77.5735	79.2599	80.9462	84.3190	87.6918	91.0645	94.4373	97.8100
598	.1421	.8285	.5149	.2012	.8876	.5740	.2604	.9468	.3196	.6924	.0652	.4380	.8107
601	.1426	.8290	.5154	.2018	.8882	.5746	.2610	.9474	.3202	.6930	.0658	.4386	.8114
604	.1431	.8295	.5159	.2023	.8887	.5751	.2616	.9480	.3208	.6936	.0665	.4393	.8121
607	.1435	.8300	.5164	.2028	.8893	.5757	.2621	.9485	.3214	.6943	.0671	.4400	.8128
421610	69.1440	70.8305	72.5169	74.2034	75.8898	77.5762	79.2627	80.9491	84.3220	87.6949	91.0678	94.4406	97.8135
613	.1445	.8310	.5174	.2039	.8903	.5768	.2632	.9497	.3226	.6955	.0684	.4413	.8142
616	.1450	.8315	.5180	.2044	.8909	.5773	.2638	.9503	.3232	.6961	.0691	.4420	.8149
619	.1455	.8320	.5185	.2049	.8914	.5779	.2644	.9508	.3238	.6968	.0697	.4427	.8156
622	.1460	.8325	.5190	.2055	.8920	.5784	.2649	.9514	.3244	.6974	.0704	.4433	.8163
421625	69.1465	70.8330	72.5195	74.2060	75.8925	77.5790	79.2655	80.9520	84.3250	87.6980	91.0710	94.4440	97.8170
628	.1470	.8335	.5200	.2065	.8930	.5796	.2661	.9526	.3256	.6986	.0716	.4447	.8177
631	.1475	.8340	.5205	.2071	.8936	.5801	.2666	.9532	.3262	.6992	.0723	.4453	.8184
634	.1480	.8345	.5210	.2076	.8941	.5807	.2672	.9537	.3268	.6999	.0729	.4460	.8191
637	.1485	.8350	.5216	.2081	.8947	.5812	.2678	.9543	.3274	.7005	.0736	.4467	.8198
421640	69.1490	70.8355	72.5221	74.2086	75.8952	77.5818	79.2683	80.9549	84.3280	87.7011	91.0742	94.4474	97.8205
643	.1495	.8360	.5226	.2092	.8957	.5823	.2689	.9555	.3286	.7017	.0749	.4480	.8212
646	.1499	.8365	.5231	.2097	.8963	.5829	.2694	.9560	.3292	.7024	.0755	.4487	.8219
649	.1504	.8370	.5236	.2102	.8968	.5834	.2700	.9566	.3298	.7030	.0762	.4494	.8226
652	.1509	.8375	.5241	.2108	.8974	.5840	.2706	.9572	.3304	.7036	.0768	.4500	.8233
421655	69.1514	70.8380	72.5247	74.2113	75.8979	77.5845	79.2711	80.9578	84.3310	87.7042	91.0775	94.4507	97.8240
658	.1519	.8385	.5252	.2118	.8984	.5851	.2717	.9583	.3316	.7049	.0781	.4514	.8247
661	.1524	.8390	.5257	.2123	.8990	.5856	.2723	.9589	.3322	.7055	.0788	.4521	.8254
664	.1529	.8396	.5262	.2129	.8995	.5862	.2728	.9595	.3328	.7061	.0794	.4527	.8260
667	.1534	.8401	.5267	.2134	.9001	.5867	.2734	.9601	.3334	.7067	.0801	.4534	.8267
421670	69.1539	70.8406	72.5272	74.2139	75.9006	77.5873	79.2740	80.9606	84.3340	87.7074	91.0807	94.4541	97.8274
673	.1544	.8411	.5278	.2144	.9011	.5878	.2745	.9612	.3346	.7080	.0814	.4548	.8281
676	.1549	.8416	.5283	.2150	.9017	.5884	.2751	.9618	.3352	.7086	.0820	.4554	.8288
679	.1554	.8421	.5288	.2155	.9022	.5889	.2757	.9624	.3358	.7092	.0827	.4561	.8295
682	.1558	.8426	.5293	.2160	.9028	.5895	.2762	.9629	.3364	.7099	.0833	.4568	.8302
421685	69.1563	70.8431	72.5298	74.2166	75.9033	77.5900	79.2768	80.9635	84.3370	87.7105	91.0840	94.4574	97.8309
688	.1568	.8436	.5303	.2171	.9038	.5906	.2773	.9641	.3376	.7111	.0846	.4581	.8316
691	.1573	.8441	.5309	.2176	.9044	.5911	.2779	.9647	.3382	.7117	.0853	.4588	.8323
694	.1578	.8446	.5314	.2181	.9049	.5917	.2785	.9652	.3388	.7124	.0859	.4595	.8330
697	.1583	.8451	.5319	.2187	.9055	.5922	.2790	.9658	.3394	.7130	.0866	.4601	.8337
421700	69.1588	70.8456	72.5324	74.2192	75.9060	77.5928	79.2796	80.9664	84.3400	87.7136	91.0872	94.4608	97.8344

MEGACYCLES PER SECOND

HARMONICS

BASIC FREQ.	112	116	120	124	128	132	136	140	144	148	152	156	160
421700	47.2304	48.9172	50.6040	52.2908	53.9776	55.6644	57.3512	59.0380	60.7248	62.4116	64.0984	65.7852	67.4720
703	.2307	.9175	.6044	.2912	.9780	.6648	.3516	.0384	.7252	.4120	.0989	.7857	.4725
706	.2311	.9179	.6047	.2915	.9784	.6652	.3520	.0388	.7257	.4125	.0993	.7861	.4730
709	.2314	.9182	.6051	.2919	.9788	.6656	.3524	.0393	.7261	.4129	.0998	.7866	.4734
712	.2317	.9186	.6054	.2923	.9791	.6660	.3528	.0397	.7265	.4134	.1002	.7871	.4739
421715	47.2321	48.9189	50.6058	52.2927	53.9795	55.6664	57.3532	59.0401	60.7270	62.4138	64.1007	65.7875	67.4744
718	.2324	.9193	.6062	.2930	.9799	.6668	.3536	.0405	.7274	.4143	.1011	.7880	.4749
721	.2328	.9196	.6065	.2934	.9803	.6672	.3541	.0409	.7278	.4147	.1016	.7885	.4754
724	.2331	.9200	.6069	.2938	.9807	.6676	.3545	.0414	.7283	.4152	.1020	.7889	.4758
727	.2334	.9203	.6072	.2941	.9811	.6680	.3549	.0418	.7287	.4156	.1025	.7894	.4763
421730	47.2338	48.9207	50.6076	52.2945	53.9814	55.6684	57.3553	59.0422	60.7291	62.4160	64.1030	65.7899	67.4768
733	.2341	.9210	.6080	.2949	.9818	.6688	.3557	.0426	.7296	.4165	.1034	.7903	.4773
736	.2344	.9214	.6083	.2953	.9822	.6692	.3561	.0430	.7300	.4169	.1039	.7908	.4778
739	.2348	.9217	.6087	.2956	.9826	.6695	.3565	.0435	.7304	.4174	.1043	.7913	.4782
742	.2351	.9221	.6090	.2960	.9830	.6699	.3569	.0439	.7308	.4178	.1048	.7918	.4787
421745	47.2354	48.9224	50.6094	52.2964	53.9834	55.6703	57.3573	59.0443	60.7313	62.4183	64.1052	65.7922	67.4792
748	.2358	.9228	.6098	.2968	.9837	.6707	.3577	.0447	.7317	.4187	.1057	.7927	.4797
751	.2361	.9231	.6101	.2971	.9841	.6711	.3581	.0451	.7321	.4191	.1062	.7932	.4802
754	.2364	.9235	.6105	.2975	.9845	.6715	.3585	.0456	.7326	.4196	.1066	.7936	.4806
757	.2368	.9238	.6108	.2979	.9849	.6719	.3590	.0460	.7330	.4200	.1071	.7941	.4811
421760	47.2371	48.9242	50.6112	52.2982	53.9853	55.6723	57.3594	59.0464	60.7334	62.4205	64.1075	65.7946	67.4816
763	.2375	.9245	.6116	.2986	.9857	.6727	.3598	.0468	.7339	.4209	.1080	.7950	.4821
766	.2378	.9249	.6119	.2990	.9860	.6731	.3602	.0472	.7343	.4214	.1084	.7955	.4826
769	.2381	.9252	.6123	.2994	.9864	.6735	.3606	.0477	.7347	.4218	.1089	.7960	.4830
772	.2385	.9256	.6126	.2997	.9868	.6739	.3610	.0481	.7352	.4223	.1093	.7964	.4835
421775	47.2388	48.9259	50.6130	52.3001	53.9872	55.6743	57.3614	59.0485	60.7356	62.4227	64.1098	65.7969	67.4840
778	.2391	.9262	.6134	.3005	.9876	.6747	.3618	.0489	.7360	.4231	.1103	.7974	.4845
781	.2395	.9266	.6137	.3008	.9880	.6751	.3622	.0493	.7365	.4236	.1107	.7978	.4850
784	.2398	.9269	.6141	.3012	.9884	.6755	.3626	.0498	.7369	.4240	.1112	.7983	.4854
787	.2401	.9273	.6144	.3016	.9887	.6759	.3630	.0502	.7373	.4245	.1116	.7988	.4859
421790	47.2405	48.9276	50.6148	52.3020	53.9891	55.6763	57.3634	59.0506	60.7378	62.4249	64.1121	65.7992	67.4864
793	.2408	.9280	.6152	.3023	.9895	.6767	.3638	.0510	.7382	.4254	.1125	.7997	.4869
796	.2412	.9283	.6155	.3027	.9899	.6771	.3643	.0514	.7386	.4258	.1130	.8002	.4874
799	.2415	.9287	.6159	.3031	.9903	.6775	.3647	.0519	.7391	.4263	.1134	.8006	.4878
802	.2418	.9290	.6162	.3034	.9907	.6779	.3651	.0523	.7395	.4267	.1139	.8011	.4883
421805	47.2422	48.9294	50.6166	52.3038	53.9910	55.6783	57.3655	59.0527	60.7399	62.4271	64.1144	65.8016	67.4888
808	.2425	.9297	.6170	.3042	.9914	.6787	.3659	.0531	.7404	.4276	.1148	.8020	.4893
811	.2428	.9301	.6173	.3046	.9918	.6791	.3663	.0535	.7408	.4280	.1153	.8025	.4898
814	.2432	.9304	.6177	.3049	.9922	.6794	.3667	.0540	.7412	.4285	.1157	.8030	.4902
817	.2435	.9308	.6180	.3053	.9926	.6798	.3671	.0544	.7416	.4289	.1162	.8035	.4907
421820	47.2438	48.9311	50.6184	52.3057	53.9930	55.6802	57.3675	59.0548	60.7421	62.4294	64.1166	65.8039	67.4912
823	.2442	.9315	.6188	.3061	.9933	.6806	.3679	.0552	.7425	.4298	.1171	.8044	.4917
826	.2445	.9318	.6191	.3064	.9937	.6810	.3683	.0556	.7429	.4302	.1176	.8049	.4922
829	.2448	.9322	.6195	.3068	.9941	.6814	.3687	.0561	.7434	.4307	.1180	.8053	.4926
832	.2452	.9325	.6198	.3072	.9945	.6818	.3692	.0565	.7438	.4311	.1185	.8058	.4931
421835	47.2455	48.9329	50.6202	52.3075	53.9949	55.6822	57.3696	59.0569	60.7442	62.4316	64.1189	65.8063	67.4936
838	.2459	.9332	.6206	.3079	.9953	.6826	.3700	.0573	.7447	.4320	.1194	.8067	.4941
841	.2462	.9336	.6209	.3083	.9956	.6830	.3704	.0577	.7451	.4325	.1198	.8072	.4946
844	.2465	.9339	.6213	.3087	.9960	.6834	.3708	.0582	.7455	.4329	.1203	.8077	.4950
847	.2469	.9343	.6216	.3090	.9964	.6838	.3712	.0586	.7460	.4334	.1207	.8081	.4955
421850	47.2472	48.9346	50.6220	52.3094	53.9968	55.6842	57.3716	59.0590	60.7464	62.4338	64.1212	65.8086	67.4960
853	.2475	.9349	.6224	.3098	.9972	.6846	.3720	.0594	.7468	.4342	.1217	.8091	.4965
856	.2479	.9353	.6227	.3101	.9976	.6850	.3724	.0598	.7473	.4347	.1221	.8095	.4970
859	.2482	.9356	.6231	.3105	.9980	.6854	.3728	.0603	.7477	.4351	.1226	.8100	.4974
862	.2485	.9360	.6234	.3109	.9983	.6858	.3732	.0607	.7481	.4356	.1230	.8105	.4979
421865	47.2489	48.9363	50.6238	52.3113	53.9987	55.6862	57.3736	59.0611	60.7486	62.4360	64.1235	65.8109	67.4984
868	.2492	.9367	.6242	.3116	.9991	.6866	.3740	.0615	.7490	.4365	.1239	.8114	.4989
871	.2496	.9370	.6245	.3120	.9995	.6870	.3745	.0619	.7494	.4369	.1244	.8119	.4994
874	.2499	.9374	.6249	.3124	.9999	.6874	.3749	.0624	.7499	.4374	.1248	.8123	.4998
877	.2502	.9377	.6252	.3127	54.0003	.6878	.3753	.0628	.7403	.4378	.1253	.8128	.5003
421880	47.2506	48.9381	50.6256	52.3131	54.0006	55.6882	57.3757	59.0632	60.7507	62.4382	64.1258	65.8133	67.5008
883	.2509	.9384	.6260	.3135	.0010	.6886	.3761	.0636	.7513	.4387	.1262	.8137	.5013
886	.2512	.9388	.6263	.3139	.0014	.6890	.3765	.0640	.7516	.4391	.1267	.8142	.5018
889	.2516	.9391	.6267	.3142	.0018	.6893	.3769	.0645	.7520	.4396	.1271	.8147	.5022
892	.2519	.9395	.6270	.3146	.0022	.6897	.3773	.0649	.7524	.4400	.1276	.8152	.5027
421895	47.2522	48.9398	50.6274	52.3150	54.0026	55.6901	57.3777	59.0653	60.7529	62.4405	64.1280	65.8156	67.5032
898	.2526	.9402	.6278	.3154	.0029	.6905	.3781	.0657	.7533	.4409	.1285	.8161	.5037
901	.2529	.9405	.6281	.3157	.0033	.6909	.3785	.0661	.7537	.4413	.1290	.8166	.5042
904	.2532	.9409	.6285	.3161	.0037	.6913	.3789	.0666	.7542	.4418	.1294	.8170	.5046
907	.2536	.9412	.6288	.3165	.0041	.6917	.3794	.0670	.7546	.4422	.1299	.8175	.5051
421910	47.2539	48.9416	50.6292	52.3168	54.0045	55.6921	57.3798	59.0674	60.7550	62.4427	64.1303	65.8180	67.5056
913	.2543	.9419	.6296	.3172	.0049	.6925	.3802	.0678	.7555	.4431	.1308	.8184	.5061
916	.2546	.9423	.6299	.3176	.0052	.6929	.3806	.0682	.7559	.4436	.1312	.8189	.5066
919	.2549	.9426	.6303	.3180	.0056	.6933	.3810	.0687	.7563	.4440	.1317	.8194	.5070
922	.2553	.9430	.6306	.3183	.0060	.6937	.3814	.0691	.7568	.4445	.1321	.8198	.5075
421925	47.2556	48.9433	50.6310	52.3187	54.0064	55.6941	57.3818	59.0695	60.7572	62.4449	64.1326	65.8203	67.5080
928	.2559	.9436	.6314	.3191	.0068	.6945	.3822	.0699	.7576	.4453	.1331	.8208	.5085
931	.2563	.9440	.6317	.3194	.0072	.6949	.3826	.0703	.7581	.4458	.1335	.8212	.5090
934	.2566	.9443	.6321	.3198	.0076	.6953	.3830	.0708	.7585	.4462	.1340	.8217	.5094
937	.2569	.9447	.6324	.3202	.0079	.6957	.3834	.0712	.7589	.4467	.1344	.8222	.5099
421940	47.2573	48.9450	50.6328	52.3206	54.0083	55.6961	57.3838	59.0716	60.7594	62.4471	64.1349	65.8226	67.5104
943	.2576	.9454	.6332	.3209	.0087	.6965	.3842	.0720	.7598	.4476	.1353	.8231	.5109
946	.2580	.9457	.6335	.3213	.0091	.6969	.3847	.0724	.7602	.4480	.1358	.8236	.5114
949	.2583	.9461	.6339	.3217	.0095	.6973	.3851	.0729	.7607	.4485	.1362	.8240	.5118
952	.2586	.9464	.6342	.3220	.0099	.6977	.3855	.0733	.7611	.4489	.1367	.8245	.5123
421955	47.2590	48.9468	50.6346	52.3224	54.0102	55.6981	57.3859	59.0737	60.7615	62.4493	64.1372	65.8250	67.5128
958	.2593	.9471	.6350	.3228	.0106	.6985	.3863	.0741	.7620	.4498	.1376	.8254	.5133
961	.2596	.9475	.6353	.3232	.0110	.6989	.3867	.0745	.7624	.4502	.1381	.8259	.5138
964	.2600	.9478	.6357	.3235	.0114	.6992	.3871	.0750	.7628	.4507	.1385	.8264	.5142
967	.2603	.9482	.6360	.3239	.0118	.6996	.3875	.0754	.7632	.4511	.1390	.8269	.5147
421970	47.2606	48.9485	50.6364	52.3243	54.0122	55.7000	57.3879	59.0758	60.7637	62.4516	64.1394	65.8273	67.5152
973	.2610	.9489	.6368	.3247	.0125	.7004	.3883	.0762	.7641	.4520	.1399	.8278	.5157
976	.2613	.9492	.6371	.3250	.0129	.7008	.3887	.0766	.7645	.4524	.1404	.8283	.5162
979	.2616	.9496	.6375	.3254	.0133	.7012	.3891	.0771	.7650	.4529	.1408	.8287	.5166
982	.2620	.9499	.6378	.3258	.0137	.7016	.3896	.0775	.7654	.4533	.1413	.8292	.5171
421985	47.2623	48.9503	50.6382	52.3261	54.0141	55.7020	57.3900	59.0779	60.7658	62.4538	64.1417	65.8297	67.5176
988	.2627	.9506	.6386	.3265	.0145	.7024	.3904	.0783	.7663	.4542	.1422	.8301	.5181
991	.2630	.9510	.6389	.3269	.0148	.7028	.3908	.0787	.7667	.4547	.1426	.8306	.5186
994	.2633	.9513	.6393	.3273	.0152	.7032	.3912	.0792	.7671	.4551	.1431	.8311	.5190
997	.2637	.9517	.6396	.3276	.0156	.7036	.3916	.0796	.7676	.4556	.1435	.8315	.5195
422000	47.2640	48.9520	50.6400	52.3280	54.0160	55.7040	57.3920	59.0800	60.7680	62.4560	64.1440	65.8320	67.5200

MEGACYCLES PER SECOND

H A R M O N I C S

BASIC FREQ.	164	168	172	176	180	184	188	192	200	208	216	224	232
421700	69.1588	70.8456	72.5324	74.2192	75.9060	77.5928	79.2796	80.9664	84.3400	87.7136	91.0872	94.4608	97.8344
703	.1593	.8461	.5329	.2197	.9065	.5934	.2802	.9670	.3406	.7142	.0878	.4615	.8351
706	.1598	.8466	.5334	.2203	.9071	.5939	.2807	.9676	.3412	.7148	.0885	.4621	.8358
709	.1603	.8471	.5339	.2208	.9076	.5945	.2813	.9681	.3418	.7155	.0891	.4628	.8365
712	.1608	.8476	.5345	.2213	.9082	.5950	.2819	.9687	.3424	.7161	.0898	.4635	.8372
421715	69.1613	70.8481	72.5350	74.2218	75.9087	77.5956	79.2824	80.9693	84.3430	87.7167	91.0904	94.4642	97.8379
718	.1618	.8486	.5355	.2224	.9092	.5961	.2830	.9699	.3436	.7173	.0911	.4648	.8386
721	.1622	.8491	.5360	.2229	.9098	.5967	.2835	.9704	.3442	.7180	.0917	.4655	.8393
724	.1627	.8496	.5365	.2234	.9103	.5972	.2841	.9710	.3448	.7186	.0924	.4662	.8400
727	.1632	.8501	.5370	.2240	.9109	.5978	.2847	.9716	.3454	.7192	.0930	.4668	.8407
421730	69.1637	70.8506	72.5376	74.2245	75.9114	77.5983	79.2852	80.9722	84.3460	87.7198	91.0937	94.4675	97.8414
733	.1642	.8511	.5381	.2250	.9119	.5989	.2858	.9727	.3466	.7205	.0943	.4682	.8421
736	.1647	.8516	.5386	.2255	.9125	.5994	.2864	.9733	.3472	.7211	.0950	.4689	.8428
739	.1652	.8522	.5391	.2261	.9130	.6000	.2869	.9739	.3478	.7217	.0956	.4695	.8434
742	.1657	.8527	.5396	.2266	.9136	.6005	.2875	.9745	.3484	.7223	.0963	.4702	.8441
421745	69.1662	70.8532	72.5401	74.2271	75.9141	77.6011	79.2881	80.9750	84.3490	87.7230	91.0969	94.4709	97.8448
748	.1667	.8537	.5407	.2276	.9146	.6016	.2886	.9756	.3496	.7236	.0976	.4716	.8455
751	.1672	.8542	.5412	.2282	.9152	.6022	.2892	.9762	.3502	.7242	.0982	.4722	.8462
754	.1677	.8547	.5417	.2287	.9157	.6027	.2898	.9768	.3508	.7248	.0989	.4729	.8469
757	.1681	.8552	.5422	.2292	.9163	.6033	.2903	.9773	.3514	.7255	.0995	.4736	.8476
421760	69.1686	70.8557	72.5427	74.2298	75.9168	77.6038	79.2909	80.9779	84.3520	87.7261	91.1002	94.4742	97.8483
763	.1691	.8562	.5432	.2303	.9173	.6044	.2914	.9785	.3526	.7267	.1008	.4749	.8490
766	.1696	.8567	.5438	.2308	.9179	.6049	.2920	.9791	.3532	.7273	.1015	.4756	.8497
769	.1701	.8572	.5443	.2313	.9184	.6055	.2926	.9796	.3538	.7280	.1021	.4763	.8504
772	.1706	.8577	.5448	.2319	.9190	.6060	.2931	.9802	.3544	.7286	.1028	.4769	.8511
421775	69.1711	70.8582	72.5453	74.2324	75.9195	77.6066	79.2937	80.9808	84.3550	87.7292	91.1034	94.4776	97.8518
778	.1716	.8587	.5458	.2329	.9200	.6072	.2943	.9814	.3556	.7298	.1040	.4783	.8525
781	.1721	.8592	.5463	.2335	.9206	.6077	.2948	.9820	.3562	.7304	.1047	.4789	.8532
784	.1726	.8597	.5468	.2340	.9211	.6083	.2954	.9825	.3568	.7311	.1053	.4796	.8539
787	.1731	.8602	.5474	.2345	.9217	.6088	.2960	.9831	.3574	.7317	.1060	.4803	.8546
421790	69.1736	70.8607	72.5479	74.2350	75.9222	77.6094	79.2965	80.9837	84.3580	87.7323	91.1066	94.4810	97.8553
793	.1741	.8612	.5484	.2356	.9227	.6099	.2971	.9843	.3586	.7329	.1073	.4816	.8560
796	.1745	.8617	.5489	.2361	.9233	.6105	.2976	.9848	.3592	.7336	.1079	.4823	.8567
799	.1750	.8622	.5494	.2366	.9238	.6110	.2982	.9854	.3598	.7342	.1086	.4830	.8574
802	.1755	.8627	.5499	.2372	.9244	.6116	.2988	.9860	.3604	.7348	.1092	.4836	.8581
421805	69.1760	70.8632	72.5505	74.2377	75.9249	77.6121	79.2993	80.9866	84.3610	87.7354	91.1099	94.4843	97.8588
808	.1765	.8637	.5510	.2382	.9254	.6127	.2999	.9871	.3616	.7361	.1105	.4850	.8595
811	.1770	.8642	.5515	.2387	.9260	.6132	.3005	.9877	.3622	.7367	.1112	.4857	.8602
814	.1775	.8648	.5520	.2393	.9265	.6138	.3010	.9883	.3628	.7373	.1118	.4863	.8608
817	.1780	.8653	.5525	.2398	.9271	.6143	.3016	.9889	.3634	.7379	.1125	.4870	.8615
421820	69.1785	70.8658	72.5530	74.2403	75.9276	77.6149	79.3022	80.9894	84.3640	87.7386	91.1131	94.4877	97.8622
823	.1790	.8663	.5536	.2408	.9281	.6154	.3027	.9900	.3646	.7392	.1138	.4884	.8629
826	.1795	.8668	.5541	.2414	.9287	.6160	.3033	.9906	.3652	.7398	.1144	.4890	.8636
829	.1800	.8673	.5546	.2419	.9292	.6165	.3039	.9912	.3658	.7404	.1151	.4897	.8643
832	.1804	.8678	.5551	.2424	.9298	.6171	.3044	.9917	.3664	.7411	.1157	.4904	.8650
421835	69.1809	70.8683	72.5556	74.2430	75.9303	77.6176	79.3050	80.9923	84.3670	87.7417	91.1164	94.4910	97.8657
838	.1814	.8688	.5561	.2435	.9308	.6182	.3055	.9929	.3676	.7423	.1170	.4917	.8664
841	.1819	.8693	.5567	.2440	.9314	.6187	.3061	.9935	.3682	.7429	.1177	.4924	.8671
844	.1824	.8698	.5572	.2445	.9319	.6193	.3067	.9940	.3688	.7436	.1183	.4931	.8678
847	.1829	.8703	.5577	.2451	.9325	.6198	.3072	.9946	.3694	.7442	.1190	.4937	.8685
421850	69.1834	70.8708	72.5582	74.2456	75.9330	77.6204	79.3078	80.9952	84.3700	87.7448	91.1196	94.4944	97.8692
853	.1839	.8713	.5587	.2461	.9335	.6210	.3084	.9958	.3706	.7454	.1202	.4951	.8699
856	.1844	.8718	.5592	.2467	.9341	.6215	.3089	.9964	.3712	.7460	.1209	.4957	.8706
859	.1849	.8723	.5597	.2472	.9346	.6221	.3095	.9969	.3718	.7467	.1215	.4964	.8713
862	.1854	.8728	.5603	.2477	.9352	.6226	.3101	.9975	.3724	.7473	.1222	.4971	.8720
421865	69.1859	70.8733	72.5608	74.2482	75.9357	77.6232	79.3106	80.9981	84.3730	87.7479	91.1228	94.4978	97.8727
868	.1864	.8738	.5613	.2488	.9362	.6237	.3112	.9987	.3736	.7485	.1235	.4984	.8734
871	.1868	.8743	.5618	.2493	.9368	.6243	.3117	.9992	.3742	.7492	.1241	.4991	.8741
874	.1873	.8748	.5623	.2498	.9373	.6248	.3123	.9998	.3748	.7498	.1248	.4998	.8748
877	.1878	.8753	.5628	.2504	.9379	.6254	.3129	81.0004	.3754	.7504	.1254	.5004	.8755
421880	69.1883	70.8758	72.5634	74.2509	75.9384	77.6259	79.3134	81.0010	84.3760	87.7510	91.1261	94.5011	97.8762
883	.1888	.8763	.5639	.2514	.9389	.6265	.3140	.0015	.3766	.7517	.1267	.5018	.8769
886	.1893	.8768	.5644	.2519	.9395	.6270	.3146	.0021	.3772	.7523	.1274	.5025	.8776
889	.1898	.8774	.5649	.2525	.9400	.6276	.3151	.0027	.3778	.7529	.1280	.5031	.8782
892	.1903	.8779	.5654	.2530	.9406	.6281	.3157	.0033	.3784	.7535	.1287	.5038	.8789
421895	69.1908	70.8784	72.5659	74.2535	75.9411	77.6287	79.3163	81.0038	84.3790	87.7542	91.1293	94.5045	97.8796
898	.1913	.8789	.5665	.2540	.9416	.6292	.3168	.0044	.3796	.7548	.1300	.5052	.8803
901	.1918	.8794	.5670	.2546	.9422	.6298	.3174	.0050	.3802	.7554	.1306	.5058	.8810
904	.1923	.8799	.5675	.2551	.9427	.6303	.3180	.0056	.3808	.7560	.1313	.5065	.8817
907	.1927	.8804	.5680	.2556	.9433	.6309	.3185	.0061	.3814	.7567	.1319	.5072	.8824
421910	69.1932	70.8809	72.5685	74.2562	75.9438	77.6314	79.3191	81.0067	84.3820	87.7573	91.1326	94.5078	97.8831
913	.1937	.8814	.5690	.2567	.9443	.6320	.3196	.0073	.3826	.7579	.1332	.5085	.8838
916	.1942	.8819	.5696	.2572	.9449	.6325	.3202	.0079	.3832	.7585	.1339	.5092	.8845
919	.1947	.8824	.5701	.2577	.9454	.6331	.3208	.0084	.3838	.7592	.1345	.5099	.8852
922	.1952	.8829	.5706	.2583	.9460	.6336	.3213	.0090	.3844	.7598	.1352	.5105	.8859
421925	69.1957	70.8834	72.5711	74.2588	75.9465	77.6342	79.3219	81.0096	84.3850	87.7604	91.1358	94.5112	97.8866
928	.1962	.8839	.5716	.2593	.9470	.6348	.3225	.0102	.3856	.7610	.1364	.5119	.8873
931	.1967	.8844	.5721	.2599	.9476	.6353	.3230	.0108	.3862	.7616	.1371	.5125	.8880
934	.1972	.8849	.5726	.2604	.9481	.6359	.3236	.0113	.3868	.7623	.1377	.5132	.8887
937	.1977	.8854	.5732	.2609	.9487	.6364	.3242	.0119	.3874	.7629	.1384	.5139	.8894
421940	69.1982	70.8859	72.5737	74.2614	75.9492	77.6370	79.3247	81.0125	84.3880	87.7635	91.1390	94.5146	97.8901
943	.1987	.8864	.5742	.2620	.9497	.6375	.3253	.0131	.3886	.7641	.1397	.5152	.8908
946	.1991	.8869	.5747	.2625	.9503	.6381	.3258	.0136	.3892	.7648	.1403	.5159	.8915
949	.1996	.8874	.5752	.2630	.9508	.6386	.3264	.0142	.3898	.7654	.1410	.5166	.8922
952	.2001	.8879	.5757	.2636	.9514	.6392	.3270	.0148	.3904	.7660	.1416	.5172	.8929
421955	69.2006	70.8884	72.5763	74.2641	75.9519	77.6397	79.3275	81.0154	84.3910	87.7666	91.1423	94.5179	97.8936
958	.2011	.8889	.5768	.2646	.9524	.6403	.3281	.0159	.3916	.7673	.1429	.5186	.8943
961	.2016	.8894	.5773	.2651	.9530	.6408	.3287	.0165	.3922	.7679	.1436	.5193	.8950
964	.2021	.8900	.5778	.2657	.9535	.6414	.3292	.0171	.3928	.7685	.1442	.5199	.8956
967	.2026	.8905	.5783	.2662	.9541	.6419	.3298	.0177	.3934	.7691	.1449	.5206	.8963
421970	69.2031	70.8910	72.5788	74.2667	75.9546	77.6425	79.3304	81.0182	84.3940	87.7698	91.1455	94.5213	97.8970
973	.2036	.8915	.5794	.2672	.9551	.6430	.3309	.0188	.3946	.7704	.1462	.5220	.8977
976	.2041	.8920	.5799	.2678	.9557	.6436	.3315	.0194	.3952	.7710	.1468	.5226	.8984
979	.2046	.8925	.5804	.2683	.9562	.6441	.3321	.0200	.3958	.7716	.1475	.5233	.8991
982	.2050	.8930	.5809	.2688	.9568	.6447	.3326	.0205	.3964	.7723	.1481	.5240	.8998
421985	69.2055	70.8935	72.5814	74.2694	75.9573	77.6452	79.3332	81.0211	84.3970	87.7729	91.1488	94.5246	97.9005
988	.2060	.8940	.5819	.2699	.9578	.6458	.3337	.0217	.3976	.7735	.1494	.5253	.9012
991	.2065	.8945	.5825	.2704	.9584	.6463	.3343	.0223	.3982	.7741	.1501	.5260	.9019
994	.2070	.8950	.5830	.2709	.9589	.6469	.3349	.0228	.3988	.7748	.1507	.5267	.9026
997	.2075	.8955	.5835	.2715	.9595	.6474	.3354	.0234	.3994	.7754	.1514	.5273	.9033
422000	69.2080	70.8960	72.5840	74.2720	75.9600	77.6480	79.3360	81.0240	84.4000	87.7760	91.1520	94.5280	97.9040

H A R M O N I C S

BASIC FREQ.	112	116	120	124	128	132	136	140	144	148	152	156	160
422000	47.2640	48.9520	50.6400	52.3280	54.0160	55.7040	57.3920	59.0800	60.7680	62.4560	64.1440	65.8320	67.5200
003	.2643	.9523	.6404	.3284	.0164	.7044	.3924	.0804	.7684	.4564	.1445	.8325	.5205
006	.2647	.9527	.6407	.3287	.0168	.7048	.3928	.0808	.7689	.4569	.1449	.8329	.5210
009	.2650	.9530	.6411	.3291	.0172	.7052	.3932	.0813	.7693	.4573	.1454	.8334	.5214
012	.2653	.9534	.6414	.3295	.0175	.7056	.3936	.0817	.7697	.4578	.1458	.8339	.5219
422015	47.2657	48.9537	50.6418	52.3299	54.0179	55.7060	57.3940	59.0821	60.7702	62.4582	64.1463	65.8343	67.5224
018	.2660	.9541	.6422	.3302	.0183	.7064	.3944	.0825	.7706	.4587	.1467	.8348	.5229
021	.2664	.9544	.6425	.3306	.0187	.7068	.3949	.0829	.7710	.4591	.1472	.8353	.5234
024	.2667	.9548	.6429	.3310	.0191	.7072	.3953	.0834	.7715	.4596	.1476	.8357	.5238
027	.2670	.9551	.6432	.3313	.0195	.7076	.3957	.0838	.7719	.4600	.1481	.8362	.5243
422030	47.2674	48.9555	50.6436	52.3317	54.0198	55.7080	57.3961	59.0842	60.7723	62.4604	64.1486	65.8367	67.5248
033	.2677	.9558	.6440	.3321	.0202	.7084	.3965	.0846	.7728	.4609	.1490	.8371	.5253
036	.2680	.9562	.6443	.3325	.0206	.7088	.3969	.0850	.7732	.4613	.1495	.8376	.5258
039	.2684	.9565	.6447	.3328	.0210	.7091	.3973	.0855	.7736	.4618	.1499	.8381	.5262
042	.2687	.9569	.6450	.3332	.0214	.7095	.3977	.0859	.7740	.4622	.1504	.8386	.5267
422045	47.2690	48.9572	50.6454	52.3336	54.0218	55.7099	57.3981	59.0863	60.7745	62.4627	64.1508	65.8390	67.5272
048	.2694	.9576	.6458	.3340	.0221	.7103	.3985	.0867	.7749	.4631	.1513	.8395	.5277
051	.2697	.9579	.6461	.3343	.0225	.7107	.3989	.0871	.7753	.4635	.1518	.8400	.5282
054	.2700	.9583	.6465	.3347	.0229	.7111	.3993	.0876	.7758	.4640	.1522	.8404	.5286
057	.2704	.9586	.6468	.3351	.0233	.7115	.3998	.0880	.7762	.4644	.1527	.8409	.5291
422060	47.2707	48.9590	50.6472	52.3354	54.0237	55.7119	57.4002	59.0884	60.7766	62.4649	64.1531	65.8414	67.5296
063	.2711	.9593	.6476	.3358	.0241	.7123	.4006	.0888	.7771	.4653	.1536	.8418	.5301
066	.2714	.9597	.6479	.3362	.0244	.7127	.4010	.0892	.7775	.4658	.1540	.8423	.5306
069	.2717	.9600	.6483	.3366	.0248	.7131	.4014	.0897	.7779	.4662	.1545	.8428	.5310
072	.2721	.9604	.6486	.3369	.0252	.7135	.4018	.0901	.7784	.4667	.1549	.8432	.5315
422075	47.2724	48.9607	50.6490	52.3373	54.0256	55.7139	57.4022	59.0905	60.7788	62.4671	64.1554	65.8437	67.5320
078	.2727	.9610	.6494	.3377	.0260	.7143	.4026	.0909	.7792	.4675	.1559	.8442	.5325
081	.2731	.9614	.6497	.3380	.0264	.7147	.4030	.0913	.7797	.4680	.1563	.8446	.5330
084	.2734	.9617	.6501	.3384	.0268	.7151	.4034	.0918	.7801	.4684	.1568	.8451	.5334
087	.2737	.9621	.6504	.3388	.0271	.7155	.4038	.0922	.7805	.4689	.1572	.8456	.5339
422090	47.2741	48.9624	50.6508	52.3392	54.0275	55.7159	57.4042	59.0926	60.7810	62.4693	64.1577	65.8460	67.5344
093	.2744	.9628	.6512	.3395	.0279	.7163	.4046	.0930	.7814	.4698	.1581	.8465	.5349
096	.2748	.9631	.6515	.3399	.0283	.7167	.4051	.0934	.7818	.4702	.1586	.8470	.5354
099	.2751	.9635	.6519	.3403	.0287	.7171	.4055	.0939	.7823	.4707	.1590	.8474	.5358
102	.2754	.9638	.6522	.3406	.0291	.7175	.4059	.0943	.7827	.4711	.1595	.8479	.5363
422105	47.2758	48.9642	50.6526	52.3410	54.0294	55.7179	57.4063	59.0947	60.7831	62.4715	64.1600	65.8484	67.5368
108	.2761	.9645	.6530	.3414	.0298	.7183	.4067	.0951	.7836	.4720	.1604	.8488	.5373
111	.2764	.9649	.6533	.3418	.0302	.7187	.4071	.0955	.7840	.4724	.1609	.8493	.5378
114	.2768	.0652	.6537	.3421	.0306	.7190	.4075	.0960	.7844	.4729	.1613	.8498	.5382
117	.2771	.9656	.6540	.3425	.0310	.7194	.4079	.0964	.7848	.4733	.1618	.8503	.5387
422120	47.2774	48.9659	50.6544	52.3429	54.0314	55.7198	57.4083	59.0968	60.7853	62.4738	64.1622	65.8507	67.5392
123	.2778	.9663	.6548	.3433	.0317	.7202	.4087	.0972	.7857	.4742	.1627	.8512	.5397
126	.2781	.9666	.6551	.3436	.0321	.7206	.4091	.0976	.7861	.4746	.1632	.8517	.5402
129	.2784	.9670	.6555	.3440	.0325	.7210	.4095	.0981	.7866	.4751	.1636	.8521	.5406
132	.2788	.9673	.6558	.3444	.0329	.7214	.4100	.0985	.7870	.4755	.1641	.8526	.5411
422135	47.2791	48.9677	50.6562	52.3447	54.0333	55.7218	57.4104	59.0989	60.7874	62.4760	64.1645	65.8531	67.5416
138	.2795	.9680	.6566	.3451	.0337	.7222	.4108	.0993	.7879	.4764	.1650	.8535	.5421
141	.2798	.9684	.6569	.3455	.0340	.7226	.4112	.0997	.7883	.4769	.1654	.8540	.5426
144	.2801	.9687	.6573	.3459	.0344	.7230	.4116	.1002	.7887	.4773	.1659	.8545	.5430
147	.2805	.9691	.6576	.3462	.0348	.7234	.4120	.1006	.7892	.4778	.1663	.8549	.5435
422150	47.2808	48.9694	50.6580	52.3466	54.0352	55.7238	57.4124	59.1010	60.7896	62.4782	64.1668	65.8554	67.5440
153	.2811	.9697	.6584	.3470	.0356	.7242	.4128	.1014	.7900	.4786	.1673	.8559	.5445
156	.2815	.9701	.6587	.3473	.0360	.7246	.4132	.1018	.7905	.4791	.1677	.8563	.5450
159	.2818	.9704	.6591	.3477	.0364	.7250	.4136	.1023	.7909	.4795	.1682	.8568	.5454
162	.2821	.9708	.6594	.3481	.0367	.7254	.4140	.1027	.7913	.4800	.1686	.8573	.5459
422165	47.2825	48.9711	50.6598	52.3485	54.0371	55.7258	57.4144	59.1031	60.7918	62.4804	64.1691	65.8577	67.5464
168	.2828	.9715	.6602	.3488	.0375	.7262	.4148	.1035	.7922	.4809	.1695	.8582	.5469
171	.2832	.9718	.6605	.3492	.0379	.7266	.4153	.1039	.7926	.4813	.1700	.8587	.5474
174	.2835	.9722	.6609	.3496	.0383	.7270	.4157	.1044	.7931	.4818	.1704	.8591	.5478
177	.2838	.9725	.6612	.3499	.0387	.7274	.4161	.1048	.7935	.4822	.1709	.8596	.5483
422180	47.2842	48.9729	50.6616	52.3503	54.0390	55.7278	57.4165	59.1052	60.7939	62.4826	64.1714	65.8601	67.5488
183	.2845	.9732	.6620	.3507	.0394	.7282	.4169	.1056	.7944	.4831	.1718	.8605	.5493
186	.2848	.9736	.6623	.3511	.0398	.7286	.4173	.1060	.7948	.4835	.1723	.8610	.5498
189	.2852	.9739	.6627	.3514	.0402	.7289	.4177	.1065	.7952	.4840	.1727	.8615	.5502
192	.2855	.9743	.6630	.3518	.0406	.7293	.4181	.1069	.7956	.4844	.1732	.8620	.5507
422195	47.2858	48.9746	50.6634	52.3522	54.0410	55.7297	57.4185	59.1073	60.7961	62.4849	64.1736	65.8624	67.5512
198	.2862	.9750	.6638	.3526	.0413	.7301	.4189	.1077	.7965	.4853	.1741	.8629	.5517
201	.2865	.9753	.6641	.3529	.0417	.7305	.4193	.1081	.7969	.4857	.1746	.8634	.5522
204	.2868	.9757	.6645	.3533	.0421	.7309	.4197	.1086	.7974	.4862	.1750	.8638	.5526
207	.2872	.9760	.6648	.3537	.0425	.7313	.4202	.1090	.7978	.4866	.1755	.8643	.5531
422210	47.2875	48.9764	50.6652	52.3540	54.0429	55.7317	57.4206	59.1094	60.7982	62.4871	64.1759	65.8648	67.5536
213	.2879	.9767	.6656	.3544	.0433	.7321	.4210	.1098	.7987	.4875	.1764	.8652	.5541
216	.2882	.9771	.6659	.3548	.0436	.7325	.4214	.1102	.7991	.4880	.1768	.8657	.5546
219	.2885	.9774	.6663	.3552	.0440	.7329	.4218	.1107	.7995	.4884	.1773	.8662	.5550
222	.2889	.9778	.6666	.3555	.0444	.7333	.4222	.1111	.8000	.4889	.1777	.8666	.5555
422225	47.2892	48.9781	50.6670	52.3559	54.0448	55.7337	57.4226	59.1115	60.8004	62.4893	64.1782	65.8671	67.5560
228	.2895	.9784	.6674	.3563	.0452	.7341	.4230	.1119	.8008	.4897	.1787	.8676	.5565
231	.2899	.9788	.6677	.3566	.0456	.7345	.4234	.1123	.8013	.4902	.1791	.8680	.5570
234	.2902	.9791	.6681	.3570	.0460	.7349	.4238	.1128	.8017	.4906	.1796	.8685	.5574
237	.2905	.9795	.6684	.3574	.0463	.7353	.4242	.1132	.8021	.4911	.1800	.8690	.5579
422240	47.2909	48.9798	50.6688	52.3578	54.0467	55.7357	57.4246	59.1136	60.8026	62.4915	64.1805	65.8694	67.5584
243	.2912	.9802	.6692	.3581	.0471	.7361	.4250	.1140	.8030	.4920	.1809	.8699	.5589
246	.2916	.9805	.6695	.3585	.0475	.7365	.4255	.1144	.8034	.4924	.1814	.8704	.5594
249	.2919	.9809	.6699	.3589	.0479	.7369	.4259	.1149	.8039	.4929	.1818	.8708	.5598
252	.2922	.9812	.6702	.3592	.0483	.7373	.4263	.1153	.8043	.4933	.1823	.8713	.5603
422255	47.2926	48.9816	50.6706	52.3596	54.0486	55.7377	57.4267	59.1157	60.8047	62.4937	64.1828	65.8718	67.5608
258	.2929	.9819	.6710	.3600	.0490	.7381	.4271	.1161	.8052	.4942	.1832	.8722	.5613
261	.2932	.9823	.6713	.3604	.0494	.7385	.4275	.1165	.8056	.4946	.1837	.8727	.5618
264	.2936	.9826	.6717	.3607	.0498	.7388	.4279	.1170	.8060	.4951	.1841	.8732	.5622
267	.2939	.9830	.6720	.3611	.0502	.7392	.4283	.1174	.8064	.4955	.1846	.8737	.5627
422270	47.2942	48.9833	50.6724	52.3615	54.0506	55.7396	57.4287	59.1178	60.8069	62.4960	64.1850	65.8741	67.5632
273	.2946	.9837	.6728	.3619	.0509	.7400	.4291	.1182	.8073	.4964	.1855	.8746	.5637
276	.2949	.9840	.6731	.3622	.0513	.7404	.4295	.1186	.8077	.4968	.1860	.8751	.5642
279	.2952	.9844	.6735	.3626	.0517	.7408	.4299	.1191	.8082	.4973	.1864	.8755	.5646
282	.2956	.9847	.6738	.3630	.0521	.7412	.4304	.1195	.8086	.4977	.1869	.8760	.5651
422285	47.2959	48.9851	50.6742	52.3633	54.0525	55.7416	57.4308	59.1199	60.8090	62.4982	64.1873	65.8765	67.5656
288	.2963	.9854	.6746	.3637	.0529	.7420	.4312	.1203	.8095	.4986	.1878	.8769	.5661
291	.2966	.9858	.6749	.3641	.0532	.7424	.4316	.1207	.8099	.4991	.1882	.8774	.5666
294	.2969	.9861	.6753	.3645	.0536	.7428	.4320	.1212	.8103	.4995	.1887	.8779	.5670
297	.2973	.9865	.6756	.3648	.0540	.7432	.4324	.1216	.8108	.5000	.1891	.8783	.5675
422300	47.2976	48.9868	50.6760	52.3652	54.0544	55.7436	57.4328	59.1220	60.8112	62.5004	64.1896	65.8788	67.5680

MEGACYCLES PER SECOND

H A R M O N I C S

BASIC FREQ.	164	168	172	176	180	184	188	192	200	208	216	224	232
422000	69.2080	70.8960	72.5840	74.2720	75.9600	77.6480	79.3360	81.0240	84.4000	87.7760	91.1520	94.5280	97.9040
003	.2085	.8965	.5845	.2725	.9605	.6486	.3366	.0246	.4006	.7766	.1526	.5287	.9047
006	.2090	.8970	.5850	.2731	.9611	.6491	.3371	.0252	.4012	.7772	.1533	.5293	.9054
009	.2095	.8975	.5855	.2736	.9616	.6497	.3377	.0257	.4018	.7779	.1539	.5300	.9061
012	.2100	.8980	.5861	.2741	.9622	.6502	.3383	.0263	.4024	.7785	.1546	.5307	.9068
422015	69.2105	70.8985	72.5866	74.2746	75.9627	77.6508	79.3388	81.0269	84.4030	87.7791	91.1552	94.5314	97.9075
018	.2110	.8990	.5871	.2752	.9632	.6513	.3394	.0275	.4036	.7797	.1559	.5320	.9082
021	.2114	.8995	.5876	.2757	.9638	.6519	.3399	.0280	.4042	.7804	.1565	.5327	.9089
024	.2119	.9000	.5881	.2762	.9643	.6524	.3405	.0286	.4048	.7810	.1572	.5334	.9096
027	.2124	.9005	.5886	.2768	.9649	.6530	.3411	.0292	.4054	.7816	.1578	.5340	.9103
422030	69.2129	70.9010	72.5892	74.2773	75.9654	77.6535	79.3416	81.0298	84.4060	87.7822	91.1585	94.5347	97.9110
033	.2134	.9015	.5897	.2778	.9659	.6541	.3422	.0303	.4066	.7829	.1591	.5354	.9117
036	.2139	.9020	.5902	.2783	.9665	.6546	.3428	.0309	.4072	.7835	.1598	.5361	.9124
039	.2144	.9026	.5907	.2789	.9670	.6552	.3433	.0315	.4078	.7841	.1604	.5367	.9130
042	.2149	.9031	.5912	.2794	.9676	.6557	.3439	.0321	.4084	.7847	.1611	.5374	.9137
422045	69.2154	70.9036	72.5917	74.2799	75.9681	77.6563	79.3445	81.0326	84.4090	87.7854	91.1617	94.5381	97.9144
048	.2159	.9041	.5923	.2804	.9686	.6568	.3450	.0332	.4096	.7860	.1624	.5388	.9151
051	.2164	.9046	.5928	.2810	.9692	.6574	.3456	.0338	.4102	.7866	.1630	.5394	.9158
054	.2169	.9051	.5933	.2815	.9697	.6579	.3462	.0344	.4108	.7872	.1637	.5401	.9165
057	.2173	.9056	.5938	.2820	.9703	.6585	.3467	.0349	.4114	.7879	.1643	.5408	.9172
422060	69.2178	70.9061	72.5943	74.2826	75.9708	77.6590	79.3473	81.0355	84.4120	87.7885	91.1650	94.5414	97.9179
063	.2183	.9066	.5948	.2831	.9713	.6596	.3478	.0361	.4126	.7891	.1656	.5421	.9186
066	.2188	.9071	.5954	.2836	.9719	.6601	.3484	.0367	.4132	.7897	.1663	.5428	.9193
069	.2193	.9076	.5959	.2841	.9724	.6607	.3490	.0372	.4138	.7904	.1669	.5435	.9200
072	.2198	.9081	.5964	.2847	.9730	.6612	.3495	.0378	.4144	.7910	.1676	.5441	.9207
422075	69.2203	70.9086	72.5969	74.2852	75.9735	77.6618	79.3501	81.0384	84.4150	87.7916	91.1682	94.5448	97.9214
078	.2208	.9091	.5974	.2857	.9740	.6624	.3507	.0390	.4156	.7922	.1688	.5455	.9221
081	.2213	.9096	.5979	.2863	.9746	.6629	.3512	.0396	.4162	.7928	.1695	.5461	.9228
084	.2218	.9101	.5984	.2868	.9751	.6635	.3518	.0401	.4168	.7935	.1701	.5468	.9235
087	.2223	.9106	.5990	.2873	.9757	.6640	.3524	.0407	.4174	.7941	.1708	.5475	.9242
422090	69.2228	70.9111	72.5995	74.2878	75.9762	77.6646	79.3529	81.0413	84.4180	87.7947	91.1714	94.5482	97.9249
093	.2233	.9116	.6000	.2884	.9767	.6651	.3535	.0419	.4186	.7953	.1721	.5488	.9256
096	.2237	.9121	.6005	.2889	.9773	.6657	.3540	.0424	.4192	.7960	.1727	.5495	.9263
099	.2242	.9126	.6010	.2894	.9778	.6662	.3546	.0430	.4198	.7966	.1734	.5502	.9270
102	.2247	.9131	.6015	.2900	.9784	.6668	.3552	.0436	.4204	.7972	.1740	.5508	.9277
422105	69.2252	70.9136	72.6021	74.2905	75.9789	77.6673	79.3557	81.0442	84.4210	87.7978	91.1747	94.5515	97.9284
108	.2257	.9141	.6026	.2910	.9794	.6679	.3563	.0447	.4216	.7985	.1753	.5522	.9291
111	.2262	.9146	.6031	.2915	.9800	.6684	.2569	.0453	.4222	.7991	.1760	.5529	.9298
114	.2267	.9152	.6036	.2921	.9805	.6690	.3574	.0459	.4228	.7997	.1766	.5535	.9304
117	.2272	.9157	.6041	.2926	.9811	.6695	.3580	.0465	.4234	.8003	.1773	.5542	.9311
422120	69.2277	70.9162	72.6046	74.2931	75.9816	77.6701	79.3586	81.0470	84.4240	87.8010	91.1779	94.5549	97.9318
123	.2282	.9167	.6052	.2936	.9821	.6706	.3591	.0476	.4246	.8016	.1786	.5556	.9325
126	.2287	.9172	.6057	.2942	.9827	.6712	.3597	.0482	.4252	.8022	.1792	.5562	.9332
129	.2292	.9177	.6062	.2947	.9832	.6717	.3603	.0488	.4258	.8028	.1799	.5569	.9339
132	.2296	.9182	.6067	.2952	.9838	.6723	.3608	.0493	.4264	.8035	.1805	.5576	.9346
422135	69.2301	70.9187	72.6072	74.2958	75.9843	77.6728	79.3614	81.0499	84.4270	87.8041	91.1812	94.5582	97.9353
138	.2306	.9192	.6077	.2963	.9848	.6734	.3619	.0505	.4276	.8047	.1818	.5589	.9360
141	.2311	.9197	.6083	.2968	.9854	.6739	.3625	.0511	.4282	.8053	.1825	.5596	.9367
144	.2316	.9202	.6088	.2973	.9859	.6745	.3631	.0516	.4288	.8060	.1831	.5603	.9374
147	.2321	.9207	.6093	.2979	.9865	.6750	.3636	.0522	.4294	.8066	.1838	.5609	.9381
422150	69.2326	70.9212	72.6098	74.2984	75.9870	77.6756	79.3642	81.0528	84.4300	87.8072	91.1844	94.5616	97.9388
153	.2331	.9217	.6103	.2989	.9875	.6762	.3648	.0534	.4306	.8078	.1850	.5623	.9395
156	.2336	.9222	.6108	.2995	.9881	.6767	.3653	.0540	.4312	.8084	.1857	.5629	.9402
159	.2341	.9227	.6113	.3000	.9886	.6773	.3659	.0545	.4318	.8091	.1863	.5636	.9409
162	.2346	.9232	.6119	.3005	.9892	.6778	.3665	.0551	.4324	.8097	.1870	.5643	.9416
422165	69.2351	70.9237	72.6124	74.3010	75.9897	77.6784	79.3670	81.0557	84.4330	87.8103	91.1876	94.5650	97.9423
168	.2356	.9242	.6129	.3016	.9902	.6789	.3676	.0563	.4336	.8109	.1883	.5656	.9430
171	.2360	.9247	.6134	.3021	.9908	.6795	.3681	.0568	.4342	.8116	.1889	.5663	.9437
174	.2365	.9252	.6139	.3026	.9913	.6800	.3687	.0574	.4348	.8122	.1896	.5670	.9444
177	.2370	.9257	.6144	.3032	.9919	.6806	.3693	.0580	.4354	.8128	.1902	.5676	.9451
422180	69.2375	70.9262	72.6150	74.3037	75.9924	77.6811	79.3698	81.0586	84.4360	87.8134	91.1909	94.5683	97.9458
183	.2380	.9267	.6155	.3042	.9929	.6817	.3704	.0591	.4366	.8141	.1915	.5690	.9465
186	.2385	.9272	.6160	.3047	.9935	.6822	.3710	.0597	.4372	.8147	.1922	.5697	.9472
189	.2390	.9278	.6165	.3053	.9940	.6828	.3715	.0603	.4378	.8153	.1928	.5703	.9478
192	.2395	.9283	.6170	.3058	.9946	.6833	.3721	.0609	.4384	.8159	.1935	.5710	.9485
422195	69.2400	70.9288	72.6175	74.3063	75.9951	77.6839	79.3727	81.0614	84.4390	87.8166	91.1941	94.5717	97.9492
198	.2405	.9293	.6181	.3068	.9956	.6844	.3732	.0620	.4396	.8172	.1948	.5724	.9499
201	.2410	.9298	.6186	.3074	.9962	.6850	.3738	.0626	.4402	.8178	.1954	.5730	.9506
204	.2415	.9303	.6191	.3079	.9967	.6855	.3744	.0632	.4408	.8184	.1961	.5737	.9513
207	.2419	.9308	.6196	.3084	.9973	.6861	.3749	.0637	.4414	.8191	.1967	.5744	.9520
422210	69.2424	70.9313	72.6201	74.3090	75.9978	77.6866	79.3755	81.0643	84.4420	87.8197	91.1974	94.5750	97.9527
213	.2429	.9318	.6206	.3095	.9983	.6872	.3760	.0649	.4426	.8203	.1980	.5757	.9534
216	.2434	.9323	.6212	.3100	.9989	.6877	.3766	.0655	.4432	.8209	.1987	.5764	.9541
219	.2439	.9328	.6217	.3105	.9994	.6883	.3772	.0660	.4438	.8216	.1993	.5771	.9548
222	.2444	.9333	.6222	.3111	76.0000	.6888	.3777	.0666	.4444	.8222	.2000	.5777	.9555
422225	69.2449	70.9338	72.6227	74.3116	76.0005	77.6894	79.3783	81.0672	84.4450	87.8228	91.2006	94.5784	97.9562
228	.2454	.9343	.6232	.3121	.0010	.6900	.3789	.0678	.4456	.8234	.2012	.5791	.9569
231	.2459	.9348	.6237	.3127	.0016	.6905	.3794	.0684	.4462	.8240	.2019	.5797	.9576
234	.2464	.9353	.6242	.3132	.0021	.6911	.3800	.0689	.4468	.8247	.2025	.5804	.9583
237	.2469	.9358	.6248	.3137	.0027	.6916	.3806	.0695	.4474	.8253	.2032	.5811	.9590
422240	69.2474	70.9363	72.6253	74.3142	76.0032	77.6922	79.3811	81.0701	84.4480	87.8259	91.2038	94.5818	97.9597
243	.2479	.9368	.6258	.3148	.0037	.6927	.3817	.0707	.4486	.8365	.2045	.5824	.9604
246	.2483	.9373	.6263	.3153	.0043	.6933	.3822	.0712	.4492	.8272	.2051	.5831	.9611
249	.2488	.9378	.6268	.3158	.0048	.6938	.3828	.0718	.4498	.8278	.2058	.5838	.9618
252	.2493	.9383	.6273	.3164	.0054	.6944	.3834	.0724	.4504	.8284	.2064	.5844	.9625
422255	69.2498	70.9388	72.6279	74.3169	76.0059	77.6949	79.3839	81.0730	84.4510	87.8290	91.2071	94.5851	97.9632
258	.2503	.9393	.6284	.3174	.0064	.6955	.3845	.0735	.4516	.8297	.2077	.5858	.9639
261	.2508	.9398	.6289	.3179	.0070	.6960	.3851	.0741	.4522	.8303	.2084	.5865	.9646
264	.2513	.9404	.6294	.3185	.0075	.6966	.3856	.0747	.4528	.8309	.2090	.5871	.9652
267	.2518	.9409	.6299	.3190	.0081	.6971	.3862	.0753	.4534	.8315	.2097	.5878	.9659
422270	69.2523	70.9414	72.6304	74.3195	76.0086	77.6977	79.3868	81.0758	84.4540	87.8322	91.2103	94.5885	97.9666
273	.2528	.9419	.6310	.3200	.0091	.6982	.3873	.0764	.4546	.8328	.2110	.5892	.9673
276	.2533	.9424	.6315	.3206	.0097	.6988	.3879	.0770	.4552	.8334	.2116	.5898	.9680
279	.2538	.9429	.6320	.3211	.0102	.6993	.3885	.0776	.4558	.8340	.2123	.5905	.9687
282	.2542	.9434	.6325	.3216	.0108	.6999	.3890	.0781	.4564	.8347	.2129	.5912	.9694
422285	69.2547	70.9439	72.6330	74.3222	76.0113	77.7004	79.3896	81.0787	84.4570	87.8353	91.2136	94.5918	97.9701
288	.2552	.9444	.6335	.3227	.0118	.7010	.3901	.0793	.4576	.8359	.2142	.5925	.9708
291	.2557	.9449	.6341	.3232	.0124	.7015	.3907	.0799	.4582	.8365	.2149	.5932	.9715
294	.2562	.9454	.6346	.3237	.0129	.7021	.3913	.0804	.4588	.8372	.2155	.5939	.9722
297	.2567	.9459	.6351	.3243	.0135	.7026	.3918	.0810	.4594	.8378	.2162	.5945	.9729
422300	69.2572	70.9464	72.6356	74.3248	76.0140	77.7032	79.3924	81.0816	84.4600	87.8384	91.2168	94.5952	97.9736

HARMONICS

BASIC FREQ.	112	116	120	124	128	132	136	140	144	148	152	156	160
422300	47.2976	48.9868	50.6760	52.3652	54.0544	55.7436	57.4328	59.1220	60.8112	62.5004	64.1896	65.8788	67.5680
303	.2979	.9871	.6764	.3656	.0548	.7440	.4332	.1224	.8116	.5008	.1901	.8793	.5685
306	.2983	.9875	.6767	.3659	.0552	.7444	.4336	.1228	.8121	.5013	.1905	.8797	.5690
309	.2986	.9878	.6771	.3663	.0556	.7448	.4340	.1233	.8125	.5017	.1910	.8802	.5694
312	.2989	.9882	.6774	.3667	.0559	.7452	.4344	.1237	.8129	.5022	.1914	.8807	.5699
422315	47.2993	48.9885	50.6778	52.3671	54.0563	55.7456	57.4348	59.1241	60.8134	62.5026	64.1919	65.8811	67.5704
318	.2996	.9889	.6782	.3674	.0567	.7460	.4352	.1245	.8138	.5031	.1923	.8816	.5709
321	.3000	.9892	.6785	.3678	.0571	.7464	.4357	.1249	.8142	.5035	.1928	.8821	.5714
324	.3003	.9896	.6789	.3682	.0575	.7468	.4361	.1254	.8147	.5040	.1932	.8825	.5718
327	.3006	.9899	.6792	.3685	.0579	.7472	.4365	.1258	.8151	.5044	.1937	.8830	.5723
422330	47.3010	48.9903	50.6796	52.3689	54.0582	55.7476	57.4369	59.1262	60.8155	62.5048	64.1942	65.8835	67.5728
333	.3013	.9906	.6800	.3693	.0586	.7480	.4373	.1266	.8160	.5053	.1946	.8839	.5733
336	.3016	.9910	.6803	.3697	.0590	.7484	.4377	.1270	.8164	.5057	.1951	.8844	.5738
339	.3020	.9913	.6807	.3700	.0594	.7487	.4381	.1275	.8168	.5062	.1955	.8849	.5742
342	.3023	.9917	.6810	.3704	.0598	.7491	.4385	.1279	.8172	.5066	.1960	.8854	.5747
422345	47.3026	48.9920	50.6814	52.3708	54.0602	55.7495	57.4389	59.1283	60.8177	62.5071	64.1964	65.8858	67.5752
348	.3030	.9924	.6818	.3712	.0605	.7499	.4393	.1287	.8181	.5075	.1969	.8863	.5757
351	.3033	.9927	.6821	.3715	.0609	.7503	.4397	.1291	.8085	.5079	.1974	.8868	.5762
354	.3036	.9931	.6825	.2719	.0613	.7507	.4401	.1296	.8190	.5084	.1878	.8872	.5766
357	.3040	.9934	.6828	.3723	.0617	.7511	.4406	.1300	.8194	.5088	.1983	.8877	.5771
422360	47.3043	48.9938	50.6832	52.3726	54.0621	55.7515	57.4410	59.1304	60.8198	62.5093	64.1987	65.8882	67.5776
363	.3047	.9941	.6836	.3730	.0625	.7519	.4414	.1308	.8203	.5097	.1992	.8886	.5781
366	.3050	.9945	.6839	.3734	.0628	.7523	.4418	.1312	.8207	.5102	.1996	.8891	.5786
369	.3053	.9948	.6843	.3738	.0632	.7527	.4422	.1317	.8211	.5106	.2001	.8896	.5790
372	.3057	.9952	.6846	.3741	.0636	.7531	.4426	.1321	.8216	.5111	.2005	.8900	.5795
422375	47.3060	48.9955	50.6850	52.3745	54.0640	55.7535	57.4430	59.1325	60.8220	62.5115	64.2010	65.8905	67.5800
378	.3063	.9958	.6854	.3749	.0644	.7539	.4434	.1329	.8224	.5119	.2015	.8910	.5805
381	.3067	.9962	.6857	.3752	.0648	.7543	.4438	.1333	.8229	.5124	.2019	.8914	.5810
384	.3070	.9965	.6861	.3756	.0652	.7547	.4442	.1338	.8233	.5128	.2024	.8919	.5814
387	.3073	.9969	.6864	.3760	.0655	.7551	.4446	.1342	.8237	.5133	.2028	.8924	.5819
422390	47.3077	48.9972	50.6868	52.3764	54.0659	55.7555	57.4450	59.1346	60.8242	62.5137	64.2033	65.8928	67.5824
393	.3080	.9976	.6872	.3767	.0663	.7559	.4454	.1350	.8246	.5142	.2037	.8933	.5829
396	.3084	.9979	.6875	.3771	.0667	.7563	.4459	.1354	.8250	.5146	.2042	.8938	.5834
399	.3087	.9983	.6879	.3775	.0671	.7567	.4463	.1359	.8255	.5151	.2046	.8942	.5838
402	.3090	.9986	.6882	.3778	.0675	.7571	.4467	.1363	.8259	.5155	.2051	.8947	.5843
422405	47.3094	48.9990	50.6886	52.3782	54.0678	55.7575	57.4471	59.1367	60.8263	62.5159	64.2056	65.8952	67.5848
408	.3097	.9993	.6890	.3786	.0682	.7579	.4475	.1371	.8268	.5164	.2060	.8956	.5853
411	.3100	.9997	.6893	.3790	.0686	.7583	.4479	.1375	.8272	.5168	.2065	.8961	.5858
414	.3104	49.0000	.6897	.3793	.0690	.7586	.4483	.1380	.8276	.5173	.2069	.8966	.5862
417	.3107	.0004	.6900	.3797	.0694	.7590	.4487	.1384	.8280	.5177	.2074	.8971	.5867
422420	47.3110	49.0007	50.6904	52.3801	54.0698	55.7594	57.4491	59.1388	60.8285	62.5182	64.2078	65.8975	67.5872
423	.3114	.0011	.6908	.3805	.0701	.7598	.4495	.1392	.8289	.5186	.2083	.8980	.5877
426	.3117	.0014	.6911	.3808	.0705	.7602	.4499	.1396	.8293	.5190	.2088	.8985	.5882
429	.3120	.0018	.6915	.3812	.0709	.7606	.4503	.1401	.8298	.5195	.2092	.8989	.5886
432	.3124	.0021	.6918	.3816	.0713	.7610	.4508	.1405	.8302	.5199	.2097	.8994	.5891
422435	47.3127	49.0025	50.6922	52.3819	54.0717	55.7614	57.4512	59.1409	60.8306	62.5204	64.2101	65.8999	67.5896
438	.3131	.0028	.6926	.3823	.0721	.7618	.4516	.1413	.8311	.5208	.2106	.9003	.5901
441	.3134	.0032	.6929	.3827	.0724	.7622	.4520	.1417	.8315	.5213	.2110	.9008	.5906
444	.3137	.0035	.6933	.3831	.0728	.7626	.4524	.1422	.8319	.5217	.2115	.9013	.5910
447	.3141	.0039	.6936	.3834	.0732	.7630	.4528	.1426	.8324	.5222	.2119	.9017	.5915
422450	47.3144	49.0042	50.6940	52.3838	54.0736	55.7634	57.4532	59.1430	60.8328	62.5226	64.2124	65.9022	67.5920
453	.3147	.0045	.6944	.3842	.0740	.7638	.4536	.1434	.8332	.5230	.2129	.9027	.5925
456	.3151	.0049	.6947	.3845	.0744	.7642	.4540	.1438	.8337	.5235	.2133	.9031	.5930
459	.3154	.0052	.6951	.3849	.0748	.7646	.4544	.1443	.8341	.5239	.2138	.9036	.5934
462	.3157	.0056	.6954	.3853	.0751	.7650	.4548	.1447	.8345	.5244	.2142	.9041	.5939
422465	47.3161	49.0059	50.6958	52.3857	54.0755	55.7654	57.4552	59.1451	60.8350	62.5248	64.2147	65.9045	67.5944
468	.3164	.0063	.6962	.3860	.0759	.7658	.4556	.1455	.8354	.5253	.2151	.9050	.5949
471	.3168	.0066	.6965	.3864	.0763	.7662	.4561	.1459	.8358	.5257	.2156	.9055	.5954
474	.3171	.0070	.6969	.3868	.0767	.7666	.4565	.1464	.8363	.5262	.2160	.9059	.5958
477	.3174	.0073	.6972	.3871	.0771	.7670	.4569	.1468	.8367	.5266	.2165	.9064	.5963
422480	47.3178	49.0077	50.6976	52.3875	54.0774	55.7674	57.4573	59.1472	60.8371	62.5270	64.2170	65.9069	67.5968
483	.3181	.0080	.6980	.3879	.0778	.7678	.4577	.1476	.8376	.5275	.2174	.9073	.5973
486	.3184	.0084	.6983	.3883	.0782	.7682	.4581	.1480	.8380	.5279	.2179	.9078	.5978
489	.3188	.0087	.6987	.3886	.0786	.7685	.4585	.1485	.8384	.5284	.2183	.9083	.5982
492	.3191	.0091	.6990	.3890	.0790	.7689	.4589	.1489	.8388	.5288	.2188	.9088	.5987
422495	47.3194	49.0094	50.6994	52.3894	54.0794	55.7693	57.4593	59.1493	60.8393	62.5293	64.2192	65.9092	67.5992
498	.3198	.0098	.6998	.3898	.0797	.7697	.4597	.1497	.8397	.5297	.2197	.9097	.5997
501	.3201	.0101	.7001	.3901	.0801	.7701	.4601	.1501	.8401	.5301	.2202	.9102	.6002
504	.3204	.0105	.7005	.3905	.0805	.7705	.4605	.1506	.8406	.5306	.2206	.9106	.6006
507	.3208	.0108	.7008	.3909	.0809	.7709	.4610	.1510	.8410	.5310	.2211	.9111	.6011
422510	47.3211	49.0112	50.7012	52.3912	54.0813	55.7713	57.4614	59.1514	60.8414	62.5315	64.2215	65.9116	67.6016
513	.3215	.0115	.7016	.3916	.0817	.7717	.4618	.1518	.8419	.5319	.2220	.9120	.6021
516	.3218	.0119	.7019	.3920	.0820	.7721	.4622	.1522	.8423	.5324	.2224	.9126	.6026
519	.3221	.0122	.7023	.3924	.0824	.7725	.4626	.1527	.8427	.5328	.2229	.9130	.6030
522	.3225	.0126	.7026	.3927	.0828	.7729	.4630	.1531	.8432	.5333	.2233	.9134	.6035
422525	47.3228	49.0129	50.7030	52.3931	54.0832	55.7733	57.4634	59.1535	60.8436	62.5337	64.2238	65.9139	67.6040
528	.3231	.0132	.7034	.3935	.0836	.7737	.4638	.1539	.8440	.5341	.2243	.9144	.6045
531	.3235	.0136	.7037	.3938	.0840	.7741	.4642	.1543	.8445	.5346	.2247	.9148	.6050
534	.3238	.0139	.7041	.3942	.0844	.7745	.4646	.1548	.8449	.5350	.2252	.9153	.6054
537	.3241	.0143	.7044	.3946	.0847	.7749	.4650	.1552	.8453	.5355	.2256	.9158	.6059
422540	47.3245	49.0146	50.7048	52.3950	54.0851	55.7753	57.4654	59.1556	60.8458	62.5359	64.2261	65.9162	67.6064
543	.3248	.0150	.7052	.3953	.0855	.7757	.4658	.1560	.8462	.5364	.2265	.9167	.6069
546	.3252	.0153	.7055	.3957	.0859	.7761	.4663	.1564	.8466	.5368	.2270	.9172	.6074
549	.3255	.0157	.7059	.3961	.0863	.7765	.4667	.1569	.8471	.5373	.2274	.9176	.6078
552	.3258	.0160	.7062	.3964	.0867	.7769	.4671	.1573	.8475	.5377	.2279	.9181	.6083
422555	47.3262	49.0164	50.7066	52.3968	54.0870	55.7773	57.4675	59.1577	60.8479	62.5381	64.2284	65.9186	67.6088
558	.3265	.0167	.7070	.3972	.0874	.7777	.4679	.1581	.8484	.5386	.2288	.9190	.6093
561	.3268	.0171	.7073	.3976	.0878	.7781	.4683	.1585	.8488	.5390	.2293	.9195	.6098
564	.3272	.0174	.7077	.3979	.0882	.7784	.4687	.1590	.8492	.5395	.2297	.9200	.6102
567	.3275	.0178	.7080	.3983	.0886	.7788	.4691	.1594	.8496	.5399	.2302	.9205	.6107
422570	47.3278	49.0181	50.7084	52.3987	54.0890	55.7792	57.4695	59.1598	60.8501	62.5404	64.2306	65.9209	67.6112
573	.3282	.0185	.7088	.3991	.0893	.7796	.4699	.1602	.8505	.5408	.2311	.9214	.6117
576	.3285	.0188	.7091	.3994	.0897	.7800	.4703	.1606	.8509	.5412	.2316	.9219	.6122
579	.3288	.0192	.7095	.3998	.0901	.7804	.4707	.1611	.8514	.5417	.2320	.9223	.6126
582	.3292	.0195	.7098	.4002	.0905	.7808	.4712	.1615	.8518	.5421	.2325	.9228	.6131
422585	47.3295	49.0199	50.7102	52.4005	54.0909	55.7812	57.4716	59.1619	60.8522	62.5426	64.2329	65.9233	67.6136
588	.3299	.0202	.7106	.4009	.0913	.7816	.4720	.1623	.8527	.5430	.2334	.9237	.6141
591	.3302	.0206	.7109	.4013	.0916	.7820	.4724	.1627	.8531	.5435	.2338	.9242	.6146
594	.3305	.0209	.7113	.4017	.0920	.7824	.4728	.1632	.8535	.5439	.2343	.9247	.6150
597	.3309	.0213	.7116	.4020	.0924	.7828	.4732	.1636	.8540	.5444	.2347	.9251	.6155
422600	47.3312	49.0216	50.7120	52.4024	54.0928	55.7832	57.4736	59.1640	60.8544	62.5448	64.2352	65.9256	67.6160

MEGACYCLES PER SECOND

HARMONICS

BASIC FREQ.	164	168	172	176	180	184	188	192	200	208	216	224	232
422300	69.2572	70.9464	72.6356	74.3248	76.0140	77.7032	79.3924	81.0816	84.4600	87.8384	91.2168	94.5952	97.9736
303	.2577	.9469	.6361	.3253	.0145	.7038	.3930	.0822	.4606	.8390	.2174	.5959	.9743
306	.2582	.9474	.6366	.3259	.0151	.7043	.3935	.0828	.4612	.8396	.2181	.5965	.9750
309	.2587	.9479	.6371	.3264	.0156	.7049	.3941	.0833	.4618	.8403	.2187	.5972	.9757
312	.2592	.9484	.6377	.3269	.0162	.7054	.3947	.0839	.4624	.8409	.2194	.5979	.9764
422315	69.2597	70.9489	72.6382	74.3274	76.0167	77.7060	79.3952	81.0845	84.4630	87.8415	91.2200	94.5986	97.9771
318	.2602	.9494	.6387	.3280	.0172	.7065	.3958	.0851	.4636	.8421	.2207	.5992	.9778
321	.2606	.9499	.6392	.3285	.0178	.7071	.3963	.0856	.4642	.8428	.2213	.5999	.9785
324	.2611	.9504	.6397	.3290	.0183	.7076	.3969	.0862	.4648	.8434	.2220	.6006	.9792
327	.2616	.9509	.6402	.3296	.0189	.7082	.3975	.0868	.4654	.8440	.2226	.6012	.9799
422330	69.2621	70.9514	72.6408	74.3301	76.0194	77.7087	79.3980	81.0874	84.4660	87.8446	91.2233	94.6019	97.9806
333	.2626	.9519	.6413	.3306	.0199	.7093	.3986	.0879	.4666	.8453	.2239	.6026	.9813
336	.2631	.9524	.6418	.3311	.0205	.7098	.3992	.0885	.4672	.8459	.2246	.6033	.9820
339	.2636	.9530	.6423	.3317	.0210	.7104	.3997	.0891	.4678	.8465	.2252	.6039	.9826
342	.2641	.9535	.6428	.3322	.0216	.7109	.4003	.0897	.4684	.8471	.2259	.6046	.9833
422345	69.2646	70.9540	72.6433	74.3327	76.0221	77.7115	79.4009	81.0902	84.4690	87.8478	91.2265	94.6053	97.9840
348	.2651	.9545	.6439	.3332	.0226	.7120	.4014	.0908	.4696	.8484	.2272	.6060	.9847
351	.2656	.9550	.6444	.3338	.0232	.7126	.4020	.0914	.4702	.8490	.2278	.6066	.9854
354	.2661	.9555	.6449	.3343	.0237	.7131	.4026	.0920	.4708	.8496	.2285	.6073	.9861
357	.2665	.9560	.6454	.3348	.0243	.7137	.4031	.0925	.4714	.8503	.2291	.6080	.9868
422360	69.2670	70.9565	72.6459	74.3354	76.0248	77.7142	79.4037	81.0931	84.4720	87.8509	91.2298	94.6086	97.9875
363	.2675	.9570	.6464	.3359	.0253	.7148	.4042	.0937	.4726	.8515	.2304	.6093	.9882
366	.2680	.9575	.6470	.3364	.0259	.7153	.4048	.0943	.4732	.8521	.2311	.6100	.9889
369	.2685	.9580	.6475	.3369	.0264	.7159	.4054	.0948	.4738	.8528	.2317	.6107	.9896
372	.2690	.9585	.6480	.3375	.0270	.7164	.4059	.0954	.4744	.8534	.2324	.6113	.9903
422375	69.2695	70.9590	72.6485	74.3380	76.0275	77.7170	79.4065	81.0960	84.4750	87.8540	91.2330	94.6120	97.9910
378	.2700	.9595	.6490	.3385	.0280	.7176	.4071	.0966	.4756	.8546	.2336	.6127	.9917
381	.2705	.9600	.6495	.3391	.0286	.7181	.4076	.0972	.4762	.8552	.2343	.6133	.9924
384	.2710	.9605	.6500	.3396	.0291	.7187	.4082	.0977	.4768	.8559	.2349	.6140	.9931
387	.2715	.9610	.6506	.3401	.0297	.7192	.4088	.0983	.4774	.8565	.2356	.6147	.9938
422390	69.2720	70.9615	72.6511	74.3406	76.0302	77.7198	79.4093	81.0989	84.4780	87.8571	91.2362	94.6154	97.9945
393	.2725	.9620	.6516	.3412	.0307	.7203	.4099	.0995	.4786	.8577	.2369	.6160	.9952
396	.2729	.9625	.6521	.3417	.0313	.7209	.4104	.1000	.4792	.8584	.2375	.6167	.9959
399	.2734	.9630	.6526	.3422	.0318	.7214	.4110	.1006	.4798	.8590	.2382	.6174	.9966
402	.2739	.9635	.6531	.3428	.0324	.7220	.4116	.1012	.4804	.8596	.2388	.6180	.9973
422405	69.2744	70.9640	72.6537	74.3433	76.0329	77.7225	79.4121	81.1018	84.4810	87.8602	91.2395	94.6187	97.9980
408	.2749	.9645	.6542	.3438	.0334	.7231	.4127	.1023	.4816	.8609	.2401	.6194	.9987
411	.2754	.9650	.6547	.3443	.0340	.7236	.4133	.1029	.4822	.8615	.2408	.6201	.9994
414	.2759	.9656	.6552	.3449	.0345	.7242	.4138	.1035	.4828	.8621	.2414	.6207	98.0000
417	.2764	.9661	.6557	.3454	.0351	.7247	.4144	.1041	.4834	.8267	.2421	.6214	.0007
422420	69.2769	70.9666	72.6562	74.3459	76.0356	77.7253	79.4150	81.1046	84.4840	87.8634	91.2427	94.6221	98.0014
423	.2774	.9671	.6568	.3464	.0361	.7258	.4155	.1052	.4846	.8640	.2434	.6228	.0021
426	.2779	.9676	.6573	.3470	.0367	.7264	.4161	.1058	.4852	.8646	.2440	.6234	.0028
429	.2784	.9681	.6578	.3475	.0372	.7269	.4167	.1064	.4858	.8652	.2447	.6241	.0035
432	.2788	.9686	.6583	.3480	.0378	.7275	.4172	.1069	.4864	.8659	.2453	.6248	.0042
422435	69.2793	70.9691	72.6588	74.3486	76.0383	77.7280	79.4178	81.1075	84.4870	87.8665	91.2460	94.6254	98.0049
438	.2798	.9696	.6593	.3491	.0388	.7286	.4183	.1081	.4876	.8671	.2466	.6261	.0056
441	.2803	.9701	.6599	.3496	.0394	.7291	.4189	.1087	.4882	.8677	.2473	.6268	.0063
444	.2808	.9706	.6604	.3501	.0399	.7297	.4195	.1092	.4888	.8684	.2479	.6275	.0070
447	.2813	.9711	.6609	.3507	.0405	.7302	.4200	.1098	.4894	.8690	.2486	.6281	.0077
422450	69.2818	70.9716	72.6614	74.3512	76.0410	77.7308	79.4206	81.1104	84.4900	87.8696	91.2492	94.6288	98.0084
453	.2823	.9721	.6619	.3517	.0415	.7314	.4212	.1110	.4906	.8702	.2498	.6295	.0091
456	.2828	.9726	.6624	.3523	.0421	.7319	.4217	.1116	.4912	.8708	.2505	.6301	.0098
459	.2833	.9731	.6629	.3528	.0426	.7325	.4223	.1121	.4918	.8715	.2511	.6308	.0105
462	.2838	.9736	.6635	.3533	.0432	.7330	.4229	.1127	.4924	.8721	.2518	.6315	.0112
422465	69.2843	70.9741	72.6640	74.3538	76.0437	77.7336	79.4234	81.1133	84.4930	87.8727	91.2524	94.6322	98.0119
468	.2848	.9746	.6645	.3544	.0442	.7341	.4240	.1139	.4936	.8733	.2531	.6328	.0126
471	.2852	.9751	.6650	.3549	.0448	.7347	.4245	.1144	.4942	.8740	.2537	.6335	.0133
474	.2857	.9756	.6655	.3554	.0453	.7352	.4251	.1150	.4948	.8746	.2544	.6342	.0140
477	.2862	.9761	.6660	.3560	.0459	.7358	.4257	.1156	.4954	.8752	.3550	.6348	.0147
422480	69.2867	70.9766	72.6666	74.3565	76.0464	77.7363	79.4262	81.1162	84.4960	87.8758	91.2557	94.6355	98.0154
483	.2872	.9771	.6671	.3570	.0469	.7369	.4268	.1167	.4966	.8765	.2563	.6362	.0161
486	.2877	.9776	.6676	.3575	.0475	.7374	.4274	.1173	.4972	.8771	.2570	.6369	.0168
489	.2882	.9782	.6681	.3581	.0480	.7380	.4279	.1179	.4978	.8777	.2576	.6375	.0174
492	.2887	.9787	.6686	.3586	.0486	.7385	.4285	.1185	.4984	.8783	.2583	.6382	.0181
422495	69.2892	70.9792	72.6691	74.3591	76.0491	77.7391	79.4291	81.1190	84.4990	87.8790	91.2589	94.6389	98.0188
498	.2897	.9797	.6697	.3596	.0496	.7396	.4296	.1196	.4996	.8796	.2596	.6396	.0195
501	.2902	.9802	.6702	.3602	.0502	.7402	.4302	.1202	.5002	.8802	.2602	.6402	.0202
504	.2907	.9807	.6707	.3607	.0507	.7407	.4308	.1208	.5008	.8808	.2609	.6409	.0209
507	.2911	.9812	.6712	.3612	.0513	.7413	.4313	.1213	.5014	.8815	.2615	.6416	.0216
422510	69.2916	70.9817	72.6717	74.3618	76.0518	77.7418	79.4319	81.1219	84.5020	87.8821	91.2622	94.6422	98.0223
513	.2921	.9822	.6722	.3623	.0523	.7424	.4324	.1225	.5026	.8827	.2628	.6429	.0230
516	.2926	.9827	.6728	.3628	.0529	.7429	.4330	.1231	.5032	.8833	.2635	.6436	.0237
519	.2931	.9832	.6733	.3633	.0534	.7435	.4336	.1236	.5038	.8840	.2641	.6443	.0244
522	.2936	.9837	.6738	.3639	.0540	.7440	.4341	.1242	.5044	.8846	.2648	.6449	.0251
422525	69.2941	70.9842	72.6743	74.3644	76.0545	77.7446	79.4347	81.1248	84.5050	87.8852	91.2654	94.6456	98.0258
528	.2946	.9847	.6748	.3649	.0550	.7452	.4353	.1254	.5056	.8858	.2660	.6463	.0265
531	.2951	.9852	.6753	.3655	.0556	.7457	.4358	.1260	.5062	.8864	.2667	.6469	.0272
534	.2956	.9857	.6758	.3660	.0561	.7463	.4364	.1265	.5068	.8871	.2673	.6476	.0279
537	.2961	.9862	.6764	.3665	.0567	.7468	.4370	.1271	.5074	.8877	.2680	.6483	.0286
422540	69.2966	70.9867	72.6769	74.3670	76.0572	77.7474	79.4375	81.1277	84.5080	87.8883	91.2686	94.6490	98.0293
543	.2971	.9872	.6774	.3676	.0577	.7479	.4381	.1283	.5086	.8889	.2693	.6496	.0300
546	.2975	.9877	.6779	.3681	.0583	.7485	.4386	.1288	.5092	.8896	.2699	.6503	.0307
549	.2980	.9882	.6784	.3686	.0588	.7490	.4392	.1294	.5098	.8902	.2706	.6510	.0314
552	.2985	.9887	.6789	.3692	.0594	.7496	.4398	.1300	.5104	.8908	.2712	.6516	.0321
422555	69.2990	70.9892	72.6795	74.3697	76.0599	77.7501	79.4403	81.1306	84.5110	87.8914	91.2719	94.6523	98.0328
558	.2995	.9897	.6800	.3702	.0604	.7507	.4409	.1311	.5116	.8921	.2725	.6530	.0335
561	.3000	.9902	.6805	.3707	.0610	.7512	.4415	.1317	.5122	.8927	.2732	.6537	.0342
564	.3005	.9908	.6810	.3713	.0615	.7518	.4420	.1323	.5128	.8933	.2738	.6543	.0348
567	.3010	.9913	.6815	.3718	.0621	.7523	.4426	.1329	.5134	.8939	.2745	.6550	.0355
422570	69.3015	70.9918	72.6820	74.3723	76.0626	77.7529	79.4432	81.1334	84.5140	87.8946	91.2751	94.6557	98.0362
573	.3020	.9923	.6826	.3728	.0631	.7534	.4437	.1340	.5146	.8952	.2758	.6564	.0369
576	.3025	.9928	.6831	.3734	.0637	.7540	.4443	.1346	.5152	.8958	.2764	.6570	.0376
579	.3030	.9933	.6836	.3739	.0642	.7545	.4449	.1352	.5158	.8964	.2771	.6577	.0383
582	.3034	.9938	.6841	.3744	.0648	.7551	.4454	.1357	.5164	.8971	.2777	.6584	.0390
422585	69.3039	70.9943	72.6846	74.3750	76.0653	77.7556	79.4460	81.1363	84.5170	87.8977	91.2784	94.6590	98.0397
588	.3044	.9948	.6851	.3755	.0658	.7562	.4465	.1369	.5176	.8983	.2790	.6597	.0404
591	.3049	.9953	.6857	.3760	.0664	.7567	.4471	.1375	.5182	.8989	.2797	.6604	.0411
594	.3054	.9958	.6862	.3765	.0669	.7573	.4477	.1380	.5188	.8996	.2803	.6611	.0418
597	.3059	.9963	.6867	.3771	.0675	.7578	.4482	.1386	.5194	.9002	.2810	.6617	.0425
422600	69.3064	70.9968	72.6872	74.3776	76.0680	77.7584	79.4488	81.1392	84.5200	87.9008	91.2816	94.6624	98.0432

H A R M O N I C S

BASIC FREQ.	112	116	120	124	128	132	136	140	144	148	152	156	160
422600	47.3312	49.0216	50.7120	52.4024	54.0928	55.7832	57.4736	59.1640	60.8544	62.5448	64.2352	65.9256	67.6160
603	.3315	.0219	.7124	.4028	.0932	.7836	.4740	.1644	.8548	.5452	.2357	.9261	.6165
606	.3319	.0223	.7127	.4031	.0936	.7840	.4744	.1648	.8553	.5457	.2361	.9265	.6170
609	.3322	.0226	.7131	.4035	.0940	.7844	.4748	.1653	.8557	.5461	.2366	.9270	.6174
612	.3325	.0230	.7134	.4039	.0943	.7848	.4752	.1657	.8561	.5466	.2370	.9275	.6179
422615	47.3329	49.0233	50.7138	52.4043	54.0947	55.7852	57.4756	59.1661	60.8566	62.5470	64.2375	65.9279	67.6184
618	.3332	.0237	.7142	.4046	.0951	.7856	.4760	.1665	.8570	.5475	.2379	.9284	.6189
621	.3336	.0240	.7145	.4050	.0955	.7860	.4765	.1669	.8574	.5479	.2384	.9289	.6194
624	.3339	.0244	.7149	.4054	.0959	.7864	.4769	.1674	.8579	.5484	.2388	.9293	.6198
627	.3342	.0247	.7152	.4057	.0963	.7868	.4773	.1678	.8583	.5488	.2393	.9298	.6203
422630	47.3346	49.0251	50.7156	52.4061	54.0966	55.7872	57.4777	59.1682	60.8587	62.5492	64.2398	65.9303	67.6208
633	.3349	.0254	.7160	.4065	.0970	.7876	.4781	.1686	.8592	.5497	.2402	.9307	.6213
636	.3352	.0258	.7163	.4069	.0974	.7880	.4785	.1690	.8596	.5501	.2407	.9312	.6218
639	.3356	.0261	.7167	.4072	.0978	.7883	.4789	.1695	.8600	.5506	.2411	.9317	.6222
642	.3359	.0265	.7170	.4076	.0982	.7887	.4793	.1699	.8604	.5510	.2416	.9322	.6227
422645	47.3362	49.0268	50.7174	52.4080	54.0986	55.7891	57.4797	59.1703	60.8609	62.5515	64.2420	65.9326	67.6232
648	.3366	.0272	.7178	.4084	.0989	.7895	.4801	.1707	.8613	.5519	.2425	.9331	.6237
651	.3369	.0275	.7181	.4087	.0993	.7899	.4805	.1711	.8617	.5523	.2430	.9336	.6242
654	.3372	.0279	.7185	.4091	.0997	.7903	.4809	.1716	.8622	.5528	.2434	.9340	.6246
657	.3376	0282	7188	.4095	.1001	.7907	.4814	.1720	.8626	.5532	.2439	.9345	.6251
422660	47.3379	49.0286	50.7192	52.4098	54.1005	55.7911	57.4818	59.1724	60.8630	62.5537	64.2443	65.9350	67.6256
663	.3383	.0289	.7196	.4102	.1009	.7915	.4822	.1728	.8635	.5541	.2448	.9354	.6261
666	.3386	.0293	.7199	.4106	.1012	.7919	.4826	.1732	.8639	.5546	.2452	.9359	.6266
669	.3389	.0296	.7203	.4110	.1016	.7923	.4830	.1737	.8643	.5550	.2457	.9364	.6270
672	.3393	.0300	.7206	.4113	.1020	.7927	.4834	.1741	.8648	5555	.2461	.9368	.6275
422675	47.3396	49.0303	50.7210	52.4117	54.1024	55.7931	57.4838	59.1745	60.8652	62.5559	64.2466	65.9373	67.6280
678	.3399	.0306	.7214	.4121	.1028	.7935	.4842	.1749	.8656	.5563	.2471	.9378	.6285
681	.3403	.0310	.7217	.4124	.1032	.7939	.4846	.1753	.8661	.5568	.2475	.9382	.6290
684	.3406	.0313	.7221	.4128	.1036	.7943	.4850	.1758	.8665	.5572	.2480	.9387	.6294
687	.3409	.0317	.7224	.4132	.1039	.7947	.4854	.1762	.8669	.5577	.2484	.9392	.6299
422690	47.3413	49.0320	50.7228	52.4136	54.1043	55.7951	57.4858	59.1766	60.8674	62.5581	64.2489	65.9396	67.6304
693	.3416	.0324	.7232	.4139	.1047	.7955	.4862	.1770	.8678	.5586	.2493	.9401	.6309
696	.3420	.0327	.7235	.4143	.1051	.7959	.4867	.1774	.8682	.5590	.2498	.9406	.6314
699	.3423	.0331	.7239	.4147	.1055	.7963	.4871	.1779	.8687	.5595	.2502	.9410	.6318
702	.3426	.0334	.7242	.4150	.1059	.7967	.4875	.1783	.8691	.5599	.2507	.9415	.6323
422705	47.3430	49.0338	50.7246	52.4154	54.1062	55.7971	57.4879	59.1787	60.8695	62.5603	64.2512	65.9420	67.6328
708	.3433	.0341	.7250	.4158	.1066	.7975	.4883	.1791	.8700	.5608	.2516	.9424	.6333
711	.3436	.0345	.7253	.4162	.1070	.7979	.4887	.1795	.8704	.5612	.2521	.9429	.6338
714	.3440	.0348	.7257	.4165	.1074	.7982	.4891	.1800	.8708	.5617	.2525	.9434	.6342
717	.3443	.0352	.7260	.4169	.1078	.7986	.4895	.1804	.8712	.5621	.2530	.9439	.6347
422720	47.3446	49.0355	50.7264	52.4173	54.1082	55.7990	57.4899	59.1808	60.8717	62.5626	64.2534	65.9443	67.6352
723	.3450	.0359	.7268	.4177	.1085	.7994	.4903	.1812	.8721	.5630	.2539	.9448	.6357
726	.3453	.0362	.7271	.4180	.1089	.7998	.4907	.1816	.8725	.5634	.2544	.9453	.6362
729	.3456	.0366	.7275	.4184	.1093	.8002	.4911	.1821	.8730	.5639	.2548	.9457	.6366
732	.3460	.0369	.7278	.4188	.1097	.8006	.4916	.1825	.8734	.5643	.2553	.9462	.6371
422735	47.3463	49.0373	50.7282	52.4191	54.1101	55.8010	57.4920	59.1829	60.8738	62.5648	64.2557	65.9467	67.6376
738	.3467	.0376	.7286	.4195	.1105	.8014	.4924	.1833	.8743	.5652	.2562	.9471	.6381
741	.3470	.0380	.7289	.4199	.1108	.8018	.4928	.1837	.8747	.5657	.2566	.9476	.6386
744	.3473	.0383	.7293	.4203	.1112	.8022	.4932	.1842	.8751	.5661	.2571	.9481	.6390
747	.3477	.0387	.7296	.4206	.1116	.8026	.4936	.1846	.8756	.5666	.2575	.9485	.6395
422750	47.3480	49.0390	50.7300	52.4210	54.1120	55.8030	57.4940	59.1850	60.8760	62.5670	64.2580	65.9490	67.6400
753	.3483	.0393	.7304	.4214	.1124	.8034	.4944	.1854	.8764	.5674	.2585	.9495	.6405
756	.3487	.0397	.7307	.4217	.1128	.8038	.4948	.1858	.8769	.5679	.2589	.9499	.6410
759	.3490	.0400	.7311	.4221	.1132	.8042	.4952	.1863	.8773	.5683	.2594	.9504	.6414
762	.3493	.0404	.7314	.4225	.1135	.8046	.4956	.1867	.8777	.5688	.2598	.9509	.6419
422765	47.3497	49.0407	50.7318	52.4229	54.1139	55.8050	57.4960	59.1871	60.8782	62.5692	64.2603	65.9513	67.6424
768	.3500	.0411	.7322	.4232	.1143	.8054	.4964	.1875	.8786	.5697	.2607	.9518	.6429
771	.3504	.0414	.7325	.4236	.1147	.8058	.4969	.1879	.8790	.5701	.2612	.9523	.6434
774	.3507	.0418	.7329	.4240	.1151	.8062	.4973	.1884	.8795	.5706	.2616	.9527	.6438
777	.3510	.0421	.7332	.4243	.1155	.8066	.4977	.1888	.8799	.5710	.2621	.9532	.6443
422780	47.3514	49.0425	50.7336	52.4247	54.1158	55.8070	57.4981	59.1892	60.8803	62.5714	64.2626	65.9537	67.6448
783	.3517	.0428	.7340	.4251	.1162	.8074	.4985	.1896	.8808	.5719	.2630	.9541	.6453
786	.3520	.0432	.7343	.4255	.1166	.8078	.4989	.1900	.8812	.5723	.2635	.9546	.6458
789	.3524	.0435	.7347	.4258	.1170	.8081	.4993	.1905	.8816	.5728	.2639	.9551	.6462
792	.3527	.0439	.7350	.4262	.1174	.8085	.4997	.1909	.8820	.5732	.2644	.9556	.6467
422795	47.3530	49.0442	50.7354	52.4266	54.1178	55.8089	57.5001	59.1913	60.8825	62.5737	64.2648	65.9560	67.6472
798	.3534	.0446	.7358	.4270	.1181	.8093	.5005	.1917	.8829	.5741	.2653	.9565	.6477
801	.3537	.0449	.7361	.4273	.1185	.8097	.5009	.1921	.8833	.5745	.2658	.9570	.6482
804	.3540	.0453	.7365	.4277	.1189	.8101	.5013	.1926	.8838	.5750	.2662	.9574	.6486
807	.3544	.0456	.7368	.4281	.1193	.8105	.5018	.1930	.8842	.5754	.2667	.9579	.6491
422810	47.3547	49.0460	50.7372	52.4284	54.1197	55.8109	57.5022	59.1934	60.8846	62.5759	64.2671	65.9584	67.6496
813	.3551	.0463	.7376	.4288	.1201	.8113	.5026	.1938	.8851	.5763	.2676	.9588	.6501
816	.3554	.0467	.7379	.4292	.1204	.8117	.5030	.1942	.8855	.5768	.2680	.9593	.6506
819	.3557	.0470	.7383	.4296	.1208	.8121	.5034	.1947	.8859	.5772	.2685	.9598	.6510
822	.3561	.0474	.7386	.4299	.1212	.8125	.5038	.1951	.8864	.5777	.2689	.9602	.6515
422825	47.3564	49.0477	50.7390	52.4303	54.1216	55.8129	57.5042	59.1955	60.8868	62.5781	64.2694	65.9607	67.6520
828	.3567	.0480	.7394	.4307	.1220	.8133	.5046	.1959	.8872	.5785	.2699	.9612	.6525
831	.3571	.0484	.7397	.4310	.1224	.8137	.5050	.1963	.8877	.5790	.2703	.9616	.6530
834	.3574	.0487	.7401	.4314	.1228	.8141	.5054	.1968	.8881	.5794	.2708	.9621	.6534
837	.3577	.0491	.7404	.4318	.1231	.8145	.5058	.1972	.8885	.5799	.2712	.9626	.6539
422840	47.3581	49.0494	50.7408	52.4322	54.1235	55.8149	57.5062	59.1976	60.8890	62.5803	64.2717	65.9630	67.6544
843	.3584	.0498	.7412	.4325	.1239	.8153	.5066	.1980	.8894	.5808	.2721	.9635	.6549
846	.3588	.0501	.7415	.4329	.1243	.8157	.5071	.1984	.8898	.5812	.2726	.9640	.6554
849	.3591	.0505	.7419	.4333	.1247	.8161	.5075	.1989	.8903	.5817	.2730	.9644	.6558
852	.3594	.0508	.7422	.4336	.1251	.8165	.5079	.1993	.8907	.5821	.2735	.9649	.6563
422855	47.3598	49.0512	50.7426	52.4340	54.1254	55.8169	57.5083	59.1997	60.8911	62.5825	64.2740	65.9654	67.6568
858	.3601	.0515	.7430	.4344	.1258	.8173	.5087	.2001	.8916	.5830	.2744	.9658	.6573
861	.3604	.0519	.7433	.4348	.1262	.8177	.5091	.2005	.8920	.5834	.2749	.9663	.6578
864	.3608	.0522	.7437	.4351	.1266	.8180	.5095	.2010	.8924	.5839	.2753	.9668	.6582
867	.3611	.0526	.7440	.4355	.1270	.8184	.5099	.2014	.8928	.5843	.2758	.9673	.6587
422870	47.3614	49.0529	50.7444	52.4359	54.1274	55.8188	57.5103	59.2018	60.8933	62.5848	64.2762	65.9677	67.6592
873	.3618	.0533	.7448	.4363	.1277	.8192	.5107	.2022	.8937	.5852	.2767	.9682	.6597
876	.3621	.0536	.7451	.4366	.1281	.8196	.5111	.2026	.8941	.5856	.2772	.9687	.6602
879	.3624	.0540	.7455	.4370	.1285	.8200	.5115	.2031	.8946	.5861	.2776	.9691	.6606
882	.3628	.0543	.7458	.4374	.1289	.8204	.5120	.2035	.8950	.5865	.2781	.9696	.6611
422885	47.3631	49.0547	50.7462	52.4377	54.1293	55.8208	57.5124	59.2039	60.8954	62.5870	64.2785	65.9701	67.6616
888	.3635	.0550	.7466	.4381	.1297	.8212	.5128	.2043	.8959	.5874	.2790	.9705	.6621
891	.3638	.0554	.7469	.4385	.1300	.8216	.5132	.2047	.8963	.5879	.2794	.9710	.6626
894	.3641	.0557	.7473	.4389	.1304	.8220	.5136	.2052	.8967	.5883	.2799	.9715	.6630
897	.3645	.0561	.7476	.4392	.1308	.8224	.5140	.2056	.8972	.5888	.2803	.9719	.6635
422900	47.3648	49.0564	50.7480	52.4396	54.1312	55.8228	57.5144	59.2060	60.8976	62.5892	64.2808	65.9724	67.6640

MEGACYCLES PER SECOND

L

HARMONICS

BASIC FREQ.	164	168	172	176	180	184	188	192	200	208	216	224	232
422600	69.3064	70.9968	72.6872	74.3776	76.0680	77.7584	79.4488	81.1392	84.5200	87.9008	91.2816	94.6624	98.0432
603	.3069	.9973	.6877	.3781	.0685	.7590	.4494	.1398	.5206	.9014	.2822	.6631	.0439
606	.3074	.9978	.6882	.3787	.0691	.7595	.4499	.1404	.5212	.9020	.2829	.6637	.0446
609	.3079	.9983	.6887	.3792	.0696	.7601	.4505	.1409	.5218	.9027	.2835	.6644	.0453
612	3084	.9988	.6893	.3797	.0702	.7606	.4511	.1415	.5224	.9033	.2842	.6651	.0460
422615	69.3089	70.9993	72.6898	74.3802	76.0707	77.7612	79.4516	81.1421	84.5230	87.9039	91.2848	94.6658	98.0467
618	.3094	.9998	.6903	.3808	.0712	.7617	.4522	.1427	.5236	.9045	.2855	.6664	.0474
621	.3098	71.0003	.6908	.3813	.0718	.7623	.4527	.1432	.5242	.9052	.2861	.6671	.0481
624	.3103	.0008	.6913	.3818	.0723	.7628	.4533	.1438	.5248	.9058	.2868	.6678	.0488
627	.3108	.0013	.6918	.3824	.0729	.7634	.4539	.1444	.5254	.9064	.2874	.6684	.0495
422630	69.3113	71.0018	72.6924	74.3829	76.0734	77.7639	79.4544	81.1450	84.5260	87.9070	91.2881	94.6691	98.0502
633	.3118	.0023	.6929	.3834	.0739	.7645	.4550	.1455	.5266	.9077	.2887	.6698	.0509
636	.3123	.0028	.6934	.3839	.0745	.7650	.4556	.1461	.5272	.9083	.2894	.6705	.0516
639	.3128	.0034	.6939	.3845	.0750	.7656	.4561	.1467	.5278	.9089	.2900	.6711	.0522
642	.3133	.0039	.6944	.3850	.0756	.7661	.4567	.1473	.5284	.9095	.2907	.6718	.0529
422645	69.3138	71.0044	72.6949	74.3855	76.0761	77.7667	79.4573	81.1478	84.5290	87.9102	91.2913	94.6725	98.0536
648	.3143	.0049	.6955	.3860	.0766	.7672	.4578	.1484	.5296	.9108	.2920	.6732	.0543
651	.3148	.0054	.6960	.3866	.0772	.7678	.4584	.1490	.5302	.9114	.2926	.6738	.0550
654	.3153	.0059	.6965	.3871	.0777	.7683	.4590	.1496	.5308	.9120	.2933	.6745	.0557
657	.3157	.0064	.6970	.3876	.0783	.7689	.4595	.1501	.5314	.9127	.2939	.6752	.0564
422660	69.3162	71.0069	72.6975	74.3882	76.0788	77.7694	79.4601	81.1507	84.5320	87.9133	91.2946	94.6758	98.0571
663	.3167	.0074	.6980	.3887	.0793	.7700	.4606	.1513	.5326	.9139	.2952	.6765	.0578
666	.3172	.0079	.6986	.3892	.0799	.7705	.4612	.1519	.5332	.9145	.2959	.6772	.0585
669	.3177	.0084	.6991	.3897	.0804	.7711	.4618	.1524	.5338	.9152	.2965	.6779	.0592
672	.3182	.0089	.6996	.3903	.0810	.7716	.4623	.1530	.5344	.9158	.2972	.6785	.0599
422675	69.3187	71.0094	72.7001	74.3908	76.0815	77.7722	79.4629	81.1536	84.5350	87.9164	91.2978	94.6792	98.0606
678	.3192	.0099	.7006	.3913	.0820	.7728	.4635	.1542	.5356	.9170	.2984	.6799	.0613
681	.3197	.0104	.7011	.3919	.0826	.7733	.4640	.1548	.5362	.9176	.2991	.6805	.0620
684	.3202	.0109	.7016	.3924	.0831	.7739	.4646	.1553	.5368	.9183	.2997	.6812	.0627
687	.3207	.0114	.7022	.3929	.0837	.7744	.4652	.1559	.5374	.9189	.3004	.6819	.0634
422690	69.3212	71.0119	72.7027	74.3934	76.0842	77.7750	79.4657	81.1565	84.5380	87.9195	91.3010	94.6826	98.0641
693	.3217	.0124	.7032	.3940	.0847	.7755	.4663	.1571	.5386	.9201	.3017	.6832	.0648
696	.3221	.0129	.7037	.3945	.0853	.7761	.4668	.1576	.5392	.9208	.3023	.6839	.0655
699	.3226	.0134	.7042	.3950	.0858	.7766	.4674	.1582	.5398	.9214	.3030	.6846	.0662
702	.3231	.0139	.7047	.3956	.0864	.7772	.4680	.1588	.5404	.9220	.3036	.6852	.0669
422705	69.3236	71.0144	72.7053	74.3961	76.0869	77.7777	79.4685	81.1594	84.5410	87.9226	91.3043	94.6859	98.0676
708	.3241	.0149	.7058	.3966	.0874	.7783	.4691	.1599	.5416	.9233	.3049	.6866	.0683
711	.3246	.0154	.7063	.3971	.0880	.7788	.4697	.1605	.5422	.9239	.3056	.6873	.0690
714	.3251	.0160	.7068	.3977	.0885	.7794	.4702	.1611	.5428	.9245	.3062	.6879	.0696
717	.3256	.0165	.7073	.3982	.0891	.7799	.4708	.1617	.5434	.9251	.3069	.6886	.0703
422720	69.3261	71.0170	72.7078	74.3987	76.0896	77.7805	79.4714	81.1622	84.5440	87.9258	91.3075	94.6893	98.0710
723	.3266	.0175	.7084	.3992	.0901	.7810	.4719	.1628	.5446	.9264	.3082	.6900	.0717
726	.3271	.0180	.7089	.3998	.0907	.7816	.4725	.1634	.5452	.9270	.3088	.6906	.0724
729	.3276	.0185	.7094	.4003	.0912	.7821	.4731	.1640	.5458	.9276	.3095	.6913	.0731
732	.3280	.0190	.7099	.4008	.0918	.7827	.4736	.1645	.5464	.9283	.3101	.6920	.0738
422735	69.3285	71.0195	72.7104	74.4014	76.0923	77.7832	79.4742	81.1651	84.5470	87.9289	91.3108	94.6926	98.0745
738	.3290	.0200	.7109	.4019	.0928	.7838	.4747	.1657	.5476	.9295	.3114	.6933	.0752
741	.3295	.0205	.7115	.4024	.0934	.7843	.4753	.1663	.5482	.9301	.3121	.6940	.0759
744	.3300	.0210	.7120	.4029	.0939	.7849	.4759	.1668	.5488	.9308	.3127	.6947	.0766
747	.3305	.0215	.7125	.4035	.0945	.7854	.4764	.1674	.5494	.9314	.3134	.6953	.0773
422750	69.3310	71.0220	72.7130	74.4040	76.0950	77.7860	79.4770	81.1680	84.5500	87.9320	91.3140	94.6960	98.0780
753	.3315	.0225	.7135	.4045	.0955	.7866	.4776	.1686	.5506	.9326	.3146	.6967	.0787
756	.3320	.0230	.7140	.4051	.0961	.7871	.4781	.1692	.5512	.9332	.3153	.6973	.0794
759	.3325	.0235	.7145	.4056	.0966	.7877	.4787	.1697	.5518	.9339	.3159	.6980	.0801
762	.3330	.0240	.7151	.4061	.0972	.7882	.4793	.1703	.5524	.9345	.3166	.6987	.0808
422765	69.3335	71.0245	72.7156	74.4066	76.0977	77.7888	79.4798	81.1709	84.5530	87.9351	91.3172	94.6994	98.0815
768	.3340	.0250	.7161	.4072	.0982	.7893	.4804	.1715	.5536	.9357	.3179	.7000	.0822
771	.3344	.0255	.7166	.4077	.0988	.7899	.4809	.1720	.5542	.9364	.3185	.7007	.0829
774	.3349	.0260	.7171	.4082	.0993	.7904	.4815	.1726	.5548	.9370	.3192	.7014	.0836
777	.3354	.0265	.7176	.4088	.0999	.7910	.4821	.1732	.5554	.9376	.3198	.7020	.0843
422780	69.3359	71.0270	72.7182	74.4093	76.1004	77.7915	79.4826	81.1738	84.5560	87.9382	91.3205	94.7027	98.0850
783	.3364	.0275	.7187	.4098	.1009	.7921	.4832	.1743	.5566	.9389	.3211	.7034	.0857
786	.3369	.0280	.7192	.4103	.1015	.7926	.4838	.1749	.5572	.9395	.3218	.7041	.0864
789	.3374	.0286	.7197	.4109	.1020	.7932	.4843	.1755	.5578	.9401	.3224	.7047	.0870
792	.3379	.0291	.7202	.4114	.1026	.7937	.4849	.1761	.5584	.9407	.3231	.7054	.0877
422795	69.3384	71.0296	72.7207	74.4119	76.1031	77.7943	79.4855	81.1766	84.5590	87.9414	91.3237	94.7061	98.0884
798	.3389	.0301	.7213	.4124	.1036	.7948	.4860	.1772	.5596	.9420	.3244	.7068	.0891
801	.3394	.0306	.7218	.4130	.1042	.7954	.4866	.1778	.5602	.9426	.3250	.7074	.0898
804	.3399	.0311	.7223	.4135	.1047	.7959	.4872	.1784	.5608	.9432	.3257	.7081	.0905
807	.3403	.0316	.7228	.4140	.1053	.7965	.4877	.1789	.5614	.9439	.3263	.7088	.0912
422810	69.3408	71.0321	72.7233	74.4146	76.1058	77.7970	79.4883	81.1795	84.5620	87.9445	91.3270	94.7094	98.0919
813	.3413	.0326	.7238	.4151	.1063	.7976	.4888	.1801	.5626	.9451	.3276	.7101	.0926
816	.3418	.0331	.7244	.4156	.1069	.7981	.4894	.1807	.5632	.9457	.3283	.7108	.0933
819	.3423	.0336	.7249	.4161	.1074	.7987	.4900	.1812	.5638	.9464	.3289	.7115	.0940
822	.3428	.0341	.7254	.4167	.1080	.7992	.4905	.1818	.5644	.9470	.3296	.7121	.0947
422825	69.3433	71.0346	72.7259	74.4172	76.1085	77.7998	79.4911	81.1824	84.5650	87.9476	91.3302	94.7128	98.0954
828	.3438	.0351	.7264	.4177	.1090	.8004	.4917	.1830	.5656	.9482	.3308	.7135	.0961
831	.3443	.0356	.7269	.4183	.1096	.8009	.4922	.1836	.5662	.9488	.3315	.7141	.0968
834	.3448	.0361	.7274	.4188	.1101	.8015	.4928	.1841	.5668	.9495	.3321	.7148	.0975
837	.3453	.0366	.7280	.4193	.1107	.8020	.4934	.1847	.5674	.9501	.3328	.7155	.0982
422840	69.3458	71.0371	72.7285	74.4198	76.1112	77.8026	79.4939	81.1853	84.5680	87.9507	91.3334	94.7162	98.0989
843	.3463	.0376	.7290	.4204	.1117	.8031	.4945	.1859	.5686	.9513	.3341	.7168	.0996
846	.3467	.0381	.7295	.4209	.1123	.8037	.4950	.1864	.5692	.9520	.3347	.7175	.1003
849	.3472	.0386	.7300	.4214	.1128	.8042	.4956	.1870	.5698	.9526	.3354	.7182	.1010
852	.3477	.0391	.7305	.4220	.1134	.8048	.4962	.1876	.5704	.9532	.3360	.7188	.1017
422855	69.3482	71.0396	72.7311	74.4225	76.1139	77.8053	79.4967	81.1882	84.5710	87.9538	91.3367	94.7195	98.1024
858	.3487	.0401	.7316	.4230	.1144	.8059	.4973	.1887	.5716	.9545	.3373	.7202	.1031
861	.3492	.0406	.7321	.4235	.1150	.8064	.4979	.1893	.5722	.9551	.3380	.7209	.1038
864	.3497	.0412	.7326	.4241	.1155	.8070	.4984	.1899	.5728	.9557	.3386	.7215	.1044
867	.3502	.0417	.7331	.4246	.1161	.8075	.4990	.1905	.5734	.9563	.3393	.7222	.1051
422870	69.3507	71.0422	72.7336	74.4251	76.1166	77.8081	79.4996	81.1910	84.5740	87.9570	91.3399	94.7229	98.1058
873	.3512	.0427	.7342	.4256	.1171	.8086	.5001	.1916	.5746	.9576	.3406	.7236	.1065
876	.3517	.0432	.7347	.4262	.1177	.8092	.5007	.1922	.5752	.9582	.3412	.7242	.1072
879	.3522	.0437	.7352	.4267	.1182	.8097	.5013	.1928	.5758	.9588	.3419	.7249	.1079
882	.3526	.0442	.7357	.4272	.1188	.8103	.5018	.1933	.5764	.9595	.3425	.7256	.1086
422885	69.3531	71.0447	72.7362	74.4278	76.1193	77.8108	79.5024	81.1939	84.5770	87.9601	91.3432	94.7262	98.1093
888	.3536	.0452	.7367	.4283	.1198	.8114	.5029	.1945	.5776	.9607	.3438	.7269	.1100
891	.3541	.0457	.7373	.4288	.1204	.8119	.5035	.1951	.5782	.9613	.3445	.7276	.1107
894	.3546	.0462	.7378	.4293	.1209	.8125	.5041	.1956	.5788	.9620	.3451	.7283	.1114
897	.3551	.0467	.7383	.4299	.1215	.8130	.5046	.1962	.5794	.9626	.3458	.7289	.1121
422900	69.3556	71.0472	72.7388	74.4304	76.1220	77.8136	79.5052	81.1968	84.5800	87.9632	91.3464	94.7296	98.1128

MEGACYCLES PER SECOND

HARMONICS

BASIC FREQ.	112	116	120	124	128	132	136	140	144	148	152	156	160
422900	47.3648	49.0564	50.7480	52.4396	54.1312	55.8228	57.5144	59.2060	60.8976	62.5892	64.2808	65.9724	67.6640
903	.3651	.0567	.7484	.4400	.1316	.8232	.5148	.2064	.8980	.5896	.2813	.9729	.6645
906	.3655	.0571	.7487	.4403	.1320	.8236	.5152	.2068	.8985	.5901	.2817	.9733	.6650
909	.3658	.0574	.7491	.4407	.1324	.8240	.5156	.2073	.8989	.5905	.2822	.9738	.6654
912	.3661	.0578	.7494	.4411	.1327	.8244	.5160	.2077	.8993	.5910	.2826	.9743	.6659
422915	47.3665	49.0581	50.7498	52.4415	54.1331	55.8248	57.5164	59.2081	60.8998	62.5914	64.2831	65.9747	67.6664
918	.3668	.0585	.7502	.4418	.1335	.8252	.5168	.2085	.9002	.5919	.2835	.9752	.6669
921	.3672	.0588	.7505	.4422	.1339	.8256	.5173	.2089	.9006	.5923	.2840	.9757	.6674
924	.3675	.0592	.7509	.4426	.1343	.8260	.5177	.2094	.9011	.5928	.2844	.9761	.6678
927	.3678	.0595	.7512	.4429	.1347	.8264	.5181	.2098	.9015	.5932	.2849	.9766	.6683
422930	47.3682	49.0599	50.7516	52.4433	54.1350	55.8268	57.5185	59.2102	60.9019	62.5936	64.2854	65.9771	67.6688
933	.3685	.0602	.7520	.4437	.1354	.8272	.5189	.2106	.9024	.5941	.2858	.9775	.6693
936	.3688	.0606	.7523	.4441	.1358	.8276	.5193	.2110	.9028	.5945	.2863	.9780	.6698
939	.3692	.0609	.7527	.4444	.1362	.8279	.5197	.2115	.9032	.5950	.2867	.9785	.6702
942	.3695	.0613	.7530	.4448	.1366	.8283	.5201	.2119	.9036	.5954	.2872	.9790	.6707
422945	47.3698	49.0616	50.7534	52.4452	54.1370	55.8287	57.5205	59.2123	60.9041	62.5959	64.2876	65.9794	67.6712
948	.3702	.0620	.7538	.4456	.1373	.8291	.5209	.2127	.9045	.5963	.2881	.9799	.6717
951	.3705	.0623	.7541	.4459	.1377	.8295	.5213	.2131	.9049	.5967	.2886	.9804	.6722
954	.3708	.0627	.7545	.4463	.1381	.8299	.5217	.2136	.9054	.5972	.2890	.9808	.6726
957	.3712	.0630	.7548	.4467	.1385	.8303	.5222	.2140	.9058	.5976	.2895	.9813	.6731
422960	47.3715	49.0634	50.7552	52.4470	54.1389	55.8307	57.5226	59.2144	60.9062	62.5981	64.2899	65.9818	67.6736
963	.3719	.0637	.7556	.4474	.1393	.8311	.5230	.2148	.9067	.5985	.2904	.9822	.6741
966	.3722	.0641	.7559	.4478	.1396	.8315	.5234	.2152	.9071	.5990	.2908	.9827	.6746
969	.3725	.0644	.7563	.4482	.1400	.8319	.5238	.2157	.9075	.5994	.2913	.9832	.6750
972	.3729	.0648	.7566	.4485	.1404	.8323	.5242	.2161	.9080	.5999	.2917	.9836	.6755
422975	47.3732	49.0651	50.7570	52.4489	54.1408	55.8327	57.5246	59.2165	60.9084	62.6003	64.2922	65.9841	67.6760
978	.3735	.0654	.7574	.4493	.1412	.8331	.5250	.2169	.9088	.6007	.2927	.9846	.6765
981	.3739	.0658	.7577	.4496	.1416	.8335	.5254	.2173	.9093	.6012	.2931	.9850	.6770
984	.3742	.0061	.7581	.4500	.1420	.8339	.5258	.2178	.9097	.6016	.2936	.9855	.6774
987	.3745	.0665	.7584	.4504	.1423	.8343	.5262	.2182	.9101	.6021	.2940	.9860	.6779
422990	47.3749	49.0668	50.7588	52.4508	54.1427	55.8347	57.5266	59.2186	60.9106	62.6025	64.2945	65.9864	67.6784
993	.3752	.0672	.7592	.4511	.1431	.8351	.5270	.2190	.9110	.6030	.2949	.9869	.6789
996	.3756	.0675	.7595	.4515	.1435	.8355	.5275	.2194	.9114	.6034	.2954	.9874	.6794
999	.3759	.0679	.7599	.4519	.1439	.8359	.5279	.2199	.9119	.6039	.2958	.9878	.6798
423002	.3762	.0682	.7602	.4522	.1443	.8363	.5283	.2203	.9123	.6043	.2963	.9883	.6803
423005	47.3766	49.0686	50.7606	52.4526	54.1446	55.8367	57.5287	59.2207	60.9127	62.6047	64.2968	65.9888	67.6808
008	.3769	.0689	.7610	.4530	.1450	.8371	.5291	.2211	.9132	.6052	.2972	.9892	.6813
011	.3772	.0693	.7613	.4534	.1454	.8375	.5295	.2215	.9136	.6056	.2977	.9897	.6818
014	.3776	.0696	.7617	.4537	.1458	.8378	.5299	.2220	.9140	.6061	.2981	.9902	.6822
017	.3779	.0700	.7620	.4541	.1462	.8382	.5303	.2224	.9144	.6065	.2986	.9907	.6827
423020	47.3782	49.0703	50.7624	52.4545	54.1466	55.8386	57.5307	59.2228	60.9149	62.6070	64.2990	65.9911	67.6832
023	.3786	.0707	.7628	.4549	.1469	.8390	.5311	.2232	.9153	.6074	.2995	.9916	.6837
026	.3789	.0710	.7631	.4552	.1473	.8394	.5315	.2236	.9157	.6078	.3000	.9921	.6842
029	.3792	.0714	.7635	.4556	.1477	.8398	.5319	.2241	.9162	.6083	.3004	.9925	.6846
032	.3796	.0717	.7638	.4560	.1481	.8402	.5324	.2245	.9166	.6087	.3009	.9930	.6851
423035	47.3799	49.0721	50.7642	52.4563	54.1485	55.8406	57.5328	59.2249	60.9170	62.6092	64.3013	65.9935	67.6856
038	.3803	.0724	.7646	.4567	.1489	.8410	.5332	.2253	.9175	.6096	.3018	.9939	.6861
041	.3806	.0728	.7649	.4571	.1492	.8414	.5336	.2257	.9179	.6101	.3022	.9944	.6866
044	.3809	.0731	.7653	.4575	.1496	.8418	.5340	.2262	.9183	.6105	.3027	.9949	.6870
047	.3813	.0735	.7656	.4578	.1500	.8422	.5344	.2266	.9188	.6110	.3031	.9953	.6875
423050	47.3816	49.0738	50.7660	52.4582	54.1504	55.8426	57.5348	59.2270	60.9192	62.6114	64.3036	65.9958	67.6880
053	.3819	.0741	.7664	.4586	.1508	.8430	.5352	.2274	.9196	.6118	.3041	.9963	.6885
056	.3823	.0745	.7667	.4589	.1512	.8434	.5356	.2278	.9201	.6123	.3045	.9967	.6890
059	.3826	.0748	.7671	.4593	.1516	.8438	.5360	.2283	.9205	.6127	.3050	.9972	.6894
062	.3829	.0752	.7674	.4597	.1519	.8442	.5364	.2287	.9209	.6132	.3054	.9977	.6899
423065	47.3833	49.0755	50.7678	52.4601	54.1523	55.8446	57.5368	59.2291	60.9214	62.6136	64.3059	65.9981	67.6904
068	.3836	.0759	.7682	.4604	.1527	.8450	.5372	.2295	.9218	.6141	.3063	.9986	.6909
071	.3840	.0762	.7685	.4608	.1531	.8454	.5377	.2299	.9222	.6145	.3068	.9991	.6914
074	.3843	.0766	.7689	.4612	.1535	.8458	.5381	.2304	.9227	.6150	.3072	.9995	.6918
077	.3846	.0769	.7692	.4615	.1539	.8462	.5385	.2308	.9231	.6154	.3077	66.0000	.6923
423080	47.3850	49.0773	50.7696	52.4619	54.1542	55.8466	57.5389	59.2312	60.9235	62.6158	64.3082	66.0005	67.6928
083	.3853	.0776	.7700	.4623	.1546	.8470	.5393	.2316	.9240	.6163	.3086	.0009	.6933
086	.3856	.0780	.7703	.4627	.1550	.8474	.5397	.2320	.9244	.6167	.3091	.0014	.6938
089	.3860	.0783	.7707	.4630	.1554	.8477	.5401	.2325	.9248	.6172	.3095	.0019	.6942
092	.3863	.0787	.7710	.4634	.1558	.8481	.5405	.2329	.9252	.6176	.3100	.0024	.6947
423095	47.3866	49.0790	50.7714	52.4638	54.1562	55.8485	57.5409	59.2333	60.9257	62.6181	64.3104	66.0028	67.6952
098	.3870	.0794	.7718	.4642	.1565	.8489	.5413	.2337	.9261	.6185	.3109	.0033	.6957
101	.3873	.0797	.7721	.4645	.1569	.8493	.5417	.2341	.9265	.6189	.3114	.0038	.6962
104	.3876	.0801	.7725	.4649	.1573	.8497	.5421	.2346	.9270	.6194	.3118	.0042	.6966
107	.3880	.0804	.7728	.4653	.1577	.8501	.5426	.2350	.9274	.6198	.3123	.0047	.6971
423110	47.3883	49.0808	50.7732	52.4656	54.1581	55.8505	57.5430	59.2354	60.9278	62.6203	64.3127	66.0052	67.6976
113	.3887	.0811	.7736	.4660	.1585	.8509	.5434	.2358	.9283	.6207	.3132	.0056	.6981
116	.3890	.0815	.7739	.4664	.1588	.8513	.5438	.2362	.9287	.6212	.3136	.0061	.6986
119	.3893	.0818	.7743	.4668	.1592	.8517	.5442	.2367	.9291	.6216	.3141	.0066	.6990
122	.3897	.0822	.7746	.4671	.1596	.8521	.5446	.2371	.9296	.6221	.3145	.0070	.6995
423125	47.3900	49.0825	50.7750	52.4675	54.1600	55.8525	57.5450	59.2375	60.9300	62.6225	64.3150	66.0075	67.7000
128	.3903	.0828	.7754	.4679	.1604	.8529	.5454	.2379	.9304	.6229	.3155	.0080	.7005
131	.3907	.0832	.7757	.4682	.1608	.8533	.5458	.2383	.9309	.6234	.3159	.0084	.7010
134	.3910	.0835	.7761	.4686	.1612	.8537	.5462	.2388	.9313	.6238	.3164	.0089	.7014
137	.3913	.0839	.7764	.4690	.1615	.8541	.5466	.2392	.9317	.6243	.3168	.0094	.7019
423140	47.3917	49.0842	50.7768	52.4694	54.1619	55.8545	57.5470	59.2396	60.9322	62.6247	64.3173	66.0098	67.7024
143	.3920	.0846	.7772	.4697	.1623	.8549	.5474	.2400	.9326	.6252	.3177	.0103	.7029
146	.3924	.0849	.7775	.4701	.1627	.8553	.5479	.2404	.9330	.6256	.3182	.0108	.7034
149	.3927	.0853	.7779	.4705	.1631	.8557	.5483	.2409	.9335	.6261	.3186	.0112	.7038
152	.3930	.0856	.7782	.4708	.1635	.8561	.5487	.2413	.9339	.6265	.3191	.0117	.7043
423155	47.3934	49.0860	50.7786	52.4712	54.1638	55.8565	57.5491	59.2417	60.9343	62.2669	64.3196	66.0122	67.7048
158	.3937	.0863	.7790	.4716	.1642	.8569	.5495	.2421	.9348	.6274	.3200	.0126	.7053
161	.3940	.0867	.7793	.4720	.1646	.8573	.5499	.2425	.9352	.6278	.3205	.0131	.7058
164	.3944	.0870	.7797	.4723	.1650	.8576	.5503	.2430	.9356	.6283	.3209	.0136	.7062
167	.3947	.0874	.7800	.4727	.1654	.8580	.5507	.2434	.9360	.6287	.3214	.0141	.7067
423170	47.3950	49.0877	50.7804	52.4731	54.1658	55.8584	57.5511	59.2438	60.9365	62.6292	64.3218	66.0145	67.7072
173	.3954	.0881	.7808	.4735	.1661	.8588	.5515	.2442	.9369	.6296	.3223	.0150	.7077
176	.3957	.0884	.7811	.4738	.1665	.8592	.5519	.2446	.9373	.6300	.3228	.0155	.7082
179	.3960	.0888	.7815	.4742	.1669	.8596	.5523	.2451	.9378	.6305	.3232	.0159	.7086
182	.3964	.0891	.7818	.4746	.1673	.8600	.5528	.2455	.9382	.6309	.3237	.0164	.7091
423185	47.3967	49.0895	50.7822	52.4749	54.1677	55.8604	57.5532	59.2459	60.9386	62.6314	64.3241	66.0169	67.7096
188	.3971	.0898	.7826	.4753	.1681	.8608	.5536	.2463	.9391	.6318	.3246	.0173	.7101
191	.3974	.0902	.7829	.4757	.1684	.8612	.5540	.2467	.9395	.6323	.3250	.0178	.7106
194	.3977	.0905	.7833	.4761	.1688	.8616	.5544	.2472	.9399	.6327	.3255	.0183	.7110
197	.3981	.0909	.7836	.4764	.1692	.8620	.5548	.2476	.9404	.6332	.3259	.0187	.7115
423200	47.3984	49.0912	50.7840	52.4768	54.1696	55.8624	57.5552	59.2480	60.9408	62.6336	64.3264	66.0192	67.7120

MEGACYCLES PER SECOND

HARMONICS

BASIC FREQ.	164	168	172	176	180	184	188	192	200	208	216	224	232
422900	69.3556	71.0472	72.7388	74.4304	76.1220	77.8136	79.5052	81.1968	84.5800	87.9632	91.3464	94.7296	98.1128
903	.3561	.0477	.7393	.4309	.1225	.8142	.5058	.1974	.5806	.9638	.3470	.7303	.1135
906	.3566	.0482	.7398	.4315	.1231	.8147	.5063	.1980	.5812	.9644	.3477	.7309	.1142
909	.3571	.0487	.7403	.4320	.1236	.8153	.5069	.1985	.5818	.9651	.3483	.7316	.1149
912	.3576	.0492	.7409	.4325	.1242	.8158	.5075	.1991	.5824	.9657	.3490	.7323	.1156
422915	69.3581	71.0497	72.7414	74.4330	76.1247	77.8164	79.5080	81.1997	84.5830	87.9663	91.3496	94.7330	98.1163
918	.3586	.0502	.7419	.4336	.1252	.8169	.5086	.2003	.5836	.9669	.3503	.7336	.1170
921	.3590	.0507	.7424	.4341	.1258	.8175	.5091	.2008	.5842	.9676	.3509	.7343	.1177
924	.3595	.0512	.7429	.4346	.1263	.8180	.5097	.2014	.5848	.9682	.3516	.7350	.1184
927	.3600	.0517	.7434	.4352	.1269	.8186	.5103	.2020	.5854	.9688	.3522	.7356	.1191
422930	69.3605	71.0522	72.7440	74.4357	76.1274	77.8191	79.5108	81.2026	84.5860	87.9694	91.3529	94.7363	98.1198
933	.3610	.0527	.7445	.4362	.1279	.8197	.5114	.2031	.5866	.9701	.3535	.7370	.1205
936	.3615	.0532	.7450	.4367	.1285	.8202	.5120	.2037	.5872	.9707	.3542	.7377	.1212
939	.3620	.0538	.7455	.4373	.1290	.8208	.5125	.2043	.5878	.9713	.3548	.7383	.1218
942	.3625	.0543	.7460	.4378	.1296	.8213	.5131	.2049	.5884	.9719	.3555	.7390	.1225
422945	69.3630	71.0548	72.7465	74.4383	76.1301	77.8219	79.5137	81.2054	84.5890	87.9726	91.3561	94.7397	98.1232
948	.3635	.0553	.7471	.4388	.1306	.8224	.5142	.2060	.5896	.9732	.3568	.7404	.1239
951	.3640	.0558	.7476	.4394	.1312	.8230	.5148	.2066	.5902	.9738	.3574	.7410	.1246
954	.3645	.0563	.7481	.4399	.1317	.8235	.5154	.2072	.5908	.9744	.3581	.7417	.1253
957	.3649	.0568	.7486	.4404	.1323	.8241	.5159	.2077	.5914	.9751	.3587	.7424	.1260
422960	69.3654	71.0573	72.7491	74.4410	76.1328	77.8246	79.5165	81.2083	84.5920	87.9757	91.3594	94.7430	98.1267
963	.3659	.0578	.7496	.4415	.1333	.8252	.5170	.2089	.5926	.9763	.3600	.7437	.1274
966	.3664	.0583	.7502	.4420	.1339	.8257	.5176	.2095	.5932	.9769	.3607	.7444	.1281
969	.3669	.0588	.7507	.4425	.1344	.8263	.5182	.2100	.5938	.9776	.3613	.7451	.1288
972	.3674	.0593	.7512	.4431	.1350	.8268	.5187	.2106	.5944	.9782	.3620	.7457	.1295
422975	69.3679	71.0598	72.7517	74.4436	76.1355	77.8274	79.5193	81.2112	84.5950	87.9788	91.3626	94.7464	98.1302
978	.3684	.0603	.7522	.4441	.1360	.8280	.5199	.2118	.5956	.9794	.3632	.7471	.1309
981	.3689	.0608	.7527	.4447	.1366	.8285	.5204	.2124	.5962	.9800	.3639	.7477	.1316
984	.3694	.0613	.7532	.4452	.1371	.8291	.5210	.2129	.5968	.9807	.3645	.7484	.1323
987	.3699	.0618	.7538	.4457	.1377	.8296	.5216	.2135	.5974	.9813	.3652	.7491	.1330
422990	69.3704	71.0623	72.7543	74.4462	76.1382	77.8302	79.5221	81.2141	84.5980	87.9819	91.3658	94.7498	98.1337
993	.3709	.0628	.7548	.4468	.1387	.8307	.5227	.2147	.5986	.9825	.3665	.7504	.1344
996	.3713	.0633	.7553	.4473	.1393	.8313	.5232	.2152	.5992	.9832	.3671	.7511	.1351
999	.3718	.0638	.7558	.4478	.1398	.8318	.5238	.2158	.5998	.9838	.3678	.7518	.1358
423002	.3723	.0643	.7563	.4484	.1404	.8324	.5244	.2164	.6004	.9844	.3684	.7524	.1365
423005	69.3728	71.0648	72.7569	74.4489	76.1409	77.8329	79.5249	81.2170	84.6010	87.9850	91.3691	94.7531	98.1372
008	.3733	.0653	.7574	.4494	.1414	.8335	.5255	.2175	.6016	.9857	.3697	.7538	.1379
011	.3738	.0658	.7579	.4499	.1420	.8340	.5261	.2181	.6022	.9863	.3704	.7545	.1386
014	.3743	.0664	.7584	.4505	.1425	.8346	.5266	.2187	.6028	.9869	.3710	.7551	.1392
017	.3748	.0669	.7589	.4510	.1431	.8351	.5272	.2193	.6034	.9875	.3717	.7558	.1399
423020	69.3753	71.0674	72.7594	74.4515	76.1436	77.8357	79.5278	81.2198	84.6040	87.9882	91.3723	94.7565	98.1406
023	.3758	.0679	.7600	.4520	.1441	.8362	.5283	.2204	.6046	.9888	.3730	.7572	.1413
026	.3763	.0684	.7605	.4526	.1447	.8368	.5289	.2210	.6052	.9894	.3736	.7578	.1420
029	.3768	.0689	.7610	.4531	.1452	.8373	.5295	.2216	.6058	.9900	.3743	.7585	.1427
032	.3772	.0694	.7615	.4536	.1458	.8379	.5300	.2221	.6064	.9907	.3749	.7592	.1434
423035	69.3777	71.0699	72.7620	74.4542	76.1463	77.8384	79.5306	81.2227	84.6070	87.9913	91.3756	94.7598	98.1441
038	.3782	.0704	.7625	.4547	.1468	.8390	.5311	.2233	.6076	.9919	.3762	.7605	.1448
041	.3787	.0709	.7631	.4552	.1474	.8395	.5317	.2239	.6082	.9925	.3769	.7612	.1455
044	.3792	.0714	.7636	.4557	.1479	.8401	.5323	.2244	.6088	.9932	.3775	.7619	.1462
047	.3797	.0719	.7641	.4563	.1485	.8406	.5328	.2250	.6094	.9938	.3782	.7625	.1469
423050	69.3802	71.0724	72.7646	74.4568	76.1490	77.8412	79.5334	81.2256	84.6100	87.9944	91.3788	94.7632	98.1476
053	.3807	.0729	.7651	.4573	.1495	.8418	.5340	.2262	.6106	.9950	.3794	.7639	.1483
056	.3812	.0734	.7656	.4579	.1501	.8423	.5345	.2268	.6112	.9956	.3801	.7645	.1490
059	.3817	.0739	.7661	.4584	.1506	.8429	.5351	.2273	.6118	.9963	.3807	.7652	.1497
062	.3822	.0744	.7667	.4589	.1512	.8434	.5357	.2279	.6124	.9969	.3814	.7659	.1504
423065	69.3827	71.0749	72.7672	74.4594	76.1517	77.8440	79.5362	81.2285	84.6130	87.9975	91.3820	94.7666	98.1511
068	.3832	.0754	.7677	.4600	.1522	.8445	.5368	.2291	.6136	.9981	.3827	.7672	.1518
071	.3836	.0759	.7682	.4605	.1528	.8451	.5373	.2296	.6142	.9988	.3833	.7679	.1525
074	.3841	.0764	.7687	.4610	.1533	.8456	.5379	.2302	.6148	.9994	.3840	.7686	.1532
077	.3846	.0769	.7692	.4616	.1539	.8462	.5385	.2308	.6154	88.0000	.3846	.7692	.1539
423080	69.3851	71.0774	72.7698	74.4621	76.1544	77.8467	79.5390	81.2314	84.6160	88.0006	91.3853	94.7699	98.1546
083	.3856	.0779	.7703	.4626	.1549	.8473	.5396	.2319	.6166	.0013	.3859	.7706	.1553
086	.3861	.0784	.7708	.4631	.1555	.8478	.5402	.2325	.6172	.0019	.3866	.7713	.1560
089	.3866	.0790	.7713	.4637	.1560	.8484	.5407	.2331	.6178	.0025	.3872	.7719	.1566
092	.3871	.0795	.7718	.4642	.1566	.8489	.5413	.2337	.6184	.0031	.3879	.7726	.1573
423095	69.3876	71.0800	72.7723	74.4647	76.1571	77.8495	79.5419	81.2342	84.6190	88.0038	91.3885	94.7733	98.1580
098	.3881	.0805	.7729	.4652	.1576	.8500	.5424	.2348	.6196	.0044	.3892	.7740	.1587
101	.3886	.0810	.7734	.4658	.1582	.8506	.5430	.2354	.6202	.0050	.3898	.7746	.1594
104	.3891	.0815	.7739	.4663	.1587	.8511	.5436	.2360	.6208	.0056	.3905	.7753	.1601
107	.3895	.0820	.7744	.4668	.1593	.8517	.5441	.2365	.6214	.0063	.3911	.7760	.1608
423110	69.3900	71.0825	72.7749	74.4674	76.1598	77.8522	79.5447	81.2371	84.6220	88.0069	91.3918	94.7766	98.1615
113	.3905	.0830	.7754	.4679	.1603	.8528	.5452	.2377	.6226	.0075	.3924	.7773	.1622
116	.3910	.0835	.7760	.4684	.1609	.8533	.5458	.2383	.6232	.0081	.3931	.7780	.1629
119	.3915	.0840	.7765	.4689	.1614	.8539	.5464	.2388	.6238	.0088	.3937	.7787	.1636
122	.3920	.0845	.7770	.4695	.1620	.8544	.5469	.2394	.6244	.0094	.3944	.7793	.1643
423125	69.3925	71.0850	72.7775	74.4700	76.1625	77.8550	79.5475	81.2400	84.6250	88.0100	91.3950	94.7800	98.1650
128	.3930	.0855	.7780	.4705	.1630	.8556	.5481	.2406	.6256	.0106	.3956	.7807	.1657
131	.3935	.0860	.7785	.4711	.1636	.8561	.5486	.2412	.6262	.0112	.3963	.7813	.1664
134	.3940	.0865	.7790	.4716	.1641	.8567	.5492	.2417	.6268	.0119	.3969	.7820	.1671
137	.3945	.0870	.7796	.4721	.1647	.8572	.5498	.2423	.6274	.0125	.3976	.7827	.1678
423140	69.3950	71.0875	72.7801	74.4726	76.1652	77.8578	79.5503	81.2429	84.6280	88.0131	91.3982	94.7834	98.1685
143	.3955	.0880	.7806	.4732	.1657	.8583	.5509	.2435	.6286	.0137	.3989	.7840	.1692
146	.3959	.0885	.7811	.4737	.1663	.8589	.5514	.2440	.6292	.0144	.3995	.7847	.1699
149	.3964	.0890	.7816	.4742	.1668	.8594	.5520	.2446	.6298	.0150	.4002	.7854	.1706
152	.3969	.0895	.7821	.4748	.1674	.8600	.5526	.2452	.6304	.0156	.4008	.7860	.1713
423155	69.3974	71.0900	72.7827	74.4753	76.1679	77.8605	79.5531	81.2458	84.6310	88.0162	91.4015	94.7867	98.1720
158	.3979	.0905	.7832	.4758	.1684	.8611	.5537	.2463	.6316	.0169	.4021	.7874	.1727
161	.3984	.0910	.7837	.4763	.1690	.8616	.5543	.2469	.6322	.0175	.4028	.7881	.1734
164	.3989	.0916	.7842	.4769	.1695	.8622	.5548	.2475	.6328	.0181	.4034	.7887	.1740
167	.3994	.0921	.7847	.4774	.1701	.8627	.5554	.2481	.6334	.0187	.4041	.7894	.1747
423170	69.3999	71.0926	72.7852	74.4779	76.1706	77.8633	79.5560	81.2486	84.6340	88.0194	91.4047	94.7901	98.1754
173	.4004	.0931	.7858	.4784	.1711	.8638	.5565	.2492	.6346	.0200	.4054	.7908	.1761
176	.4009	.0936	.7863	.4790	.1717	.8644	.5571	.2498	.6352	.0206	.4060	.7914	.1768
179	.4014	.0941	.7868	.4795	.1722	.8649	.5577	.2504	.6358	.0212	.4067	.7921	.1775
182	.4018	.0946	.7873	.4800	.1728	.8655	.5582	.2509	.6364	.0219	.4073	.7928	.1782
423185	69.4023	71.0951	72.7878	74.4806	76.1733	77.8660	79.5588	81.2515	84.6370	88.0225	91.4080	94.7934	98.1789
188	.4028	.0956	.7883	.4811	.1738	.8666	.5593	.2521	.6376	.0231	.4086	.7941	.1796
191	.4033	.0961	.7889	.4816	.1744	.8671	.5599	.2527	.6382	.0237	.4093	.7948	.1803
194	.4038	.0966	.7894	.4821	.1749	.8677	.5605	.2532	.6388	.0244	.4099	.7955	.1810
197	.4043	.0971	.7899	.4827	.1755	.8682	.5610	.2538	.6394	.0250	.4106	.7961	.1817
423200	69.4048	71.0976	72.7904	74.4832	76.1760	77.8688	79.5616	81.2544	84.6400	88.0256	91.4112	94.7968	98.1824

MEGACYCLES PER SECOND

H A R M O N I C S

BASIC FREQ.	112	116	120	124	128	132	136	140	144	148	152	156	160
423200	47.3984	49.0912	50.7840	52.4768	54.1696	55.8624	57.5552	59.2480	60.9408	62.6336	64.3264	66.0192	67.7120
203	.3987	.0915	.7844	.4772	.1700	.8628	.5556	.2484	.9412	.6340	.3269	.0197	.7125
206	.3991	.0919	.7847	.4775	.1704	.8632	.5560	.2488	.9417	.6345	.3273	.0201	.7130
209	.3994	.0922	.7851	.4779	.1708	.8636	.5564	.2493	.9421	.6349	.3278	.0206	.7134
212	.3997	.0926	.7854	.4783	.1711	.8640	.5568	.2497	.9425	.6354	.3282	.0211	.7139
423215	47.4001	49.0929	50.7858	52.4787	54.1715	55.8644	57.5572	59.2501	60.9430	62.6358	64.3287	66.0215	67.7144
218	.4004	.0933	.7862	.4790	.1719	.8648	.5576	.2505	.9434	.6363	.3291	.0220	.7149
221	.4008	.0936	.7865	.4794	.1723	.8652	.5581	.2509	.9438	.6367	.3296	.0225	.7154
224	.4011	.0940	.7869	.4798	.1727	.8656	.5585	.2514	.9443	.6372	.3300	.0229	.7158
227	.4014	.0943	.7872	.4801	.1731	.8660	.5589	.2518	.9447	.6376	.3305	.0234	.7163
423230	47.4018	49.0947	50.7876	52.4805	54.1734	55.8664	57.5593	59.2522	60.9451	62.6380	64.3310	66.0239	67.7168
233	.4021	.0950	.7880	.4809	.1738	.8668	.5597	.2526	.9456	.6385	.3314	.0243	.7173
236	.4024	.0954	.7883	.4813	.1742	.8672	.5601	.2530	.9460	.6389	.3319	.0248	.7178
239	.4028	.0957	.7887	.4816	.1746	.8675	.5605	.2535	.9464	.6394	.3323	.0253	.7182
242	.4031	.0961	.7890	.4820	.1750	.8679	.5609	.2539	.9468	.6398	.3328	.0258	.7187
423245	47.4034	49.0964	50.7894	52.4824	54.1754	55.8683	57.5613	59.2543	60.9473	62.6403	64.3332	66.0262	67.7192
248	.4038	.0968	.7898	.4828	.1757	.8687	.5617	.2547	.9477	.6407	.3337	.0267	.7197
251	.4041	.0971	.7901	.4831	.1761	.8691	.5621	.2551	.9481	.6411	.3342	.0272	.7202
254	.4044	.0975	.7905	.4835	.1765	.8695	.5625	.2556	.9486	.6416	.3346	.0276	.7206
257	.4048	.0978	.7908	.4839	.1769	.8699	.5630	.2560	.9490	.6420	.3351	.0281	.7211
423260	47.4051	49.0982	50.7912	52.4842	54.1773	55.8703	57.5634	59.2564	60.9494	62.6425	64.3355	66.0286	67.7216
263	.4055	.0985	.7916	.4846	.1777	.8707	.5638	.2568	.9499	.6429	.3360	.0290	.7221
266	.4058	.0989	.7919	.4850	.1780	.8711	.5642	.2572	.9503	.6434	.3364	.0295	.7226
269	.4061	.0992	.7923	.4854	.1784	.8715	.5646	.2577	.9507	.6438	.3369	.0300	.7230
272	.4065	.0996	.7926	.4857	.1788	.8719	.5650	.2581	.9512	.6443	.3373	.0304	.7235
423275	47.4068	49.0999	50.7930	52.4861	54.1792	55.8723	57.5654	59.2585	60.9516	62.6447	64.3378	65.0309	67.7240
278	.4071	.1002	.7934	.4865	.1796	.8727	.5658	.2589	.9520	.6451	.3383	.0314	.7245
281	.4075	.1006	.7937	.4868	.1800	.8731	.5662	.2593	.9525	.6456	.3387	.0318	.7250
284	.4078	.1009	.7941	.4872	.1804	.8735	.5666	.2598	.9529	.6460	.3392	.0323	.7254
287	.4081	.1013	.7944	.4876	.1807	.8739	.5670	.2602	.9533	.6465	.3396	.0328	.7259
423290	47.4085	49.1016	50.7948	52.4880	54.1811	55.8743	57.5674	59.2606	60.9538	62.6469	64.3401	66.0332	67.7264
293	.4088	.1020	.7952	.4883	.1815	.8747	.5678	.2610	.9542	.6474	.3405	.0337	.7269
296	.4092	.1023	.7955	.4887	.1819	.8751	.5683	.2614	.9546	.6478	.3410	.0342	.7274
299	.4095	.1027	.7959	.4891	.1823	.8755	.5687	.2619	.9551	.6483	.3414	.0346	.7278
302	.4098	.1030	.7962	.4894	.1827	.8759	.5691	.2623	.9555	.6487	.3419	.0351	.7283
423305	47.4102	49.1034	50.7966	52.4898	54.1830	55.8763	57.5695	59.2627	60.9559	62.6491	64.3424	66.0356	67.7288
308	.4105	.1037	.7970	.4902	.1834	.8767	.5699	.2631	.9564	.6496	.3428	.0360	.7293
311	.4108	.1041	.7973	.4906	.1838	.8771	.5703	.2635	.9568	.6500	.3433	.0365	.7298
314	.4112	.1044	.7977	.4909	.1842	.8774	.5707	.2640	.9572	.6505	.3437	.0370	.7302
317	.4115	.1048	.7980	.4913	.1846	.8778	.5711	.2644	.9576	.6509	.3442	.0375	.7307
423320	47.4118	49.1051	50.7984	52.4917	54.1850	55.8782	57.5715	59.2648	60.9581	62.6514	64.3446	66.0379	67.7312
323	.4122	.1055	.7988	.4921	.1853	.8786	.5719	.2652	.9585	.6518	.3451	.0384	.7317
326	.4125	.1058	.7991	.4924	.1857	.8790	.5723	.2656	.9589	.6522	.3456	.0389	.7322
329	.4128	.1062	.7995	.4928	.1861	.8794	.5727	.2661	.9594	.6527	.3460	.0393	.7326
332	.4132	.1065	.7998	.4932	.1865	.8798	.5732	.2665	.9598	.6531	.3465	.0398	.7331
423335	47.4135	49.1069	50.8002	52.4935	54.1869	55.8802	57.5736	59.2669	60.9602	62.6536	64.3469	66.0403	67.7336
338	.4139	.1072	.8006	.4939	.1873	.8806	.5740	.2673	.9607	.6540	.3474	.0407	.7341
341	.4142	.1076	.8009	.4943	.1876	.8810	.5744	.2677	.9611	.6545	.3478	.0412	.7346
344	.4145	.1079	.8013	.4947	.1880	.8814	.5748	.2682	.9615	.6549	.3483	.0417	.7350
347	.4149	.1083	.8016	.4950	.1884	.8818	.5752	.2686	.9620	.6554	.3487	.0421	.7355
423350	47.4152	49.1086	50.8020	52.4954	54.1888	55.8822	57.5756	59.2690	60.9624	62.6558	64.3492	66.0426	67.7360
353	.4155	.1089	.8024	.4958	.1892	.8826	.5760	.2694	.9628	.6562	.3497	.0431	.7365
356	.4159	.1093	.8027	.4961	.1896	.8830	.5764	.2698	.9633	.6567	.3501	.0435	.7370
359	.4162	.1096	.8031	.4965	.1900	.8834	.5768	.2703	.9637	.6571	.3506	.0440	.7374
362	.4165	.1100	.8034	.4969	.1903	.8838	.5772	.2707	.9641	.6576	.3510	.0445	.7379
423365	47.4169	49.1103	50.8038	52.4973	54.1907	55.8842	57.5776	59.2711	60.9646	62.6580	64.3515	66.0449	67.7384
368	.4172	.1107	.8042	.4976	.1911	.8846	.5780	.2715	.9650	.6585	.3519	.0454	.7389
371	.4176	.1110	.8045	.4980	.1915	.8850	.5785	.2719	.9654	.6589	.3524	.0459	.7394
374	.4179	.1114	.8049	.4984	.1919	.8854	.5789	.2724	.9659	.6594	.3528	.0463	.7398
377	.4182	.1117	.8052	.4987	.1923	.8858	.5793	.2728	.9663	.6598	.3533	.0468	.7403
423380	47.4186	49.1121	50.8056	52.4991	54.1926	55.8862	57.5797	59.2732	60.9667	62.6602	64.3538	66.0473	67.7408
383	.4189	.1124	.8060	.4995	.1930	.8866	.5801	.2736	.9672	.6607	.3542	.0477	.7413
386	.4192	.1128	.8063	.4999	.1934	.8870	.5805	.2740	.9676	.6611	.3547	.0482	.7418
389	.4196	.1131	.8067	.5002	.1938	.8873	.5809	.2745	.9680	.6616	.3551	.0487	.7422
392	.4199	.1135	.8070	.5006	.1942	.8877	.5813	.2749	.9684	.6620	.3556	.0492	.7427
423395	47.4202	49.1138	50.8074	52.5010	54.1946	55.8881	57.5817	59.2753	60.9689	62.6625	64.3560	66.0496	67.7432
398	.4206	.1142	.8078	.5014	.1949	.8885	.5821	.2757	.9693	.6629	.3565	.0501	.7437
401	.4209	.1145	.8081	.5017	.1953	.8889	.5825	.2761	.9697	.6633	.3570	.0506	.7442
404	.4212	.1149	.8085	.5021	.1957	.8893	.5829	.2766	.9702	.6638	.3574	.0510	.7446
407	.4216	.1152	.8088	.5025	.1961	.8897	.5834	.2770	.9706	.6642	.3579	.0515	.7451
423410	47.4219	49.1156	50.8092	52.5028	54.1965	55.8901	57.5838	59.2774	60.9710	62.6647	64.3583	66.0520	67.7456
413	.4223	.1159	.8096	.5032	.1969	.8905	.5842	.2778	.9715	.6651	.3588	.0524	.7461
416	.4226	.1163	.8099	.5036	.1972	.8909	.5846	.2782	.9719	.6656	.3592	.0529	.7466
419	.4229	.1166	.8103	.5040	.1976	.8913	.5850	.2787	.9723	.6660	.3597	.0534	.7470
422	.4233	.1170	.8106	.5043	.1980	.8917	.5854	.2791	.9728	.6665	.3601	.0538	.7475
423425	47.4236	49.1173	50.8110	52.5047	54.1984	55.8921	57.5858	59.2795	60.9732	62.6669	64.3606	66.0543	67.7480
428	.4239	.1176	.8114	.5051	.1988	.8925	.5862	.2799	.9736	.6673	.3611	.0548	.7485
431	.4243	.1180	.8117	.5054	.1992	.8929	.5866	.2803	.9741	.6678	.3615	.0552	.7490
434	.4246	.1183	.8121	.5058	.1996	.8933	.5870	.2808	.9745	.6682	.3620	.0557	.7494
437	.4249	.1187	.8124	.5062	.1999	.8937	.5874	.2812	.9749	.6687	.3624	.0562	.7499
423440	47.4253	49.1190	50.8128	52.5066	54.2003	55.8941	57.5878	59.2816	60.9754	62.6691	64.3629	66.0566	67.7504
443	.4256	.1194	.8132	.5069	.2007	.8945	.5882	.2820	.9758	.6696	.3633	.0571	.7509
446	.4260	.1197	.8135	.5073	.2011	.8949	.5887	.2824	.9762	.6700	.3638	.0576	.7514
449	.4263	.1201	.8139	.5077	.2015	.8953	.5891	.2829	.9767	.6705	.3642	.0580	.7518
452	.4266	.1204	.8142	.5080	.2019	.8957	.5895	.2833	.9771	.6709	.3647	.0585	.7523
423455	47.4270	49.1208	50.8146	52.5084	54.2022	55.8961	57.5899	59.2837	60.9775	62.6713	64.3652	66.0590	67.7528
458	.4273	.1211	.8150	.5088	.2026	.8965	.5903	.2841	.9780	.6718	.3656	.0594	.7533
461	.4276	.1215	.8153	.5092	.2030	.8969	.5907	.2845	.9784	.6722	.3661	.0599	.7538
464	.4280	.1218	.8157	.5095	.2034	.8972	.5911	.2850	.9788	.6727	.3665	.0604	.7542
467	.4283	.1222	.8160	.5099	.2038	.8976	.5915	.2854	.9792	.6731	.3670	.0609	.7547
423470	47.4286	49.1225	50.8164	52.5103	54.2042	55.8980	57.5919	59.2858	60.9797	62.6736	64.3674	66.0613	67.7552
473	.4290	.1229	.8168	.5107	.2045	.8984	.5923	.2862	.9801	.6740	.3679	.0618	.7557
476	.4293	.1232	.8171	.5110	.2049	.8988	.5927	.2866	.9805	.6744	.3684	.0623	.7562
479	.4296	.1236	.8175	.5114	.2053	.8992	.5931	.2871	.9810	.6749	.3688	.0627	.7566
482	.4300	.1239	.8178	.5118	.2057	.8996	.5936	.2875	.9814	.6753	.3693	.0632	.7571
423485	47.4303	49.1243	50.8182	52.5121	54.2061	55.9000	57.5940	59.2879	60.9818	62.6758	64.3697	66.0637	67.7576
488	.4307	.1246	.8186	.5125	.2065	.9004	.5944	.2883	.9823	.6762	.3702	.0641	.7581
491	.4310	.1250	.8189	.5129	.2068	.9008	.5948	.2887	.9827	.6767	.3706	.0646	.7586
494	.4313	.1253	.8193	.5133	.2072	.9012	.5952	.2892	.9831	.6771	.3711	.0651	.7590
497	.4317	.1257	.8196	.5136	.2076	.9016	.5956	.2896	.9836	.6776	.3715	.0655	.7595
423500	47.4320	49.1260	50.8200	52.5140	54.2080	55.9020	57.5960	59.2900	60.9840	62.6780	64.3720	66.0660	67.7600

MEGACYCLES PER SECOND

H A R M O N I C S

BASIC FREQ.	164	168	172	176	180	184	188	192	200	208	216	224	232
423200	69.4048	71.0976	72.7904	74.4832	76.1760	77.8688	79.5616	81.2544	84.6400	88.0256	91.4112	94.7968	98.1824
203	.4053	.0981	.7909	.4837	.1765	.8694	.5622	.2550	.6406	.0262	.4118	.7975	.1831
206	.4058	.0986	.7914	.4843	.1771	.8699	.5627	.2556	.6412	.0268	.4125	.7981	.1838
209	.4063	.0991	.7919	.4848	.1776	.8705	.5633	.2561	.6418	.0275	.4131	.7988	.1845
212	.4068	.0996	.7925	.4853	.1782	.8710	.5639	.2567	.6424	.0281	.4138	.7995	.1852
423215	69.4073	71.1001	72.7930	74.4858	76.1787	77.8716	79.5644	81.2573	84.6430	88.0287	91.4144	94.8002	98.1859
218	.4078	.1006	.7935	.4864	.1792	.8721	.5650	.2579	.6436	.0293	.4151	.8008	.1866
221	.4082	.1011	.7940	.4869	.1798	.8727	.5655	.2584	.6442	.0300	.4157	.8015	.1873
224	.4087	.1016	.7945	.4874	.1803	.8732	.5661	.2590	.6448	.0306	.4164	.8022	.1880
227	.4092	.1021	.7950	.4880	.1809	.8738	.5667	.2596	.6454	.0312	.4170	.8028	.1887
423230	69.4097	71.1026	72.7956	74.4885	76.1814	77.8743	79.5672	81.2602	84.6460	88.0318	91.4177	94.8035	98.1894
233	.4102	.1031	.7961	.4890	.1819	.8749	.5678	.2607	.6466	.0325	.4183	.8042	.1901
236	.4107	.1036	.7966	.4895	.1825	.8754	.5684	.2613	.6472	.0331	.4190	.8049	.1908
239	.4112	.1042	.7971	.4901	.1830	.8760	.5689	.2619	.6478	.0337	.4196	.8055	.1914
242	.4117	.1047	.7976	.4906	.1836	.8765	.5695	.2625	.6484	.0343	.4203	.8062	.1921
423245	69.4122	71.1052	72.7981	74.4911	76.1841	77.8771	79.5701	81.2630	84.6490	88.0350	91.4209	94.8069	98.1928
248	.4127	.1057	.7987	.4916	.1846	.8776	.5706	.2636	.6496	.0356	.4216	.8076	.1935
251	.4132	.1062	.7992	.4922	.1852	.8782	.5712	.2642	.6502	.0362	.4222	.8082	.1942
254	.4137	.1067	.7997	.4927	.1857	.8787	.5718	.2648	.6508	.0368	.4229	.8089	.1949
257	.4141	.1072	.8002	.4932	.1863	.8793	.5723	.2653	.6514	.0375	.4235	.8096	.1956
423260	69.4146	71.1077	72.8007	74.4938	76.1868	77.8798	79.5729	81.2659	84.6520	88.0381	91.4242	94.8102	98.1963
263	.4151	.1082	.8012	.4943	.1873	.8804	.5734	.2665	.6526	.0387	.4248	.8109	.1970
266	.4156	.1087	.8018	.4948	.1879	.8809	.5740	.2671	.6532	.0393	.4255	.8116	.1977
269	.4161	.1092	.8023	.4953	.1884	.8815	.5746	.2676	.6538	.0400	.4261	.8123	.1984
272	.4166	.1097	.8028	.4959	.1890	.8820	.5751	.2682	.6544	.0406	.4268	.8129	.1991
423275	69.4171	71.1102	72.8033	74.4964	76.1895	77.8826	79.5757	81.2688	84.6550	88.0412	91.4274	94.8136	98.1998
278	.4176	.1107	.8038	.4969	.1900	.8832	.5763	.2694	.6556	.0418	.4280	.8143	.2005
281	.4181	.1112	.8043	.4975	.1906	.8837	.5768	.2700	.6562	.0424	.4287	.8149	.2012
284	.4186	.1117	.8048	.4980	.1911	.8843	.5774	.2705	.6568	.0431	.4293	.8156	.2019
287	.4191	.1122	.8054	.4985	.1917	.8848	.5780	.2711	.6574	.0437	.4300	.8163	.2026
423290	69.4196	71.1127	72.8059	74.4990	76.1922	77.8854	79.5785	81.2717	84.6580	88.0443	91.4306	94.8170	98.2033
293	.4201	.1132	.8064	.4996	.1927	.8859	.5791	.2723	.6586	.0449	.4313	.8176	.2040
296	.4205	.1137	.8069	.5001	.1933	.8865	.5796	.2728	.6592	.0456	.4319	.8183	.2047
299	.4210	.1142	.8074	.5006	.1938	.8870	.5802	.2734	.6598	.0462	.4326	.8190	.2054
302	.4215	.1147	.8079	.5012	.1944	.8876	.5808	.2740	.6604	.0468	.4332	.8196	.2061
423305	69.4220	71.1152	72.8085	74.5017	76.1949	77.8881	79.5813	81.2746	84.6610	88.0474	91.4339	94.8203	98.2068
308	.4225	.1157	.8090	.5022	.1954	.8887	.5819	.2751	.6616	.0481	.4345	.8210	.2075
311	.4230	.1162	.8095	.5027	.1960	.8892	.5825	.2757	.6622	.0487	.4352	.8217	.2082
314	.4235	.1168	.8100	.5033	.1965	.8898	.5830	.2763	.6628	.0493	.4358	.8223	.2088
317	.4240	.1173	.8105	.5038	.1971	.8903	.5836	.2769	.6634	.0499	.4365	.8230	.2095
423320	69.4245	71.1178	72.8110	74.5043	76.1976	77.8909	79.5842	81.2774	84.6640	88.0506	91.4371	94.8237	98.2102
323	.4250	.1183	.8116	.5048	.1981	.8914	.5847	.2780	.6646	.0512	.4378	.8244	.2109
326	.4255	.1188	.8121	.5054	.1987	.8920	.5853	.2786	.6652	.0518	.4384	.8250	.2116
329	.4260	.1193	.8126	.5059	.1992	.8925	.5859	.2792	.6658	.0524	.4391	.8257	.2123
332	.4264	.1198	.8131	.5064	.1998	.8931	.5864	.2797	.6664	.0531	.4397	.8264	.2130
423335	69.4269	71.1203	72.8136	74.5070	76.2003	77.8936	79.5870	81.2803	84.6670	88.0537	91.4404	94.8270	98.2137
338	.4274	.1208	.8141	.5075	.2008	.8942	.5875	.2809	.6676	.0543	.4410	.8277	.2144
341	.4279	.1213	.8147	.5080	.2014	.8947	.5881	.2815	.6682	.0549	.4417	.8284	.2151
344	.4284	.1218	.8152	.5085	.2019	.8953	.5887	.2820	.6688	.0556	.4423	.8291	.2158
347	.4289	.1223	.8157	.5091	.2025	.8958	.5892	.2826	.6694	.0562	.4430	.8297	.2165
423350	69.4294	71.1228	72.8162	74.5096	76.2030	77.8964	79.5898	81.2832	84.6700	88.0568	91.4436	94.8304	98.2172
353	.4299	.1233	.8167	.5101	.2035	.8970	.5904	.2838	.6706	.0574	.4442	.8311	.2179
356	.4304	.1238	.8172	.5107	.2041	.8975	.5909	.2844	.6712	.0580	.4449	.8317	.2186
359	.4309	.1243	.8177	.5112	.2046	.8981	.5915	.2849	.6718	.0587	.4455	.8324	.2193
362	.4314	.1248	.8183	.5117	.2052	.8986	.5921	.2855	.6724	.0593	.4462	.8331	.2200
423365	69.4319	71.1253	72.8188	74.5122	76.2057	77.8992	79.5926	81.2861	84.6730	88.0599	91.4468	94.8338	98.2207
368	.4324	.1258	.8193	.5128	.2062	.8997	.5932	.2867	.6736	.0605	.4475	.8344	.2214
371	.4328	.1263	.8198	.5133	.2068	.9003	.5937	.2872	.6742	.0612	.4481	.8351	.2221
374	.4333	.1268	.8203	.5138	.2073	.9008	.5943	.2878	.6748	.0618	.4488	.8358	.2228
377	.4338	.1273	.8208	.5144	.2079	.9014	.5949	.2884	.6754	.0624	.4494	.8364	.2235
423380	69.4343	71.1278	72.8214	74.5149	76.2084	77.9019	79.5954	81.2890	84.6760	88.0630	91.4501	94.8371	98.2242
383	.4348	.1283	.8219	.5154	.2089	.9025	.5960	.2895	.6766	.0637	.4507	.8378	.2249
386	.4353	.1288	.8224	.5159	.2095	.9030	.5966	.2901	.6772	.0643	.4514	.8385	.2256
389	.4358	.1294	.8229	.5165	.2100	.9036	.5971	.2907	.6778	.0649	.4520	.8391	.2262
392	.4363	.1299	.8234	.5170	.2106	.9041	.5977	.2913	.6784	.0655	.4527	.8398	.2269
423395	69.4368	71.1304	72.8239	74.5175	76.2111	77.9047	79.5983	81.2918	84.6790	88.0662	91.4533	94.8405	98.2276
398	.4373	.1309	.8245	.5180	.2116	.9052	.5988	.2924	.6796	.0668	.4540	.8412	.2283
401	.4378	.1314	.8250	.5186	.2122	.9058	.5994	.2930	.6802	.0674	.4546	.8418	.2290
404	.4383	.1319	.8255	.5191	.2127	.9063	.6000	.2936	.6808	.0680	.4553	.8425	.2297
407	.4387	.1324	.8260	.5196	.2133	.9069	.6005	.2941	.6814	.0687	.4559	.8432	.2304
423410	69.4392	71.1329	72.8265	74.5202	76.2138	77.9074	79.6011	81.2947	84.6820	88.0693	91.4566	94.8438	98.2311
413	.4397	.1334	.8270	.5207	.2143	.9080	.6016	.2953	.6826	.0699	.4572	.8445	.2318
416	.4402	.1339	.8276	.5212	.2149	.9085	.6022	.2959	.6832	.0705	.4579	.8452	.2325
419	.4407	.1344	.8281	.5217	.2154	.9091	.6028	.2964	.6838	.0712	.4585	.8459	.2332
422	.4412	.1349	.8286	.5223	.2160	.9096	.6033	.2970	.6844	.0718	.4592	.8465	.2339
423425	69.4417	71.1354	72.8291	74.5228	76.2165	77.9102	79.6039	81.2976	84.6850	88.0724	91.4598	94.8472	98.2346
428	.4422	.1359	.8296	.5233	.2170	.9108	.6045	.2982	.6856	.0730	.4604	.8479	.2353
431	.4427	.1364	.8301	.5239	.2176	.9113	.6050	.2988	.6862	.0736	.4611	.8485	.2360
434	.4432	.1369	.8306	.5244	.2181	.9119	.6056	.2993	.6868	.0743	.4617	.8492	.2367
437	.4437	.1374	.8312	.5249	.2187	.9124	.6062	.2999	.6874	.0749	.4624	.8499	.2374
423440	69.4442	71.1379	72.8317	74.5254	76.2192	77.9130	79.6067	81.3005	84.6880	88.0755	91.4630	94.8506	98.2381
443	.4447	.1384	.8322	.5260	.2197	.9135	.6073	.3011	.6886	.0761	.4637	.8512	.2388
446	.4451	.1389	.8327	.5265	.2203	.9141	.6078	.3016	.6892	.0768	.4643	.8519	.2395
449	.4456	.1394	.8332	.5270	.2208	.9146	.6084	.3022	.6898	.0774	.4650	.8526	.2402
452	.4461	.1399	.8337	.5276	.2214	.9152	.6090	.3028	.6904	.0780	.4656	.8532	.2409
423455	69.4466	71.1404	72.8343	74.5281	76.2219	77.9157	79.6095	81.3034	84.6910	88.0786	91.4663	94.8539	98.2416
458	.4471	.1409	.8348	.5286	.2224	.9163	.6101	.3039	.6916	.0793	.4669	.8546	.2423
461	.4476	.1414	.8353	.5291	.2230	.9168	.6107	.3045	.6922	.0799	.4676	.8553	.2430
464	.4481	.1420	.8358	.5297	.2235	.9174	.6112	.3051	.6928	.0805	.4682	.8559	.2436
467	.4486	.1425	.8363	.5302	.2241	.9179	.6118	.3057	.6934	.0811	.4689	.8566	.2443
423470	69.4491	71.1430	72.8368	74.5307	76.2246	77.9185	79.6124	81.3062	84.6940	88.0818	91.4695	94.8573	98.2450
473	.4496	.1435	.8374	.5312	.2251	.9190	.6129	.3068	.6946	.0824	.4702	.8580	.2457
476	.4501	.1440	.8379	.5318	.2257	.9196	.6135	.3074	.6952	.0830	.4708	.8586	.2464
479	.4506	.1445	.8384	.5323	.2262	.9201	.6141	.3080	.6958	.0836	.4715	.8593	.2471
482	.4510	.1450	.8389	.5328	.2268	.9207	.6146	.3085	.6964	.0843	.4721	.8600	.2478
423485	69.4515	71.1455	72.8394	74.5334	76.2273	77.9212	79.6152	81.3091	84.6970	88.0849	91.4728	94.8606	98.2485
488	.4520	.1460	.8399	.5339	.2278	.9218	.6157	.3097	.6976	.0855	.4734	.8613	.2492
491	.4525	.1465	.8405	.5344	.2284	.9223	.6163	.3103	.6982	.0861	.4741	.8620	.2499
494	.4530	.1470	.8410	.5349	.2289	.9229	.6169	.3108	.6988	.0868	.4747	.8627	.2506
497	.4535	.1475	.8415	.5355	.2295	.9234	.6174	.3114	.6994	.0874	.4754	.8633	.2513
423500	69.4540	71.1480	72.8420	74.5360	76.2300	77.9240	79.6180	81.3120	84.7000	88.0880	91.4760	94.8640	98.2520

MEGACYCLES PER SECOND

H A R M O N I C S

BASIC FREQ.	112	116	120	124	128	132	136	140	144	148	152	156	160
423500	47.4320	49.1260	50.8200	52.5140	54.2080	55.9020	57.5960	59.2900	60.9840	62.6780	64.3720	66.0660	67.7600
503	.4323	.1263	.8204	.5144	.2084	.9024	.5964	.2904	.9844	.6784	.3725	.0665	.7605
506	.4327	.1267	.8207	.5147	.2088	.9028	.5968	.2908	.9849	.6789	.3729	.0669	.7610
509	.4330	.1270	.8211	.5151	.2092	.9032	.5972	.2913	.9853	.6793	.3734	.0674	.7614
512	.4333	.1274	.8214	.5155	.2095	.9036	.5976	.2917	.9857	.6798	.3738	.0679	.7619
423515	47.4337	49.1277	50.8218	52.5159	54.2099	55.9040	57.5980	59.2931	60.9862	62.6802	64.3743	66.0683	67.7624
518	.4340	.1281	.8222	.5162	.2103	.9044	.5984	.2925	.9866	.6807	.3747	.0688	.7629
521	.4344	.1284	.8225	.5166	.2107	.9048	.5989	.2929	.9870	.6811	.3752	.0693	.7634
524	.4347	.1288	.8229	.5170	.2111	.9052	.5993	.2934	.9875	.6816	.3756	.0697	.7638
527	.4350	.1291	.8232	.5173	.2115	.9056	.5997	.2938	.9879	.6820	.3761	.0702	.7643
423530	47.4354	49.1295	50.8236	52.5177	54.2118	55.9060	57.6001	59.2942	60.9883	62.6824	64.3766	66.0707	67.7648
533	.4357	.1298	.8240	.5181	.2122	.9064	.6005	.2946	.9888	.6829	.3770	.0711	.7653
536	.4360	.1302	.8243	.5185	.2126	.9068	.6009	.2950	.9892	.6833	.3775	.0716	.7658
539	.4364	.1305	.8247	.5188	.2130	.9071	.6013	.2955	.9896	.6838	.3779	.0721	.7662
542	.4367	.1309	.8250	.5192	.2134	.9075	.6017	.2959	.9900	.6842	.3784	.0726	.7667
423545	47.4370	49.1312	50.8254	52.5196	54.2138	55.9079	57.6021	59.2963	60.9905	62.6847	64.3788	66.0730	67.7672
548	.4374	.1316	.8258	.5200	.2141	.9083	.6025	.2967	.9909	.6851	.3793	.0735	.7677
551	.4377	.1319	.8261	.5203	.2145	.9087	.6029	.2971	.9913	.6855	.3798	.0740	.7682
554	.4380	.1323	.8265	.5207	.2149	.9091	.6033	.2976	.9918	.6860	.3802	.0744	.7686
557	.4384	.1326	.8268	.5211	.2153	.9095	.6038	.2980	.9922	.6864	.3807	.0749	.7691
423560	47.4387	49.1330	50.8272	52.5214	54.2157	55.9099	57.6042	59.2984	60.9926	62.6869	64.3811	66.0754	67.7696
563	.4391	.1333	.8276	.5218	.2161	.9103	.6046	.2988	.9931	.6873	.3816	.0758	.7701
566	.4394	.1337	.8279	.5222	.2164	.9107	.6050	.2992	.9935	.6878	.3820	.0763	.7706
569	.4397	.1340	.8283	.5226	.2168	.9111	.6054	.2997	.9939	.6882	.3825	.0768	.7710
572	.4401	.1344	.8286	.5229	.2172	.9115	.6058	.3001	.9944	.6887	.3829	.0772	.7715
423575	47.4404	49.1347	50.8290	52.5233	54.2176	55.9119	57.6062	59.3005	60.9948	62.6891	64.3834	66.0777	67.7720
578	.4407	.1350	.8294	.5237	.2180	.9123	.6066	.3009	.9952	.6895	.3839	.0782	.7725
581	.4411	.1354	.8297	.5240	.2184	.9127	.6070	.3013	.9957	.6900	.3843	.0786	.7730
584	.4414	.1357	.8301	.5244	.2188	.9131	.6074	.3018	.9961	.6904	.3848	.0791	.7734
587	.4417	.1361	.8304	.5248	.2191	.9135	.6078	.3022	.9965	.6909	.3852	.0796	.7739
423590	47.4421	49.1364	50.8308	52.5252	54.2195	55.9139	57.6082	59.3026	60.9970	62.6913	64.3857	66.0800	67.7744
593	.4424	.1368	.8312	.5255	.2199	.9143	.6086	.3030	.9974	.6918	.3861	.0805	.7749
596	.4428	.1371	.8315	.5259	.2203	.9147	.6091	.3034	.9978	.6922	.3866	.0810	.7754
599	.4431	.1375	.8319	.5263	.2207	.9151	.6095	.3039	.9983	.6927	.3870	.0814	.7758
602	.4434	.1378	.8322	.5266	.2211	.9155	.6099	.3043	.9987	.6931	.3875	.0819	.7763
423605	47.4438	49.1382	50.8326	52.5270	54.2214	55.9159	57.6103	59.3047	60.9991	62.6935	64.3880	66.0824	57.7768
608	.4441	.1385	.8330	.5274	.2218	.9163	.6107	.3051	.9996	.6940	.3884	.0828	.7773
611	.4444	.1389	.8333	.5278	.2222	.9167	.6111	.3055	61.0000	.6944	.3889	.0833	.7778
614	.4448	.1392	.8337	.5281	.2226	.9170	.6115	.3060	.0004	.6949	.3893	.0838	.7782
617	.4451	.1396	.8340	.5285	.2230	.9174	.6119	.3064	.0008	.6953	.3898	.0843	.7787
423620	47.4454	49.1399	50.8344	52.5289	54.2234	55.9178	57.6123	59.3068	61.0013	62.6958	64.3902	66.0847	67.7792
623	.4458	.1403	.8348	.5293	.2237	.9182	.6127	.3072	.0017	.6962	.3907	.0852	.7797
626	.4461	.1406	.8351	.5296	.2241	.9186	.6131	.3076	.0021	.6966	.3912	.0857	.7802
629	.4464	.1410	.8355	.5300	.2245	.9190	.6135	.3081	.0026	.6971	.3916	.0861	.7806
632	.4468	.1413	.8358	.5304	.2249	.9194	.6140	.3085	.0030	.6975	.3921	.0866	.7811
423635	47.4471	49.1417	50.8362	52.5307	54.2253	55.9198	57.6144	59.3089	61.0034	62.6980	64.3925	66.0871	67.7816
638	.4475	.1420	.8366	.5311	.2257	.9202	.6148	.3093	.0039	.6984	.3930	.0875	.7821
641	.4478	.1424	.8369	.5315	.2260	.9206	.6152	.3097	.0043	.6989	.3934	.0880	.7826
644	.4481	.1427	.8373	.5319	.2264	.9210	.6156	.3102	.0047	.6993	.3939	.0885	.7830
647	.4485	.1431	.8376	.5322	.2268	.9214	.6160	.3106	.0052	.6998	.3943	.0889	.7835
423650	47.4488	49.1434	50.8380	52.5326	54.2272	55.9218	57.6164	59.3110	60.0056	62.7002	64.3948	66.0894	67.7840
653	.4491	.1437	.8384	.5330	.2276	.9222	.6168	.3114	.0060	.7006	.3953	.0899	.7845
656	.4495	.1441	.8387	.5333	.2280	.9226	.6172	.3118	.0065	.7011	.3957	.0903	.7850
659	.4498	.1444	.8391	.5337	.2284	.9230	.6176	.3123	.0069	.7015	.3962	.0908	.7854
662	.4501	.1448	.8394	.5341	.2287	.9234	.6180	.3127	.0073	.7020	.3966	.0913	.7859
423665	47.4505	49.1451	50.8398	52.5345	54.2291	55.9238	57.6184	59.3131	61.0078	62.7024	64.3971	66.0917	67.7864
668	.4508	.1455	.8402	.5348	.2295	.9242	.6188	.3135	.0082	.7029	.3975	.0922	.7869
671	.4512	.1458	.8405	.5352	.2299	.9246	.6193	.3139	.0086	.7033	.3980	.0927	.7874
674	.4515	.1462	.8409	.5356	.2303	.9250	.6197	.3144	.0091	.7038	.3984	.0931	.7878
677	.4518	.1465	.8412	.5359	.2307	.9254	.6201	.3148	.0095	.7042	.3989	.0936	.7883
423680	47.4522	49.1469	50.8416	52.5363	54.2310	55.9258	57.6205	59.3152	61.0099	62.7046	64.3994	66.0941	67.7888
683	.4525	.1472	.8420	.5367	.2314	.9262	.6209	.3156	.0104	.7051	.3998	.0945	.7893
686	.4528	.1476	.8423	.5371	.2318	.9266	.6213	.3160	.0108	.7055	.4003	.0950	.7898
689	.4532	.1479	.8427	.5374	.2322	.9269	.6217	.3165	.0112	.7060	.4007	.0955	.7902
692	.4535	.1483	.8430	.5378	.2326	.9273	.6221	.3169	.0116	.7064	.4012	.0960	.7907
423695	47.4538	49.1486	50.8434	52.5382	54.2330	55.9277	57.6225	59.3173	61.0121	62.7069	64.4016	66.0964	67.7912
698	.4542	.1490	.8438	.5386	.2333	.9281	.6229	.3177	.0125	.7073	.4021	.0969	.7917
701	.4545	.1493	.8441	.5389	.2337	.9285	.6233	.3181	.0129	.7077	.4026	.0974	.7922
704	.4548	.1497	.8445	.5393	.2341	.9289	.6237	.3186	.0134	.7082	.4030	.0978	.7926
707	.4552	.1500	.8448	.5397	.2345	.9293	.6242	.3190	.0138	.7086	.4035	.0983	.7931
423710	47.4555	49.1504	50.8452	52.5400	54.2349	55.9297	57.6246	59.3194	61.0142	62.7091	64.4039	66.0988	67.7936
713	.4559	.1507	.8456	.5404	.2353	.9301	.6250	.3198	.0147	.7095	.4044	.0992	.7941
716	.4562	.1511	.8459	.5408	.2356	.9305	.6254	.3202	.0151	.7100	.4048	.0997	.7946
719	.4565	.1514	.8463	.5412	.2360	.9309	.6258	.3207	.0155	.7104	.4053	.1002	.7950
722	.4569	.1518	.8466	.5415	.2364	.9313	.6262	.3211	.0160	.7109	.4057	.1006	.7955
423725	47.4572	49.1521	50.8470	52.5419	54.2368	55.9317	57.6266	59.3215	61.0164	62.7113	64.4062	66.1011	67.7960
728	.4575	.1524	.8474	.5423	.2372	.9321	.6270	.3219	.0168	.7117	.4067	.1016	.7965
731	.4579	.1528	.8477	.5426	.2376	.9325	.6274	.3223	.0173	.7122	.4071	.1020	.7970
734	.4582	.1531	.8481	.5430	.2380	.9329	.6278	.3228	.0177	.7126	.4076	.1025	.7974
737	.4585	.1535	.8484	.5434	.2383	.9333	.6282	.3232	.0181	.7131	.4080	.1030	.7979
423740	47.4589	49.1538	50.8488	52.5438	54.2387	55.9337	57.6286	59.3236	61.0186	62.7135	64.4085	66.1034	67.7984
743	.4592	.1542	.8492	.5441	.2391	.9341	.6290	.3240	.0190	.7140	.4089	.1039	.7989
746	.4596	.1545	.8495	.5445	.2395	.9345	.6295	.3244	.0194	.7144	.4094	.1044	.7994
749	.4599	.1549	.8499	.5449	.2399	.9349	.6299	.3249	.0199	.7149	.4098	.1048	.7998
752	.4602	.1552	.8502	.5452	.2403	.9353	.6303	.3253	.0203	.7153	.4103	.1053	.8003
423755	47.4606	49.1556	50.8506	52.5456	54.2406	55.9357	57.6307	59.3257	61.0207	62.7157	64.4108	66.1058	67.8008
758	.4609	.1559	.8510	.5460	.2410	.9361	.6311	.3261	.0212	.7162	.4112	.1062	.8013
761	.4612	.1563	.8513	.5464	.2414	.9365	.6315	.3265	.0216	.7166	.4117	.1067	.8018
764	.4616	.1566	.8517	.5467	.2418	.9368	.6319	.3270	.0220	.7171	.4121	.1072	.8022
767	.4619	.1570	.8520	.5471	.2422	.9372	.6323	.3274	.0224	.7175	.4126	.1077	.8027
423770	47.4622	49.1573	50.8524	52.5475	54.2426	55.9376	57.6327	59.3278	61.0229	62.7180	64.4130	66.1081	67.8032
773	.4626	.1577	.8528	.5479	.2429	.9380	.6331	.3282	.0233	.7184	.4135	.1086	.8037
776	.4629	.1580	.8531	.5482	.2433	.9384	.6335	.3286	.0237	.7188	.4140	.1091	.8042
779	.4632	.1584	.8535	.5486	.2437	.9388	.6339	.3291	.0242	.7193	.4144	.1095	.8046
782	.4636	.1587	.8538	.5490	.2441	.9392	.6344	.3295	.0246	.7197	.4149	.1100	.8051
423785	47.4639	49.1591	50.8542	52.5493	54.2445	55.9396	57.6348	59.3299	61.0250	62.7202	64.4153	66.1105	67.8056
788	.4643	.1594	.8546	.5497	.2449	.9400	.6352	.3303	.0255	.7206	.4158	.1109	.8061
791	.4646	.1598	.8549	.5501	.2452	.9404	.6356	.3307	.0259	.7211	.4162	.1114	.8066
794	.4649	.1601	.8553	.5505	.2456	.9408	.6360	.3312	.0263	.7215	.4167	.1119	.8070
797	.4653	.1605	.8556	.5508	.2460	.9412	.6364	.3316	.0268	.7220	.4171	.1123	.8075
423800	47.4656	49.1608	50.8560	52.5512	54.2464	55.9416	57.6368	59.3320	61.0272	62.7224	64.4176	66.1128	67.8080

MEGACYCLES PER SECOND

H A R M O N I C S

BASIC FREQ.	164	168	172	176	180	184	188	192	200	208	216	224	232
423500	69.4540	71.1480	72.8420	74.5360	76.2300	77.9240	79.6180	81.3120	84.7000	88.0880	91.4760	94.8640	98.2520
503	.4545	.1485	.8425	.5365	.2305	.9246	.6186	.3126	.7006	.0886	.4766	.8647	.2527
506	.4550	.1490	.8430	.5371	.2311	.9251	.6191	.3132	.7012	.0892	.4773	.8653	.2534
509	.4555	.1495	.8435	.5376	.2316	.9257	.6197	.3137	.7018	.0899	.4779	.8660	.2541
512	.4560	.1500	.8441	.5381	.2322	.9262	.6203	.3143	.7024	.0905	.4786	.8667	.2548
423515	69.4565	71.1505	72.8446	74.5386	76.2327	77.9268	79.6208	81.3149	84.7030	88.0911	91.4792	94.8674	98.2555
518	.4570	.1510	.8451	.5392	.2332	.9273	.6214	.3155	.7036	.0917	.4799	.8680	.2562
521	.4574	.1515	.8456	.5397	.2338	.9279	.6219	.3160	.7042	.0924	.4805	.8687	.2569
524	.4579	.1520	.8461	.5402	.2343	.9284	.6225	.3166	.7048	.0930	.4812	.8694	.2576
527	.4584	.1525	.8466	.5408	.2349	.9290	.6231	.3172	.7054	.0936	.4818	.8700	.2583
423530	69.4589	71.1530	72.8472	74.5413	76.2354	77.9295	79.6236	81.3178	84.7060	88.0942	91.4825	94.8707	98.2590
533	.4594	.1535	.8477	.5418	.2359	.9301	.6242	.3183	.7066	.0949	.4831	.8714	.2597
536	.4599	.1540	.8482	.5423	.2365	.9306	.6248	.3189	.7072	.0955	.4838	.8721	.2604
539	.4604	.1546	.8487	.5429	.2370	.9312	.6253	.3195	.7078	.0961	.4844	.8727	.2610
542	.4609	.1551	.8492	.5434	.2376	.9317	.6259	.3201	.7084	.0967	.4851	.8734	.2617
423545	69.4614	71.1556	72.8497	74.5439	76.2381	77.9323	79.6265	81.3206	84.7090	88.0974	91.4857	94.8741	98.2624
548	.4619	.1561	.8503	.5444	.2386	.9328	.6270	.3212	.7096	.0980	.4864	.8748	.2631
551	.4624	.1566	.8508	.5450	.2392	.9334	.6276	.3218	.7102	.0986	.4870	.8754	.2638
554	.4629	.1571	.8513	.5455	.2397	.9339	.6282	.3224	.7108	.0992	.4877	.8761	.2645
557	.4633	.1576	.8518	.5460	.2403	.9345	.6287	.3229	.7114	.0999	.4883	.8768	.2652
423560	69.4638	71.1581	72.8523	74.5466	76.2408	77.9350	79.6293	81.3235	84.7120	88.1005	91.4890	94.8774	98.2659
563	.4643	.1586	.8528	.5471	.2413	.9356	.6298	.3241	.7126	.1011	.4896	.8781	.2666
566	.4648	.1591	.8534	.5476	.2419	.9361	.6304	.3247	.7132	.1017	.4903	.8788	.2673
569	.4653	.1596	.8539	.5481	.2424	.9367	.6310	.3252	.7138	.1024	.4909	.8795	.2680
572	.4658	.1601	.8544	.5487	.2430	.9372	.6315	.3258	.7144	.1030	.4916	.8801	.2687
423575	69.4663	71.1606	72.8549	74.5492	76.2435	77.9378	79.6321	81.3264	84.7150	88.1036	91.4922	94.8808	98.2694
578	.4668	.1611	.8554	.5497	.2440	.9384	.6327	.3270	.7156	.1042	.4928	.8815	.2701
581	.4673	.1616	.8559	.5503	.2446	.9389	.6332	.3276	.7162	.1048	.4935	.8821	.2708
584	.4678	.1621	.8564	.5508	.2451	.9395	.6338	.3281	.7168	.1055	.4941	.8828	.2715
587	.4683	.1626	.8570	.5513	.2457	.9400	.6344	.3287	.7174	.1061	.4948	.8835	.2722
423590	69.4688	71.1631	72.8575	74.5518	76.2462	77.9406	79.6349	81.3293	84.7180	88.1067	91.4954	94.8842	98.2729
593	.4693	.1636	.8580	.5524	.2467	.9411	.6355	.3299	.7186	.1073	.4961	.8848	.2736
596	.4697	.1641	.8585	.5529	.2473	.9417	.6360	.3304	.7192	.1080	.4967	.8855	.2743
599	.4702	.1646	.8590	.5534	.2478	.9422	.6366	.3310	.7198	.1086	.4974	.8862	.2750
602	.4707	.1651	.8595	.5540	.2484	.9428	.6372	.3316	.7204	.1092	.4980	.8868	.2757
423605	69.4712	71.1656	72.8601	74.5545	76.2489	77.9433	79.6377	81.3322	84.7210	88.1098	91.4987	94.8875	98.2764
608	.4717	.1661	.8606	.5550	.2494	.9439	.6383	.3327	.7216	.1105	.4993	.8882	.2771
611	.4722	.1666	.8611	.5555	.2500	.9444	.6389	.3333	.7222	.1111	.5000	.8889	.2778
614	.4727	.1672	.8616	.5661	.2505	.9450	.6394	.3339	.7228	.1117	.5006	.8895	.2784
617	.4732	.1677	.8621	.5566	.2511	.9455	.6400	.3345	.7234	.1123	.5013	.8902	.2791
423620	69.4737	71.1682	72.8626	74.5571	76.2516	77.9461	79.6406	81.3350	84.7240	88.1130	91.5019	94.8909	98.2798
623	.4742	.1687	.8632	.5576	.2521	.9466	.6411	.3356	.7246	.1136	.5026	.8916	.2805
626	.4747	.1692	.8637	.5582	.2527	.9472	.6417	.3362	.7252	.1142	.5032	.8922	.2812
629	.4752	.1697	.8642	.5587	.2532	.9477	.6423	.3368	.7258	.1148	.5039	.8929	.2819
632	.4756	.1702	.8647	.5592	.2538	.9483	.6428	.3373	.7264	.1155	.5045	.8936	.2826
423635	69.4761	71.1707	72.8652	74.5598	76.2543	77.9488	79.6434	81.3379	84.7270	88.1161	91.5052	94.8942	98.2833
638	.4766	.1712	.8657	.5603	.2548	.9494	.6439	.3385	.7276	.1167	.5058	.8949	.2840
641	.4771	.1717	.8663	.5608	.2554	.9499	.6445	.3391	.7282	.1173	.5065	.8956	.2847
644	.4776	.1722	.8668	.5613	.2559	.9505	.6451	.3396	.7288	.1180	.5071	.8963	.2854
647	.4781	.1727	.8673	.5619	.2565	.9510	.6456	.3402	.7294	.1186	.5078	.8969	.2861
423650	69.4786	71.1732	72.8678	74.5624	76.2570	77.9516	79.6462	81.3408	84.7300	88.1192	91.5084	94.8976	98.2868
653	.4791	.1737	.8683	.5629	.2575	.9522	.6468	.3414	.7306	.1198	.5090	.8983	.2875
656	.4796	.1742	.8688	.5635	.2581	.9527	.6473	.3420	.7312	.1204	.5097	.8989	.2882
659	.4801	.1747	.8693	.5640	.2586	.9533	.6479	.3425	.7318	.1211	.5103	.8996	.2889
662	.4806	.1752	.8699	.5645	.2592	.9538	.6485	.3431	.7324	.1217	.5110	.9003	.2896
423665	69.4811	71.1757	72.8704	74.5650	76.2597	77.9544	79.6490	81.3437	84.7330	88.1223	91.5116	94.9010	98.2903
668	.4816	.1762	.8709	.5656	.2602	.9549	.6496	.3443	.7336	.1229	.5123	.9016	.2910
671	.4820	.1767	.8714	.5661	.2608	.9555	.6501	.3448	.7342	.1236	.5129	.9023	.2917
674	.4825	.1772	.8719	.5666	.2613	.9560	.6507	.3454	.7348	.1242	.5136	.9030	.2924
677	.4830	.1777	.8724	.5672	.2619	.9566	.6513	.3460	.7354	.1248	.5142	.9036	.2931
423680	69.4835	71.1782	72.8730	74.5677	76.2624	77.9571	79.6518	81.3466	84.7360	88.1254	91.5149	94.9043	98.2938
683	.4840	.1787	.8735	.5682	.2629	.9577	.6524	.3471	.7366	.1261	.5155	.9050	.2945
686	.4845	.1792	.8740	.5687	.2635	.9582	.6530	.3477	.7372	.1267	.5162	.9057	.2952
689	.4850	.1798	.8745	.5693	.2640	.9588	.6535	.3483	.7378	.1273	.5168	.9063	.2958
692	.4855	.1803	.8750	.5698	.2646	.9593	.6541	.3489	.7384	.1279	.5175	.9070	.2965
423695	69.4860	71.1808	72.8755	74.5703	76.2651	77.9599	79.6547	81.3494	84.7390	88.1286	91.5181	94.9077	98.2972
698	.4865	.1813	.8761	.5708	.2656	.9604	.6552	.3500	.7396	.1292	.5188	.9084	.2979
701	.4870	.1818	.8766	.5714	.2662	.9610	.6558	.3506	.7402	.1298	.5194	.9090	.2986
704	.4875	.1823	.8771	.5719	.2667	.9615	.6564	.3512	.7408	.1304	.5201	.9097	.2993
707	.4879	.1828	.8776	.5724	.2673	.9621	.6569	.3517	.7414	.1311	.5207	.9104	.3000
423710	69.4884	71.1833	72.8781	74.5730	76.2678	77.9626	79.6575	81.3523	84.7420	88.1317	91.5214	94.9110	98.3007
713	.4889	.1838	.8786	.5735	.2683	.9632	.6580	.3529	.7426	.1323	.5220	.9117	.3014
716	.4894	.1843	.8792	.5740	.2689	.9637	.6586	.3535	.7432	.1329	.5227	.9124	.3021
719	.4899	.1848	.8797	.5745	.2694	.9643	.6592	.3540	.7438	.1336	.5233	.9131	.3028
722	.4904	.1853	.8802	.5751	.2700	.9648	.6597	.3546	.7444	.1342	.5240	.9137	.3035
423725	69.4909	71.1858	72.8807	74.5756	76.2705	77.9654	79.6603	81.3552	84.7450	88.1348	91.5246	94.9144	98.3042
728	.4914	.1863	.8812	.5761	.2710	.9660	.6609	.3558	.7456	.1354	.5252	.9151	.3049
731	.4919	.1868	.8817	.5767	.2716	.9665	.6614	.3564	.7462	.1360	.5259	.9157	.3056
734	.4924	.1873	.8822	.5772	.2721	.9671	.6620	.3569	.7468	.1367	.5265	.9164	.3063
737	.4929	.1878	.8828	.5777	.2727	.9676	.6626	.3575	.7474	.1373	.5272	.9171	.3070
423740	69.4934	71.1883	72.8833	74.5782	76.2732	77.9682	79.6631	81.3581	84.7480	88.1379	91.5278	94.9178	98.3077
743	.4939	.1888	.8838	.5788	.2737	.9687	.6637	.3587	.7486	.1385	.5285	.9184	.3084
746	.4943	.1893	.8843	.5793	.2743	.9693	.6642	.3592	.7492	.1392	.5291	.9191	.3091
749	.4948	.1898	.8848	.5798	.2748	.9698	.6648	.3598	.7498	.1398	.5298	.9198	.3098
752	.4953	.1903	.8853	.5804	.2754	.9704	.6654	.3604	.7504	.1404	.5304	.9204	.3105
423755	69.4958	71.1908	72.8859	74.5809	76.2759	77.9709	79.6659	81.3610	84.7510	88.1410	91.5311	94.9211	98.3112
758	.4963	.1913	.8864	.5814	.2764	.9715	.6665	.3615	.7516	.1417	.5317	.9218	.3119
761	.4968	.1918	.8869	.5819	.2770	.9720	.6671	.3621	.7522	.1423	.5324	.9225	.3126
764	.4973	.1924	.8874	.5825	.2775	.9726	.6676	.3627	.7528	.1429	.5330	.9231	.3132
767	.4978	.1929	.8879	.5830	.2781	.9731	.6682	.3633	.7534	.1435	.5337	.9238	.3139
423770	69.4983	71.1934	72.8884	74.5835	76.2786	77.9737	79.6688	81.3638	84.7540	88.1442	91.5343	94.9245	98.3146
773	.4988	.1939	.8890	.5840	.2791	.9742	.6693	.3644	.7546	.1448	.5350	.9252	.3153
776	.4993	.1944	.8895	.5846	.2797	.9748	.6699	.3650	.7552	.1454	.5356	.9258	.3160
779	.4998	.1949	.8900	.5851	.2802	.9753	.6705	.3656	.7558	.1460	.5363	.9265	.3167
782	.5002	.1954	.8905	.5856	.2808	.9759	.6710	.3661	.7564	.1467	.5369	.9272	.3174
423785	69.5007	71.1959	72.8910	74.5862	76.2813	77.9764	79.6716	81.3667	84.7570	88.1473	91.5376	94.9278	98.3181
788	.5012	.1964	.8915	.5867	.2818	.9770	.6721	.3673	.7576	.1479	.5382	.9285	.3188
791	.5017	.1969	.8921	.5872	.2824	.9775	.6727	.3679	.7582	.1485	.5389	.9292	.3195
794	.5022	.1974	.8926	.5877	.2829	.9781	.6733	.3684	.7588	.1492	.5395	.9299	.3202
797	.5027	.1979	.8931	.5883	.2835	.9786	.6738	.3690	.7594	.1498	.5402	.9305	.3209
423800	69.5032	71.1984	72.8936	74.5888	76.2840	77.9792	79.6744	81.3696	84.7600	88.1504	91.5408	94.9312	98.3216

MEGACYCLES PER SECOND

R

H A R M O N I C S

BASIC FREQ.	112	116	120	124	128	132	136	140	144	148	152	156	160
423800	47.4656	49.1608	50.8560	52.5512	54.2464	55.9416	57.6368	59.3320	61.0272	62.7224	64.4176	66.1128	67.8080
803	.4659	.1611	.8564	.5516	.2468	.9420	.6372	.3324	.0276	.7228	.4184	.1133	.8085
806	.4663	.1615	.8567	.5519	.2472	.9424	.6376	.3328	.0281	.7233	.4185	.1137	.8090
809	.4666	.1618	.8571	.5523	.2476	.9428	.6380	.3333	.0285	.7237	.4190	.1142	.8094
812	.4669	.1622	.8574	.5527	.2479	.9432	.6384	.3337	.0289	.7242	.4194	.1147	.8099
423815	47.4673	49.1625	50.8578	52.5531	54.2483	55.9436	57.6388	59.3341	61.0294	62.7246	64.4199	66.1151	67.8104
818	.4676	.1629	.8582	.5534	.2487	.9440	.6392	.3345	.0298	.7251	.4203	.1156	.8109
821	.4680	.1632	.8585	.5538	.2491	.9444	.6397	.3349	.0302	.7255	.4208	.1161	.8114
824	.4683	.1636	.8589	.5542	.2495	.9448	.6401	.3354	.0307	.7260	.4212	.1165	.8118
827	.4686	.1639	.8592	.5545	.2499	.9452	.6405	.3358	.0311	.7264	.4217	.1170	.8123
423830	47.4690	49.1643	50.8596	52.5549	54.2502	57.9456	57.6409	59.3362	61.0315	62.7268	64.4222	66.1175	67.8128
833	.4693	.1646	.8600	.5553	.2506	.9460	.6413	.3366	.0320	.7273	.4226	.1179	.8133
836	.4696	.1650	.8603	.5557	.2510	.9464	.6417	.3370	.0324	.7277	.4231	.1184	.8138
839	.4700	.1653	.8607	.5560	.2514	.9467	.6421	.3375	.0328	.7282	.4235	.1189	.8142
842	.4703	.1657	.8610	.5564	.2518	.9471	.6425	.3379	.0332	.7286	.4240	.1194	.8147
423845	47.4706	49.1660	50.8614	52.5568	54.2522	55.9475	57.6429	59.3383	61.0337	62.7291	64.4244	66.1198	67.8152
848	.4710	.1664	.8618	.5572	.2525	.9479	.6433	.3387	.0341	.7295	.4249	.1203	.8157
851	.4713	.1667	.8621	.5575	.2529	.9483	.6437	.3391	.0345	.7299	.4254	.1208	.8162
854	.4716	.1671	.8625	.5579	.2533	.9487	.6441	.3396	.0350	.7304	.4258	.1212	.8166
857	.4720	.1674	.8628	.5583	.2537	.9491	.6446	.3400	.0354	.7308	.4263	.1217	.8171
423860	47.4723	49.1678	50.8632	52.5586	54.2541	55.9495	57.6450	59.3404	61.0358	62.7313	64.4267	66.1222	67.8176
863	.4727	.1681	.8636	.5590	.2545	.9499	.6454	.3408	.0363	.7317	.4272	.1226	.8181
866	.4730	.1685	.8639	.5594	.2548	.9503	.6458	.3412	.0367	.7322	.4276	.1231	.8186
869	.4733	.1688	.8643	.5598	.2552	.9507	.6462	.3417	.0371	.7326	.4281	.1236	.8190
872	.4737	.1692	.8646	.5601	.2556	.9511	.6466	.3421	.0376	.7331	.4285	.1240	.8195
423875	47.4740	49.1695	50.8650	52.5605	54.2560	55.9515	57.6470	59.3425	61.0380	62.7335	64.4290	66.1245	67.8200
878	.4743	.1698	.8654	.5609	.2564	.9519	.6474	.3429	.0384	.7339	.4295	.1250	.8205
881	.4747	.1702	.8657	.5612	.2568	.9523	.6478	.3433	.0389	.7344	.4299	.1254	.8210
884	.4750	.1705	.8661	.5616	.2572	.9527	.6482	.3438	.0393	.7348	.4304	.1259	.8214
887	.4753	.1709	.8664	.5620	.2575	.9531	.6486	.3442	.0397	.7353	.4308	.1264	.8219
423890	47.4757	49.1712	50.8668	52.5624	54.2579	55.9535	57.6490	59.3446	61.0402	62.7357	64.4313	66.1268	67.8224
893	.4760	.1716	.8672	.5627	.2583	.9539	.6494	.3450	.0406	.7362	.4317	.1273	.8229
896	.4764	.1719	.8675	.5631	.2587	.9543	.6449	.3454	.0410	.7366	.4322	.1278	.8234
899	.4767	.1723	.8679	.5635	.2591	.9547	.6503	.3459	.0415	.7371	.4326	.1282	.8238
902	.4770	.1726	.8682	.5638	.2595	.9551	.6507	.3463	.0419	.7375	.4331	.1287	.8243
423905	47.4774	49.1730	50.8686	52.5642	54.2598	55.9555	57.6511	59.3467	61.0423	62.7379	64.4336	66.1292	67.8248
908	.4777	.1733	.8690	.5646	.2602	.9559	.6515	.3471	.0428	.7384	.4340	.1296	.8253
911	.4780	.1737	.8693	.5650	.2606	.9563	.6519	.3475	.0432	.7388	.4345	.1301	.8258
914	.4784	.1740	.8697	.5653	.2610	.9566	.6523	.3480	.0436	.7393	.4349	.1306	.8262
917	.4787	.1744	.8700	.5657	.2614	.9570	.6527	.3484	.0440	.7397	.4354	.1311	.8267
423920	47.4790	49.1747	50.8704	52.5661	54.2618	55.9574	57.6531	59.3488	61.0445	62.7402	64.4358	66.1315	67.8272
923	.4794	.1751	.8708	.5665	.2621	.9578	.6535	.3492	.0449	.7406	.4363	.1320	.8277
926	.4797	.1754	.8711	.5668	.2625	.9582	.6539	.3496	.0453	.7410	.4368	.1325	.8282
929	.4800	.1758	.8715	.5672	.2629	.9586	.6543	.3501	.0458	.7415	.4372	.1329	.8286
932	.4804	.1761	.8718	.5676	.2633	.9590	.6548	.3505	.0462	.7419	.4377	.1334	.8291
423935	47.4807	49.1765	50.8722	52.5679	54.2637	55.9594	57.6552	59.3509	61.0466	62.7424	64.4381	66.1339	67.8296
938	.4811	.1768	.8726	.5683	.2641	.9598	.6556	.3513	.0471	.7428	.4386	.1343	.8301
941	.4814	.1772	.8729	.5687	.2644	.9602	.6560	.3517	.0475	.7433	.4390	.1348	.8306
944	.4817	.1775	.8733	.5691	.2648	.9606	.6564	.3522	.0479	.7437	.4395	.1353	.8310
947	.4821	.1779	.8736	.5694	.2652	.9610	.6568	.3526	.0484	.7442	.4399	.1357	.8315
423950	47.4824	49.1782	50.8740	52.5698	54.2656	55.9614	57.6572	59.3530	61.0488	62.7446	64.4404	66.1362	67.8320
953	.4827	.1785	.8744	.5702	.2660	.9618	.6576	.3534	.0492	.7450	.4409	.1367	.8325
956	.4831	.1789	.8747	.5705	.2664	.9622	.6580	.3538	.0497	.7455	.4413	.1371	.8330
959	.4834	.1792	.8751	.5709	.2668	.9626	.6584	.3543	.0501	.7459	.4418	.1376	.8334
962	.4837	.1796	.8754	.5713	.2671	.9630	.6588	.3547	.0505	.7464	.4422	.1381	.8339
423965	47.4841	49.1799	50.8758	52.5717	54.2675	55.9634	57.6592	59.3551	61.0510	62.7468	64.4427	66.1385	67.8344
968	.4844	.1803	.8762	.5720	.2679	.9638	.6596	.3555	.0514	.7473	.4431	.1390	.8349
971	.4848	.1806	.8765	.5724	.2683	.9642	.6601	.3559	.0518	.7477	.4436	.1395	.8354
974	.4851	.1810	.8769	.5728	.2687	.9646	.6605	.3564	.0523	.7482	.4440	.1399	.8358
977	.4854	.1813	.8772	.5731	.2691	.9650	.6609	.3568	.0527	.7486	.4445	.1404	.8363
423980	47.4858	49.1817	50.8776	52.5735	54.2694	55.9654	57.6613	59.3572	61.0531	62.7490	64.4450	66.1409	67.8368
983	.4861	.1820	.8780	.5739	.2698	.9658	.6617	.3576	.0536	.7495	.4454	.1413	.8373
986	.4864	.1824	.8783	.5743	.2702	.9662	.6621	.3580	.0540	.7499	.4459	.1418	.8378
989	.4868	.1827	.8787	.5746	.2706	.9665	.6625	.3585	.0544	.7504	.4463	.1423	.8382
992	.4871	.1831	.8790	.5750	.2710	.9669	.6629	.3589	.0548	.7508	.4468	.1428	.8387
423995	47.4874	49.1834	50.8794	52.5754	54.2714	55.9673	57.6633	59.3593	61.0553	62.7513	64.4472	66.1432	67.8392
998	.4878	.1838	.8798	.5758	.2717	.9677	.6637	.3597	.0557	.7517	.4477	.1437	.8397
424001	.4881	.1841	.8801	.5761	.2721	.9681	.6641	.3601	.0561	.7521	.4482	.1442	.8402
004	.4884	.1845	.8805	.5765	.2725	.9685	.6645	.3606	.0566	.7526	.4486	.1446	.8406
007	.4888	.1848	.8808	.5769	.2729	.9689	.6650	.3610	.0570	.7530	.4491	.1451	.8411
424010	47.4891	49.1852	50.8812	52.5772	54.2733	55.9693	57.6654	59.3614	61.0574	62.7535	64.4495	66.1456	67.8416
013	.4895	.1855	.8816	.5776	.2737	.9697	.6658	.3618	.0579	.7539	.4500	.1460	.8421
016	.4898	.1859	.8819	.5780	.2740	.9701	.6662	.3622	.0583	.7544	.4504	.1465	.8426
019	.4901	.1862	.8823	.5784	.2744	.9705	.6666	.3627	.0587	.7548	.4509	.1470	.8430
022	.4905	.1866	.8826	.5787	.2748	.9709	.6670	.3631	.0592	.7553	.4513	.1474	.8435
424025	47.4908	49.1869	50.8830	52.5791	54.2752	55.9713	57.6674	59.3635	61.0596	62.7557	64.4518	66.1479	67.8440
028	.4911	.1872	.8834	.5795	.2756	.9717	.6678	.3639	.0600	.7561	.4523	.1484	.8445
031	.4915	.1876	.8837	.5798	.2760	.9721	.6682	.3643	.0605	.7566	.4527	.1488	.8450
034	.4918	.1879	.8841	.5802	.2764	.9725	.6686	.3648	.0609	.7570	.4532	.1493	.8454
037	.4921	.1883	.8844	.5806	.2767	.9729	.6690	.3652	.0613	.7575	.4536	.1498	.8459
424040	47.4925	49.1886	50.8848	52.5810	54.2771	55.9733	57.6694	59.3656	61.0618	62.7579	64.4541	66.1502	67.8464
043	.4928	.1890	.8852	.5813	.2775	.9737	.6698	.3660	.0622	.7584	.4545	.1507	.8469
046	.4932	.1893	.8855	.5817	.2779	.9741	.6703	.3664	.0626	.7588	.4550	.1512	.8474
049	.4935	.1897	.8859	.5821	.2783	.9745	.6707	.3669	.0631	.7593	.4554	.1516	.8478
052	.4938	.1900	.8862	.5824	.2787	.9749	.6711	.3673	.0635	.7597	.4559	.1521	.8483
424055	47.4942	49.1904	50.8866	52.5828	54.2790	55.9753	57.6715	59.3677	61.0639	62.7601	64.4564	66.1526	67.8488
058	.4945	.1907	.8870	.5832	.2794	.9757	.6719	.3681	.0644	.7606	.4568	.1530	.8493
061	.4948	.1911	.8873	.5836	.2798	.9761	.6723	.3685	.0648	.7610	.4573	.1535	.8498
064	.4952	.1914	.8877	.5839	.2802	.9764	.6727	.3690	.0652	.7615	.4577	.1540	.8502
067	.4955	.1918	.8880	.5843	.2806	.9768	.6731	.3694	.0656	.7619	.4582	.1545	.8507
424070	47.4958	49.1921	50.8884	52.5847	54.2810	55.9772	57.6735	59.3698	61.0661	62.7624	64.4586	66.1549	67.8512
073	.4962	.1925	.8888	.5851	.2813	.9776	.6739	.3702	.0665	.7628	.4591	.1554	.8517
076	.4965	.1928	.8891	.5854	.2817	.9780	.6743	.3706	.0669	.7632	.4596	.1559	.8522
079	.4968	.1932	.8895	.5858	.2821	.9784	.6747	.3711	.0674	.7637	.4600	.1563	.8526
082	.4972	.1935	.8898	.5862	.2825	.9788	.6752	.3715	.0678	.7641	.4605	.1568	.8531
424085	47.4975	49.1939	50.8902	52.5865	54.2829	55.9792	57.6756	59.3719	61.0682	62.7646	64.4609	66.1573	67.8536
088	.4979	.1942	.8906	.5869	.2833	.9796	.6760	.3723	.0687	.7650	.4614	.1577	.8541
091	.4982	.1946	.8909	.5873	.2836	.9800	.6764	.3727	.0691	.7655	.4618	.1582	.8546
094	.4985	.1949	.8913	.5877	.2840	.9804	.6768	.3732	.0695	.7659	.4623	.1587	.8550
097	.4989	.1953	.8916	.5880	.2844	.9808	.6772	.3736	.0700	.7664	.4627	.1591	.8555
424100	47.4992	49.1956	50.8920	52.5884	54.2848	55.9812	57.6776	59.3740	61.0704	62.7668	74.4632	66.1596	67.8560

MEGACYCLES PER SECOND

HARMONICS

BASIC FREQ.	164	168	172	176	180	184	188	192	200	208	216	224	232
423800	69.5032	71.1984	72.8936	74.5888	76.2840	77.9792	79.6744	81.3696	84.7600	88.1504	91.5408	94.9312	98.3216
803	.5037	.1989	.8941	.5893	.2845	.9798	.6750	.3702	.7606	.1510	.5414	.9319	.3223
806	.5042	.1994	.8946	.5899	.2851	.9803	.6755	.3708	.7612	.1516	.5421	.9325	.3230
809	.5047	.1999	.8951	.5904	.2856	.9809	.6761	.3713	.7618	.1523	.5427	.9332	.3237
812	.5052	.2004	.8957	.5909	.2862	.9814	.6767	.3719	.7624	.1529	.5434	.9339	.3244
423815	69.5057	71.2009	72.8962	74.5914	76.2867	77.9820	79.6772	81.3725	84.7630	88.1535	91.5440	94.9346	98.3251
818	.5062	.2014	.8967	.5920	.2872	.9825	.6778	.3731	.7636	.1541	.5447	.9352	.3258
821	.5066	.2019	.8972	.5925	.2878	.9831	.6783	.3736	.7642	.1548	.5453	.9359	.3265
824	.5071	.2024	.8977	.5930	.2883	.9836	.6789	.3742	.7648	.1554	.5460	.9366	.3272
827	.5076	.2029	.8982	.5936	.2889	.9842	.6795	.3748	.7654	.1560	.5466	.9372	.3279
423830	69.5081	71.2034	72.8988	74.5941	76.2894	77.9847	79.6800	81.3754	84.7660	88.1566	91.5473	94.9379	98.3286
833	.5086	.2039	.8993	.5946	.2899	.9853	.6806	.3759	.7666	.1573	.5479	.9386	.3293
836	.5091	.2044	.8998	.5951	.2905	.9858	.6812	.3765	.7672	.1579	.5486	.9393	.3300
839	.5096	.2050	.9003	.5957	.2910	.9864	.6817	.3771	.7678	.1585	.5492	.9399	.3306
842	.5101	.2055	.9008	.5962	.2916	.9869	.6823	.3777	.7684	.1591	.5499	.9406	.3313
423845	69.5106	71.2060	72.9013	74.5967	76.2921	77.9875	79.6829	81.3782	84.7690	88.1598	91.5505	94.9413	98.3320
848	.5111	.2065	.9019	.5972	.2926	.9880	.6834	.3788	.7696	.1604	.5512	.9420	.3327
851	.5116	.2070	.9024	.5978	.2932	.9886	.6840	.3794	.7702	.1610	.5518	.9426	.3334
854	.5121	.2075	.9029	.5983	.2937	.9891	.6846	.3800	.7708	.1616	.5525	.9433	.3341
857	.5125	.2080	.9034	.5988	.2943	.9897	.6851	.3805	.7714	.1623	.5531	.9440	.3348
423860	69.5130	71.2085	72.9039	74.5994	76.2948	77.9902	79.6857	81.3811	84.7720	88.1629	91.5538	94.9446	98.3355
863	.5135	.2090	.9044	.5999	.2953	.9908	.6862	.3817	.7726	.1635	.5544	.9453	.3362
866	.5140	.2095	.9050	.6004	.2959	.9913	.6868	.3823	.7732	.1641	.5551	.9460	.3369
869	.5145	.2100	.9055	.6009	.2964	.9919	.6874	.3828	.7738	.1648	.5557	.9467	.3376
872	.5150	.2105	.9060	.6015	.2970	.9924	.6879	.3834	.7744	.1654	.5564	.9473	.3383
423875	69.5155	71.2110	72.9065	74.6020	76.2975	77.9930	79.6885	81.3840	84.7750	88.1660	91.5570	94.9480	98.3390
878	.5160	.2115	.9070	.6025	.2980	.9936	.6891	.3846	.7756	.1666	.5576	.9487	.3397
881	.5165	.2120	.9075	.6031	.2986	.9941	.6896	.3852	.7762	.1672	.5583	.9493	.3404
884	.5170	.2125	.9080	.6036	.2991	.9947	.6902	.3857	.7768	.1679	.5589	.9500	.3411
887	.5175	.2130	.9086	.6041	.2997	.9952	.6908	.3863	.7774	.1685	.5596	.9507	.3418
423890	69.5180	71.2135	72.9091	74.6046	76.3002	77.9958	79.6913	81.3869	84.7780	88.1691	91.5602	94.9514	98.3425
893	.5185	.2140	.9096	.6052	.3007	.9963	.6919	.3875	.7786	.1697	.5609	.9520	.3432
896	.5189	.2145	.9101	.6057	.3013	.9969	.6924	.3880	.7792	.1704	.5615	.9527	.3439
899	.5194	.2150	.9106	.6062	.3018	.9974	.6930	.3886	.7798	.1710	.5622	.9534	.3446
902	.5199	.2155	.9111	.6068	.3024	.9980	.6936	.3892	.7804	.1716	.5628	.9540	.3453
423905	69.5204	71.2160	72.9117	74.6073	76.3029	77.9985	79.6941	81.3898	84.7810	88.1722	91.5635	94.9547	98.3460
908	.5209	.2165	.9122	.6078	.3034	.9991	.6947	.3903	.7816	.1729	.5641	.9554	.3467
911	.5214	.2170	.9127	.6083	.3040	.9996	.6953	.3909	.7822	.1735	.5648	.9561	.3474
914	.5219	.2176	.9132	.6089	.3045	78.0002	.6958	.3915	.7828	.1741	.5654	.9567	.3480
917	.5224	.2181	.9137	.6094	.3051	.0007	.6964	.3921	.7834	.1747	.5661	.9574	.3487
423920	69.5229	71.2186	72.9142	74.6099	76.3056	78.0013	79.6970	81.3926	84.7840	88.1754	91.5667	94.9581	98.3494
923	.5234	.2191	.9148	.6104	.3061	.0018	.6975	.3932	.7846	.1760	.5674	.9588	.3501
926	.5239	.2196	.9153	.6110	.3067	.0024	.6981	.3938	.7852	.1766	.5680	.9594	.3508
929	.5244	.2201	.9158	.6115	.3072	.0029	.6987	.3944	.7858	.1772	.5687	.9601	.3515
932	.5248	.2206	.9163	.6120	.3078	.0035	.6992	.3949	.7864	.1779	.5693	.9608	.3522
423935	69.5253	71.2211	72.9168	74.6126	76.3083	78.0040	79.6998	81.3955	84.7870	88.1785	91.5700	94.9614	98.3529
938	.5258	.2216	.9173	.6131	.3088	.0046	.7003	.3961	.7876	.1791	.5706	.9621	.3536
941	.5263	.2221	.9179	.6136	.3094	.0051	.7009	.3967	.7882	.1797	.5713	.9628	.3543
944	.5268	.2226	.9184	.6141	.3099	.0057	.7015	.3972	.7888	.1804	.5719	.9635	.3550
947	.5273	.2231	.9189	.6147	.3105	.0062	.7020	.3978	.7894	.1810	.5726	.9641	.3557
423950	69.5278	71.2236	72.9194	74.6152	76.3110	78.0068	79.7026	81.3984	84.7900	88.1816	91.5732	94.9648	98.3564
953	.5283	.2241	.9199	.6157	.3115	.0074	.7032	.3990	.7906	.1822	.5738	.9655	.3571
956	.5288	.2246	.9204	.6163	.3121	.0079	.7037	.3996	.7912	.1828	.5745	.9661	.3578
959	.5293	.2251	.9209	.6168	.3126	.0085	.7043	.4001	.7918	.1835	.5751	.9668	.3585
962	.5298	.2256	.9215	.6173	.3132	.0090	.7049	.4007	.7924	.1841	.5758	.9675	.3592
423965	69.5303	71.2261	72.9220	74.6178	76.3137	78.0096	79.7054	81.4013	84.7930	88.1847	91.5764	94.9682	98.3599
968	.5308	.2266	.9225	.6184	.3142	.0101	.7060	.4019	.7936	.1853	.5771	.9688	.3606
971	.5312	.2271	.9230	.6189	.3148	.0107	.7065	.4024	.7942	.1860	.5777	.9695	.3613
974	.5317	.2276	.9235	.6194	.3153	.0112	.7071	.4030	.7948	.1866	.5784	.9702	.3620
977	.5322	.2281	.9240	.6200	.3159	.0118	.7077	.4036	.7954	.1872	.5790	.9708	.3627
423980	69.5327	71.2286	72.9246	74.6205	76.3164	78.0123	79.7082	81.4042	84.7960	88.1878	91.5797	94.9715	98.3634
983	.5332	.2291	.9251	.6210	.3169	.0129	.7088	.4047	.7966	.1885	.5803	.9722	.3641
986	.5337	.2296	.9256	.6215	.3175	.0134	.7094	.4053	.7972	.1891	.5810	.9729	.3648
989	.5342	.2302	.9261	.6221	.3180	.0140	.7099	.4059	.7978	.1897	.5816	.9735	.3654
992	.5347	.2307	.9266	.6226	.3186	.0145	.7105	.4065	.7984	.1903	.5823	.9742	.3661
423995	69.5352	71.2312	72.9271	74.6231	76.3191	78.0151	79.7111	81.4070	84.7990	88.1910	91.5829	94.9749	98.3668
998	.5357	.2317	.9277	.6236	.3196	.0156	.7116	.4076	.7996	.1916	.5836	.9756	.3675
424001	.5362	.2322	.9282	.6242	.3202	.0162	.7122	.4082	.8002	.1922	.5842	.9762	.3682
004	.5367	.2327	.9287	.6247	.3207	.0167	.7128	.4088	.8008	.1928	.5849	.9769	.3689
007	.5371	.2332	.9292	.6252	.3213	.0173	.7133	.4093	.8014	.1935	.5855	.9776	.3696
424010	69.5376	71.2337	72.9297	74.6258	76.3218	78.0178	79.7139	81.4099	84.8020	88.1941	91.5862	94.9782	98.3703
013	.5381	.2342	.9302	.6263	.3223	.0184	.7144	.4105	.8026	.1947	.5868	.9789	.3710
016	.5386	.2347	.9308	.6268	.3229	.0189	.7150	.4111	.8032	.1953	.5875	.9796	.3717
019	.5391	.2352	.9313	.6273	.3234	.0195	.7156	.4116	.8038	.1960	.5881	.9803	.3724
022	.5396	.2357	.9318	.6279	.3240	.0200	.7161	.4122	.8044	.1966	.5888	.9809	.3731
424025	69.5401	71.2362	72.9323	74.6284	76.3245	78.0206	79.7167	81.4128	84.8050	88.1972	91.5894	94.9816	98.3738
028	.5406	.2367	.9328	.6289	.3250	.0212	.7173	.4134	.8056	.1978	.5900	.9823	.3745
031	.5411	.2372	.9333	.6295	.3256	.0217	.7178	.4140	.8062	.1984	.5907	.9829	.3752
034	.5416	.2377	.9338	.6300	.3261	.0223	.7184	.4145	.8068	.1991	.5913	.9836	.3759
037	.5421	.2382	.9344	.6305	.3267	.0228	.7190	.4151	.8074	.1997	.5920	.9843	.3766
424040	69.5426	71.2387	72.9349	74.6310	76.3272	78.0234	79.7195	81.4157	84.8080	88.2003	91.5926	94.9850	98.3773
043	.5431	.2392	.9354	.6316	.3277	.0239	.7201	.4163	.8086	.2009	.5933	.9856	.3780
046	.5435	.2397	.9359	.6321	.3283	.0245	.7206	.4168	.8092	.2016	.5939	.9863	.3787
049	.5440	.2402	.9364	.6326	.3288	.0250	.7212	.4174	.8098	.2022	.5946	.9870	.3794
052	.5445	.2407	.9369	.6332	.3294	.0256	.7218	.4180	.8104	.2028	.5952	.9876	.3801
424055	69.5450	71.2412	72.9375	74.6337	76.3299	78.0261	79.7223	81.4186	84.8110	88.2034	91.5959	94.9883	98.3808
058	.5455	.2417	.9380	.6342	.3304	.0267	.7229	.4191	.8116	.2041	.5965	.9890	.3815
061	.5460	.2422	.9385	.6347	.3310	.0272	.7235	.4197	.8122	.2047	.5972	.9897	.3822
064	.5465	.2428	.9390	.6353	.3315	.0278	.7240	.4203	.8128	.2053	.5978	.9903	.3828
067	.5470	.2433	.9395	.6358	.3321	.0283	.7246	.4209	.8134	.2059	.5985	.9910	.3835
424070	69.5475	71.2438	72.9400	74.6363	76.3326	78.0289	79.7252	81.4214	84.8140	88.2066	91.5991	94.9917	98.3842
073	.5480	.2443	.9406	.6368	.3331	.0294	.7257	.4220	.8146	.2072	.5998	.9924	.3849
076	.5485	.2448	.9411	.6374	.3337	.0300	.7263	.4226	.8152	.2078	.6004	.9930	.3856
079	.5490	.2453	.9416	.6379	.3342	.0305	.7269	.4232	.8158	.2084	.6011	.9937	.3863
082	.5494	.2458	.9421	.6384	.3348	.0311	.7274	.4237	.8164	.2091	.6017	.9944	.3870
424085	69.5499	71.2463	72.9426	74.6390	76.3353	78.0316	79.7280	81.4243	84.8170	88.2097	91.6024	94.9950	98.3877
088	.5504	.2468	.9431	.6395	.3358	.0322	.7285	.4249	.8176	.2103	.6030	.9957	.3884
091	.5509	.2473	.9437	.6400	.3364	.0327	.7291	.4255	.8182	.2109	.6037	.9964	.3891
094	.5514	.2478	.9442	.6405	.3369	.0333	.7297	.4260	.8188	.2116	.6043	.9971	.3898
097	.5519	.2483	.9447	.6411	.3375	.0338	.7302	.4266	.8194	.2122	.6050	.9977	.3905
424100	69.5524	71.2488	72.9452	74.6416	76.3380	78.0344	79.7308	81.4272	84.8200	88.2128	91.6056	94.9984	98.3912

H A R M O N I C S

BASIC FREQ.	112	116	120	124	128	132	136	140	144	148	152	156	160
424100	47.4992	49.1956	50.8920	52.5884	54.2848	55.9812	57.6776	59.3740	61.0704	62.7668	64.4632	66.1596	67.8560
103	.4995	.1959	.8924	.5888	.2852	.9816	.6780	.3744	.0708	.7672	.4637	.1601	.8565
106	.4999	.1963	.8927	.5891	.2856	.9820	.6784	.3748	.0713	.7677	.4641	.1605	.8570
109	.5002	.1966	.8931	.5895	.2860	.9824	.6788	.3753	.0717	.7681	.4646	.1610	.8574
112	.5005	.1970	.8934	.5899	.2863	.9828	.6792	.3757	.0721	.7686	.4650	.1615	.8579
424115	47.5009	49.1973	50.8938	52.5903	54.2867	55.9832	57.6796	59.3761	61.0726	62.7690	64.4655	66.1619	67.8584
118	.5012	.1977	.8942	.5906	.2871	.9836	.6800	.3765	.0730	.7695	.4659	.1624	.8589
121	.5016	.1980	.8945	.5910	.2875	.9840	.6805	.3769	.0734	.7699	.4664	.1629	.8594
124	.5019	.1984	.8949	.5914	.2879	.9844	.6809	.3774	.0739	.7704	.4668	.1633	.8598
127	.5022	.1987	.8952	.5917	.2883	.9848	.6813	.3778	.0743	.7708	.4673	.1638	.8603
424130	47.5026	49.1991	50.8956	52.5921	54.2886	55.9852	57.6817	59.3782	61.0747	62.7712	64.4678	66.1643	67.8608
133	.5029	.1994	.8960	.5925	.2890	.9856	.6821	.3786	.0752	.7717	.4682	.1647	.8613
136	.5032	.1998	.8963	.5929	.2894	.9860	.6825	.3790	.0756	.7721	.4687	.1652	.8618
139	.5036	.2001	.8967	.5932	.2898	.9863	.6829	.3795	.0760	.7726	.4691	.1657	.8622
142	.5039	.2005	.8970	.5936	.2902	.9867	.6833	.3799	.0764	.7730	.4696	.1662	.8627
424145	47.5042	49.2008	50.8974	52.5940	54.2906	55.9871	57.6837	59.3803	61.0769	62.7735	64.4700	66.1666	67.8632
148	.5046	.2012	.8978	.5944	.2909	.9875	.6841	.3807	.0773	.7739	.4705	.1671	.8637
151	.5049	.2015	.8981	.5947	.2913	.9879	.6845	.3811	.0777	.7743	.4710	.1676	.8642
154	.5052	.2019	.8985	.5951	.2917	.9883	.6849	.3816	.0782	.7748	.4714	.1680	.8646
157	.5056	.2022	.8988	.5955	.2921	.9887	.6854	.3820	.0786	.7752	.4719	.1685	.8651
424160	47.5059	49.2026	50.8992	52.5958	54.2925	55.9891	57.6858	59.3824	61.0790	62.7757	64.4723	66.1690	67.8656
163	.5063	.2029	.8996	.5962	.2929	.9895	.6862	.3828	.0795	.7761	.4728	.1694	.8661
166	.5066	.2033	.8999	.5966	.2932	.9899	.6866	.3832	.0799	.7766	.4732	.1699	.8666
169	.5069	.2036	.9003	.5970	.2936	.9903	.6870	.3837	.0803	.7770	.4737	.1704	.8670
172	.5073	.2040	.9006	.5973	.2940	.9907	.6874	.3841	.0808	.7775	.4741	.1708	.8675
424175	47.5076	49.2043	50.9010	52.5977	54.2944	55.9911	57.6878	59.3845	61.0812	62.7779	64.4746	66.1713	67.8680
178	.5079	.2046	.9014	.5981	.2948	.9915	.6882	.3849	.0816	.7783	.4751	.1718	.8685
181	.5083	.2050	.9017	.5984	.2952	.9919	.6886	.3853	.0821	.7788	.4755	.1722	.8690
184	.5086	.2053	.9021	.5988	.2956	.9923	.6890	.3858	.0825	.7792	.4760	.1727	.8694
187	.5089	.2057	.9024	.5992	.2959	.9927	.6894	.3862	.0829	.7797	.4764	.1732	.8699
424190	47.5093	49.2060	50.9028	52.5996	54.2963	55.9931	57.6898	59.3866	61.0834	62.7801	64.4769	66.1736	67.8704
193	.5096	.2064	.9032	.5999	.2967	.9935	.6902	.3870	.0838	.7806	.4773	.1741	.8709
196	.5100	.2067	.9035	.6003	.2971	.9939	.6907	.3874	.0842	.7810	.4778	.1746	.8714
199	.5103	.2071	.9039	.6007	.2975	.9943	.6911	.3879	.0847	.7815	.4782	.1750	.8718
202	.5106	.2074	.9042	.6010	.2979	.9947	.6915	.3883	.0851	.7819	.4787	.1755	.8723
424205	47.5110	49.2078	50.9046	52.6014	54.2982	55.9951	57.6919	59.3887	61.0855	62.7823	64.4792	66.1760	67.8728
208	.5113	.2081	.9050	.6018	.2986	.9955	.6923	.3891	.0860	.7828	.4796	.1764	.8733
211	.5116	.2085	.9053	.6022	.2990	.9959	.6927	.3895	.0864	.7832	.4801	.1769	.8738
214	.5120	.2088	.9057	.6025	.2994	.9962	.6931	.3900	.0868	.7837	.4805	.1774	.8742
217	.5123	.2092	.9060	.6029	.2998	.9966	.6935	.3904	.0872	.7841	.4810	.1779	.8747
424220	47.5126	49.2095	50.9064	52.6033	54.3002	55.9970	57.6939	59.3908	61.0877	62.7846	64.4814	66.1783	67.8752
223	.5130	.2099	.9068	.6037	.3005	.9974	.6943	.3912	.0881	.7850	.4819	.1788	.8757
226	.5133	.2102	.9071	.6040	.3009	.9978	.6947	.3916	.0885	.7854	.4824	.1793	.8762
229	.5136	.2106	.9075	.6044	.3013	.9982	.6951	.3921	.0890	.7859	.4828	.1797	.8766
232	.5140	.2109	.9078	.6048	.3017	.9986	.6956	.3925	.0894	.7863	.4833	.1802	.8771
424235	47.5143	49.2113	50.9082	52.6051	54.3021	55.9990	57.6960	59.3929	61.0898	62.7868	64.4837	66.1807	67.8776
238	.5147	.2116	.9086	.6055	.3025	.9994	.6964	.3933	.0903	.7872	.4842	.1811	.8781
241	.5150	.2120	.9089	.6059	.3028	.9998	.6968	.3937	.0907	.7877	.4846	.1816	.8786
244	.5153	.2123	.9093	.6063	.3032	56.0002	.6972	.3942	.0911	.7881	.4851	.1821	.8790
247	.5157	.2127	.9096	.6066	.3036	.0006	.6976	.3946	.0916	.7886	.4855	.1825	.8795
424250	47.5160	49.2130	50.9100	52.6070	54.3040	56.0010	57.6980	59.3950	61.0920	62.7890	64.4860	66.1830	67.8800
253	.5163	.2133	.9104	.6074	.3044	.0014	.6984	.3954	.0924	.7894	.4865	.1835	.8805
256	.5167	.2137	.9107	.6077	.3048	.0018	.6988	.3958	.0929	.7899	.4869	.1839	.8810
259	.5170	.2140	.9111	.6081	.3052	.0022	.6992	.3963	.0933	.7903	.4874	.1844	.8814
262	.5173	.2144	.9114	.6085	.3055	.0026	.6996	.3967	.0937	.7908	.4878	.1849	.8819
424265	47.5177	49.2147	50.9118	52.6089	54.3059	56.0030	57.7000	59.3971	61.0942	62.7912	64.4883	66.1853	67.8824
268	.5180	.2151	.9122	.6092	.3063	.0034	.7004	.3975	.0946	.7917	.4887	.1858	.8829
271	.5184	.2154	.9125	.6096	.3067	.0038	.7009	.3979	.0950	.7921	.4892	.1863	.8834
274	.5187	.2158	.9129	.6100	.3071	.0042	.7013	.3984	.0955	.7926	.4896	.1867	.8838
277	.5190	.2161	.9132	.6103	.3075	.0046	.7017	.3988	.0959	.7930	.4901	.1872	.8843
424280	47.5194	49.2165	50.9136	52.6107	54.3078	56.0050	57.7021	59.3992	61.0963	62.7934	64.4906	66.1877	67.8848
283	.5197	.2168	.9140	.6111	.3082	.0054	.7025	.3996	.0968	.7939	.4910	.1881	.8853
286	.5200	.2172	.9143	.6115	.3086	.0058	.7029	.4000	.0972	.7943	.4915	.1886	.8858
289	.5204	.2175	.9147	.6118	.3090	.0061	.7033	.4005	.0976	.7948	.4919	.1891	.8862
292	.5207	.2179	.9150	.6122	.3094	.0065	.7037	.4009	.0980	.7952	.4924	.1896	.8867
424295	47.5210	49.2182	50.9154	52.6126	54.3098	56.0069	57.7041	59.4013	61.0985	62.7957	64.4928	66.1900	67.8872
298	.5214	.2186	.9158	.6130	.3101	.0073	.7045	.4017	.0989	.7961	.4933	.1905	.8877
301	.5217	.2189	.9161	.6133	.3105	.0077	.7049	.4021	.0993	.7965	.4938	.1910	.8882
304	.5220	.2193	.9165	.6137	.3109	.0081	.7053	.4026	.0998	.7970	.4942	.1914	.8886
307	.5224	.2196	.9168	.6141	.3113	.0085	.7058	.4030	.1002	.7974	.4947	.1919	.8891
424310	47.5227	49.2200	50.9172	52.6144	54.3117	56.0089	57.7062	59.4034	61.1006	62.7979	64.4951	66.1924	67.8896
313	.5231	.2203	.9176	.6148	.3121	.0093	.7066	.4038	.1011	.7983	.4956	.1928	.8901
316	.5234	.2207	.9179	.6152	.3124	.0097	.7070	.4042	.1015	.7988	.4960	.1933	.8906
319	.5237	.2210	.9183	.6156	.3128	.0101	.7074	.4047	.1019	.7992	.4965	.1938	.8910
322	.5241	.2214	.9186	.6159	.3132	.0105	.7078	.4051	.1024	.7997	.4969	.1942	.8915
424325	47.5244	49.2217	50.9190	52.6163	54.3136	56.0109	57.7082	59.4055	61.1028	62.8001	64.4974	66.1947	67.8920
328	.5247	.2220	.9194	.6167	.3140	.0113	.7086	.4059	.1032	.8005	.4979	.1952	.8925
331	.5251	.2224	.9197	.6170	.3144	.0117	.7090	.4063	.1037	.8010	.4983	.1956	.8930
334	.5254	.2227	.9201	.6174	.3148	.0121	.7094	.4068	.1041	.8014	.4988	.1961	.8934
337	.5257	.2231	.9204	.6178	.3151	.0125	.7098	.4072	.1045	.8019	.4992	.1966	.8939
424340	47.5261	49.2234	50.9208	52.6182	54.3155	56.0129	57.7102	59.4076	61.1050	62.8023	64.4997	66.1970	67.8944
343	.5264	.2238	.9212	.6185	.3159	.0133	.7106	.4080	.1054	.8028	.5001	.1975	.8949
346	.5268	.2241	.9215	.6189	.3163	.0137	.7111	.4084	.1058	.8032	.5006	.1980	.8954
349	.5271	.2245	.9219	.6193	.3167	.0141	.7115	.4089	.1063	.8037	.5010	.1984	.8958
352	.5274	.2248	.9222	.6196	.3171	.0145	.7119	.4093	.1067	.8041	.5015	.1989	.8963
424355	47.5278	49.2252	50.9226	52.6200	54.3174	56.0149	57.7123	59.4097	61.1071	62.8045	64.5020	66.1994	67.8968
358	.5281	.2255	.9230	.6204	.3178	.0153	.7127	.4101	.1076	.8050	.5024	.1998	.8973
361	.5284	.2259	.9233	.6208	.3182	.0157	.7131	.4105	.1080	.8054	.5029	.2003	.8978
364	.5288	.2262	.9237	.6211	.3186	.0160	.7135	.4110	.1084	.8059	.5033	.2008	.8982
367	.5291	.2266	.9240	.6215	.3190	.0164	.7139	.4114	.1088	.8063	.5038	.2013	.8987
424370	47.5294	49.2269	50.9244	52.6219	54.3194	56.0168	57.7143	59.4118	61.1093	62.8068	64.5042	66.2017	67.8992
373	.5298	.2273	.9248	.6223	.3197	.0172	.7147	.4122	.1097	.8072	.5047	.2022	.8997
376	.5301	.2276	.9251	.6226	.3201	.0176	.7151	.4126	.1101	.8076	.5052	.2027	.9002
379	.5304	.2280	.9255	.6230	.3205	.0180	.7155	.4131	.1106	.8081	.5056	.2031	.9006
382	.5308	.2283	.9258	.6234	.3209	.0184	.7160	.4135	.1110	.8085	.5061	.2036	.9011
424385	47.5311	49.2287	50.9262	52.6237	54.3213	56.0188	57.7164	59.4139	61.1114	62.8090	64.5065	66.2041	67.9016
388	.5315	.2290	.9266	.6241	.3217	.0192	.7168	.4143	.1119	.8094	.5070	.2045	.9021
391	.5318	.2294	.9269	.6245	.3220	.0196	.7172	.4147	.1123	.8099	.5074	.2050	.9026
394	.5321	.2297	.9273	.6249	.3224	.0200	.7176	.4152	.1127	.8103	.5079	.2055	.9030
397	.5325	.2301	.9276	.6252	.3228	.0204	.7180	.4156	.1132	.8108	.5083	.2059	.9035
424400	47.5328	49.2304	50.9280	52.6256	54.3232	56.0208	57.7184	59.4160	61.1136	62.8112	64.5088	66.2064	67.9040

MEGACYCLES PER SECOND

BASIC FREQ.	HARMONICS 164	168	172	176	180	184	188	192	200	208	216	224	232
424100	69.5524	71.2488	72.9452	74.6416	76.3380	78.0344	79.7308	81.4272	84.8200	88.2128	91.6056	94.9984	98.3912
103	.5529	.2493	.9457	.6421	.3385	.0350	.7314	.4278	.8206	.2134	.6062	.9991	.3919
106	.5534	.2498	.9462	.6427	.3391	.0355	.7319	.4284	.8212	.2140	.6069	.9997	.3926
109	.5539	.2503	.9467	.6432	.3396	.0361	.7325	.4289	.8218	.2147	.6075	95.0004	.3933
112	.5544	.2508	.9473	.6437	.3402	.0366	.7331	.4295	.8224	.2153	.6082	.0011	.3940
424115	69.5549	71.2513	72.9478	74.6442	76.3407	78.0372	79.7336	81.4301	84.8230	88.2159	91.6088	95.0018	98.3947
118	.5554	.2518	.9483	.6448	.3412	.0377	.7342	.4307	.8236	.2165	.6095	.0024	.3954
121	.5558	.2523	.9488	.6453	.3418	.0383	.7347	.4312	.8242	.2172	.6101	.0031	.3961
124	.5563	.2528	.9493	.6458	.3423	.0388	.7353	.4318	.8248	.2178	.6108	.0038	.3968
127	.5568	.2533	.9498	.6464	.3429	.0394	.7359	.4324	.8254	.2184	.6114	.0044	.3975
424130	69.5573	71.2538	72.9504	74.6469	76.3434	78.0399	79.7364	81.4330	84.8260	88.2190	91.6121	95.0051	98.3982
133	.5578	.2543	.9509	.6474	.3439	.0405	.7370	.4335	.8266	.2197	.6127	.0058	.3989
136	.5583	.2548	.9514	.6479	.3445	.0410	.7376	.4341	.8272	.2203	.6134	.0065	.3992
139	.5588	.2554	.9519	.6485	.3450	.0416	.7381	.4347	.8278	.2209	.6140	.0071	.4006
142	.5593	.2559	.9524	.6490	.3456	.0421	.7387	.4353	.8284	.2215	.6147	.0078	.4009
424145	69.5598	71.2564	72.9529	74.6495	76.3461	78.0427	79.7393	81.4358	84.8290	88.2222	91.6153	95.0085	98.4016
148	.5603	.2569	.9535	.6500	.3466	.0432	.7398	.4364	.8296	.2228	.6160	.0092	.4023
151	.5608	.2574	.9540	.6506	.3472	.0438	.7404	.4370	.8302	.2234	.6166	.0098	.4030
154	.5613	.2579	.9545	.6511	.3477	.0443	.7410	.4376	.8308	.2240	.6173	.0105	.4037
157	.5617	.2584	.9550	.6516	.3483	.0449	.7415	.4381	.8314	.2247	.6179	.0112	.4044
424160	69.5622	71.2589	72.9555	74.6522	76.3488	78.0454	79.7421	81.4387	84.8320	88.2253	91.6186	95.0118	98.4051
163	.5627	.2594	.9560	.6527	.3493	.0460	.7426	.4393	.8326	.2259	.6192	.0125	.4058
166	.5632	.2599	.9566	.6532	.3499	.0465	.7432	.4399	.8332	.2265	.6199	.0132	.4065
169	.5637	.2604	.9571	.6537	.3504	.0471	.7438	.4404	.8338	.2272	.6205	.0139	.4072
172	.5642	.2609	.9576	.6543	.3510	.0476	.7443	.4410	.8344	.2278	.6212	.0145	.4079
424175	69.5647	71.2614	72.9581	74.6548	76.3515	78.0482	79.7449	81.4416	84.8350	88.2284	91.6218	95.0152	98.4086
178	.5652	.2619	.9586	.6553	.3520	.0488	.7455	.4422	.8356	.2290	.6224	.0159	.4093
181	.5657	.2624	.9591	.6559	.3526	.0493	.7460	.4428	.8362	.2296	.6231	.0165	.4100
184	.5662	.2629	.9596	.6564	.3531	.0499	.7466	.4433	.8368	.2303	.6237	.0172	.4107
187	.5667	.2634	.9602	.6569	.3537	.0504	.7472	.4439	.8374	.2309	.6244	.0179	.4114
424190	69.5672	71.2639	72.9607	74.6574	76.3542	78.0510	79.7477	81.4445	84.8380	88.2315	91.6250	95.0186	98.4121
193	.5677	.2644	.9612	.6580	.3547	.0515	.7483	.4451	.8386	.2321	.6257	.0192	.4128
196	.5681	.2649	.9617	.6585	.3553	.0521	.7488	.4456	.8392	.2328	.6263	.0199	.4135
199	.5686	.2654	.9622	.6590	.3558	.0526	.7494	.4462	.8398	.2334	.6270	.0206	.4142
202	.5691	.2659	.9627	.6596	.3564	.0532	.7500	.4468	.8404	.2340	.6276	.0212	.4149
424205	69.5696	71.2664	72.9633	74.6601	76.3569	78.0537	79.7505	81.4474	84.8410	88.2346	91.6283	95.0219	98.4156
208	.5701	.2669	.9638	.6606	.3574	.0543	.7511	.4479	.8416	.2353	.6289	.0226	.4163
211	.5706	.2674	.9643	.6611	.3580	.0548	.7517	.4485	.8422	.2359	.6296	.0233	.4170
214	.5711	.2680	.9648	.6617	.3585	.0554	.7522	.4491	.8428	.2365	.6302	.0239	.4176
217	.5716	.2685	.9653	.6622	.3591	.0559	.7528	.4497	.8434	.2371	.6309	.0246	.4183
424220	69.5721	71.2690	72.9658	74.6627	76.3596	78.0565	79.7534	81.4502	84.8440	88.2378	91.6315	95.0253	98.4190
223	.5726	.2695	.9664	.6632	.3601	.0570	.7539	.4508	.8446	.2384	.6322	.0260	.4197
226	.5731	.2700	.9669	.6638	.3607	.0576	.7545	.4514	.8452	.2390	.6328	.0266	.4204
229	.5736	.2705	.9674	.6643	.3612	.0581	.7551	.4520	.8458	.2396	.6335	.0273	.4211
232	.5740	.2710	.9679	.6648	.3618	.0587	.7556	.4525	.8464	.2403	.6341	.0280	.4218
424235	69.5745	71.2715	72.9684	74.6654	76.3623	78.0592	79.7562	81.4531	84.8470	88.2409	91.6348	95.0286	98.4225
238	.5750	.2720	.9689	.6659	.3628	.0598	.7567	.4537	.8476	.2415	.6354	.0293	.4232
241	.5755	.2725	.9695	.6664	.3634	.0603	.7573	.4543	.8482	.2421	.6361	.0300	.4239
244	.5760	.2730	.9700	.6669	.3639	.0609	.7579	.4548	.8488	.2428	.6367	.0307	.4246
247	.5765	.2735	.9705	.6675	.3645	.0614	.7584	.4554	.8494	.2434	.6374	.0313	.4253
424250	69.5770	71.2740	72.9710	74.6680	76.3650	78.0620	79.7590	81.4560	84.8500	88.2440	91.6380	95.0320	98.4260
253	.5775	.2745	.9715	.6685	.3655	.0626	.7596	.4566	.8506	.2446	.6386	.0327	.4267
256	.5780	.2750	.9720	.6691	.3661	.0631	.7601	.4572	.8512	.2452	.6393	.0333	.4274
259	.5785	.2755	.9725	.6696	.3666	.0637	.7607	.4577	.8518	.2459	.6399	.0340	.4281
262	.5790	.2760	.9731	.6701	.3672	.0642	.7613	.4583	.8524	.2465	.6406	.0347	.4288
424265	69.5795	71.2765	72.9736	74.6706	76.3677	78.0648	79.7618	81.4589	84.8530	88.2471	91.6412	95.0354	98.4295
268	.5800	.2770	.9741	.6712	.3682	.0653	.7624	.4595	.8536	.2477	.6419	.0360	.4302
271	.5804	.2775	.9746	.6717	.3688	.0659	.7629	.4600	.8542	.2484	.6425	.0367	.4309
274	.5809	.2780	.9751	.6722	.3693	.0664	.7635	.4606	.8548	.2490	.6432	.0374	.4316
277	.5814	.2785	.9756	.6728	.3699	.0670	.7641	.4612	.8554	.2496	.6438	.0380	.4323
424280	69.5819	71.2790	72.9762	74.6733	76.3704	78.0675	79.7646	81.4618	84.8560	88.2502	91.6445	95.0387	98.4330
283	.5824	.2795	.9767	.6738	.3709	.0681	.7652	.4623	.8566	.2509	.6451	.0394	.4337
286	.5829	.2800	.9772	.6743	.3715	.0686	.7658	.4629	.8572	.2515	.6458	.0401	.4344
289	.5834	.2806	.9777	.6749	.3720	.0692	.7663	.4635	.8578	.2521	.6464	.0407	.4350
292	.5839	.2811	.9782	.6754	.3726	.0697	.7669	.4641	.8584	.2527	.6471	.0414	.4357
424295	69.5844	71.2816	72.9787	74.6759	76.3731	78.0703	79.7675	81.4646	84.8590	88.2534	91.6477	95.0421	98.4364
298	.5849	.2821	.9793	.6764	.3736	.0708	.7680	.4652	.8596	.2540	.6484	.0428	.4371
301	.5854	.2826	.9798	.6770	.3742	.0714	.7686	.4658	.8602	.2546	.6490	.0434	.4378
304	.5859	.2831	.9803	.6775	.3747	.0719	.7692	.4664	.8608	.2552	.6497	.0441	.4385
307	.5863	.2836	.9808	.6780	.3753	.0725	.7697	.4669	.8614	.2559	.6503	.0448	.4392
424310	69.5868	71.2841	72.9813	74.6786	76.3758	78.0730	79.7703	81.4675	84.8620	88.2565	91.6510	95.0454	98.4399
313	.5873	.2846	.9818	.6791	.3763	.0736	.7708	.4681	.8626	.2571	.6516	.0461	.4406
316	.5878	.2851	.9824	.6796	.3769	.0741	.7714	.4687	.8632	.2577	.6523	.0468	.4413
319	.5883	.2856	.9829	.6801	.3774	.0747	.7720	.4692	.8638	.2584	.6529	.0475	.4420
322	.5888	.2861	.9834	.6807	.3780	.0752	.7725	.4698	.8644	.2590	.6536	.0481	.4427
424325	69.5893	71.2866	72.9839	74.6812	76.3785	78.0758	79.7731	81.4704	84.8650	88.2596	91.6542	95.0488	98.4434
328	.5898	.2871	.9844	.6817	.3790	.0764	.7737	.4710	.8656	.2602	.6548	.0495	.4441
331	.5903	.2876	.9849	.6823	.3796	.0769	.7742	.4716	.8662	.2608	.6555	.0501	.4448
334	.5908	.2881	.9854	.6828	.3801	.0775	.7748	.4721	.8668	.2615	.6561	.0508	.4455
337	.5913	.2886	.9860	.6833	.3807	.0780	.7754	.4727	.8674	.2621	.6568	.0515	.4462
424340	69.5918	71.2891	72.9865	74.6838	76.3812	78.0786	79.7759	81.4733	84.8680	88.2627	91.6574	95.0522	98.4469
343	.5923	.2896	.9870	.6844	.3817	.0791	.7765	.4739	.8686	.2633	.6581	.0528	.4476
346	.5927	.2901	.9875	.6849	.3823	.0797	.7770	.4744	.8692	.2640	.6587	.0535	.4483
349	.5932	.2906	.9880	.6854	.3828	.0802	.7776	.4750	.8698	.2646	.6594	.0542	.4490
352	.5937	.2911	.9885	.6860	.3834	.0808	.7782	.4756	.8704	.2652	.6600	.0548	.4497
424355	69.5942	71.2916	72.9891	74.6865	76.3839	78.0813	79.7787	81.4762	84.8710	88.2658	91.6607	95.0555	98.4504
358	.5947	.2921	.9896	.6870	.3844	.0819	.7793	.4767	.8716	.2665	.6613	.0562	.4511
361	.5952	.2926	.9901	.6875	.3850	.0824	.7799	.4773	.8722	.2671	.6620	.0569	.4518
364	.5957	.2932	.9906	.6881	.3855	.0830	.7804	.4779	.8728	.2677	.6626	.0575	.4524
367	.5962	.2937	.9911	.6886	.3861	.0835	.7810	.4785	.8734	.2683	.6633	.0582	.4531
424370	69.5967	71.2942	72.9916	74.6891	76.3866	78.0841	79.7816	81.4790	84.8740	88.2690	91.6639	95.0589	98.4538
373	.5972	.2947	.9922	.6896	.3871	.0846	.7821	.4796	.8746	.2696	.6646	.0596	.4545
376	.5977	.2952	.9927	.6902	.3877	.0852	.7827	.4802	.8752	.2702	.6652	.0602	.4552
379	.5982	.2957	.9932	.6907	.3882	.0857	.7833	.4808	.8758	.2708	.6659	.0609	.4559
382	.5986	.2962	.9937	.6912	.3888	.0863	.7838	.4813	.8764	.2715	.6665	.0616	.4566
424385	69.5991	71.2967	72.9942	74.6918	76.3893	78.0868	79.7844	81.4819	84.8770	88.2721	91.6672	95.0622	98.4573
388	.5996	.2972	.9947	.6923	.3898	.0874	.7849	.4825	.8776	.2727	.6678	.0629	.4580
391	.6001	.2977	.9953	.6928	.3904	.0879	.7855	.4831	.8782	.2733	.6685	.0636	.4587
394	.6006	.2982	.9958	.6933	.3909	.0885	.7861	.4836	.8788	.2740	.6691	.0643	.4594
397	.6011	.2987	.9963	.6939	.3915	.0890	.7866	.4842	.8794	.2746	.6698	.0649	.4601
424400	69.6016	71.2992	72.9968	74.6944	76.3920	78.0896	79.7872	81.4848	84.8800	88.2752	91.6704	95.0656	98.4608

HARMONICS

BASIC FREQ.	112	116	120	124	128	132	136	140	144	148	152	156	160
424400	47.5328	49.2304	50.9280	52.6256	54.3232	56.0208	57.7184	59.4160	61.1136	62.8112	64.5088	66.2064	67.9040
403	.5331	.2307	.9284	.6260	.3236	.0212	.7188	.4164	.1140	.8116	.5093	.2069	.9045
406	.5335	.2311	.9287	.6263	.3240	.0216	.7192	.4168	.1145	.8121	.5097	.2073	.9050
409	.5338	.2314	.9291	.6267	.3244	.0220	.7196	.4173	.1149	.8125	.5102	.2078	.9054
412	.5341	.2318	.9294	.6271	.3247	.0224	.7200	.4177	.1153	.8130	.5106	.2083	.9059
424415	47.5345	49.2321	50.9298	52.6275	54.3251	56.0228	57.7204	59.4181	61.1158	62.8134	64.5111	66.2087	67.9064
418	.5348	.2325	.9302	.6278	.3255	.0232	.7208	.4185	.1162	.8139	.5115	.2092	.9069
421	.5352	.2328	.9305	.6282	.3259	.0236	.7213	.4189	.1166	.8143	.5120	.2097	.9074
424	.5355	.2332	.9309	.6286	.3263	.0240	.7217	.4194	.1171	.8148	.5124	.2101	.9078
427	.5358	.2335	.9312	.6289	.3267	.0244	.7221	.4198	.1175	.8152	.5129	.2106	.9083
424430	47.5362	49.2339	50.9316	52.6293	54.3270	56.0248	57.7225	59.4202	61.1179	62.8156	64.5134	66.2111	67.9088
433	.5365	.2342	.9320	.6297	.3274	.0252	.7229	.4206	.1184	.8161	.5138	.2115	.9093
436	.5368	.2346	.9323	.6301	.3278	.0256	.7233	.4210	.1188	.8165	.5143	.2120	.9098
439	.5372	.2349	.9327	.6304	.3282	.0259	.7237	.4215	.1192	.8170	.5147	.2125	.9102
442	.5375	.2353	.9330	.6308	.3286	.0263	.7241	.4219	.1196	.8174	.5152	.2130	.9107
424445	47.5378	49.2356	50.9334	52.6312	54.3290	56.0267	57.7245	59.4223	61.1201	62.8179	64.5156	66.2134	67.9112
448	.5382	.2360	.9338	.6316	.3293	.0271	.7249	.4227	.1205	.8183	.5161	.2139	.9117
451	.5385	.2363	.9341	.6319	.3297	.0275	.7253	.4231	.1209	.8187	.5166	.2144	.9122
454	.5388	.2367	.9345	.6323	.3301	.0279	.7257	.4236	.1214	.8192	.5170	.2148	.9126
457	.5392	.2370	.9348	.6327	.3305	.0283	.7262	.4240	.1218	.8196	.5175	.2153	.9131
424460	47.5395	49.2374	50.9352	52.6330	54.3309	56.0287	57.7266	59.4244	61.1222	62.8201	64.5179	66.2158	67.9136
463	.5399	.2377	.9356	.6334	.3313	.0291	.7270	.4248	.1227	.8205	.5184	.2162	.9141
466	.5402	.2381	.9359	.6338	.3316	.0295	.7274	.4252	.1231	.8210	.5188	.2167	.9146
469	.5405	.2384	.9363	.6342	.3320	.0299	.7278	.4257	.1235	.8214	.5193	.2172	.9150
472	.5409	.2388	.9366	.6345	.3324	.0303	.7282	.4261	.1240	.8219	.5197	.2176	.9155
424475	47.5412	49.2391	50.9370	52.6349	54.3328	56.0307	57.7286	59.4265	61.1244	62.8223	64.5202	66.2181	67.9160
478	.5415	.2394	.9374	.6353	.3332	.0311	.7290	.4269	.1248	.8227	.5207	.2186	.9165
481	.5419	.2398	.9377	.6356	.3336	.0315	.7294	.4273	.1253	.8232	.5211	.2190	.9170
484	.5422	.2401	.9381	.6360	.3340	.0319	.7298	.4278	.1257	.8236	.5216	.2195	.9174
487	.5425	.2405	.9384	.6364	.3343	.0323	.7302	.4282	.1261	.8241	.5220	.2200	.9179
424490	47.5429	49.2408	50.9388	52.6368	54.3347	56.0327	57.7306	59.4286	61.1266	62.8245	64.5225	66.2204	67.9184
493	.5432	.2412	.9392	.6371	.3351	.0331	.7310	.4290	.1270	.8250	.5229	.2209	.9189
496	.5436	.2415	.9395	.6375	.3355	.0335	.7315	.4294	.1274	.8254	.5234	.2214	.9194
499	.5439	.2419	.9399	.6379	.3359	.0339	.7319	.4299	.1279	.8259	.5238	.2218	.9198
502	.5442	.2422	.9402	.6382	.3363	.0343	.7323	.4303	.1283	.8263	.5243	.2223	.9203
424505	47.5446	49.2426	50.9406	52.6386	54.3366	56.0347	57.7327	59.4307	61.1287	62.8267	64.5248	66.2228	67.9208
508	.5449	.2429	.9410	.6390	.3370	.0351	.7331	.4311	.1292	.8272	.5252	.2232	.9213
511	.5452	.2433	.9413	.6394	.3374	.0355	.7335	.4315	.1296	.8286	.5257	.2237	.9218
514	.5456	.2436	.9417	.6397	.3378	.0358	.7339	.4320	.1300	.8281	.5261	.2242	.9222
517	.5459	.2440	.9420	.6401	.3382	.0362	.7343	.4324	.1304	.8285	.5266	.2247	.9227
424520	47.5462	49.2443	50.9424	52.6405	54.3386	56.0366	57.7347	59.4328	61.1309	62.8290	64.5270	66.2251	67.9232
523	.5466	.2447	.9428	.6409	.3389	.0370	.7351	.4332	.1313	.8294	.5275	.2256	.9237
526	.5469	.2450	.9431	.6412	.3393	.0374	.7355	.4336	.1317	.8298	.5280	.2261	.9242
529	.5472	.2454	.9435	.6416	.3397	.0378	.7359	.4341	.1322	.8303	.5284	.2265	.9246
532	.5476	.2457	.9438	.6420	.3401	.0382	.7364	.4345	.1326	.8307	.5289	.2270	.9251
424535	47.5479	49.2461	50.9442	52.6423	54.3405	56.0386	57.7368	59.4349	61.1330	62.8312	64.5293	66.2275	67.9256
538	.5483	.2464	.9446	.6427	.3409	.0390	.7372	.4353	.1335	.8316	.5298	.2279	.9261
541	.5486	.2468	.9449	.6431	.3412	.0394	.7376	.4357	.1339	.8321	.5302	.2284	.9266
544	.5489	.2471	.9453	.6435	.3416	.0398	.7380	.4362	.1343	.8325	.5307	.2289	.9270
547	.5493	.2475	.9456	.6438	.3420	.0402	.7384	.4366	.1348	.8330	.5311	.2293	.9275
424550	47.5496	49.2478	50.9460	52.6442	54.3424	56.0406	57.7388	59.4370	61.1352	62.8334	64.5316	66.2298	67.9280
553	.5499	.2481	.9464	.6446	.3428	.0410	.7392	.4374	.1356	.8338	.5321	.2303	.9285
556	.5503	.2485	.9467	.6449	.3432	.0414	.7396	.4378	.1361	.8343	.5325	.2307	.9290
559	.5506	.2488	.9471	.6453	.3436	.0418	.7400	.4383	.1365	.8347	.5330	.2312	.9294
562	.5509	.2492	.9474	.6457	.3439	.0422	.7404	.4387	.1369	.8352	.5334	.2317	.9299
424565	47.5513	49.2495	50.9478	52.6461	54.3443	56.0426	57.7408	59.4391	61.1374	62.8356	64.5339	66.2321	67.9304
568	.5516	.2499	.9482	.6464	.3447	.0430	.7412	.4395	.1378	.8361	.5343	.2326	.9309
571	.5520	.2502	.9485	.6468	.3451	.0434	.7417	.4399	.1382	.8365	.5348	.2331	.9314
574	.5523	.2506	.9489	.6472	.3455	.0438	.7421	.4404	.1387	.8370	.5352	.2335	.9318
577	.5526	.2509	.9492	.6475	.3459	.0442	.7425	.4408	.1391	.8374	.5357	.2340	.9323
424580	47.5530	49.2513	50.9496	52.6479	54.3462	56.0446	57.7429	59.4412	61.1395	62.8378	64.5362	66.2345	67.9328
583	.5533	.2516	.9500	.6483	.3466	.0450	.7433	.4416	.1400	.8383	.5366	.2349	.9333
586	.5536	.2520	.9503	.6487	.3470	.0454	.7437	.4420	.1404	.8387	.5371	.2354	.9338
589	.5540	.2523	.9507	.6490	.3474	.0457	.7441	.4425	.1408	.8392	.5375	.2359	.9342
592	.5543	.2527	.9510	.6494	.3478	.0461	.7445	.4429	.1412	.8396	.5380	.2364	.9347
424595	47.5546	49.2530	50.9514	52.6498	54.3482	56.0465	57.7449	59.4433	61.1417	62.8401	64.5384	66.2368	67.9352
598	.5550	.2534	.9518	.6502	.3485	.0469	.7453	.4437	.1421	.8405	.5389	.2373	.9357
601	.5553	.2537	.9521	.6505	.3489	.0473	.7457	.4441	.1425	.8409	.5394	.2378	.9362
604	.5556	.2541	.9525	.6509	.3493	.0477	.7461	.4446	.1430	.8414	.5398	.2382	.9366
607	.5560	.2544	.9528	.6513	.3497	.0481	.7466	.4450	.1434	.8418	.5403	.2387	.9371
424610	47.5563	49.2548	50.9532	52.6516	54.3501	56.0485	57.7470	59.4454	61.1438	62.8423	64.5407	66.2392	67.9376
613	.5567	.2551	.9536	.6520	.3505	.0489	.7474	.4458	.1443	.8427	.5412	.2396	.9381
616	.5570	.2555	.9539	.6524	.3508	.0493	.7478	.4462	.1447	.8432	.5416	.2401	.9386
619	.5573	.2558	.9543	.6528	.3512	.0497	.7482	.4467	.1451	.8436	.5421	.2406	.9390
622	.5577	.2562	.9546	.6531	.3516	.0501	.7486	.4471	.1456	.8441	.5425	.2410	.9395
424625	47.5580	49.2565	50.9550	52.6535	54.3520	56.0505	57.7490	59.4475	61.1460	62.8445	64.5430	66.2415	67.9400
628	.5583	.2568	.9554	.6539	.3524	.0509	.7494	.4479	.1464	.8449	.5435	.2420	.9405
631	.5587	.2572	.9557	.6542	.3528	.0513	.7498	.4483	.1469	.8454	.5439	.2424	.9410
634	.5590	.2575	.9561	.6546	.3532	.0517	.7502	.4488	.1473	.8458	.5444	.2429	.9414
637	.5593	.2579	.9564	.6550	.3535	.0521	.7506	.4492	.1477	.8463	.5448	.2434	.9419
424640	47.5597	49.2582	50.9568	52.6554	54.3539	56.0525	57.7510	59.4496	61.1482	62.8467	64.5453	66.2438	67.9424
643	.5600	.2586	.9572	.6557	.3543	.0529	.7514	.4500	.1486	.8472	.5457	.2443	.9429
646	.5604	.2589	.9575	.6561	.3547	.0533	.7519	.4504	.1490	.8476	.5462	.2448	.9434
649	.5607	.2593	.9579	.6565	.3551	.0537	.7523	.4509	.1495	.8481	.5466	.2452	.9438
652	.5610	.2596	.9582	.6568	.3555	.0541	.7527	.4513	.1499	.8485	.5471	.2457	.9443
424655	47.5614	49.2600	50.9586	52.6572	54.3558	56.0545	57.7531	59.4517	61.1503	62.8489	64.5476	66.2462	67.9448
658	.5617	.2603	.9590	.6576	.3562	.0549	.7535	.4521	.1508	.8494	.5480	.2466	.9453
661	.5620	.2607	.9593	.6580	.3566	.0553	.7539	.4525	.1512	.8498	.5485	.2471	.9458
664	.5624	.2610	.9597	.6583	.3570	.0556	.7543	.4530	.1516	.8503	.5489	.2476	.9462
667	.5627	.2614	.9600	.6587	.3574	.0560	.7547	.4534	.1520	.8507	.5494	.2481	.9467
424670	47.5630	49.2617	50.9604	52.6591	54.3578	56.0564	57.7551	59.4538	61.1525	62.8512	64.5498	66.2485	67.9472
673	.5634	.2621	.9608	.6595	.3581	.0568	.7555	.4542	.1529	.8516	.5503	.2490	.9477
676	.5637	.2624	.9611	.6598	.3585	.0572	.7559	.4546	.1533	.8520	.5508	.2495	.9482
679	.5640	.2628	.9615	.6602	.3589	.0576	.7563	.4551	.1538	.8525	.5512	.2499	.9486
682	.5644	.2631	.9618	.6606	.3593	.0580	.7568	.4555	.1542	.8529	.5517	.2504	.9491
424685	47.5647	49.2635	50.9622	52.6609	54.3597	56.0584	57.7572	59.4559	61.1546	62.8534	64.5521	66.2509	67.9496
688	.5651	.2638	.9626	.6613	.3601	.0588	.7576	.4563	.1551	.8538	.5526	.2513	.9501
691	.5654	.2642	.9629	.6617	.3604	.0592	.7580	.4567	.1555	.8543	.5530	.2518	.9506
694	.5657	.2645	.9633	.6621	.3608	.0596	.7584	.4572	.1559	.8547	.5535	.2523	.9510
697	.5661	.2649	.9636	.6624	.3612	.0600	.7588	.4576	.1564	.8552	.5539	.2527	.9515
424700	47.5664	49.2652	50.9640	52.6628	54.3616	56.0604	57.7592	59.4580	61.1568	62.8556	64.5544	66.2532	67.9520

MEGACYCLES PER SECOND

HARMONICS

BASIC FREQ.	164	168	172	176	180	184	188	192	200	208	216	224	232
424400	69.6016	71.2992	72.9968	74.6944	76.3920	78.0896	79.7872	81.4848	84.8800	88.2752	91.6704	95.0656	98.4608
403	.6021	.2997	.9973	.6949	.3925	.0902	.7878	.4854	.8806	.2758	.6710	.0663	.4615
406	.6026	.3002	.9978	.6955	.3931	.0907	.7883	.4860	.8812	.2764	.6717	.0669	.4622
409	.6031	.3007	.9983	.6960	.3936	.0913	.7889	.4865	.8818	.2771	.6723	.0676	.4629
412	.6036	.3012	.9989	.6965	.3942	.0918	.7895	.4871	.8824	.2777	.6730	.0683	.4636
424415	69.6041	71.3017	72.9994	74.6970	76.3947	78.0924	79.7900	81.4877	84.8830	88.2783	91.6736	95.0690	98.4643
418	.6046	.3022	.9999	.6976	.3952	.0929	.7906	.4883	.8836	.2789	.6743	.0696	.4650
421	.6050	.3027	73.0004	.6981	.3958	.0935	.7911	.4888	.8842	.2796	.6749	.0703	.4657
424	.6055	.3032	.0009	.6986	.3963	.0940	.7917	.4894	.8848	.2802	.6756	.0710	.4664
427	.6060	.3037	.0014	.6992	.3969	.0946	.7923	.4900	.8854	.2808	.6762	.0716	.4671
424430	69.6065	71.3042	73.0020	74.6997	76.3974	78.0951	79.7928	81.4906	84.8860	88.2814	91.6769	95.0723	98.4678
433	.6070	.3047	.0025	.7002	.3979	.0957	.7934	.4911	.8866	.2821	.6775	.0730	.4685
436	.6075	.3052	.0030	.7007	.3985	.0962	.7940	.4917	.8872	.2827	.6782	.0737	.4692
439	.6080	.3058	.0035	.7013	.3990	.0968	.7945	.4923	.8878	.2833	.6788	.0743	.4698
442	.6085	.3063	.0040	.7018	.3996	.0973	.7951	.4929	.8884	.2839	.6795	.0750	.4705
424445	69.6090	71.3068	73.0045	74.7023	76.4001	78.0979	79.7957	81.4934	84.8890	88.2846	91.6801	95.0757	98.4712
448	.6095	.3073	.0051	.7028	.4006	.0984	.7962	.4940	.8896	.2852	.6808	.0764	.4719
451	.6100	.3078	.0056	.7034	.4012	.0990	.7968	.4946	.8902	.2858	.6814	.0770	.4726
454	.6105	.3083	.0061	.7039	.4017	.0995	.7974	.4952	.8908	.2864	.6821	.0777	.4733
457	.6109	.3088	.0066	.7044	.4023	.1001	.7979	.4957	.8914	.2871	.6827	.0784	.4740
424460	69.6114	71.3093	73.0071	74.7050	76.4028	78.1006	79.7985	81.4963	84.8920	88.2877	91.6834	95.0790	98.4747
463	.6119	.3098	.0076	.7055	.4033	.1012	.7990	.4969	.8926	.2883	.6840	.0797	.4754
466	.6124	.3103	.0082	.7060	.4039	.1017	.7996	.4975	.8932	.2889	.6847	.0804	.4761
469	.6129	.3108	.0087	.7065	.4044	.1023	.8002	.4980	.8938	.2896	.6853	.0811	.4768
472	.6134	.3113	.0092	.7071	.4050	.1028	.8007	.4986	.8944	.2902	.6860	.0817	.4775
424475	69.6139	71.3118	73.0097	74.7076	76.4055	78.1034	79.8013	81.4992	84.8950	88.2908	91.6866	95.0824	98.4782
478	.6144	.3123	.0102	.7081	.4060	.1040	.8019	.4998	.8956	.2914	.6872	.0831	.4789
481	.6149	.3128	.0107	.7087	.4066	.1045	.8024	.5004	.8962	.2920	.6879	.0837	.4796
484	.6154	.3133	.0112	.7092	.4071	.1051	.8030	.5009	.8968	.2927	.6885	.0844	.4803
487	.6159	.3138	.0118	.7097	.4077	.1056	.8036	.5015	.8974	.2933	.6892	.0851	.4810
424490	69.6164	71.3143	73.0123	74.7102	76.4082	78.1062	79.8041	81.5021	84.8980	88.2939	91.6898	95.0858	98.4817
493	.6169	.3148	.0128	.7108	.4087	.1067	.8047	.5027	.8986	.2945	.6905	.0864	.4824
496	.6173	.3153	.0133	.7113	.4093	.1073	.8052	.5032	.8992	.2952	.6911	.0871	.4831
499	.6178	.3158	.0138	.7118	.4098	.1078	.8058	.5038	.8998	.2958	.6918	.0878	.4838
502	.6183	.3163	.0143	.7124	.4104	.1084	.8064	.5044	.9004	.2964	.6924	.0884	.4845
424505	69.6188	71.3168	73.0149	74.7129	76.4109	78.1089	79.8069	81.5050	84.9010	88.2970	91.6931	95.0891	98.4852
508	.6193	.3173	.0154	.7134	.4114	.1095	.8075	.5055	.9016	.2977	.6937	.0898	.4859
511	.6198	.3178	.0159	.7139	.4120	.1100	.8081	.5061	.9022	.2983	.6944	.0905	.4866
514	.6203	.3184	.0164	.7145	.4125	.1106	.8086	.5067	.9028	.2989	.6950	.0911	.4872
517	.6208	.3189	.0169	.7150	.4131	.1111	.8092	.5073	.9034	.2995	.6957	.0918	.4879
424520	69.6213	71.3194	73.0174	74.7155	76.4136	78.1117	79.8098	81.5078	84.9040	88.3002	91.6963	95.0925	98.4886
523	.6218	.3199	.0180	.7160	.4141	.1122	.8103	.5084	.9046	.3008	.6970	.0932	.4893
526	.6223	.3204	.0185	.7166	.4147	.1128	.8109	.5090	.9052	.3014	.6976	.0938	.4900
529	.6228	.3209	.0190	.7171	.4152	.1133	.8115	.5096	.9058	.3020	.6983	.0945	.4907
532	.6232	.3214	.0195	.7176	.4158	.1139	.8120	.5101	.9064	.3027	.6989	.0952	.4914
424535	69.6237	71.3219	73.0200	74.7182	76.4163	78.1144	79.8126	81.5107	84.9070	88.3033	91.6996	95.0958	98.4921
538	.6242	.3224	.0205	.7187	.4168	.1150	.8131	.5113	.9076	.3039	.7002	.0965	.4928
541	.6247	.3229	.0211	.7192	.4174	.1155	.8137	.5119	.9082	.3045	.7009	.0972	.4935
544	.6252	.3234	.0216	.7197	.4179	.1161	.8143	.5124	.9088	.3052	.7015	.0979	.4942
547	.6257	.3239	.0221	.7203	.4185	.1166	.8148	.5130	.9094	.3058	.7022	.0985	.4949
424550	69.6262	71.3244	73.0226	74.7208	76.4190	78.1172	79.8154	81.5136	84.9100	88.3064	91.7028	95.0992	98.4956
553	.6267	.3249	.0231	.7213	.4195	.1178	.8160	.5142	.9106	.3070	.7034	.0999	.4963
556	.6272	.3254	.0236	.7219	.4201	.1183	.8165	.5148	.9112	.3076	.7041	.1005	.4970
559	.6277	.3259	.0241	.7224	.4206	.1189	.8171	.5153	.9118	.3083	.7047	.1012	.4977
562	.6282	.3264	.0247	.7229	.4212	.1194	.8177	.5159	.9124	.3089	.7054	.1019	.4984
424565	69.6287	71.3269	73.0252	74.7234	76.4217	78.1200	79.8182	81.5165	84.9130	88.3095	91.7060	95.1026	98.4991
568	.6292	.3274	.0257	.7240	.4222	.1205	.8188	.5171	.9136	.3101	.7067	.1032	.4998
571	.6296	.3279	.0262	.7245	.4228	.1211	.8193	.5176	.9142	.3108	.7073	.1039	.5005
574	.6301	.3284	.0267	.7250	.4233	.1216	.8199	.5182	.9148	.3114	.7080	.1046	.5012
577	.6306	.3289	.0272	.7256	.4239	.1222	.8205	.5188	.9154	.3120	.7086	.1052	.5019
424580	69.6311	71.3294	73.0278	74.7261	76.4244	78.1227	79.8210	81.5194	84.9160	88.3126	91.7093	95.1059	98.5026
583	.6316	.3299	.0283	.7266	.4249	.1233	.8216	.5199	.9166	.3133	.7099	.1066	.5033
586	.6321	.3304	.0288	.7271	.4255	.1238	.8222	.5205	.9172	.3139	.7106	.1073	.5040
589	.6326	.3310	.0293	.7277	.4260	.1244	.8227	.5211	.9178	.3145	.7112	.1079	.5046
592	.6331	.3315	.0298	.7282	.4266	.1249	.8233	.5217	.9184	.3151	.7119	.1086	.5053
424595	69.6336	71.3320	73.0303	74.7287	76.4271	78.1255	79.8239	81.5222	84.9190	88.3158	91.7125	95.1093	98.5060
598	.6341	.3325	.0309	.7292	.4276	.1260	.8244	.5228	.9196	.3164	.7132	.1100	.5067
601	.6346	.3330	.0314	.7298	.4282	.1266	.8250	.5234	.9202	.3170	.7138	.1106	.5074
604	.6351	.3335	.0319	.7303	.4287	.1271	.8256	.5240	.9208	.3176	.7145	.1113	.5081
607	.6355	.3340	.0324	.7308	.4293	.1277	.8261	.5245	.9214	.3183	.7151	.1120	.5088
424610	69.6360	71.3345	73.0329	74.7314	76.4298	78.1282	79.8267	81.5251	84.9220	88.3189	91.7158	95.1126	98.5095
613	.6365	.3350	.0334	.7319	.4303	.1288	.8272	.5257	.9226	.3195	.7164	.1133	.5102
616	.6370	.3355	.0340	.7324	.4309	.1293	.8278	.5263	.9232	.3201	.7171	.1140	.5109
619	.6375	.3360	.0345	.7329	.4314	.1299	.8284	.5268	.9238	.3208	.7177	.1147	.5116
622	.6380	.3365	.0350	.7335	.4320	.1304	.8289	.5274	.9244	.3214	.7184	.1153	.5123
424625	69.6385	71.3370	73.0355	74.7340	76.4325	78.1310	79.8295	81.5280	84.9250	88.3220	91.7190	95.1160	98.5130
628	.6390	.3375	.0360	.7345	.4330	.1316	.8301	.5286	.9256	.3226	.7196	.1167	.5137
631	.6395	.3380	.0365	.7351	.4336	.1321	.8306	.5292	.9262	.3232	.7203	.1173	.5144
634	.6400	.3385	.0370	.7356	.4341	.1327	.8312	.5297	.9268	.3239	.7209	.1180	.5151
637	.6405	.3390	.0376	.7361	.4347	.1332	.8318	.5303	.9274	.3245	.7216	.1187	.5158
424640	69.6410	71.3395	73.0381	74.7366	76.4352	78.1338	79.8323	81.5309	84.9280	88.3251	91.7222	95.1194	98.5165
643	.6415	.3400	.0386	.7372	.4357	.1343	.8329	.5315	.9286	.3257	.7229	.1200	.5172
646	.6419	.3405	.0391	.7377	.4363	.1349	.8334	.5320	.9292	.3264	.7235	.1207	.5179
649	.6424	.3410	.0396	.7382	.4368	.1354	.8340	.5326	.9298	.3270	.7242	.1214	.5186
652	.6429	.3415	.0401	.7388	.4374	.1360	.8346	.5332	.9304	.3276	.7248	.1220	.5193
424655	69.6434	71.3420	73.0407	74.7393	76.4379	78.1365	79.8351	81.5338	84.9310	88.3282	91.7255	95.1227	98.5200
658	.6439	.3425	.0412	.7398	.4384	.1371	.8357	.5343	.9316	.3289	.7261	.1234	.5207
661	.6444	.3430	.0417	.7403	.4390	.1376	.8363	.5349	.9322	.3295	.7268	.1241	.5214
664	.6449	.3436	.0422	.7409	.4395	.1382	.8368	.5355	.9328	.3301	.7274	.1247	.5220
667	.6454	.3441	.0427	.7414	.4401	.1387	.8374	.5361	.9334	.3307	.7281	.1254	.5227
424670	69.6459	71.3446	73.0432	74.7419	76.4406	78.1393	79.8380	81.5366	84.9340	88.3314	91.7287	95.1261	98.5234
673	.6464	.3451	.0438	.7424	.4411	.1398	.8385	.5372	.9346	.3320	.7294	.1268	.5241
676	.6469	.3456	.0443	.7430	.4417	.1404	.8391	.5378	.9352	.3326	.7300	.1274	.5248
679	.6474	.3461	.0448	.7435	.4422	.1409	.8397	.5384	.9358	.3332	.7307	.1281	.5255
682	.6478	.3466	.0453	.7440	.4428	.1415	.8402	.5389	.9364	.3339	.7313	.1288	.5262
424685	69.6483	71.3471	73.0458	74.7446	76.4433	78.1420	79.8408	81.5395	84.9370	88.3345	91.7320	95.1294	98.5269
688	.6488	.3476	.0463	.7451	.4438	.1426	.8413	.5401	.9376	.3351	.7326	.1301	.5276
691	.6493	.3481	.0469	.7456	.4444	.1431	.8419	.5407	.9382	.3357	.7333	.1308	.5283
694	.6498	.3486	.0474	.7461	.4449	.1437	.8425	.5412	.9388	.3364	.7339	.1315	.5290
697	.6503	.3491	.0479	.7467	.4455	.1442	.8430	.5418	.9394	.3370	.7346	.1321	.5297
424700	69.6508	71.3496	73.0484	74.7472	76.4460	78.1448	79.8436	81.5424	84.9400	88.3376	91.7352	95.1328	98.5304

H A R M O N I C S

BASIC FREQ.	112	116	120	124	128	132	136	140	144	148	152	156	160
424700	47.5664	49.2652	50.9640	52.6628	54.3616	56.0604	57.7592	59.4580	61.1568	62.8556	64.5544	66.2532	67.9520
703	.5667	.2655	.9644	.6632	.3620	.0608	.7596	.4584	.1572	.8560	.5549	.2537	.9525
706	.5671	.2659	.9647	.6635	.3624	.0612	.7600	.4588	.1577	.8565	.5553	.2541	.9530
709	.5674	.2662	.9651	.6639	.3628	.0616	.7604	.4593	.1581	.8569	.5558	.2546	.9534
712	.5677	.2666	.9654	.6643	.3631	.0620	.7608	.4597	.1585	.8574	.5562	.2551	.9539
424715	47.5681	49.2669	50.9658	52.6647	54.3635	56.0624	57.7612	59.4601	61.1590	62.8578	64.5567	66.2555	67.9544
718	.5684	.2673	.9662	.6650	.3639	.0628	.7616	.4605	.1594	.8583	.5571	.2560	.9549
721	.5688	.2676	.9665	.6654	.3643	.0632	.7621	.4609	.1598	.8587	.5576	.2565	.9554
724	.5691	.2680	.9669	.6658	.3647	.0636	.7625	.4614	.1603	.8592	.5580	.2569	.9558
727	.5694	.2683	.9672	.6661	.3651	.0640	.7629	.4618	.1607	.8596	.5585	.2574	.9563
424730	47.5698	49.2687	50.9676	52.6665	54.3654	56.0644	57.7633	59.4622	61.1611	62.8600	64.5590	66.2579	67.9568
733	.5701	.2690	.9680	.6669	.3658	.0648	.7637	.4626	.1616	.8605	.5594	.2583	.9573
736	.5704	.2694	.9683	.6673	.3662	.0652	.7641	.4630	.1620	.8609	.5599	.2588	.9578
739	.5708	.2697	.9687	.6676	.3666	.0655	.7645	.4635	.1624	.8614	.5603	.2593	.9582
742	.5711	.2701	.9690	.6680	.3670	.0659	.7649	.4639	.1628	.8618	.5608	.2598	.9587
424745	47.5714	49.2704	50.9694	52.6684	54.3674	56.0663	57.7653	59.4643	61.1633	62.8623	64.5612	66.2602	67.9592
748	.5718	.2708	.9698	.6688	.3677	.0667	.7657	.4647	.1637	.8627	.5617	.2607	.9597
751	.5721	.2711	.9701	.6691	.3681	.0671	.7661	.4651	.1641	.8631	.5622	.2612	.9602
754	.5724	.2715	.9705	.6695	.3685	.0675	.7665	.4656	.1646	.8636	.5626	.2616	.9606
757	.5728	.2718	.9708	.6699	.3689	.0679	.7670	.4660	.1650	.8640	.5631	.2621	.9611
424760	47.5731	49.2722	50.9712	52.6702	54.3693	56.0683	57.7674	59.4664	61.1654	62.8645	64.5635	66.2626	67.9616
763	.5735	.2725	.9716	.6706	.3697	.0687	.7678	.4668	.1659	.8649	.5640	.2630	.9621
766	.5738	.2729	.9719	.6710	.3700	.0691	.7682	.4672	.1663	.8654	.5644	.2635	.9626
769	.5741	.2732	.9723	.6714	.3704	.0695	.7686	.4677	.1667	.8658	.5649	.2640	.9630
772	.5745	.2736	.9726	.6717	.3708	.0699	.7690	.4681	.1672	.8663	.5653	.2644	.9635
424775	47.5748	49.2739	50.9730	52.6721	54.3712	56.0703	57.7694	59.4685	61.1676	62.8667	64.5658	66.2649	67.9640
778	.5751	.2742	.9734	.6725	.3716	.0707	.7698	.4689	.1680	.8671	.5663	.2654	.9645
781	.5755	.2746	.9737	.6728	.3720	.0711	.7702	.4693	.1685	.8676	.5667	.2658	.9650
784	.5758	.2749	.9741	.6732	.3724	.0715	.7706	.4698	.1689	.8680	.5672	.2663	.9654
787	.5761	.2753	.9744	.6736	.3727	.0719	.7710	.4702	.1693	.8685	.5676	.2668	.9659
424790	47.5765	49.2756	50.9748	52.6740	54.3731	56.0723	57.7714	59.4706	61.1698	62.8689	64.5681	66.2672	67.9664
793	.5768	.2760	.9752	.6743	.3735	.0727	.7718	.4710	.1702	.8694	.5685	.2677	.9669
796	.5772	.2763	.9755	.6747	.3739	.0731	.7723	.4714	.1706	.8698	.5690	.2682	.9674
799	.5775	.2767	.9759	.6751	.3743	.0735	.7727	.4719	.1711	.8703	.5694	.2686	.9678
802	.5778	.2770	.9762	.6754	.3747	.0739	.7731	.4723	.1715	.8707	.5699	.2691	.9683
424805	47.5782	49.2774	50.9766	52.6758	54.3750	56.0743	57.7735	59.4727	61.1719	62.8711	64.5704	66.2696	67.9688
808	.5785	.2777	.9770	.6762	.3754	.0747	.7739	.4731	.1724	.8716	.5708	.2700	.9693
811	.5788	.2781	.9773	.6766	.3758	.0751	.7743	.4735	.1728	.8720	.5713	.2705	.9698
814	.5792	.2784	.9777	.6769	.3762	.0754	.7747	.4740	.1732	.8725	.5717	.2710	.9702
817	.5795	.2788	.9780	.6773	.3766	.0758	.7751	.4744	.1736	.8729	.5722	.2715	.9707
424820	47.5798	49.2791	50.9784	52.6777	54.3770	56.0762	57.7755	59.4748	61.1741	62.8734	64.5726	66.2719	67.9712
823	.5802	.2795	.9788	.6781	.3773	.0766	.7759	.4752	.1745	.8738	.5731	.2724	.9717
826	.5805	.2798	.9791	.6784	.3777	.0770	.7763	.4756	.1749	.8742	.5736	.2729	.9722
829	.5808	.2802	.9795	.6788	.3781	.0774	.7767	.4761	.1754	.8747	.5740	.2733	.9726
832	.5812	.2805	.9798	.6792	.3785	.0778	.7772	.4765	.1758	.8751	.5745	.2738	.9731
424835	47.5815	49.2809	50.9802	52.6795	54.3789	56.0782	57.7776	59.4769	61.1762	62.8756	64.5749	66.2743	67.9736
838	.5819	.2812	.9806	.6799	.3793	.0786	.7780	.4773	.1767	.8760	.5754	.2747	.9741
841	.5822	.2816	.9809	.6803	.3796	.0790	.7784	.4777	.1771	.8765	.5758	.2752	.9746
844	.5825	.2819	.9813	.6807	.3800	.0794	.7788	.4782	.1775	.8769	.5763	.2757	.9750
847	.5829	.2823	.9816	.6810	.3804	.0798	.7792	.4786	.1780	.8774	.5767	.2761	.9755
424850	47.5832	49.2826	50.9820	52.6814	54.3808	56.0802	57.7796	59.4790	61.1784	62.8778	64.5772	66.2766	67.9760
853	.5835	.2829	.9824	.6818	.3812	.0806	.7800	.4794	.1788	.8782	.5777	.2771	.9765
856	.5839	.2833	.9827	.6821	.3816	.0810	.7804	.4798	.1793	.8787	.5781	.2775	.9770
859	.5842	.2836	.9831	.6825	.3820	.0814	.7808	.4803	.1797	.8791	.5786	.2780	.9774
862	.5845	.2840	.9834	.6829	.3823	.0818	.7812	.4807	.1801	.8796	.5790	.2785	.9779
424865	47.5849	49.2843	50.9838	52.6833	54.3827	56.0822	57.7816	59.4811	61.1806	62.8800	64.5795	66.2789	67.9784
868	.5852	.2847	.9842	.6836	.3831	.0826	.7820	.4815	.1810	.8805	.5709	.2794	.9789
871	.5856	.2850	.9845	.6840	.3835	.0830	.7825	.4819	.1814	.8809	.5804	.2799	.9794
874	.5859	.2854	.9849	.6844	.3839	.0834	.7829	.4824	.1819	.8814	.5808	.2803	.9798
877	.5862	.2857	.9852	.6847	.3843	.0838	.7833	.4828	.1823	.8818	.5813	.2808	.9803
424880	47.5866	49.2861	50.9856	52.6851	54.3846	56.0842	57.7837	59.4832	61.1827	62.8822	64.5818	66.2813	67.9808
883	.5869	.2864	.9860	.6855	.3850	.0846	.7841	.4836	.1832	.8827	.5822	.2817	.9813
886	.5872	.2868	.9863	.6859	.3854	.0850	.7845	.4840	.1836	.8831	.5827	.2822	.9818
889	.5876	.2871	.9867	.6862	.3858	.0853	.7849	.4845	.1840	.8836	.5831	.2827	.9822
892	.5879	.2875	.9870	.6866	.3862	.0857	.7853	.4849	.1844	.8840	.5836	.2832	.9827
424895	47.5882	49.2878	50.9874	52.6870	54.3866	56.0861	57.7857	59.4853	61.1849	62.8845	64.5840	66.2836	67.9832
898	.5886	.2882	.9878	.6874	.3869	.0865	.7861	.4857	.1853	.8849	.5845	.2841	.9837
901	.5889	.2885	.9881	.6877	.3873	.0869	.7865	.4861	.1857	.8853	.5850	.2846	.9842
904	.5892	.2889	.9885	.6881	.3877	.0873	.7869	.4866	.1862	.8858	.5854	.2850	.9846
907	.5896	.2892	.9888	.6885	.3881	.0877	.7874	.4870	.1866	.8862	.5859	.2855	.9851
424910	47.5899	49.2896	50.9892	52.6888	54.3885	56.0881	57.7878	59.4874	61.1870	62.8867	64.5863	66.2860	67.9856
913	.5903	.2899	.9896	.6892	.3889	.0885	.7882	.4878	.1875	.8871	.5868	.2864	.9861
916	.5906	.2903	.9899	.6896	.3892	.0889	.7886	.4882	.1879	.8876	.5872	.2869	.9866
919	.5909	.2906	.9903	.6900	.3896	.0893	.7890	.4887	.1883	.8880	.5877	.2874	.9870
922	.5913	.2910	.9906	.6903	.3900	.0897	.7894	.4891	.1888	.8885	.5881	.2878	.9875
424925	47.5916	49.2913	50.9910	52.6907	54.3904	56.0901	57.7898	59.4895	61.1892	62.8889	64.5886	66.2883	67.9880
928	.5919	.2916	.9914	.6911	.3908	.0905	.7902	.4899	.1896	.8893	.5891	.2888	.9885
931	.5923	.2920	.9917	.6914	.3912	.0909	.7906	.4903	.1901	.8898	.5895	.2892	.9890
934	.5926	.2923	.9921	.6918	.3916	.0913	.7910	.4908	.1905	.8902	.5900	.2897	.9894
937	.5929	.2927	.9924	.6922	.3919	.0917	.7914	.4912	.1909	.8907	.5904	.2902	.9899
424940	47.5933	49.2930	50.9928	52.6926	54.3923	56.0921	57.7918	59.4916	61.1914	62.8911	64.5909	66.2906	67.9904
943	.5936	.2934	.9932	.6929	.3927	.0925	.7922	.4920	.1918	.8916	.5913	.2911	.9909
946	.5940	.2937	.9935	.6933	.3931	.0929	.7927	.4924	.1922	.8920	.5918	.2916	.9914
949	.5943	.2941	.9939	.6937	.3935	.0933	.7931	.4929	.1927	.8925	.5922	.2920	.9918
952	.5946	.2944	.9942	.6940	.3939	.0937	.7935	.4933	.1931	.8929	.5927	.2925	.9923
424955	47.5950	49.2948	50.9946	52.6944	54.3942	56.0941	57.7939	59.4937	61.1935	62.8933	64.5932	66.2930	67.9928
958	.5953	.2951	.9950	.6948	.3946	.0945	.7943	.4941	.1940	.8938	.5936	.2934	.9933
961	.5956	.2955	.9953	.6952	.3950	.0949	.7947	.4945	.1944	.8942	.5941	.2939	.9938
964	.5960	.2958	.9957	.6955	.3954	.0952	.7951	.4950	.1948	.8947	.5945	.2944	.9942
967	.5963	.2962	.9960	.6959	.3958	.0956	.7955	.4954	.1952	.8951	.5950	.2949	.9947
424970	47.5966	49.2965	50.9964	52.6963	54.3962	56.0960	57.7959	59.4958	61.1957	62.8956	64.5954	66.2953	67.9952
973	.5970	.2969	.9968	.6967	.3965	.0964	.7963	.4962	.1961	.8960	.5959	.2958	.9957
976	.5973	.2972	.9971	.6970	.3969	.0968	.7967	.4966	.1965	.8964	.5964	.2963	.9962
979	.5976	.2976	.9975	.6974	.3973	.0972	.7971	.4971	.1970	.8969	.5968	.2967	.9966
982	.5980	.2979	.9978	.6978	.3977	.0976	.7976	.4975	.1974	.8973	.5973	.2972	.9971
424985	47.5983	49.2983	50.9982	52.6981	54.3981	56.0980	57.7980	59.4979	61.1978	62.8978	64.5977	66.2977	67.9976
988	.5987	.2986	.9986	.6985	.3985	.0984	.7984	.4983	.1983	.8982	.5982	.2981	.9981
991	.5990	.2990	.9989	.6989	.3988	.0988	.7988	.4987	.1987	.8987	.5986	.2986	.9986
994	.5993	.2993	.9993	.6993	.3992	.0992	.7992	.4992	.1991	.8991	.5991	.2991	.9990
997	.5997	.2997	.9996	.6996	.3996	.0996	.7996	.4996	.1996	.8996	.5995	.2995	.9995
425000	47.6000	49.3000	51.0000	52.7000	54.4000	56.1000	57.8000	59.5000	61.2000	62.9000	64.6000	66.3000	68.0000

H A R M O N I C S

BASIC FREQ.	164	168	172	176	180	184	188	192	200	208	216	224	232
424700	69.6508	71.3496	73.0484	74.7472	76.4460	78.1448	79.8436	81.5424	84.9400	88.3376	91.7352	95.1328	98.5304
703	.6513	.3501	.0489	.7477	.4465	.1454	.8442	.5430	.9406	.3382	.7358	.1335	.5311
706	.6518	.3506	.0494	.7483	.4471	.1459	.8447	.5436	.9412	.3388	.7365	.1341	.5318
709	.6523	.3511	.0499	.7488	.4476	.1465	.8453	.5441	.9418	.3395	.7371	.1348	.5325
712	.6528	.3516	.0505	.7493	.4482	.1470	.8459	.5447	.9424	.3401	.7378	.1355	.5332
424715	69.6533	71.3521	73.0510	74.7498	76.4487	78.1476	79.8464	81.5453	84.9430	88.3407	91.7384	95.1362	98.5339
718	.6538	.3526	.0515	.7504	.4492	.1481	.8470	.5459	.9436	.3413	.7391	.1368	.5346
721	.6542	.3531	.0520	.7509	.4498	.1487	.8475	.5464	.9442	.3420	.7397	.1375	.5353
724	.6547	.3536	.0525	.7514	.4503	.1492	.8481	.5470	.9448	.3426	.7404	.1382	.5360
727	.6552	.3541	.0530	.7520	.4509	.1498	.8487	.5476	.9454	.3432	.7410	.1388	.5367
424730	69.6557	71.3546	73.0536	74.7525	76.4514	78.1503	79.8492	81.5482	84.9860	88.3438	91.7417	95.1395	98.5374
733	.6562	.3551	.0541	.7530	.4519	.1509	.8498	.5487	.9466	.3445	.7423	.1402	.5381
736	.6567	.3556	.0546	.7535	.4525	.1514	.8504	.5493	.9472	.3451	.7430	.1409	.5388
739	.6572	.3562	.0551	.7541	.4530	.1520	.8509	.5499	.9478	.3457	.7436	.1415	.5394
742	.6577	.3567	.0556	.7546	.4536	.1525	.8515	.5505	.9484	.3463	.7443	.1422	.5401
424745	69.6582	71.3572	73.0561	74.7551	76.4541	78.1531	79.8521	81.5510	84.9490	88.3470	91.7449	95.1429	98.5408
748	.6587	.3577	.0567	.7556	.4546	.1536	.8526	.5516	.9496	.3476	.7456	.1436	.5415
751	.6592	.3582	.0572	.7562	.4552	.1542	.8532	.5522	.9502	.3482	.7462	.1442	.5422
754	.6597	.3587	.0577	.7567	.4557	.1547	.8538	.5528	.9508	.3488	.7469	.1449	.5429
757	.6601	.3592	.0582	.7572	.4563	.1553	.8543	.5533	.9514	.3495	.7475	.1456	.5436
424760	69.6606	71.3597	73.0587	74.7578	76.4568	78.1558	79.8549	81.5539	84.9520	88.3501	91.7482	95.1462	98.5443
763	.6611	.3602	.0592	.7583	.4573	.1564	.8554	.5545	.9526	.3507	.7488	.1469	.5450
766	.6616	.3607	.0598	.7588	.4579	.1569	.8560	.5551	.9532	.3513	.7495	.1476	.5457
769	.6621	.3612	.0603	.7593	.4584	.1575	.8566	.5556	.9538	.3520	.7501	.1483	.5464
772	.6626	.3617	.0608	.7599	.4590	.1580	.8571	.5562	.9544	.3526	.7508	.1489	.5471
424775	69.6631	71.3622	73.0613	74.7604	76.4595	78.1586	79.8577	81.5568	84.9550	88.3532	91.7514	95.1496	98.5478
778	.6636	.3627	.0618	.7609	.4600	.1592	.8583	.5574	.9556	.3538	.7520	.1503	.5485
781	.6641	.3632	.0623	.7615	.4606	.1597	.8588	.5580	.9562	.3544	.7527	.1509	.5492
784	.6646	.3637	.0628	.7620	.4611	.1603	.8594	.5585	.9568	.3551	.7533	.1516	.5499
787	.6651	.3642	.0634	.7625	.4617	.1608	.8600	.5591	.9574	.3557	.7540	.1523	.5506
424790	69.6656	71.2647	73.0639	74.7630	76.4622	78.1614	79.8605	81.5597	84.9580	88.3563	91.7546	95.1530	98.5513
793	.6661	.3652	.0644	.7636	.4627	.1619	.8611	.5603	.9586	.3569	.7553	.1536	.5520
796	.6665	.3657	.0649	.7641	.4633	.1625	.8616	.5608	.9592	.3576	.7559	.1543	.5527
799	.6670	.3662	.0654	.7646	.4638	.1630	.8622	.5614	.9598	.3582	.7566	.1550	.5534
802	.6675	.3667	.0659	.7652	.4644	.1636	.8628	.5620	.9604	.3588	.7572	.1556	.5541
424805	69.6680	71.3672	73.0665	74.7657	76.4649	78.1641	79.8633	81.5626	84.9610	88.3594	91.7579	95.1563	98.5548
808	.6685	.3677	.0670	.7662	.4654	.1647	.8639	.5631	.9616	.3601	.7585	.1570	.5555
811	.6690	.3682	.0675	.7667	.4660	.1652	.8645	.5637	.9622	.3607	.7592	.1577	.5562
814	.6695	.3688	.0680	.7673	.4665	.1658	.8650	.5643	.9628	.3613	.7598	.1583	.5568
817	.6700	.3693	.0685	.7678	.4671	.1663	.8656	.5649	.9634	.3619	.7605	.1590	.5575
424820	69.6705	71.3698	73.0690	74.7683	76.4676	78.1669	79.8662	81.5654	84.9640	88.3626	91.7611	95.1597	98.5582
823	.6710	.3703	.0696	.7688	.4681	.1674	.8667	.5660	.9646	.3632	.7618	.1604	.5589
826	.6715	.3708	.0701	.7694	.4687	.1680	.8673	.5666	.9652	.3638	.7624	.1610	.5596
829	.6720	.3713	.0706	.7699	.4692	.1685	.8679	.5672	.9658	.3644	.7631	.1617	.5603
832	.6724	.3718	.0711	.7704	.4698	.1691	.8684	.5677	.9664	.3651	.7637	.1624	.5610
424835	69.6729	71.3723	73.0716	74.7710	76.4703	78.1696	79.8690	81.5683	84.9670	88.3657	91.7644	95.1630	98.5617
838	.6734	.3728	.0721	.7715	.4708	.1702	.8695	.5689	.9676	.3663	.7650	.1637	.5624
841	.6739	.3733	.0727	.7720	.4714	.1707	.8701	.5695	.9682	.3669	.7657	.1644	.5631
844	.6744	.3738	.0732	.7725	.4719	.1713	.8707	.5700	.9688	.3676	.7663	.1651	.5638
847	.6749	.3743	.0737	.7731	.4725	.1718	.8712	.5706	.9694	.3682	.7670	.1657	.5645
424850	69.6754	71.3748	73.0742	74.7736	76.4730	78.1724	79.8718	81.5712	84.9700	88.3688	91.7676	95.1664	98.5652
853	.6759	.3753	.0747	.7741	.4735	.1730	.8724	.5718	.9706	.3694	.7682	.1671	.5659
856	.6764	.3758	.0752	.7747	.4741	.1735	.8729	.5724	.9712	.3700	.7689	.1677	.5666
859	.6769	.3763	.0757	.7752	.4746	.1741	.8735	.5729	.9718	.3707	.7695	.1684	.5673
862	.6774	.3768	.0763	.7757	.4752	.1746	.8741	.5735	.9724	.3713	.7702	.1691	.5680
424865	69.6779	71.3773	73.0768	74.7762	76.4757	78.1752	79.8746	81.5741	84.9730	88.3719	91.7708	95.1698	98.5687
868	.6784	.3778	.0773	.7768	.4762	.1757	.8752	.5747	.9736	.3725	.7715	.1704	.5694
871	.6788	.3783	.0778	.7773	.4768	.1763	.8757	.5752	.9742	.3732	.7721	.1711	.5701
874	.6793	.3788	.0783	.7778	.4773	.1768	.8763	.5758	.9748	.3738	.7728	.1718	.5708
877	.6798	.3793	.0788	.7784	.4779	.1774	.8769	.5764	.9754	.3744	.7734	.1724	.5715
424880	69.6803	71.3798	73.0794	74.7789	76.4784	78.1779	79.8774	81.5770	84.9760	88.3750	91.7741	95.1731	98.5722
883	.6808	.3803	.0799	.7794	.4789	.1785	.8780	.5775	.9766	.3757	.7747	.1738	.5729
886	.6813	.3808	.0804	.7799	.4795	.1790	.8786	.5781	.9772	.3763	.7754	.1745	.5736
889	.6818	.3814	.0809	.7805	.4800	.1796	.8791	.5787	.9778	.3769	.7760	.1751	.5742
892	.6823	.3819	.0814	.7810	.4806	.1801	.8797	.5793	.9784	.3775	.7767	.1758	.5749
424895	69.6828	71.3824	73.0819	74.7815	76.4811	78.1807	79.8803	81.5798	84.9790	88.3782	91.7773	95.1765	98.5756
898	.6833	.3829	.0825	.7820	.4816	.1812	.8808	.5804	.9796	.3788	.7780	.1772	.5763
901	.6838	.3834	.0830	.7826	.4822	.1818	.8814	.5810	.9802	.3794	.7786	.1778	.5770
904	.6843	.3839	.0835	.7831	.4827	.1823	.8820	.5816	.9808	.3800	.7793	.1785	.5777
907	.6847	.3844	.0840	.7836	.4833	.1829	.8825	.5821	.9814	.3807	.7799	.1792	.5784
424910	69.6852	71.3849	73.0845	74.7842	76.4838	78.1834	79.8831	81.5827	84.9820	88.3813	91.7806	95.1798	98.5791
913	.6857	.3854	.0850	.7847	.4843	.1840	.8836	.5833	.9826	.3819	.7812	.1805	.5798
916	.6862	.3859	.0856	.7852	.4849	.1845	.8842	.5839	.9832	.3825	.7819	.1812	.5805
919	.6867	.3864	.0861	.7857	.4854	.1851	.8848	.5844	.9838	.3832	.7825	.1819	.5812
922	.6872	.3869	.0866	.7863	.4860	.1856	.8853	.5850	.9844	.3838	.7832	.1825	.5819
424925	69.6877	71.3874	73.0871	74.7868	76.4865	78.1862	79.8859	81.5856	84.9850	88.3844	91.7838	95.1832	98.5826
928	.6882	.3879	.0876	.7873	.4870	.1868	.8865	.5862	.9856	.3850	.7844	.1839	.5833
931	.6887	.3884	.0881	.7879	.4876	.1873	.8870	.5868	.9862	.3856	.7851	.1845	.5840
934	.6892	.3889	.0886	.7884	.4881	.1879	.8876	.5873	.9868	.3863	.7857	.1852	.5847
937	.6897	.3894	.0892	.7889	.4887	.1884	.8882	.5879	.9874	.3869	.7864	.1859	.5854
424940	69.6902	71.3899	73.0897	74.7894	86.4892	78.1890	79.8887	81.5885	84.9880	88.3875	91.7870	95.1866	98.5861
943	.6907	.3904	.0902	.7900	.4897	.1895	.8893	.5891	.9886	.3881	.7877	.1872	.5868
946	.6911	.3909	.0907	.7905	.4903	.1901	.8898	.5896	.9892	.3888	.7883	.1879	.5875
949	.6916	.3914	.0912	.7910	.4908	.1906	.8904	.5902	.9898	.3894	.7890	.1886	.5882
952	.6921	.3919	.0917	.7916	.4914	.1912	.8910	.5908	.9904	.3900	.7896	.1892	.5889
424955	69.6926	71.3924	73.0923	74.7921	76.4919	78.1917	79.8915	81.5914	84.9910	88.3906	91.7903	95.1899	98.5896
958	.6931	.3929	.0928	.7926	.4924	.1923	.8921	.5919	.9916	.3913	.7909	.1906	.5903
961	.6936	.3934	.0933	.7931	.4930	.1928	.8927	.5925	.9922	.3919	.7916	.1913	.5910
964	.6941	.3940	.0938	.7937	.4935	.1934	.8932	.5931	.9928	.3925	.7922	.1919	.5916
967	.6946	.3945	.0943	.7942	.4941	.1939	.8938	.5937	.9934	.3931	.7929	.1926	.5923
424970	69.6951	71.3950	73.0948	74.7947	76.4946	78.1945	79.8944	81.5942	84.9940	88.3938	91.7935	95.1933	98.5930
973	.6956	.3955	.0954	.7952	.4951	.1950	.8949	.5948	.9946	.3944	.7942	.1940	.5937
976	.6961	.3960	.0959	.7958	.4957	.1956	.8955	.5954	.9952	.3950	.7948	.1946	.5944
979	.6966	.3965	.0964	.7963	.4962	.1961	.8961	.5960	.9958	.3956	.7955	.1953	.5951
982	.6970	.3970	.0969	.7968	.4968	.1967	.8966	.5965	.9964	.3963	.7961	.1960	.5958
424985	69.6975	71.3975	73.0974	74.7974	76.4973	78.1972	79.8972	81.5971	84.9970	88.3969	91.7968	95.1966	98.5965
988	.6980	.3980	.0979	.7979	.4978	.1978	.8977	.5977	.9976	.3975	.7974	.1973	.5972
991	.6985	.3985	.0985	.7984	.4984	.1983	.8983	.5983	.9982	.3981	.7981	.1980	.5979
994	.6990	.3990	.0990	.7989	.4989	.1989	.8989	.5988	.9988	.3988	.7987	.1987	.5986
997	.6995	.3995	.0995	.7995	.4995	.1994	.8994	.5994	.9994	.3994	.7994	.1993	.5993
425000	69.7000	71.4000	73.1000	74.8000	76.5000	78.2000	79.9000	81.6000	85.0000	88.4000	91.8000	95.2000	98.6000

H A R M O N I C S

BASIC FREQ.	112	116	120	124	128	132	136	140	144	148	152	156	160
425000	47.6000	49.3000	51.0000	52.7000	54.4000	56.1000	57.8000	59.5000	61.2000	62.9000	64.6000	66.3000	68.0000
003	.6003	.3003	.0004	.7004	.4004	.1004	.8004	.5004	.2004	.9004	.6005	.3005	.0005
006	.6007	.3007	.0007	.7007	.4008	.1008	.8008	.5008	.2009	.9009	.6009	.3009	.0010
009	.6010	.3010	.0011	.7011	.4012	.1012	.8012	.5013	.2013	.9013	.6014	.3014	.0014
012	.6013	.3014	.0014	.7015	.4015	.1016	.8016	.5017	.2017	.9018	.6018	.3019	.0019
425015	47.6017	49.3017	51.0018	52.7019	54.4019	56.1020	57.8020	59.5021	61.2022	62.9022	64.6023	66.3023	68.0024
018	.6020	.3021	.0022	.7022	.4023	.1024	.8024	.5025	.2026	.9027	.6027	.3028	.0029
021	.6024	.3024	.0025	.7026	.4027	.1028	.8029	.5029	.2030	.9031	.6032	.3033	.0034
024	.6027	.3028	.0029	.7030	.4031	.1032	.8033	.5034	.2035	.9036	.6036	.3037	.0038
027	.6030	.3031	.0032	.7033	.4035	.1036	.8037	.5038	.2039	.9040	.6041	.3042	.0043
425030	47.6034	49.3035	51.0036	52.7037	54.4038	56.1040	57.8041	59.5042	61.2043	62.9044	64.6046	66.3047	68.0048
033	.6037	.3038	.0040	.7041	.4042	.1044	.8045	.5046	.2048	.9049	.6050	.3051	.0053
036	.6040	.3042	.0043	.7045	.4046	.1048	.8049	.5050	.2052	.9053	.6055	.3056	.0058
039	.6044	.3045	.0047	.7048	.4050	.1051	.8053	.5055	.2056	.9058	.6059	.3061	.0062
042	.6047	.3049	.0050	.7052	.4054	.1055	.8057	.5059	.2060	.9062	.6064	.3066	.0067
425045	47.6050	49.3052	51.0054	52.7056	54.4058	56.1059	57.8061	59.5063	61.2065	62.9067	64.6068	66.3070	68.0072
048	.6054	.3056	.0058	.7060	.4061	.1063	.8065	.5067	.2069	.9071	.6073	.3075	.0077
051	.6057	.3059	.0061	.7063	.4065	.1067	.8069	.5071	.2073	.9075	.6078	.3080	.0082
054	.6060	.3063	.0065	.7067	.4069	.1071	.8073	.5076	.2078	.9080	.6082	.3084	.0086
057	.6064	.3066	.0068	.7071	.4073	.1075	.8078	.5080	.2082	.9084	.6087	.3089	.0091
425060	47.6067	49.3070	51.0072	52.7074	54.4077	56.1079	57.8082	59.5084	61.2086	62.9089	64.6091	66.3094	68.0096
063	.6071	.3073	.0076	.7078	.4081	.1083	.8086	.5088	.2091	.9093	.6096	.3098	.0101
066	.6074	.3077	.0079	.7082	.4084	.1087	.8090	.5092	.2095	.9098	.6100	.3103	.0106
069	.6077	.3080	.0083	.7086	.4088	.1091	.8094	.5097	.2099	.9102	.6105	.3108	.0110
072	.6081	.3084	.0086	.7089	.4092	.1095	.8098	.5101	.2104	.9107	.6109	.3112	.0115
425075	47.6084	49.3087	51.0090	52.7093	54.4096	56.1099	57.8102	59.5105	61.2108	62.9111	64.6114	66.3117	68.0120
078	.6087	.3090	.0094	.7097	.4100	.1103	.8106	.5109	.2112	.9115	.6119	.3122	.0125
081	.6091	.3094	.0097	.7100	.4104	.1107	.8110	.5113	.2117	.9120	.6123	.3126	.0130
084	.6094	.3097	.0101	.7104	.4108	.1111	.8114	.5118	.2121	.9124	.6128	.3131	.0134
087	.6097	.3101	.0104	.7108	.4111	.1115	.8118	.5122	.2125	.9129	.6132	.3136	.0139
425090	47.6101	49.3104	51.0108	52.7112	54.4115	56.1119	57.8122	59.5126	61.2130	62.9133	64.6137	66.3140	68.0144
093	.6104	.3108	.0112	.7115	.4119	.1123	.8126	.5130	.2134	.9138	.6141	.3145	.0149
096	.6108	.3111	.0115	.7119	.4123	.1127	.8131	.5134	.2138	.9142	.6146	.3150	.0154
099	.6111	.3115	.0119	.7123	.4127	.1131	.8135	.5139	.2143	.9147	.6150	.3154	.0158
102	.6114	.3118	.0122	.7126	.4131	.1135	.8139	.5143	.2147	.9151	.6155	.3159	.0163
425105	47.6118	49.3122	51.0126	52.7130	54.4134	56.1139	57.8143	59.5147	61.2151	62.9155	64.6160	66.3164	68.0168
108	.6121	.3125	.0130	.7134	.4138	.1143	.8147	.5151	.2156	.9160	.6164	.3168	.0173
111	.6124	.3129	.0133	.7138	.4142	.1147	.8151	.5155	.2160	.9164	.6169	.3173	.0178
114	.6128	.3132	.0137	.7141	.4146	.1150	.8155	.5160	.2164	.9169	.6173	.3178	.0182
117	.6131	.3136	.0140	.7145	.4150	.1154	.8159	.5164	.2168	.9173	.6178	.3183	.0187
425120	47.6134	49.3139	51.0144	52.7149	54.4154	56.1158	57.8163	59.5168	61.2173	62.9178	64.6182	66.3187	68.0192
123	.6138	.3143	.0148	.7153	.4157	.1162	.8167	.5172	.2177	.9182	.6187	.3192	.0197
126	.6141	.3146	.0151	.7156	.4161	.1166	.8171	.5176	.2181	.9186	.6192	.3197	.0202
129	.6144	.3150	.0155	.7160	.4165	.1170	.8175	.5181	.2186	.9191	.6196	.3201	.0206
132	.6148	.3153	.0158	.7164	.4169	.1174	.8180	.5185	.2190	.9195	.6201	.3206	.0211
425135	47.6151	49.3157	51.0162	52.7167	54.4173	56.1178	57.8184	59.5189	61.2194	62.9200	64.6205	66.3211	68.0216
138	.6155	.3160	.0166	.7171	.4177	.1182	.8188	.5193	.2199	.9204	.6210	.3215	.0221
141	.6158	.3164	.0169	.7175	.4180	.1186	.8192	.5197	.2203	.9209	.6214	.3220	.0226
144	.6161	.3167	.0173	.7179	.4184	.1190	.8196	.5202	.2207	.9213	.6219	.3225	.0230
147	.6165	.3171	.0176	.7182	.4188	.1194	.8200	.5206	.2212	.9218	.6223	.3229	.0235
425150	47.6168	49.3174	51.0180	52.7186	54.4192	56.1198	57.8204	59.5210	61.2216	62.9222	64.6228	66.3234	68.0240
153	.6171	.3177	.0184	.7190	.4196	.1202	.8208	.5214	.2220	.9226	.6233	.3239	.0245
156	.6175	.3181	.0187	.7193	.4200	.1206	.8212	.5218	.2225	.9231	.6237	.3243	.0250
159	.6178	.3184	.0191	.7197	.4204	.1210	.8216	.5223	.2229	.9235	.6242	.3248	.0254
162	.6181	.3188	.0194	.7201	.4207	.1214	.8220	.5227	.2233	.9240	.6246	.3253	.0259
425165	47.6185	49.3191	51.0198	52.7205	54.4211	56.1218	57.8224	59.5231	61.2238	62.9244	64.6251	66.3257	68.0264
168	.6188	.3195	.0202	.7208	.4215	.1222	.8228	.5235	.2242	.9249	.6255	.3262	.0269
171	.6192	.3198	.0205	.7212	.4219	.1226	.8233	.5239	.2246	.9253	.6260	.3267	.0274
174	.6195	.3202	.0209	.7216	.4223	.1230	.8237	.5244	.2251	.9258	.6264	.3271	.0278
177	.6198	.3205	.0212	.7219	.4227	.1234	.8241	.5248	.2255	.9262	.6269	.3276	.0283
425180	47.6202	49.3209	51.0216	52.7223	54.4230	56.1238	57.8245	59.5252	61.2259	62.9266	64.6274	66.3281	68.0288
183	.6205	.3212	.0220	.7227	.4234	.1242	.8249	.5256	.2264	.9271	.6278	.3285	.0293
186	.6208	.3216	.0223	.7231	.4238	.1246	.8253	.5260	.2268	.9275	.6283	.3290	.0298
189	.6212	.3219	.0227	.7234	.4242	.1249	.8257	.5265	.2272	.9280	.6287	.3295	.0302
192	.6215	.3223	.0230	.7238	.4246	.1253	.8261	.5269	.2276	.9284	.6292	.3300	.0307
425195	47.6218	49.3226	51.0234	52.7242	54.4250	56.1257	57.8265	59.5273	61.2281	62.9289	64.6296	66.3304	68.0312
198	.6222	.3230	.0238	.7246	.4253	.1261	.8269	.5277	.2285	.9293	.6301	.3309	.0317
201	.6225	.3233	.0241	.7249	.4257	.1265	.8273	.5281	.2289	.9297	.6306	.3314	.0322
204	.6228	.3237	.0245	.7253	.4261	.1269	.8277	.5286	.2294	.9302	.6310	.3318	.0326
207	.6232	.3240	.0248	.7257	.4265	.1273	.8282	.5290	.2298	.9306	.6315	.3323	.0331
425210	47.6235	49.3244	51.0252	52.7260	54.4269	56.1277	57.8286	59.5294	61.2302	62.9311	64.6319	66.3328	68.0336
213	.6239	.3247	.0256	.7264	.4273	.1281	.8290	.5298	.2307	.9315	.6324	.3332	.0341
216	.6242	.3251	.0259	.7268	.4276	.1285	.8294	.5302	.2311	.9320	.6328	.3337	.0346
219	.6245	.3254	.0263	.7272	.4280	.1289	.8298	.5307	.2315	.9324	.6333	.3342	.0350
222	.6249	.3258	.0266	.7275	.4284	.1293	.8302	.5311	.2320	.9329	.6337	.3346	.0355
425225	47.6252	49.3261	51.0270	52.7279	54.4288	56.1297	57.8306	59.5315	61.2324	62.9333	64.6342	66.3351	68.0360
228	.6255	.3264	.0274	.7283	.4292	.1301	.8310	.5319	.2328	.9337	.6347	.3356	.0365
231	.6259	.3268	.0277	.7286	.4296	.1305	.8314	.5323	.2333	.9342	.6351	.3360	.0370
234	.6262	.3271	.0281	.7290	.4300	.1309	.8318	.5328	.2337	.9346	.6356	.3365	.0374
237	.6265	.3275	.0284	.7294	.4303	.1313	.8322	.5332	.2341	.9351	.6360	.3370	.0379
425240	47.6269	49.3278	51.0288	52.7298	54.4307	56.1317	57.8326	59.5336	61.2346	62.9355	64.6365	66.3374	68.0384
243	.6272	.3282	.0292	.7301	.4311	.1321	.8330	.5340	.2350	.9360	.6369	.3379	.0389
246	.6276	.3285	.0295	.7305	.4315	.1325	.8335	.5344	.2354	.9364	.6374	.3384	.0394
249	.6279	.3289	.0299	.7309	.4319	.1329	.8339	.5349	.2359	.9369	.6378	.3388	.0398
252	.6282	.3292	.0302	.7312	.4323	.1333	.8343	.5353	.2363	.9373	.6383	.3393	.0403
425255	47.6286	49.3296	51.0306	52.7316	54.4326	56.1337	57.8347	59.5357	61.2367	62.9377	64.6388	66.3398	68.0408
258	.6289	.3299	.0310	.7320	.4330	.1341	.8351	.5361	.2372	.9382	.6392	.3402	.0413
261	.6292	.3303	.0313	.7324	.4334	.1345	.8355	.5365	.2376	.9386	.6397	.3407	.0418
264	.6296	.3306	.0317	.7327	.4338	.1348	.8359	.5370	.2380	.9391	.6401	.3412	.0422
267	.6299	.3310	.0320	.7331	.4342	.1352	.8363	.5374	.2384	.9395	.6406	.3417	.0427
425270	47.6302	49.3313	51.0324	52.7335	54.4346	56.1356	57.8367	59.5378	61.2389	62.9400	64.6410	66.3421	68.0432
273	.6306	.3317	.0328	.7339	.4349	.1360	.8371	.5382	.2393	.9404	.6415	.3426	.0437
276	.6309	.3320	.0331	.7342	.4353	.1364	.8375	.5386	.2397	.9408	.6420	.3431	.0442
279	.6312	.3324	.0335	.7346	.4357	.1368	.8379	.5391	.2402	.9413	.6424	.3435	.0446
282	.6316	.3327	.0338	.7350	.4361	.1372	.8384	.5395	.2406	.9417	.6429	.3440	.0451
425285	47.6319	49.3331	51.0342	52.7353	54.4365	56.1376	57.8388	59.5399	61.2410	62.9422	64.6433	66.3445	68.0456
288	.6323	.3334	.0346	.7357	.4369	.1380	.8392	.5403	.2415	.9426	.6438	.3449	.0461
291	.6326	.3338	.0349	.7361	.4372	.1384	.8396	.5407	.2419	.9431	.6442	.3454	.0466
294	.6329	.3341	.0353	.7365	.4376	.1388	.8400	.5412	.2423	.9435	.6447	.3459	.0470
297	.6333	.3345	.0356	.7368	.4380	.1392	.8404	.5416	.2428	.9440	.6451	.3463	.0475
425300	47.6336	49.3348	51.0360	52.7372	54.4384	56.1396	57.8408	59.5420	61.2432	62.9444	64.6456	66.3468	68.0480

MEGACYCLES PER SECOND

H A R M O N I C S

BASIC FREQ.	164	168	172	176	180	184	188	192	200	208	216	224	232
425000	69.7000	71.4000	73.1000	74.8000	76.5000	78.2000	79.9000	81.6000	85.0000	88.4000	91.8000	95.2000	98.6000
003	.7005	.4005	.1005	.8005	.5005	.2006	.9006	.6006	.0006	.4006	.8006	.2007	.6007
006	.7010	.4010	.1010	.8011	.5011	.2011	.9011	.6012	.0012	.4012	.8013	.2013	.6014
009	.7015	.4015	.1015	.8016	.5016	.2017	.9017	.6017	.0018	.4019	.8019	.2020	.6021
012	.7020	.4020	.1021	.8021	.5022	.2022	.9023	.6023	.0024	.4025	.8026	.2027	.6028
425015	69.7025	71.4025	73.1026	74.8027	76.5027	78.2028	79.9028	81.6029	85.0030	88.4031	91.8032	95.2034	98.6035
018	.7030	.4030	.1031	.8032	.5032	.2033	.9034	.6035	.0036	.4027	.8039	.2040	.6042
021	.7034	.4035	.1036	.8037	.5038	.2039	.9039	.6040	.0042	.4044	.8045	.2047	.6049
024	.7039	.4040	.1041	.8042	.5043	.2044	.9045	.6046	.0048	.4050	.8052	.2054	.6056
027	.7044	.4045	.1046	.8048	.5049	.2050	.9051	.6052	.0054	.4056	.8058	.2060	.6063
425030	69.7049	71.4050	73.1052	74.8053	76.5054	78.2055	79.9056	81.6058	85.0060	88.4062	91.8065	95.2067	98.6070
033	.7054	.4055	.1057	.8058	.5059	.2061	.9062	.6063	.0066	.4069	.8071	.2074	.6077
036	.7059	.4060	.1062	.8063	.5065	.2066	.9068	.6069	.0072	.4075	.8078	.2081	.6084
039	.7064	.4066	.1067	.8069	.5070	.2072	.9073	.6075	.0078	.4081	.8084	.2087	.6090
042	.7069	.4071	.1072	.8074	.5076	.2077	.9079	.6081	.0084	.4087	.8091	.2094	.6097
425045	69.7074	71.4076	73.1077	74.8079	76.5081	78.2083	79.9085	81.6086	85.0090	88.4094	91.8097	95.2101	98.6104
048	.7079	.4081	.1083	.8084	.5086	.2088	.9090	.6092	.0096	.4100	.8104	.2108	.6111
051	.7084	.4086	.1088	.8090	.5092	.2094	.9096	.6098	.0102	.4106	.8110	.2114	.6118
054	.7089	.4091	.1093	.8095	.5097	.2099	.9102	.6104	.0108	.4112	.8117	.2121	.6125
057	.7093	.4096	.1098	.8100	.5103	.2105	.9107	.6109	.0114	.4119	.8123	.2128	.6132
425060	69.7098	71.4101	73.1103	74.8106	76.5108	78.2110	79.9113	81.6115	85.0120	88.4125	91.8130	95.2134	98.6139
063	.7103	.4106	.1108	.8111	.5113	.2116	.9118	.6121	.0126	.4131	.8136	.2141	.6146
066	.7108	.4111	.1114	.8116	.5119	.2121	.9124	.6127	.0132	.4137	.8143	.2148	.6153
069	.7113	.4116	.1119	.8121	.5124	.2127	.9130	.6132	.0138	.4144	.8149	.2155	.6160
072	.7118	.4121	.1124	.8127	.5130	.2132	.9135	.6138	.0144	.4150	.8156	.2161	.6167
425075	69.7123	71.4126	73.1129	74.8132	76.5135	78.2138	79.9141	81.6144	85.0150	88.4156	91.8162	95.2168	98.6174
078	.7128	.4131	.1134	.8137	.5140	.2144	.9147	.6150	.0156	.4162	.8168	.2175	.6181
081	.7133	.4136	.1139	.8143	.5146	.2149	.9152	.6156	.0162	.4168	.8175	.2181	.6188
084	.7138	.4141	.1144	.8148	.5151	.2155	.9158	.6161	.0168	.4175	.8181	.2188	.6195
087	.7143	.4146	.1150	.8153	.5157	.2160	.9164	.6167	.0174	.4181	.8188	.2195	.6202
425090	69.7148	71.4151	73.1155	74.8158	76.5162	78.2166	79.9169	81.6173	85.0180	88.4187	91.8194	95.2202	98.6209
093	.7153	.4156	.1160	.8164	.5167	.2171	.9175	.6179	.0186	.4193	.8201	.2208	.6216
096	.7157	.4161	.1165	.8169	.5173	.2177	.9180	.6184	.0192	.4200	.8207	.2215	.6223
099	.7162	.4166	.1170	.8174	.5178	.2182	.9186	.6190	.0198	.4206	.8214	.2222	.6230
102	.7167	.4171	.1175	.8180	.5184	.2188	.9192	.6196	.0204	.4212	.8220	.2228	.6237
425105	69.7172	71.4176	73.1181	74.8185	76.5189	78.2193	79.9197	81.6202	85.0210	88.4218	91.8227	95.2235	98.6244
108	.7177	.4181	.1186	.8190	.5194	.2199	.9203	.6207	.0216	.4225	.8233	.2242	.6251
111	.7182	.4186	.1191	.8195	.5200	.2204	.9209	.6213	.0222	.4231	.8240	.2249	.6258
114	.7187	.4192	.1196	.8201	.5205	.2210	.9214	.6219	.0228	.4237	.8346	.2255	.6264
117	.7192	.4197	.1201	.8206	.5211	.2215	.9220	.6225	.0234	.4243	.8253	.2262	.6271
425120	69.7197	71.4202	73.1206	74.8211	76.5216	78.2221	79.9226	81.6230	85.0240	88.4250	91.8259	95.2269	98.6278
123	.7202	.4207	.1212	.8216	.5221	.2226	.9231	.6236	.0246	.4256	.8266	.2276	.6285
126	.7207	.4212	.1217	.8222	.5227	.2232	.9237	.6242	.0252	.4262	.8272	.2282	.6292
129	.7212	.4217	.1222	.8227	.5232	.2237	.9243	.6248	.0258	.4269	.8279	.2289	.6299
132	.7216	.4222	.1227	.8232	.5238	.2243	.9248	.6253	.0264	.4275	.8285	.2296	.6306
425135	69.7221	71.4227	73.1232	74.8238	76.5243	78.2248	79.9254	81.6259	85.0270	88.4281	91.8292	95.2302	98.6313
138	.7226	.4232	.1237	.8243	.5248	.2254	.9259	.6265	.0276	.4287	.8298	.2309	.6320
141	.7231	.4237	.1243	.8248	.5254	.2259	.9265	.6271	.0282	.4293	.8305	.2316	.6327
144	.7236	.4242	.1248	.8253	.5259	.2265	.9271	.6276	.0288	.4300	.8311	.2323	.6334
147	.7241	.4247	.1253	.8259	.5265	.2270	.9276	.6282	.0294	.4306	.8318	.2329	.6341
425150	69.7246	71.4252	73.1258	74.8264	76.5270	78.2276	79.9282	81.6288	85.0300	88.4312	91.8324	95.2336	98.6348
153	.7251	.4257	.1263	.8269	.5275	.2282	.9288	.6294	.0306	.4318	.8330	.2343	.6355
156	.7256	.4262	.1268	.8275	.5281	.2287	.9293	.6300	.0312	.4324	.8337	.2349	.6362
159	.7261	.4267	.1273	.8280	.5286	.2293	.9299	.6305	.0318	.4331	.8343	.2356	.6369
162	.7266	.4272	.1279	.8285	.5292	.2298	.9305	.6311	.0324	.4337	.8350	.2363	.6376
425165	69.7271	71.4277	73.1284	74.8290	76.5297	78.2304	79.9310	81.6317	85.0330	88.4343	91.8356	95.2370	98.6383
168	.7276	.4282	.1289	.8296	.5302	.2309	.9316	.6323	.0336	.4349	.8363	.2376	.6390
171	.7280	.4287	.1294	.8301	.5308	.2315	.9321	.6328	.0342	.4356	.8369	.2383	.6397
174	.7285	.4292	.1299	.8306	.5313	.2320	.9327	.6334	.0348	.4362	.8376	.2390	.6404
177	.7290	.4297	.1304	.8312	.5319	.2326	.9333	.6340	.0354	.4368	.8382	.2396	.6411
425180	69.7295	71.4302	73.1310	74.8317	76.5324	78.2331	79.9338	81.6346	85.0360	88.4374	91.8389	95.2403	98.6418
183	.7300	.4307	.1315	.8322	.5329	.2337	.9344	.6351	.0366	.4381	.8395	.2410	.6425
186	.7305	.4312	.1320	.8327	.5335	.2342	.9350	.6357	.0372	.4387	.8402	.2417	.6432
189	.7310	.4318	.1325	.8333	.5340	.2348	.9355	.6363	.0378	.4393	.8408	.2423	.6438
192	.7315	.4323	.1330	.8338	.5346	.2353	.9361	.6369	.0384	.4399	.8415	.2430	.6445
425195	69.7320	71.4328	73.1335	74.8343	76.5351	78.2359	79.9367	81.6374	85.0390	88.4406	91.8421	95.2437	98.6452
198	.7325	.4333	.1341	.8348	.5356	.2364	.9372	.6380	.0396	.4412	.8428	.2444	.6459
201	.7330	.4338	.1346	.8354	.5362	.2370	.9378	.6386	.0402	.4418	.8434	.2450	.6466
204	.7335	.4343	.1351	.8359	.5367	.2375	.9384	.6392	.0408	.4424	.8441	.2457	.6473
207	.7339	.4348	.1356	.8364	.5373	.2381	.9389	.6397	.0414	.4431	.8447	.2464	.6480
425210	69.7344	71.4353	73.1361	74.8370	76.5378	78.2386	79.9395	81.6403	85.0420	88.4437	91.8454	95.2470	98.6487
213	.7349	.4358	.1366	.8375	.5383	.2392	.9400	.6409	.0426	.4443	.8460	.2477	.6494
216	.7354	.4363	.1372	.8380	.5389	.2397	.9406	.6415	.0432	.4449	.8467	.2484	.6501
219	.7359	.4368	.1377	.8385	.5394	.2403	.9412	.6420	.0438	.4456	.8473	.2491	.6508
222	.7364	.4373	.1382	.8391	.5400	.2408	.9417	.6426	.0444	.4462	.8480	.2497	.6515
425225	69.7369	71.4378	73.1387	74.8396	76.5405	78.2414	79.9423	81.6432	85.0450	88.4468	91.8486	95.2504	98.6522
228	.7374	.4383	.1392	.8401	.5410	.2420	.9429	.6438	.0456	.4474	.8492	.2511	.6529
231	.7379	.4388	.1397	.8407	.5416	.2425	.9434	.6444	.0462	.4480	.8499	.2517	.6536
234	.7384	.4393	.1402	.8412	.5421	.2431	.9440	.6449	.0468	.4487	.8505	.2524	.6543
237	.7389	.4398	.1408	.8417	.5427	.2436	.9446	.6455	.0474	.4493	.8512	.2531	.6550
425240	69.7394	71.4403	73.1413	74.8422	76.5432	78.2442	79.9451	81.6461	85.0480	88.4499	91.8508	95.2538	98.6557
243	.7399	.4408	.1418	.8428	.5437	.2447	.9457	.6467	.0486	.4505	.8525	.2544	.6564
246	.7403	.4413	.1423	.8433	.5443	.2453	.9462	.6472	.0492	.4512	.8531	.2551	.6571
249	.7408	.4418	.1428	.8438	.5448	.2458	.9468	.6478	.0498	.4518	.8538	.2558	.6578
252	.7413	.4423	.1433	.8444	.5454	.2464	.9474	.6484	.0504	.4524	.8544	.2564	.6585
425255	69.7418	71.4428	73.1439	74.8449	76.5459	78.2469	79.9479	81.6490	85.0510	88.4530	91.8551	95.2571	98.6592
258	.7423	.4433	.1444	.8454	.5464	.2475	.9485	.6495	.0516	.4537	.8557	.2578	.6599
261	.7428	.4438	.1449	.8459	.5470	.2480	.9491	.6501	.0522	.4543	.8564	.2585	.6606
264	.7433	.4444	.1454	.8465	.5475	.2486	.9496	.6507	.0528	.4549	.8570	.2591	.6612
267	.7438	.4449	.1459	.8470	.5481	.2491	.9502	.6513	.0534	.4555	.8577	.2598	.6619
425270	69.7443	71.4454	73.1464	74.8475	76.5486	78.2497	79.9508	81.6518	85.0540	88.4562	91.8583	95.2605	98.6626
273	.7448	.4459	.1470	.8480	.5491	.2502	.9513	.6524	.0546	.4568	.8590	.2612	.6633
276	.7453	.4464	.1475	.8486	.5497	.2508	.9519	.6530	.0552	.4574	.8596	.2618	.6640
279	.7458	.4469	.1480	.8491	.5502	.2513	.9525	.6536	.0558	.4580	.8603	.2625	.6647
282	.7462	.4474	.1485	.8496	.5508	.2519	.9530	.6541	.0564	.4587	.8609	.2632	.6654
425285	69.7467	71.4479	73.1490	74.8502	76.5513	78.2524	79.9536	81.6547	85.0570	88.4593	91.8616	95.2638	98.6661
288	.7472	.4484	.1495	.8507	.5518	.2530	.9541	.6553	.0576	.4599	.8622	.2645	.6668
291	.7477	.4489	.1501	.8512	.5524	.2535	.9547	.6559	.0582	.4605	.8629	.2652	.6675
294	.7482	.4494	.1506	.8517	.5529	.2541	.9553	.6564	.0588	.4612	.8635	.2659	.6682
297	.7487	.4499	.1511	.8523	.5535	.2546	.9558	.6570	.0594	.4618	.8642	.2665	.6689
425300	69.7492	71.4504	73.1516	74.8528	76.5540	78.2552	79.9564	81.6576	85.0600	88.4624	91.8648	95.2672	98.6696

MEGACYCLES PER SECOND

HARMONICS

BASIC FREQ.	112	116	120	124	128	132	136	140	144	148	152	156	160
425300	47.6336	49.3348	51.0360	52.7372	54.4384	56.1396	57.8408	59.5420	61.2432	62.9444	64.6456	66.3468	68.0480
303	.6339	.3351	.0364	.7376	.4388	.1400	.8412	.5424	.2436	.9448	.6461	.3473	.0485
306	.6343	.3355	.0367	.7379	.4392	.1404	.8416	.5428	.2441	.9453	.6465	.3477	.0490
309	.6346	.3358	.0371	.7383	.4396	.1408	.8420	.5433	.2445	.9457	.6470	.3482	.0494
312	.6349	.3362	.0374	.7387	.4399	.1412	.8424	.5437	.2449	.9462	.6474	.3487	.0499
425315	47.6353	49.3365	51.0378	52.7391	54.4403	56.1416	57.8428	59.5441	61.2454	62.9466	64.6479	66.3491	68.0504
318	.6356	.3369	.0382	.7394	.4407	.1420	.8432	.5445	.2458	.9471	.6483	.3496	.0509
321	.6360	.3372	.0385	.7398	.4411	.1424	.8437	.5449	.2462	.9475	.6488	.3501	.0514
324	.6363	.3376	.0389	.7402	.4415	.1428	.8441	.5454	.2467	.9480	.6492	.3505	.0518
327	.6366	.3379	.0392	.7405	.4419	.1432	.8445	.5458	.2471	.9484	.6497	.3510	.0523
425330	47.6370	49.3383	51.0396	52.7409	54.4422	56.1436	57.8449	59.5462	61.2475	62.9488	64.6502	66.3515	68.0528
333	.6373	.3386	.0400	.7413	.4426	.1440	.8453	.5466	.2480	.9493	.6506	.3519	.0533
336	.6376	.3390	.0403	.7417	.4430	.1444	.8457	.5470	.2484	.9497	.6511	.3524	.0538
339	.6380	.3393	.0407	.7420	.4434	.1447	.8461	.5475	.2488	.9502	.6515	.3529	.0542
342	.6383	.3397	.0410	.7424	.4438	.1451	.8465	.5479	.2492	.9506	.6520	.3534	.0547
425345	47.6386	49.3400	51.0414	52.7428	54.4442	56.1455	57.8469	59.5483	61.2497	62.9511	64.6524	66.3538	68.0552
348	.6390	.3404	.0418	.7432	.4445	.1459	.8473	.5487	.2501	.9515	.6529	.3543	.0557
351	.6393	.3407	.0421	.7435	.4449	.1463	.8477	.5491	.2505	.9519	.6534	.3548	.0562
354	.6396	.3411	.0425	.7439	.4453	.1467	.8481	.5496	.2510	.9524	.6538	.3552	.0566
357	.6400	.3414	.0428	.7443	.4457	.1471	.8486	.5500	.2514	.9528	.6543	.3557	.0571
425260	47.6403	49.3418	51.0432	52.7446	54.4461	56.1475	57.8490	59.5504	61.2518	62.9533	64.6547	66.3562	68.0576
363	.6407	.3421	.0436	.7450	.4465	.1479	.8494	.5508	.2523	.9537	.6552	.3566	.0581
366	.6410	.3425	.0439	.7454	.4468	.1483	.8498	.5512	.2527	.9542	.6556	.3571	.0586
369	.6413	.3428	.0443	.7458	.4472	.1487	.8502	.5517	.2531	.9546	.6561	.3576	.0590
372	.6417	.3432	.0446	.7461	.4476	.1491	.8506	.5521	.2536	.9551	.6565	.3580	.0595
425375	47.6420	49.3435	51.0450	52.7465	54.4480	56.1495	57.8510	59.5525	61.2540	62.9555	64.6570	66.3585	68.0600
378	.6423	.3438	.0454	.7469	.4484	.1499	.8514	.5529	.2544	.9559	.6575	.3590	.0605
381	.6427	.3442	.0457	.7472	.4488	.1503	.8518	.5533	.2549	.9564	.6579	.3594	.0610
384	.6430	.3445	.0461	.7476	.4492	.1507	.8522	.5538	.2553	.9568	.6584	.3599	.0614
387	.6433	.3449	.0464	.7480	.4495	.1511	.8526	.5542	.2557	.9573	.6588	.3604	.0619
425390	47.6437	49.3452	51.0468	52.7484	54.4499	56.1515	57.8530	59.5546	61.2562	62.9577	64.6593	66.3608	68.0624
393	.6440	.3456	.0472	.7487	.4503	.1519	.8534	.5550	.2566	.9582	.6597	.3613	.0629
396	.6444	.3459	.0475	.7491	.4507	.1523	.8539	.5554	.2570	.9586	.6602	.3618	.0634
399	.6447	.3463	.0479	.7495	.4511	.1527	.8543	.5559	.2575	.9591	.6606	.3622	.0638
402	.6450	.3466	.0482	.7498	.4515	.1531	.8547	.5563	.2579	.9595	.6611	.3627	.0643
425405	47.6454	49.3470	51.0486	52.7502	54.4518	56.1535	57.8551	59.5567	61.2583	62.9599	64.6616	66.3632	68.0648
408	.6457	.3473	.0490	.7506	.4522	.1539	.8555	.5571	.2588	.9604	.6620	.3636	.0653
411	.6460	.3477	.0493	.7510	.4526	.1543	.8559	.5575	.2592	.9608	.6625	.3641	.0658
414	.6464	.3480	.0497	.7513	.4530	.1546	.8563	.5580	.2596	.9613	.6629	.3646	.0662
417	.6467	.3484	.0500	.7517	.4534	.1550	.8567	.5584	.2600	.9617	.6634	.3651	.0667
425420	47.6470	49.3487	51.0504	52.7521	54.4538	56.1554	57.8571	59.5588	61.2605	62.9622	64.6638	66.3655	68.0672
423	.6474	.3491	.0508	.7525	.4541	.1558	.8575	.5592	.2609	.9626	.6643	.3660	.0677
426	.6477	.3494	.0511	.7528	.4545	.1562	.8579	.5596	.2613	.9630	.6648	.3665	.0682
429	.6480	.3498	.0515	.7532	.4549	.1566	.8583	.5601	.2618	.9635	.6652	.3669	.0686
432	.6484	.3501	.0518	.7536	.4553	.1570	.8588	.5605	.2622	.9639	.6657	.3674	.0691
425435	47.6487	49.3505	51.0522	52.7539	54.4557	56.1574	57.8592	59.5609	61.2626	62.9644	64.6661	66.3679	68.0696
438	.6491	.3508	.0526	.7543	.4561	.1578	.8596	.5613	.2631	.9648	.6666	.3683	.0701
441	.6494	.3512	.0529	.7547	.4564	.1582	.8600	.5617	.2635	.9653	.6670	.3688	.0706
444	.6497	.3515	.0533	.7551	.4568	.1586	.8604	.5622	.2639	.9657	.6675	.3693	.0710
447	.6501	.3519	.0536	.7554	.4572	.1590	.8608	.5626	.2644	.9662	.6679	.3697	.0715
425450	47.6504	49.3522	51.0540	52.7558	54.4576	56.1594	57.8612	59.5630	61.2648	62.9666	64.6684	66.3702	68.0720
453	.6507	.3525	.0544	.7562	.4580	.1598	.8616	.5634	.2652	.9670	.6689	.3707	.0725
456	.6511	.3529	.0547	.7565	.4584	.1602	.8620	.5638	.2657	.9675	.6693	.3711	.0730
459	.6514	.3532	.0551	.7569	.4588	.1606	.8624	.5643	.2661	.9679	.6698	.3716	.0734
462	.6517	.3536	.0554	.7573	.4591	.1610	.8628	.5647	.2665	.9684	.6702	.3721	.0739
425465	47.6521	49.3539	51.0558	52.7577	54.4595	56.1614	57.8632	59.5651	61.2670	62.9688	64.6707	66.3725	68.0744
468	.6524	.3543	.0562	.7580	.4599	.1618	.8636	.5655	.2674	.9693	.6711	.3730	.0749
471	.6528	.3546	.0565	.7584	.4603	.1622	.8641	.5659	.2678	.9697	.6716	.3735	.0754
474	.6531	.3550	.0569	.7588	.4607	.1626	.8645	.5664	.2683	.9702	.6720	.3739	.0758
477	.6534	.3553	.0572	.7591	.4611	.1630	.8649	.5668	.2687	.9706	.6725	.3744	.0763
425480	47.6538	49.3557	51.0576	52.7595	54.4614	56.1634	57.8653	59.5672	61.2691	62.9710	64.6730	66.3749	68.0768
483	.6541	.3560	.0580	.7599	.4618	.1638	.8657	.5676	.2696	.9715	.6734	.3753	.0773
486	.6544	.3564	.0583	.7603	.4622	.1642	.8661	.5680	.2700	.9719	.6739	.3758	.0778
489	.6548	.3567	.0587	.7606	.4626	.1645	.8665	.5685	.2704	.9724	.6743	.3763	.0782
492	.6551	.3571	.0590	.7610	.4630	.1649	.8669	.5689	.2708	.9728	.6748	.3768	.0787
425495	47.6554	49.3574	51.0594	52.7614	54.4634	56.1653	57.8673	59.5693	61.2713	62.9733	64.6752	66.3772	68.0792
498	.6558	.3578	.0598	.7618	.4637	.1657	.8677	.5697	.2717	.9737	.6757	.3777	.0797
501	.6561	.3581	.0601	.7621	.4641	.1661	.8681	.5701	.2721	.9741	.6762	.3782	.0802
504	.6564	.3585	.0605	.7625	.4645	.1665	.8685	.5706	.2726	.9746	.6766	.3786	.0806
507	.6568	.3588	.0608	.7629	.4649	.1669	.8690	.5710	.2730	.9750	.6771	.3791	.0811
425510	47.6571	49.3592	51.0612	52.7632	54.4653	56.1673	57.8694	59.5714	61.2734	62.9755	64.6775	66.3796	68.0816
513	.6575	.3595	.0616	.7636	.4657	.1677	.8698	.5718	.2739	.9759	.6780	.3800	.0821
516	.6578	.3599	.0619	.7640	.4660	.1681	.8702	.5722	.2743	.9764	.6784	.3805	.0826
519	.6581	.3602	.0623	.7644	.4664	.1685	.8706	.5727	.2747	.9768	.6789	.3810	.0830
522	.6585	.3606	.0626	.7647	.4668	.1689	.8710	.5731	.2752	.9773	.6793	.3814	.0835
425525	47.6588	49.3609	51.0630	52.7651	54.4672	56.1693	57.8714	59.5735	61.2756	62.9777	64.6798	66.3819	68.0840
528	.6591	.3612	.0634	.7655	.4676	.1697	.8718	.5739	.2760	.9781	.6803	.3824	.0845
531	.6595	.3616	.0637	.7658	.4680	.1701	.8722	.5743	.2765	.9786	.6807	.3828	.0850
534	.6598	.3619	.0641	.7662	.4684	.1705	.8726	.5748	.2769	.9790	.6812	.3833	.0854
537	.6601	.3623	.0644	.7666	.4687	.1709	.8730	.5752	.2773	.9795	.6816	.3838	.0859
425540	47.6605	49.3626	51.0648	52.7670	54.4691	56.1713	57.8734	59.5756	61.2778	62.9799	64.6821	66.3842	68.0864
543	.6608	.3630	.0652	.7673	.4695	.1717	.8738	.5760	.2782	.9804	.6825	.3847	.0869
546	.6612	.3633	.0655	.7677	.4699	.1721	.8743	.5764	.2786	.9808	.6830	.3852	.0874
549	.6615	.3637	.0659	.7681	.4703	.1725	.8747	.5769	.2791	.9813	.6834	.3856	.0878
552	.6618	.3640	.0662	.7684	.4707	.1729	.8751	.5773	.2795	.9817	.6839	.3861	.0883
425555	47.6622	49.3644	51.0666	52.7688	54.4710	56.1733	57.8755	59.5777	61.2799	62.9821	64.6844	66.3866	68.0888
558	.6625	.3647	.0670	.7692	.4714	.1737	.8759	.5781	.2804	.9826	.6848	.3870	.0893
561	.6628	.3651	.0673	.7696	.4718	.1741	.8763	.5785	.2808	.9830	.6853	.3875	.0898
564	.6632	.3654	.0677	.7699	.4722	.1744	.8767	.5790	.2812	.9835	.6857	.3880	.0902
567	.6635	.3658	.0680	.7703	.4726	.1748	.8771	.5794	.2816	.9839	.6862	.3885	.0907
425570	47.6638	49.3661	51.0684	52.7707	54.4730	56.1752	57.8775	59.5798	61.2321	62.9844	64.6866	66.3889	68.0912
573	.6642	.3665	.0688	.7711	.4733	.1756	.8779	.5802	.2825	.9848	.6871	.3894	.0917
576	.6645	.3668	.0691	.7714	.4737	.1760	.8783	.5806	.2829	.9852	.6876	.3899	.0922
579	.6648	.3672	.0695	.7718	.4741	.1764	.8787	.5811	.2834	.9857	.6880	.3903	.0926
582	.6652	.3675	.0698	.7722	.4745	.1768	.8792	.5815	.2838	.9861	.6885	.3908	.0931
425585	47.6655	49.3679	51.0702	52.7725	54.4749	56.1772	57.8796	59.5819	61.2842	62.9866	64.6889	66.3913	68.0936
588	.6659	.3682	.0706	.7729	.4753	.1776	.8800	.5823	.2847	.9870	.6894	.3917	.0941
591	.6662	.3686	.0709	.7733	.4756	.1780	.8804	.5827	.2851	.9875	.6898	.3922	.0946
594	.6665	.3689	.0713	.7737	.4760	.1784	.8808	.5832	.2855	.9879	.6903	.3927	.0950
597	.6669	.3693	.0716	.7740	.4764	.1788	.8812	.5836	.2860	.9884	.6907	.3931	.0955
425600	47.6672	49.3696	51.0720	52.7744	54.4768	56.1792	57.8816	59.5840	61.2864	62.9888	64.6912	66.3936	68.0960

MEGACYCLES PER SECOND

HARMONICS

BASIC FREQ.	164	168	172	176	180	184	188	192	200	208	216	224	232
425300	69.7492	71.4504	73.1516	74.8528	76.5540	78.2552	79.9564	81.6576	85.0600	88.4624	91.8648	95.2672	98.6696
303	.7497	.4509	.1521	.8533	.5545	.2558	.9570	.6582	.0606	.4630	.8654	.2679	.6703
306	.7502	.4514	.1526	.8539	.5551	.2563	.9575	.6588	.0612	.4636	.8661	.2685	.6710
309	.7507	.4519	.1531	.8544	.5556	.2569	.9581	.6593	.0618	.4643	.8667	.2692	.6717
312	.7512	.4524	.1537	.8549	.5562	.2574	.9587	.6599	.0624	.4649	.8674	.2699	.6724
425315	69.7517	71.4529	73.1542	74.8554	76.5567	78.2580	79.9592	81.6605	85.0630	88.4655	91.8680	95.2706	98.6731
318	.7522	.4534	.1547	.8560	.5572	.2585	.9598	.6611	.0636	.4661	.8687	.2712	.6738
321	.7526	.4539	.1552	.8565	.5578	.2591	.9603	.6616	.0642	.4668	.8693	.2719	.6745
324	.7531	.4544	.1557	.8570	.5583	.2596	.9609	.6622	.0648	.4674	.8700	.2726	.6752
327	.7536	.4549	.1562	.8576	.5589	.2602	.9615	.6628	.0654	.4680	.8706	.2732	.6759
425330	69.7541	71.4554	73.1568	74.8581	76.5594	78.2607	79.9620	81.6634	85.0660	88.4686	91.8713	95.2739	98.6766
333	.7546	.4559	.1573	.8586	.5599	.2613	.9626	.6639	.0666	.4693	.8719	.2746	.6773
336	.7551	.4564	.1578	.8591	.5605	.2618	.9632	.6645	.0672	.4699	.8726	.2753	.6780
339	.7556	.4570	.1583	.8597	.5610	.2624	.9637	.6651	.0678	.4705	.8732	.2759	.6786
342	.7561	.4575	.1588	.8602	.5616	.2629	.9643	.6657	.0684	.4711	.8739	.2766	.6793
425345	69.7566	71.4580	73.1593	74.8607	76.5621	78.2635	79.9649	81.6662	85.0690	88.4718	91.8745	95.2773	98.6800
348	.7571	.4585	.1599	.8612	.5626	.2640	.9654	.6668	.0696	.4724	.8752	.2780	.6807
351	.7576	.4590	.1604	.8618	.5632	.2646	.9660	.6674	.0702	.4730	.8758	.2786	.6814
354	.7581	.4595	.1609	.8623	.5637	.2651	.9666	.6680	.0708	.4736	.8765	.2793	.6821
357	.7585	.4600	.1614	.8628	.5643	.2657	.9671	.6685	.0714	.4743	.8771	.2800	.6828
425360	69.7590	71.4605	73.1619	74.8634	76.5648	78.2662	79.9677	81.6691	85.0720	88.4749	91.8778	95.2806	98.6835
363	.7595	.4610	.1624	.8639	.5653	.2668	.9682	.6697	.0726	.4755	.8784	.2813	.6842
366	.7600	.4615	.1630	.8644	.5659	.2673	.9688	.6703	.0732	.4761	.8791	.2820	.6849
369	.7605	.4620	.1635	.8649	.5664	.2679	.9694	.6708	.0738	.4768	.8797	.2827	.6856
372	.7610	.4625	.1640	.8655	.5670	.2684	.9699	.6714	.0744	.4774	.8804	.2833	.6863
425375	69.7615	71.4630	73.1645	74.8660	76.5675	78.2690	79.9705	81.6720	85.0750	88.4780	91.8810	95.2840	98.6870
378	.7620	.4635	.1650	.8665	.5680	.2696	.9711	.6726	.0756	.4786	.8816	.2847	.6877
381	.7625	.4640	.1655	.8671	.5686	.2701	.9716	.6732	.0762	.4792	.8823	.2853	.6884
384	.7630	.4645	.1660	.8676	.5691	.2707	.9722	.6737	.0768	.4799	.8829	.2860	.6891
387	.7635	.4650	.1666	.8681	.5697	.2712	.9728	.6743	.0774	.4805	.8836	.2867	.6898
425390	69.7640	71.4655	73.1671	74.8686	76.5702	78.2718	79.9733	81.6749	85.0780	88.4811	91.8842	95.2874	98.6905
393	.7645	.4660	.1676	.8692	.5707	.2723	.9739	.6755	.0786	.4817	.8849	.2880	.6912
396	.7649	.4665	.1681	.8697	.5713	.2729	.9744	.6760	.0792	.4824	.8855	.2887	.6919
399	.7654	.4670	.1686	.8702	.5718	.2734	.9750	.6766	.0798	.4830	.8862	.2894	.6926
402	.7659	.4675	.1691	.8708	.5724	.2740	.9756	.6772	.0804	.4836	.8868	.2900	.6933
425405	69.7664	71.4680	73.1697	74.8713	76.5729	78.2745	79.9761	81.6778	85.0810	88.4842	91.8875	95.2907	98.6940
408	.7669	.4685	.1702	.8718	.5734	.2751	.9767	.6783	.0816	.4849	.8881	.2914	.6947
411	.7674	.4690	.1707	.8723	.5740	.2756	.9773	.6789	.0822	.4855	.8888	.2921	.6954
414	.7679	.4696	.1712	.8729	.5745	.2762	.9778	.6795	.0828	.4861	.8894	.2927	.6960
417	.7684	.4701	.1717	.8734	.5751	.2767	.9784	.6801	.0834	.4867	.8901	.2934	.6967
425420	69.7689	71.4706	73.1722	74.8739	76.5756	78.2773	79.9790	81.6806	85.0840	88.4874	91.8907	95.2941	98.6974
423	.7694	.4711	.1728	.8744	.5761	.2778	.9795	.6812	.0846	.4880	.8914	.2948	.6981
426	.7699	.4716	.1733	.8750	.5767	.2784	.9801	.6818	.0852	.4886	.8920	.2954	.6988
429	.7704	.4721	.1738	.8755	.5772	.2789	.9807	.6824	.0858	.4892	.8927	.2961	.6995
432	.7708	.4726	.1743	.8760	.5778	.2795	.9812	.6829	.0864	.4899	.8933	.2968	.7002
425435	69.7713	71.4731	73.1748	74.8766	76.5783	78.2800	79.9818	81.6835	85.0870	88.4905	91.8940	95.2974	98.7009
438	.7718	.4736	.1753	.8771	.5788	.2806	.9823	.6841	.0876	.4911	.8946	.2981	.7016
441	.7723	.4741	.1759	.8776	.5794	.2811	.9829	.6847	.0882	.4917	.8953	.2988	.7023
444	.7728	.4746	.1764	.8781	.5799	.2817	.9835	.6852	.0888	.4924	.8959	.2995	.7030
447	.7733	.4751	.1769	.8787	.5805	.2822	.9840	.6858	.0894	.4930	.8966	.3001	.7037
425450	69.7738	71.4756	73.1774	74.8792	76.5810	78.2828	79.9846	81.6864	85.0900	88.4936	91.8972	95.3008	98.7044
453	.7743	.4761	.1779	.8797	.5815	.2834	.9852	.6870	.0906	.4942	.8978	.3015	.7051
456	.7748	.4766	.1784	.8803	.5821	.2839	.9857	.6876	.0912	.4948	.8985	.3021	.7058
459	.7753	.4771	.1789	.8808	.5826	.2845	.9863	.6881	.0918	.4955	.8991	.3028	.7065
462	.7758	.4776	.1795	.8813	.5832	.2850	.9869	.6887	.0924	.4961	.8998	.3035	.7072
425465	69.7763	71.4781	73.1800	74.8818	76.5837	78.2856	79.9874	81.6893	85.0930	88.4967	91.9004	95.3042	98.7079
468	.7768	.4786	.1805	.8824	.5842	.2861	.9880	.6899	.0936	.4973	.9011	.3048	.7086
471	.7772	.4791	.1810	.8829	.5848	.2867	.9885	.6904	.0942	.4980	.9017	.3055	.7093
474	.7777	.4796	.1815	.8834	.5853	.2872	.9891	.6910	.0948	.4986	.9024	.3062	.7100
477	.7782	.4801	.1820	.8840	.5859	.2878	.9897	.6916	.0954	.4992	.9030	.3068	.7107
425480	69.7787	71.4806	73.1826	74.8845	76.5864	78.2883	79.9902	81.6922	85.0960	88.4998	91.9037	95.3075	98.7114
483	.7792	.4811	.1831	.8850	.5869	.2889	.9908	.6927	.0966	.5005	.9043	.3082	.7121
486	.7797	.4816	.1836	.8855	.5875	.2894	.9914	.6933	.0972	.5011	.9050	.3089	.7128
489	.7802	.4822	.1841	.8861	.5880	.2900	.9919	.6939	.0978	.5017	.9056	.3095	.7134
492	.7807	.4827	.1946	.8866	.5886	.2905	.9925	.6945	.0984	.5023	.9063	.3102	.7141
425495	69.7812	71.4832	73.1851	74.8871	76.5891	78.2911	79.9931	81.6950	85.0990	88.5030	91.9069	95.3109	98.7148
498	.7817	.4837	.1857	.8876	.5896	.2916	.9936	.6956	.0996	.5036	.9076	.3116	.7155
501	.7822	.4842	.1862	.8882	.5902	.2922	.9942	.6962	.1002	.5042	.9082	.3122	.7162
504	.7827	.4847	.1867	.8887	.5907	.2927	.9948	.6968	.1008	.5048	.9089	.3129	.7169
507	.7831	.4852	.1872	.8892	.5913	.2933	.9953	.6973	.1014	.5055	.9095	.3136	.7176
425510	69.7836	71.4857	73.1877	74.8898	76.5918	78.2938	79.9959	81.6979	85.1020	88.5061	91.9102	95.3142	98.7183
513	.7841	.4862	.1882	.8903	.5923	.2944	.9964	.6985	.1026	.5067	.9108	.3149	.7190
516	.7846	.4867	.1888	.8908	.5929	.2949	.9970	.6991	.1032	.5073	.9115	.3156	.7197
519	.7851	.4872	.1893	.8913	.5934	.2955	.9976	.6996	.1038	.5080	.9121	.3163	.7204
522	.7856	.4877	.1898	.8919	.5940	.2960	.9981	.7002	.1044	.5086	.9128	.3169	.7211
425525	69.7861	71.4882	73.1903	74.8924	76.5945	78.2966	79.9987	81.7008	85.1050	88.5092	91.9134	95.3176	98.7218
528	.7866	.4887	.1908	.8929	.5950	.2972	.9993	.7014	.1056	.5098	.9140	.3183	.7225
531	.7871	.4892	.1913	.8935	.5956	.2977	.9998	.7020	.1062	.5104	.9147	.3189	.7232
534	.7876	.4897	.1918	.8940	.5961	.2983	80.0004	.7025	.1068	.5111	.9153	.3196	.7239
537	.7881	.4902	.1924	.8945	.5967	.2988	.0010	.7031	.1074	.5117	.9160	.3203	.7246
425540	69.7886	71.4907	73.1929	74.8950	76.5972	78.2994	80.0015	81.7037	85.1080	88.5123	91.9166	95.3210	98.7253
543	.7891	.4912	.1934	.8956	.5977	.2999	.0021	.7043	.1086	.5129	.9173	.3216	.7260
546	.7895	.4917	.1939	.8961	.5983	.3005	.0026	.7048	.1092	.5136	.9179	.3223	.7267
549	.7900	.4922	.1944	.8966	.5988	.3010	.0032	.7054	.1098	.5142	.9186	.3230	.9274
552	.7905	.4927	.1949	.8972	.5994	.3016	.0038	.7060	.1104	.5148	.9192	.3236	.7281
425555	69.7910	71.4932	73.1955	74.8977	76.5999	78.3021	80.0043	81.7066	85.1110	88.5154	91.9199	95.3243	98.7288
558	.7915	.4937	.1960	.8982	.6004	.3027	.0049	.7071	.1116	.5161	.9205	.3250	.7295
561	.7920	.4942	.1965	.8987	.6010	.3032	.0055	.7077	.1122	.5167	.9212	.3257	.7302
564	.7925	.4948	.1970	.8993	.6015	.3038	.0060	.7083	.1128	.5173	.9218	.3263	.7308
567	.7930	.4953	.1975	.8998	.6021	.3043	.0066	.7089	.1134	.5179	.9225	.3270	.7315
425570	69.7935	71.4958	73.1980	74.9003	76.6026	78.3049	80.0072	81.7094	85.1140	88.5186	91.9231	95.3277	98.7322
573	.7940	.4963	.1986	.9008	.6031	.3054	.0077	.7100	.1146	.5192	.9238	.3284	.7329
576	.7945	.4968	.1991	.9014	.6037	.3060	.0083	.7106	.1152	.5198	.9244	.3290	.7336
579	.7950	.4973	.1996	.9019	.6042	.3065	.0089	.7112	.1158	.5204	.9251	.3297	.7343
582	.7954	.4978	.2001	.9024	.6048	.3071	.0094	.7117	.1164	.5211	.9257	.3304	.7350
425585	69.7959	71.4983	73.2006	74.9030	76.6053	78.3076	80.0100	81.7123	85.1170	88.5217	91.9264	95.3310	98.7357
588	.7964	.4988	.2011	.9035	.6058	.3082	.0105	.7129	.1176	.5223	.9270	.3317	.7364
591	.7969	.4993	.2017	.9040	.6064	.3087	.0111	.7135	.1182	.5229	.9277	.3324	.7371
594	.7974	.4998	.2022	.9045	.6069	.3093	.0117	.7140	.1188	.5236	.9283	.3331	.7378
597	.7979	.5003	.2027	.9051	.6075	.3098	.0122	.7146	.1194	.5242	.9290	.3337	.7385
425600	69.7984	71.5008	73.2032	74.9056	76.6080	78.3104	80.0128	81.7152	85.1200	88.5248	91.9296	95.3344	98.7392

MEGACYCLES PER SECOND

H A R M O N I C S

BASIC FREQ.	112	116	120	124	128	132	136	140	144	148	152	156	160
425600	47.6672	49.3696	51.0720	52.7744	54.4768	56.1792	57.8816	59.5840	61.2864	62.9888	64.6912	66.3936	68.0960
603	.6675	.3699	.0724	.7748	.4772	.1796	.8820	.5844	.2868	.9892	.6917	.3941	.0965
606	.6679	.3703	.0727	.7751	.4776	.1800	.8824	.5848	.2873	.9897	.6921	.3945	.0970
609	.6682	.3706	.0731	.7755	.4780	.1804	.8828	.5853	.2877	.9901	.6926	.3950	.0974
612	.6685	.3710	.0734	.7759	.4783	.1808	.8832	.5857	.2881	.9906	.6930	.3955	.0979
425615	47.6689	49.3713	51.0738	52.7763	54.4787	56.1812	57.8836	59.5861	61.2886	62.9910	64.6935	66.3959	68.0984
618	.6692	.3717	.0742	.7766	.4791	.1816	.8840	.5865	.2890	.9915	.6939	.3964	.0989
621	.6696	.3720	.0745	.7770	.4795	.1820	.8845	.5869	.2894	.9919	.6944	.3969	.0994
624	.6699	.3724	.0749	.7774	.4799	.1824	.8849	.5874	.2899	.9924	.6948	.3973	.0998
627	.6702	.3727	.0752	.7777	.4803	.1828	.8853	.5878	.2903	.9928	.6953	.3978	.1003
425630	47.6706	49.3731	51.0756	52.7781	54.4806	56.1832	57.8857	59.5882	61.2907	62.9932	64.6958	66.3983	68.1008
633	.6709	.3734	.0760	.7785	.4810	.1836	.8861	.5886	.2912	.9937	.6962	.3987	.1013
636	.6712	.3738	.0763	.7789	.4814	.1840	.8865	.5890	.2916	.9941	.6967	.3992	.1018
639	.6716	.3741	.0767	.7792	.4818	.1843	.8869	.5895	.2920	.9946	.6971	.3997	.1022
642	.6719	.3745	.0770	.7796	.4822	.1847	.8873	.5899	.2924	.9950	.6976	.4002	.1027
425645	47.6722	49.3748	51.0774	52.7800	54.4826	56.1851	57.8877	59.5903	61.2929	62.9955	64.6980	66.4006	68.1032
648	.6726	.3752	.0778	.7804	.4829	.1855	.8881	.5907	.2933	.9959	.6985	.4011	.1037
651	.6729	.3755	.0781	.7807	.4833	.1859	.8885	.5911	.2937	.9963	.6990	.4016	.1042
654	.6732	.3759	.0785	.7811	.4837	.1863	.8889	.5916	.2942	.9968	.6994	.4020	.1046
657	.6736	.3762	.0788	.7815	.4841	.1867	.8894	.5920	.2946	.9972	.6999	.4025	.1051
425660	47.6739	49.3766	51.0792	52.7818	54.4845	56.1871	57.8898	59.5924	61.2950	62.9977	64.7003	66.4030	68.1056
663	.6743	.3769	.0796	.7822	.4849	.1875	.8902	.5928	.2955	.9981	.7008	.4034	.1061
666	.6746	.3773	.0799	.7826	.4852	.1879	.8906	.5932	.2959	.9986	.7012	.4039	.1066
669	.6749	.3776	.0803	.7830	.4856	.1883	.8910	.5937	.2963	.9990	.7017	.4044	.1070
672	.6753	.3780	.0806	.7833	.4860	.1887	.8914	.5941	.2968	.9995	.7021	.4048	.1075
425675	47.6756	49.3783	51.0810	52.7837	54.4864	56.1891	57.8918	59.5945	61.2972	62.9999	64.7026	66.4053	68.1080
678	.6759	.3786	.0814	.7841	.4868	.1895	.8922	.5949	.2976	63.0003	.7031	.4058	.1085
681	.6763	.3790	.0817	.7844	.4872	.1899	.8926	.5953	.2981	.0008	.7035	.4062	.1090
684	.6766	.3793	.0821	.7848	.4876	.1903	.8930	.5958	.2985	.0012	.7040	.4067	.1094
687	.6769	.3797	.0824	.7852	.4879	.1907	.8934	.5962	.2989	.0017	.7044	.4072	.1099
425690	47.6773	49.3800	51.0828	52.7856	54.4883	56.1911	57.8938	59.5966	61.2994	63.0021	64.7049	66.4076	68.1104
693	.6776	.3804	.0832	.7859	.4887	.1915	.8942	.5970	.2998	.0026	.7053	.4081	.1109
696	.6780	.3807	.0835	.7863	.4891	.1919	.8947	.5974	.3002	.0030	.7058	.4086	.1114
699	.6783	.3811	.0839	.7867	.4895	.1923	.8951	.5979	.3007	.0035	.7062	.4090	.1118
702	.6786	.3814	.0842	.7870	.4899	.1927	.8955	.5983	.3011	.0039	.7067	.4095	.1123
425705	47.6790	49.3818	51.0846	52.7874	54.4902	56.1931	57.8959	59.5987	61.3015	63.0043	64.7072	66.4100	68.1128
708	.6793	.3821	.0850	.7878	.4906	.1935	.8963	.5991	.3020	.0048	.7076	.4104	.1138
711	.6796	.3825	.0853	.7882	.4910	.1939	.8967	.5995	.3024	.0052	.7081	.4109	.1138
714	.6800	.3828	.0857	.7885	.4914	.1942	.8971	.6000	.3028	.0057	.7085	.4114	.1142
717	.6803	.3832	.0860	.7889	.4918	.1946	.8975	.6004	.3032	.0061	.7090	.4119	.1147
425720	47.6806	49.3835	51.0864	52.7893	54.4922	56.1950	57.8979	59.6008	61.3037	63.0066	64.7094	66.4123	68.1152
723	.6810	.3839	.0868	.7897	.4925	.1954	.8983	.6012	.3041	.0070	.7099	.4128	.1157
726	.6813	.3842	.0871	.7900	.4929	.1958	.8987	.6016	.3045	.0074	.7104	.4133	.1162
729	.6816	.3846	.0875	.7904	.4933	.1962	.8991	.6021	.3050	.0079	.7108	.4137	.1166
732	.6820	.3849	.0878	.7908	.4937	.1966	.8996	.6025	.3054	.0083	.7113	.4142	.1171
425735	47.6823	49.3853	51.0882	52.7911	54.4941	56.1970	57.9000	59.6029	61.3058	63.0088	64.7117	66.4147	68.1176
738	.6827	.3856	.0886	.7915	.4945	.1974	.9004	.6033	.3063	.0092	.7122	.4151	.1181
741	.6830	.3860	.0889	.7919	.4948	.1978	.9008	.6037	.3067	.0097	.7126	.4156	.1186
744	.6833	.3863	.0893	.7923	.4952	.1982	.9012	.6042	.3071	.0101	.7131	.4161	.1190
747	.6837	.3867	.0896	.7926	.4956	.1986	.9016	.6046	.3076	.0106	.7135	.4165	.1195
425750	47.6840	49.3870	51.0900	52.7930	54.4960	56.1990	57.9020	59.6050	61.3080	63.0110	64.7140	66.4170	68.1200
753	.6843	.3873	.0904	.7934	.4964	.1994	.9024	.6054	.3084	.0114	.7145	.4175	.1205
756	.6847	.3877	.0907	.7937	.4968	.1998	.9028	.6058	.3089	.0119	.7149	.4179	.1210
759	.6850	.3880	.0911	.7941	.4972	.2002	.9032	.6063	.3093	.0123	.7154	.4184	.1214
762	.6853	.3884	.0914	.7945	.4975	.2006	.9036	.6067	.3097	.0128	.7158	.4189	.1219
425765	47.6857	49.3887	51.0918	52.7949	54.4979	56.2010	57.9040	59.6071	61.3102	63.0132	64.7163	66.4193	68.1224
768	.6860	.3891	.0922	.7952	.4983	.2014	.9044	.6075	.3106	.0137	.7167	.4198	.1229
771	.6864	.3894	.0925	.7956	.4987	.2018	.9049	.6079	.3110	.0141	.7172	.4203	.1234
774	.6867	.3898	.0929	.7960	.4991	.2022	.9053	.6084	.3115	.0146	.7176	.4207	.1238
777	.6870	.3901	.0932	.7963	.4995	.2026	.9057	.6088	.3119	.0150	.7181	.4212	.1243
425780	47.6874	49.3905	51.0936	52.7967	54.4998	56.2030	57.9061	59.6092	61.3123	63.0154	64.7186	66.4217	68.1248
783	.6877	.3908	.0940	.7971	.5002	.2034	.9065	.6096	.3128	.0159	.7190	.4221	.1253
786	.6880	.3912	.0943	.7975	.5006	.2038	.9069	.6100	.3132	.0163	.7195	.4226	.1258
789	.6884	.3915	.0947	.7978	.5010	.2041	.9073	.6105	.3136	.0168	.7199	.4231	.1262
792	.6887	.3919	.0950	.7982	.5014	.2045	.9077	.6109	.3140	.0172	.7204	.4236	.1267
425795	47.6890	49.3922	51.0954	52.7986	54.5018	56.2049	57.9081	59.6113	61.3145	63.0177	64.7208	66.4240	68.1272
798	.6894	.3926	.0958	.7990	.5021	.2053	.9085	.6117	.3149	.0181	.7213	.4245	.1277
801	.6897	.3929	.0961	.7993	.5025	.2057	.9089	.6121	.3153	.0185	.7218	.4250	.1282
804	.6900	.3933	.0965	.7997	.5029	.2061	.9093	.6126	.3158	.0190	.7222	.4254	.1286
807	.6904	.3936	.0968	.8001	.5033	.2065	.9098	.6130	.3162	.0194	.7227	.4259	.1291
425810	47.6907	49.3940	51.0972	52.8004	54.5037	56.2069	57.9102	59.6134	61.3166	63.0199	64.7231	66.4264	68.1296
813	.6911	.3943	.0976	.8008	.5041	.2073	.9106	.6138	.3171	.0203	.7236	.4268	.1301
816	.6914	.3947	.0979	.8012	.5044	.2077	.9110	.6142	.3175	.0208	.7240	.4273	.1306
819	.6917	.3950	.0983	.8016	.5048	.2081	.9114	.6147	.3179	.0212	.7245	.4278	.1310
822	.6921	.3954	.0986	.8019	.5052	.2085	.9118	.6151	.3184	.0217	.7249	.4282	.1315
425825	47.6924	49.3957	51.0990	52.8023	54.5056	56.2089	57.9122	59.6155	61.3188	63.0221	64.7254	66.4287	68.1320
828	.6927	.3960	.0994	.8027	.5060	.2093	.9126	.6159	.3192	.0225	.7259	.4292	.1325
831	.6931	.3964	.0997	.8030	.5064	.2097	.9130	.6163	.3197	.0230	.7263	.4296	.1330
834	.6934	.3967	.1001	.8034	.5068	.2101	.9134	.6168	.3201	.0234	.7268	.4301	.1334
837	.6937	.3971	.1004	.8038	.5071	.2105	.9138	.6172	.3205	.0239	.7272	.4306	.1339
425840	47.6941	49.3974	51.1008	52.8042	54.5075	56.2109	57.9142	59.6176	61.3210	63.0243	64.7277	66.4310	68.1344
843	.6944	.3978	.1012	.8045	.5079	.2113	.9146	.6180	.3214	.0248	.7281	.4315	.1349
846	.6948	.3981	.1015	.8049	.5083	.2117	.9151	.6184	.3218	.0252	.7286	.4320	.1354
849	.6951	.3985	.1019	.8053	.5087	.2121	.9155	.6189	.3223	.0257	.7290	.4324	.1358
852	.6954	.3988	.1022	.8056	.5091	.2125	.9159	.6193	.3227	.0261	.7295	.4329	.1363
425855	47.6958	49.3992	51.1026	52.8060	54.5094	56.2129	57.9163	59.6197	61.3231	63.0265	64.7300	66.4334	68.1368
858	.6961	.3995	.1030	.8064	.5098	.2133	.9167	.6201	.3236	.0270	.7304	.4338	.1373
861	.6964	.3999	.1033	.8068	.5102	.2137	.9171	.6205	.3240	.0274	.7309	.4343	.1378
864	.6968	.4002	.1037	.8071	.5106	.2140	.9175	.6210	.3244	.0279	.7313	.4348	.1382
867	.6971	.4006	.1040	.8075	.5110	.2144	.9179	.6214	.3248	.0283	.7318	.4353	.1387
425870	47.6974	49.4009	51.1044	52.8079	54.5114	56.2148	57.9183	59.6218	61.3253	63.0288	64.7322	66.4357	68.1392
873	.6978	.4013	.1048	.8083	.5117	.2152	.9187	.6222	.3257	.0292	.7327	.4362	.1397
876	.6981	.4016	.1051	.8086	.5121	.2156	.9191	.6226	.3261	.0296	.7332	.4367	.1402
879	.6984	.4020	.1055	.8090	.5125	.2160	.9195	.6231	.3266	.0301	.7336	.4371	.1406
882	.6988	.4023	.1058	.8094	.5129	.2164	.9200	.6235	.3270	.0305	.7341	.4376	.1411
425885	47.6991	49.4027	51.1062	52.8097	54.5133	56.2168	57.9204	59.6239	61.3274	63.0310	64.7345	66.4381	68.1416
888	.6995	.4030	.1066	.8101	.5137	.2172	.9208	.6243	.3279	.0314	.7350	.4385	.1421
891	.6998	.4034	.1069	.8105	.5140	.2176	.9212	.6247	.3283	.0319	.7354	.4390	.1426
894	.7001	.4037	.1073	.8109	.5144	.2180	.9216	.6252	.3287	.0323	.7359	.4395	.1430
897	.7005	.4041	.1076	.8112	.5148	.2184	.9220	.6256	.3292	.0328	.7363	.4399	.1435
425900	47.7008	49.4044	51.1080	52.8116	54.5152	56.2188	57.9224	59.6260	61.3296	63.0332	64.7368	66.4404	68.1440

MEGACYCLES PER SECOND

HARMONICS

BASIC FREQ.	164	168	172	176	180	184	188	192	200	208	216	224	232
425600	69.7984	71.5008	73.2032	74.9056	76.6080	78.3104	80.0128	81.7152	85.1200	88.5248	91.9296	95.3344	98.7392
603	.7989	.5013	.2037	.9061	.6085	.3110	.0134	.7158	.1206	.5254	.9302	.3351	.7399
606	.7994	.5018	.2042	.9067	.6091	.3115	.0139	.7164	.1212	.5260	.9309	.3357	.7406
609	.7999	.5023	.2047	.9072	.6096	.3121	.0145	.7169	.1218	.5267	.9315	.3364	.7413
612	.8004	.5028	.2053	.9077	.6102	.3126	.0151	.7175	.1224	.5273	.9322	.3371	.7420
425615	69.8009	71.5033	73.2058	74.9082	76.6107	78.3132	80.0156	81.7181	85.1230	88.5279	91.9328	95.3378	98.7427
618	.8014	.5038	.2063	.9088	.6112	.3137	.0162	.7187	.1236	.5285	.9335	.3384	.7434
621	.8018	.5043	.2068	.9093	.6118	.3143	.0167	.7192	.1242	.5292	.9341	.3391	.7441
624	.8023	.5048	.2073	.9098	.6123	.3148	.0173	.7198	.1248	.5298	.9348	.3398	.7448
627	.8028	.5053	.2078	.9104	.6129	.3154	.0179	.7204	.1254	.5304	.9354	.3404	.7455
425630	69.8033	71.5058	73.2084	74.9109	76.6134	78.3159	80.0184	81.7210	85.1260	88.5310	91.9361	95.3411	98.7462
633	.8038	.5063	.2089	.9114	.6139	.3165	.0190	.7215	.1266	.5317	.9367	.3418	.7469
636	.8043	.5068	.2094	.9119	.6145	.3170	.0196	.7221	.1272	.5323	.9374	.3425	.7476
639	.8048	.5074	.2099	.9125	.6150	.3176	.0201	.7227	.1278	.5329	.9380	.3431	.7482
642	.8053	.5079	.2104	.9130	.6156	.3181	.0207	.7233	.1284	.5335	.9387	.3438	.7489
425645	69.8058	71.5084	73.2109	74.9135	76.6161	78.3187	80.0213	81.7238	85.1290	88.5342	91.9393	95.3445	98.7496
648	.8063	.5089	.2115	.9140	.6166	.3192	.0218	.7244	.1296	.5348	.9400	.3452	.7503
651	.8068	.5094	.2120	.9146	.6172	.3198	.0224	.7250	.1302	.5354	.9406	.3458	.7510
654	.8073	.5099	.2125	.9151	.6177	.3203	.0230	.7256	.1308	.5360	.9413	.3465	.7517
657	.8077	.5104	.2130	.9156	.6183	.3209	.0235	.7261	.1314	.5367	.9419	.3472	.7524
425660	69.8082	71.5109	73.2135	74.9162	76.6188	78.3214	80.0241	81.7267	85.1320	88.5373	91.9426	95.3478	98.7531
663	.8087	.5114	.2140	.9167	.6193	.3220	.0246	.7273	.1326	.5379	.9432	.3485	.7538
666	.8092	.5119	.2146	.9172	.6199	.3225	.0252	.7279	.1332	.5385	.9439	.3492	.7545
669	.8097	.5124	.2151	.9177	.6204	.3231	.0258	.7284	.1338	.5392	.9445	.3499	.7552
672	.8102	.5129	.2156	.9183	.6210	.3236	.0263	.7290	.1344	.5398	.9452	.3505	.7559
425675	69.8107	71.5134	73.2161	74.9188	76.6215	78.3242	80.0269	81.7296	85.1350	88.5404	91.9458	95.3512	98.7566
678	.8112	.5139	.2166	.9193	.6220	.3248	.0275	.7302	.1356	.5410	.9464	.3519	.7573
681	.8117	.5144	.2171	.9199	.6226	.3253	.0280	.7308	.1362	.5416	.9471	.3525	.7580
684	.8122	.5149	.2176	.9204	.6231	.3259	.0286	.7313	.1368	.5423	.9477	.3532	.7587
687	.8127	.5154	.2182	.9209	.6237	.3264	.0292	.7319	.1374	.5429	.9484	.3539	.7594
425690	69.8132	71.5159	73.2187	74.9214	76.6242	78.3270	80.0297	81.7325	85.1380	88.5435	91.9490	95.3546	98.7601
693	.8137	.5164	.2192	.9220	.6247	.3275	.0303	.7331	.1386	.5441	.9497	.3552	.7608
696	.8141	.5169	.2197	.9225	.6253	.3281	.0308	.7336	.1392	.5448	.9503	.3559	.7615
699	.8146	.5174	.2202	.9230	.6258	.3286	.0314	.7342	.1398	.5454	.9510	.3566	.7622
702	.8151	.5179	.2207	.9236	.6264	.3292	.0320	.7348	.1404	.5460	.9516	.3572	.7629
425705	69.8156	71.5184	73.2213	74.9241	76.6269	78.3297	80.0325	81.7354	85.1410	88.5466	91.9523	95.3579	98.7636
708	.8161	.5189	.2218	.9246	.6274	.3303	.0331	.7359	.1416	.5473	.9529	.3586	.7643
711	.8166	.5194	.2223	.9251	.6280	.3308	.0337	.7365	.1422	.5479	.9536	.3593	.7650
714	.8171	.5200	.2228	.9257	.6285	.3314	.0342	.7371	.1428	.5485	.9542	.3599	.7656
717	.8176	.5205	.2233	.9262	.6291	.3319	.0348	.7377	.1434	.5491	.9549	.3606	.7663
425720	69.8181	71.5210	73.2238	74.9267	76.6296	78.3325	80.0354	81.7382	85.1440	88.5498	91.9555	95.3613	98.7670
723	.8186	.5215	.2244	.9272	.6301	.3330	.0359	.7388	.1446	.5504	.9562	.3620	.7677
726	.8191	.5220	.2249	.9278	.6307	.3336	.0365	.7394	.1452	.5510	.9568	.3626	.7684
729	.8196	.5225	.2254	.9283	.6312	.3341	.0371	.7400	.1458	.5516	.9575	.3633	.7691
732	.8200	.5230	.2259	.9288	.6318	.3347	.0376	.7405	.1464	.5523	.9581	.3640	.7698
425735	69.8205	71.5235	73.2264	74.9294	76.6323	78.3352	80.0382	81.7411	85.1470	88.5529	91.9588	95.3646	98.7705
738	.8210	.5240	.2269	.9299	.6328	.3358	.0387	.7417	.1476	.5535	.9594	.3653	.7712
741	.8215	.5245	.2275	.9304	.6334	.3363	.0393	.7423	.1482	.5541	.9601	.3660	.7719
744	.8220	.5250	.2280	.9309	.6339	.3369	.0399	.7428	.1488	.5548	.9607	.3667	.7726
747	.8225	.5255	.2285	.9315	.6345	.3374	.0404	.7434	.1494	.5554	.9614	.3673	.7733
425750	69.8230	71.5260	73.2290	74.9320	76.6350	78.3380	80.0410	81.7440	85.1500	88.5560	91.9620	95.3680	98.7740
753	.8235	.5265	.2295	.9325	.6355	.3386	.0416	.7446	.1506	.5566	.9626	.3687	.7747
756	.8240	.5270	.2300	.9331	.6361	.3391	.0421	.7452	.1512	.5572	.9633	.3693	.7754
759	.8245	.5275	.2305	.9336	.6366	.3397	.0427	.7457	.1518	.5579	.9639	.3700	.7761
762	.8250	.5280	.2311	.9341	.6372	.3402	.0433	.7463	.1524	.5585	.9646	.3707	.7768
425765	69.8255	71.5285	73.2316	74.9346	76.6377	78.3408	80.0438	81.7469	85.1530	88.5591	91.9652	95.3714	98.7775
768	.8260	.5290	.2321	.9352	.6382	.3413	.0444	.7475	.1536	.5597	.9659	.3720	.7782
771	.8264	.5295	.2326	.9357	.6388	.3419	.0449	.7480	.1542	.5604	.9665	.3727	.7789
774	.8269	.5300	.2331	.9362	.6393	.3424	.0455	.7486	.1548	.5610	.9672	.3734	.7796
777	.8274	.5305	.2336	.9368	.6399	.3430	.0461	.7492	.1554	.5616	.9678	.3740	.7803
425780	69.8279	71.5310	73.2342	74.9373	76.6404	78.3435	80.0466	81.7498	85.1560	88.5622	91.9685	95.3747	98.7810
783	.8284	.5315	.2347	.9378	.6409	.3441	.0472	.7503	.1566	.5629	.9691	.3754	.7817
786	.8289	.5320	.2352	.9383	.6415	.3446	.0478	.7509	.1572	.5635	.9698	.3761	.7824
789	.8294	.5326	.2357	.9389	.6420	.3452	.0483	.7515	.1578	.5641	.9704	.3767	.7830
792	.8299	.5331	.2362	.9394	.6426	.3457	.0489	.7521	.1584	.5647	.9711	.3774	.7837
425795	69.8304	71.5336	73.2367	74.9399	76.6431	78.3463	80.0495	81.7526	85.1590	88.5654	91.9717	95.3781	98.7844
798	.8309	.5341	.2373	.9404	.6436	.3468	.0500	.7532	.1596	.5660	.9724	.3788	.7851
801	.8314	.5346	.2378	.9410	.6442	.3474	.0506	.7538	.1602	.5666	.9730	.3794	.7858
804	.8319	.5351	.2383	.9415	.6447	.3479	.0512	.7544	.1608	.5672	.9737	.3801	.7865
807	.8323	.5356	.2388	.9420	.6453	.3485	.0517	.7549	.1614	.5679	.9743	.3808	.7872
425810	69.8328	71.5361	73.2393	74.9426	76.6458	78.3490	80.0523	81.7555	85.1620	88.5685	91.9750	95.3814	98.7879
813	.8333	.5366	.2398	.9431	.6463	.3496	.0528	.7561	.1626	.5691	.9756	.3821	.7886
816	.8338	.5371	.2404	.9436	.6469	.3501	.0534	.7567	.1632	.5697	.9763	.3828	.7893
819	.8343	.5376	.2409	.9441	.6474	.3507	.0540	.7572	.1638	.5704	.9769	.3835	.7900
822	.8348	.5381	.2414	.9447	.6480	.3512	.0545	.7578	.1644	.5710	.9776	.3841	.7907
425825	69.8353	71.5386	73.2419	74.9452	76.6485	78.3518	80.0551	81.7584	85.1650	88.5716	91.9782	95.3848	98.7914
828	.8358	.5391	.2424	.9457	.6490	.3524	.0557	.7590	.1656	.5722	.9788	.3855	.7921
831	.8363	.5396	.2429	.9463	.6496	.3529	.0562	.7596	.1662	.5728	.9795	.3861	.7928
834	.8368	.5401	.2434	.9468	.6501	.3535	.0568	.7601	.1668	.5735	.9801	.3868	.7935
837	.8373	.5406	.2440	.9473	.6507	.3540	.0574	.7607	.1674	.5741	.9808	.3875	.7942
425840	69.8378	71.5411	73.2445	74.9478	76.6512	78.3546	80.0579	81.7613	85.1680	88.5747	91.9814	95.3882	98.7949
843	.8383	.5416	.2450	.9484	.6517	.3551	.0585	.7619	.1686	.5753	.9821	.3888	.7956
846	.8387	.5421	.2455	.9489	.6523	.3557	.0590	.7624	.1692	.5760	.9827	.3895	.7963
849	.8392	.5426	.2460	.9494	.6528	.3562	.0596	.7630	.1698	.5766	.9834	.3902	.7970
852	.8397	.5431	.2465	.9500	.6534	.3568	.0602	.7636	.1704	.5772	.9840	.3908	.7977
425855	69.8402	71.5436	73.2471	74.9505	76.6539	78.3573	80.0607	81.7642	85.1710	88.5778	91.9847	95.3915	98.7984
858	.8407	.5441	.2476	.9510	.6544	.3579	.0613	.7647	.1716	.5785	.9853	.3922	.7991
861	.8412	.5446	.2481	.9515	.6550	.3584	.0619	.7653	.1722	.5791	.9860	.3929	.7998
864	.8417	.5452	.2486	.9521	.6555	.3590	.0624	.7659	.1728	.5797	.9866	.3935	.8004
867	.8422	.5457	.2491	.9526	.6561	.3595	.0630	.7665	.1734	.5803	.9873	.3942	.8011
425870	69.8427	71.5462	73.2496	74.9531	76.6566	78.3601	80.0636	81.7670	85.1740	88.5810	91.9879	95.3949	98.8018
873	.8432	.5467	.2502	.9536	.6571	.3606	.0641	.7676	.1746	.5816	.9886	.3956	.8025
876	.8437	.5472	.2507	.9542	.6577	.3612	.0647	.7682	.1752	.5822	.9892	.3962	.8032
879	.8442	.5477	.2512	.9547	.6582	.3617	.0653	.7688	.1758	.5828	.9899	.3969	.8039
882	.8446	.5482	.2517	.9552	.6588	.3623	.0658	.7693	.1764	.5835	.9905	.3976	.8046
425885	69.8451	71.5487	73.2522	74.9558	76.6593	78.3628	80.0664	81.7699	85.1770	88.5841	91.9912	95.3982	98.8053
888	.8456	.5492	.2527	.9563	.6598	.3634	.0669	.7705	.1776	.5847	.9918	.3989	.8060
891	.8461	.5497	.2533	.9568	.6604	.3639	.0675	.7711	.1782	.5853	.9925	.3996	.8067
894	.8466	.5502	.2538	.9573	.6609	.3645	.0681	.7716	.1788	.5860	.9931	.4003	.8074
897	.8471	.5507	.2543	.9579	.6615	.3650	.0686	.7722	.1794	.5866	.9938	.4009	.8081
425900	69.8476	71.5512	73.2548	74.9584	76.6620	78.3656	80.0692	81.7728	85.1800	88.5872	91.9944	95.4016	98.8088

HARMONICS

BASIC FREQ.	112	116	120	124	128	132	136	140	144	148	152	156	160
425900	47.7008	49.4044	51.1080	52.8116	54.5152	56.2188	57.9224	59.6260	61.3296	63.0332	64.7368	66.4404	68.1440
903	.7011	.4047	.1084	.8120	.5156	.2192	.9228	.6264	.3300	.0336	.7373	.4409	.1445
906	.7015	.4051	.1087	.8123	.5160	.2196	.9232	.6268	.3305	.0341	.7377	.4413	.1450
909	.7018	.4054	.1091	.8127	.5164	.2200	.9236	.6273	.3309	.0345	.7382	.4418	.1454
912	.7021	.4058	.1094	.8131	.5167	.2204	.9240	.6277	.3313	.0350	.7386	.4423	.1459
425915	47.7025	49.4061	51.1098	52.8135	54.5171	56.2208	57.9244	59.6281	61.3318	63.0354	64.7391	66.4427	68.1464
918	.7028	.4065	.1102	.8138	.5175	.2212	.9248	.6285	.3322	.0359	.7395	.4432	.1469
921	.7032	.4068	.1105	.8142	.5179	.2216	.9253	.6289	.3326	.0363	.7400	.4437	.1474
924	.7035	.4072	.1109	.8146	.5183	.2220	.9257	.6294	.3331	.0368	.7404	.4441	.1478
927	.7038	.4075	.1112	.8149	.5187	.2224	.9261	.6298	.3335	.0372	.7409	.4446	.1483
425930	47.7042	49.4079	51.1116	52.8153	54.5190	56.2228	57.9265	59.6302	61.3339	63.0376	64.7414	66.4451	68.1488
933	.7045	.4082	.1120	.8157	.5194	.2232	.9269	.6306	.3344	.0381	.7418	.4455	.1493
936	.7048	.4086	.1123	.8161	.5198	.2236	.9273	.6310	.3348	.0385	.7423	.4460	.1498
939	.7052	.4089	.1127	.8164	.5202	.2239	.9277	.6315	.3352	.0390	.7427	.4465	.1502
942	.7055	.4093	.1130	.8168	.5206	.2243	.9281	.6319	.3356	.0394	.7432	.4470	.1507
425945	47.7058	49.4096	51.1134	52.8172	54.5210	56.2247	57.9285	59.6323	61.3361	63.0399	64.7436	66.4474	68.1512
948	.7062	.4100	.1138	.8176	.5213	.2251	.9289	.6327	.3365	.0403	.7441	.4479	.1517
951	.7065	.4103	.1141	.8179	.5217	.2255	.9293	.6331	.3369	.0407	.7446	.4484	.1522
954	.7068	.4107	.1145	.8183	.5221	.2259	.9297	.6336	.3374	.0412	.7450	.4488	.1526
957	.7072	.4110	.1148	.8187	.5225	.2263	.9302	.6340	.3378	.0416	.7455	.4493	.1531
425960	47.7075	49.4114	51.1152	52.8190	54.5229	56.2267	57.9306	59.6344	61.3382	63.0421	64.7459	66.4498	68.1536
963	.7079	.4117	.1156	.8194	.5233	.2271	.9310	.6348	.3387	.0425	.7464	.4502	.1541
966	.7082	.4121	.1159	.8198	.5236	.2275	.9314	.6352	.3391	.0430	.7468	.4507	.1546
969	.7085	.4124	.1163	.8202	.5240	.2279	.9318	.6357	.3395	.0434	.7473	.4512	.1550
972	.7089	.4128	.1166	.8205	.5244	.2283	.9322	.6361	.3400	.0439	.7477	.4516	.1555
425975	47.7092	49.4131	51.1170	52.8209	54.5248	56.2287	57.9326	59.6365	61.3404	63.0443	64.7482	66.4521	68.1560
978	.7095	.4134	.1174	.8213	.5252	.2291	.9330	.6369	.3408	.0447	.7487	.4526	.1565
981	.7099	.4138	.1177	.8216	.5256	.2295	.9334	.6373	.3413	.0452	.7491	.4530	.1570
984	.7102	.4141	.1181	.8220	.5260	.2299	.9338	.6378	.3417	.0456	.7496	.4535	.1574
987	.7105	.4145	.1184	.8224	.5263	.2303	.9342	.6382	.3421	.0461	.7500	.4540	.1579
425990	47.7109	49.4148	51.1188	52.8228	54.5267	56.2307	57.9346	59.6386	61.3426	63.0465	64.7505	66.4544	68.1584
993	.7112	.4152	.1192	.8231	.5271	.2311	.9350	.6390	.3430	.0470	.7509	.4549	.1589
996	.7116	.4155	.1195	.8235	.5275	.2315	.9355	.6394	.3434	.0474	.7514	.4554	.1594
999	.7119	.4159	.1199	.8239	.5279	.2319	.9359	.6399	.3439	.0479	.7518	.4558	.1598
426002	.7122	.4162	.1202	.8242	.5283	.2323	.9363	.6403	.3443	.0483	.7523	.4563	.1603
426005	47.7126	49.4166	51.1206	52.8246	54.5286	56.2327	57.9367	59.6407	61.3447	63.0487	64.7528	66.4568	68.1608
008	.7129	.4169	.1210	.8250	.5290	.2331	.9371	.6411	.3452	.0492	.7532	.4572	.1613
011	.7132	.4173	.1213	.8254	.5294	.2335	.9375	.6415	.3456	.0496	.7537	.4577	.1618
014	.7136	.4176	.1217	.8257	.5298	.2338	.9379	.6420	.3460	.0501	.7541	.4582	.1622
017	.7139	.4180	.1220	.8261	.5302	.2342	.9383	.6424	.3464	.0505	.7546	.4587	.1627
426020	47.7142	49.4183	51.1224	52.8265	54.5306	56.2346	57.9387	59.6428	61.3469	63.0510	64.7550	66.4591	68.1632
023	.7146	.4187	.1228	.8269	.5309	.2350	.9391	.6432	.3473	.0514	.7555	.4596	.1637
026	.7149	.4190	.1231	.8272	.5313	.2354	.9395	.6436	.3477	.0518	.7560	.4601	.1642
029	.7152	.4194	.1235	.8276	.5317	.2358	.9399	.6441	.3482	.0523	.7564	.4605	.1646
032	.7156	.4197	.1238	.8280	.5321	.2362	.9404	.6445	.3486	.0527	.7569	.4610	.1651
426035	47.7159	49.4201	51.1242	52.8283	54.5325	56.2366	57.9408	59.6449	61.3490	63.0532	64.7573	66.4615	68.1656
038	.7163	.4204	.1246	.8287	.5329	.2370	.9412	.6453	.3495	.0536	.7578	.4619	.1661
041	.7166	.4208	.1249	.8291	.5332	.2374	.9416	.6457	.3499	.0541	.7582	.4624	.1666
044	.7169	.4211	.1253	.8295	.5336	.2378	.9420	.6462	.3503	.0545	.7587	.4629	.1670
047	.7173	.4215	.1256	.8298	.5340	.2382	.9424	.6466	.3508	.0550	.7591	.4633	.1675
426050	47.7176	49.4218	51.1260	52.8302	54.5344	56.2386	57.9428	59.6470	61.3512	63.0554	64.7596	66.4638	68.1680
053	.7179	.4221	.1264	.8306	.5348	.2390	.9432	.6474	.3516	.0558	.7601	.4643	.1685
056	.7183	.4225	.1267	.8309	.5352	.2394	.9436	.6478	.3521	.0563	.7605	.4647	.1690
059	.7186	.4228	.1271	.8313	.5356	.2398	.9440	.6483	.3525	.0567	.7610	.4652	.1694
062	.7189	.4232	.1274	.8317	.5359	.2402	.9444	.6487	.3529	.0572	.7614	.4657	.1699
426065	47.7193	49.4235	51.1278	52.8321	54.5363	56.2406	57.9448	59.6491	61.3534	63.0576	64.7619	66.4661	68.1704
068	.7196	.4239	.1282	.8324	.5367	.2410	.9452	.6495	.3538	.0581	.7623	.4666	.1709
071	.7200	.4242	.1285	.8328	.5371	.2414	.9457	.6499	.3542	.0585	.7628	.4671	.1714
074	.7203	.4246	.1289	.8332	.5375	.2418	.9461	.6504	.3547	.0590	.7632	.4675	.1718
077	.7206	.4249	.1292	.8335	.5379	.2422	.9465	.6508	.3551	.0594	.7637	.4680	.1723
426080	47.7210	49.4253	51.1296	52.8339	54.5382	56.2426	57.9469	59.6512	61.3555	63.0598	64.7642	66.4685	68.1728
083	.7213	.4256	.1300	.8343	.5386	.2430	.9473	.6516	.3560	.0603	.7646	.4689	.1733
086	.7216	.4260	.1303	.8347	.5390	.2434	.9477	.6520	.3564	.0607	.7651	.4694	.1738
089	.7220	.4263	.1307	.8350	.5394	.2437	.9481	.6525	.3568	.0612	.7655	.4699	.1742
092	.7223	.4267	.1310	.8354	.5398	.2441	.9485	.6529	.3572	.0616	.7660	.4704	.1747
426095	47.7226	49.4270	51.1314	52.8358	54.5402	56.2445	57.9489	59.6533	61.3577	63.0621	64.7664	66.4708	68.1752
098	.7230	.4274	.1318	.8362	.5405	.2449	.9493	.6537	.3581	.0625	.7669	.4713	.1757
101	.7233	.4277	.1321	.8365	.5409	.2453	.9497	.6541	.3585	.0629	.7674	.4718	.1762
104	.7236	.4281	.1325	.8369	.5413	.2457	.9501	.6546	.3590	.0634	.7678	.4722	.1766
107	.7240	.4284	.1328	.8373	.5417	.2461	.9506	.6550	.3594	.0638	.7683	.4727	.1771
426110	47.7243	49.4288	51.1332	52.8376	54.5421	56.2465	57.9510	59.6554	61.3598	63.0643	64.7687	66.4732	68.1776
113	.7247	.4291	.1336	.8380	.5425	.2469	.9514	.6558	.3603	.0647	.7692	.4736	.1781
116	.7250	.4295	.1339	.8384	.5428	.2473	.9518	.6562	.3607	.0652	.7696	.4741	.1786
119	.7253	.4298	.1343	.8388	.5432	.2477	.9522	.6567	.3611	.0656	.7701	.4746	.1790
122	.7257	.4302	.1346	.8391	.5436	.2481	.9526	.6571	.3616	.0661	.7705	.4750	.1795
426125	47.7260	49.4305	51.1350	52.8395	54.5440	56.2485	57.9530	59.6575	61.3620	63.0665	64.7710	66.4755	68.1800
128	.7263	.4308	.1354	.8399	.5444	.2489	.9534	.6579	.3624	.0669	.7715	.4760	.1805
131	.7267	.4312	.1357	.8402	.5448	.2493	.9538	.6583	.3629	.0674	.7719	.4764	.1810
134	.7270	.4315	.1361	.8406	.5452	.2497	.9542	.6588	.3633	.0678	.7724	.4769	.1814
137	.7273	.4319	.1364	.8410	.5455	.2501	.9546	.6592	.3637	.0683	.7728	.4774	.1819
426140	47.7277	49.4322	51.1368	52.8414	54.5459	56.2505	57.9550	59.6596	61.3642	63.0687	64.7733	66.4778	68.1824
143	.7280	.4326	.1372	.8417	.5463	.2509	.9554	.6600	.3646	.0692	.7737	.4783	.1829
146	.7284	.4329	.1375	.8421	.5467	.2513	.9559	.6604	.3650	.0696	.7742	.4788	.1834
149	.7287	.4333	.1379	.8425	.5471	.2517	.9563	.6609	.3655	.0701	.7746	.4792	.1838
152	.7290	.4336	.1382	.8428	.5475	.2521	.9567	.6613	.3659	.0705	.7751	.4797	.1843
426155	47.7294	49.4340	51.1386	52.8432	54.5478	56.2525	57.9571	59.6617	61.3663	63.0709	64.7756	66.4802	68.1848
158	.7297	.4343	.1390	.8436	.5482	.2529	.9575	.6621	.3668	.0714	.7760	.4806	.1853
161	.7300	.4347	.1393	.8440	.5486	.2533	.9579	.6625	.3672	.0718	.7765	.4811	.1858
164	.7304	.4350	.1397	.8443	.5490	.2536	.9583	.6630	.3676	.0723	.7769	.4816	.1862
167	.7307	.4354	.1400	.8447	.5494	.2540	.9587	.6634	.3680	.0727	.7774	.4821	.1867
426170	47.7310	49.4357	51.1404	52.8451	54.5498	56.2544	57.9591	59.6638	61.3685	63.0732	64.7778	66.4825	68.1872
173	.7314	.4361	.1408	.8455	.5501	.2548	.9595	.6642	.3689	.0736	.7783	.4830	.1877
176	.7317	.4364	.1411	.8458	.5505	.2552	.9599	.6646	.3693	.0740	.7788	.4835	.1882
179	.7320	.4368	.1415	.8462	.5509	.2556	.9603	.6651	.3698	.0745	.7792	.4839	.1886
182	.7324	.4371	.1418	.8466	.5513	.2560	.9608	.6655	.3702	.0749	.7797	.4844	.1891
426185	47.7327	49.4375	51.1422	52.8469	54.5517	56.2564	57.9612	59.6659	61.3706	63.0754	64.7801	66.4849	68.1896
188	.7331	.4378	.1426	.8473	.5521	.2568	.9616	.6663	.3711	.0758	.7806	.4853	.1901
191	.7334	.4382	.1429	.8477	.5524	.2572	.9620	.6667	.3715	.0763	.7810	.4858	.1906
194	.7337	.4385	.1433	.8481	.5528	.2576	.9624	.6672	.3719	.0767	.7815	.4863	.1910
197	.7341	.4389	.1436	.8484	.5532	.2580	.9628	.6676	.3724	.0772	.7819	.4867	.1915
426200	47.7344	49.4392	51.1440	52.8488	54.5536	56.2584	57.9632	59.6680	61.3728	63.0776	64.7824	66.4872	68.1920

MEGACYCLES PER SECOND

HARMONICS

BASIC FREQ.	164	168	172	176	180	184	188	192	200	208	216	224	232
425900	69.8476	71.5512	73.2548	74.9584	76.6620	78.3656	80.0692	81.7728	85.1800	88.5872	91.9944	95.4016	98.8088
903	.8481	.5517	.2553	.9589	.6625	.3662	.0698	.7734	.1806	.5878	.9950	.4023	.8095
906	.8486	.5522	.2558	.9595	.6631	.3667	.0703	.7740	.1812	.5884	.9957	.4029	.8102
906	.8491	.5527	.2563	.9600	.6636	.3673	.0709	.7745	.1818	.5891	.9963	.4036	.8109
912	.8496	.5532	.2569	.9605	.6642	.3678	.0715	.7751	.1824	.5897	.9970	.4043	.8116
425915	69.8501	71.5537	73.2574	74.9610	76.6647	78.3684	80.0720	81.7757	85.1830	88.5903	91.9976	95.4050	98.8123
918	.8506	.5542	.2579	.9616	.6652	.3689	.0726	.7763	.1836	.5909	.9983	.4056	.8130
921	.8510	.5547	.2584	.9621	.6658	.3695	.0731	.7768	.1842	.5916	.9989	.4063	.8137
924	.8515	.5552	.2589	.9626	.6663	.3700	.0737	.7774	.1848	.5922	.9996	.4070	.8144
927	.8520	.5557	.2594	.9632	.6669	.3706	.0743	.7780	.1854	.5928	92.0002	.4076	.8151
425930	69.8525	71.5562	73.2600	74.9637	76.6674	78.3711	80.0748	81.7786	85.1860	88.5934	92.0009	95.4083	98.8158
933	.8530	.5567	.2605	.9642	.6679	.3717	.0754	.7791	.1866	.5941	.0015	.4090	.8165
936	.8535	.5572	.2610	.9647	.6685	.3722	.0760	.7797	.1872	.5947	.0022	.4097	.8172
939	.8540	.5578	.2615	.9653	.6690	.3728	.0765	.7803	.1878	.5953	.0028	.4103	.8178
942	.8545	.5583	.2620	.9658	.6696	.3733	.0771	.7809	.1884	.5959	.0035	.4110	.8185
425945	69.8550	71.5588	73.2625	74.9663	76.6701	78.3739	80.0777	81.7814	85.1890	88.5966	92.0041	95.4117	98.8192
948	.8555	.5593	.2631	.9668	.6706	.3744	.0782	.7820	.1896	.5972	.0048	.4124	.8199
951	.8560	.5598	.2636	.9674	.6712	.3750	.0788	.7826	.1902	.5978	.0054	.4130	.8206
954	.8565	.5603	.2641	.9679	.6717	.3755	.0794	.7832	.1908	.5984	.0061	.4137	.8213
957	.8569	.5608	.2646	.9684	.6723	.3761	.0799	.7837	.1914	.5991	.0067	.4144	.8220
425960	69.8574	71.5613	73.2651	74.9690	76.6728	78.3766	80.0805	81.7843	85.1920	88.5997	92.0074	95.4150	98.8227
963	.8579	.5618	.2656	.9695	.6733	.3772	.0810	.7849	.1926	.6003	.0080	.4157	.8234
966	.8584	.5623	.2662	.9700	.6739	.3777	.0816	.7855	.1932	.6009	.0087	.4164	.8241
969	.8589	.5628	.2667	.9705	.6744	.3783	.0822	.7860	.1938	.6016	.0093	.4171	.8248
972	.8594	.5633	.2672	.9711	.6750	.3788	.0827	.7866	.1944	.6022	.0100	.4177	.8255
425975	69.8599	71.5638	73.2677	74.9716	76.6755	78.3794	80.0833	81.7872	85.1950	88.6028	92.0106	95.4184	98.8262
978	.8604	.5643	.2682	.9721	.6760	.3800	.0839	.7878	.1956	.6034	.0112	.4191	.8269
981	.8609	.5648	.2687	.9727	.6766	.3805	.0844	.7884	.1962	.6040	.0119	.4197	.8276
984	.8614	.5653	.2692	.9732	.6771	.3811	.0850	.7889	.1968	.6047	.0125	.4204	.8283
987	.8619	.5658	.2698	.9737	.6777	.3816	.0856	.7895	.1974	.6053	.0132	.4211	.8290
425990	69.8624	71.5663	73.2703	74.9742	76.6782	78.3822	80.0861	81.7901	85.1980	88.6059	92.0138	95.4218	98.8297
993	.8629	.5668	.2708	.9748	.6787	.3827	.0867	.7907	.1986	.6065	.0145	.4224	.8304
996	.8633	.5673	.2713	.9753	.6793	.3833	.0872	.7912	.1992	.6072	.0151	.4231	.8311
999	.8638	.5678	.2718	.9758	.6798	.3838	.0878	.7918	.1998	.6078	.0158	.4238	.8318
426002	.8643	.5683	.2723	.9764	.6804	.3844	.0884	.7924	.2004	.6084	.0164	.4244	.8325
426005	69.8648	71.5688	73.2729	74.9769	76.6809	78.3849	80.0889	81.7930	85.2010	88.6090	92.0171	95.4251	98.8332
008	.8653	.5693	.2734	.9774	.6814	.3855	.0895	.7935	.2016	.6097	.0177	.4258	.8339
011	.8658	.5698	.2739	.9779	.6820	.3860	.0901	.7941	.2022	.6103	.0184	.4265	.8346
014	.8663	.5704	.2744	.9785	.6825	.3866	.0906	.7947	.2028	.6109	.0190	.4271	.8352
017	.8668	.5709	.2749	.9790	.6831	.3871	.0912	.7953	.2034	.6115	.0197	.4278	.8359
426020	69.8673	71.5714	73.2754	74.9795	76.6836	78.3877	80.0918	81.7958	85.2040	88.6122	92.0203	95.4285	98.8366
023	.8678	.5719	.2760	.9800	.6841	.3882	.0923	.7964	.2046	.6128	.0210	.4292	.8373
026	.8683	.5724	.2765	.9806	.6847	.3888	.0929	.7970	.2052	.6134	.0216	.4298	.8380
029	.8688	.5729	.2770	.9811	.6852	.3893	.0935	.7976	.2058	.6140	.0223	.4305	.8387
032	.8692	.5734	.2775	.9816	.6858	.3899	.0940	.7981	.2064	.6147	.0229	.4312	.8394
426035	69.8697	71.5739	73.2780	74.9822	76.6863	78.3904	80.0946	81.7987	85.2070	88.6153	92.0236	95.4318	98.8401
038	.8702	.5744	.2785	.9827	.6868	.3910	.0951	.7993	.2076	.6159	.0242	.4325	.8408
041	.8707	.5749	.2791	.9832	.6874	.3915	.0957	.7999	.2082	.6165	.0249	.4332	.8415
044	.8712	.5754	.2796	.9837	.6879	.3921	.0963	.8004	.2088	.6172	.0255	.4339	.8422
047	.8717	.5759	.2801	.9843	.6885	.3926	.0968	.8010	.2094	.6178	.0262	.4345	.8429
426050	69.8722	71.5764	73.2806	74.9848	76.6890	78.3932	80.0974	81.8016	85.2100	88.6184	92.0268	95.4352	98.8436
053	.8727	.5769	.2811	.9853	.6895	.3938	.0980	.8022	.2106	.6190	.0274	.4359	.8443
056	.8732	.5774	.2816	.9859	.6901	.3943	.0985	.8028	.2112	.6196	.0281	.4365	.8450
059	.8737	.5779	.2821	.9864	.6906	.3949	.0991	.8033	.2118	.6203	.0287	.4372	.8457
062	.8742	.5784	.2827	.9869	.6912	.3954	.0997	.8039	.2124	.6209	.0294	.4379	.8464
426065	69.8747	71.5789	73.2832	74.9874	76.6917	78.3960	80.1002	81.8045	85.2130	88.6215	92.0300	95.4386	98.8471
068	.8752	.5794	.2837	.9880	.6922	.3965	.1008	.8051	.2136	.6221	.0307	.4392	.8478
071	.8756	.5799	.2842	.9885	.6928	.3971	.1013	.8056	.2142	.6228	.0313	.4399	.8485
074	.8761	.5804	.2847	.9890	.6933	.3976	.1019	.8062	.2148	.6234	.0320	.4406	.8492
077	.8766	.5809	.2852	.9896	.6939	.3982	.1025	.8068	.2154	.6240	.0326	.4412	.8499
426080	69.8771	71.5814	73.2858	74.9901	76.6944	78.3987	80.1030	81.8074	85.2160	88.6246	92.0333	95.4419	98.8506
083	.8776	.5819	.2863	.9906	.6949	.3993	.1036	.8079	.2166	.6253	.0339	.4426	.8513
086	.8781	.5824	.2868	.9911	.6955	.3998	.1042	.8085	.2172	.6259	.0346	.4433	.8520
089	.8786	.5830	.2873	.9917	.6960	.4004	.1047	.8091	.2178	.6265	.0352	.4439	.8526
092	.8791	.5835	.2878	.9922	.6966	.4009	.1053	.8097	.2184	.6271	.0359	.4446	.8533
426095	69.8796	71.5840	73.2883	74.9927	76.6971	78.4015	80.1059	81.8102	85.2190	88.6278	92.0365	95.4453	98.8540
098	.8801	.5845	.2889	.9932	.6976	.4020	.1064	.8108	.2196	.6284	.0372	.4460	.8547
101	.8806	.5850	.2894	.9938	.6982	.4026	.1070	.8114	.2202	.6290	.0378	.4466	.8554
104	.8811	.5855	.2899	.9943	.6987	.4031	.1076	.8120	.2208	.6296	.0385	.4473	.8561
107	.8815	.5860	.2904	.9948	.6993	.4037	.1081	.8125	.2214	.6303	.0391	.4480	.8568
426110	69.8820	71.5865	73.2909	74.9954	76.6998	78.4042	80.1087	81.8131	85.2220	88.6309	92.0398	95.4486	98.8575
113	.8825	.5870	.2914	.9959	.7003	.4048	.1092	.8137	.2226	.6315	.0404	.4493	.8582
116	.8830	.5875	.2920	.9964	.7009	.4053	.1098	.8143	.2232	.6321	.0411	.4500	.8589
119	.8835	.5880	.2925	.9969	.7014	.4059	.1104	.8148	.2238	.6328	.0417	.4507	.8596
122	.8840	.5885	.2930	.9975	.7020	.4064	.1109	.8154	.2244	.6334	.0424	.4513	.8603
426125	69.8845	71.5890	73.2935	74.9980	76.7025	78.4070	80.1115	81.8160	85.2250	88.6340	92.0430	95.4520	98.8610
128	.8850	.5895	.2940	.9985	.7030	.4076	.1121	.8166	.2256	.6346	.0436	.4527	.8617
131	.8855	.5900	.2945	.9991	.7036	.4081	.1126	.8172	.2262	.6352	.0443	.4533	.8624
134	.8860	.5905	.2950	.9996	.7041	.4087	.1132	.8177	.2268	.6359	.0449	.4540	.8631
137	.8865	.5910	.2956	75.0001	.7047	.4092	.1138	.8183	.2274	.6365	.0456	.4547	.8638
426140	69.8870	71.5915	73.2961	75.0006	76.7052	78.4098	80.1143	81.8189	85.2280	88.6371	92.0462	95.4554	98.8645
143	.8875	.5920	.2966	.0012	.7057	.4103	.1149	.8195	.2286	.6377	.0469	.4560	.8652
146	.8879	.5925	.2971	.0017	.7063	.4109	.1154	.8200	.2292	.6384	.0475	.4567	.8659
149	.8884	.5930	.2976	.0022	.7068	.4114	.1160	.8206	.2298	.6390	.0482	.4574	.8666
152	.8889	.5935	.2981	.0028	.7074	.4120	.1166	.8212	.2304	.6396	.0488	.4580	.8673
426155	69.8894	71.5940	73.2987	75.0033	76.7079	78.4125	80.1171	81.8218	85.2310	88.6402	92.0495	95.4587	98.8680
158	.8899	.5945	.2992	.0038	.7084	.4131	.1177	.8223	.2316	.6409	.0501	.4594	.8687
161	.8904	.5950	.2997	.0043	.7090	.4136	.1183	.8229	.2322	.6415	.0508	.4601	.8694
164	.8909	.5956	.3002	.0049	.7095	.4142	.1188	.8235	.2328	.6421	.0514	.4607	.8700
167	.8914	.5961	.3007	.0054	.7101	.4147	.1194	.8241	.2334	.6427	.0521	.4614	.8707
426170	69.8919	71.5966	73.3012	75.0059	76.7106	78.4153	80.1200	81.8246	85.2340	88.6434	92.0527	95.4621	98.8714
173	.8924	.5971	.3018	.0064	.7111	.4158	.1205	.8252	.2346	.6440	.0534	.4628	.8721
176	.8929	.5976	.3023	.0070	.7117	.4164	.1211	.8258	.2352	.6446	.0540	.4634	.8728
179	.8934	.5981	.3028	.0075	.7122	.4169	.1217	.8264	.2358	.6452	.0547	.4641	.8735
182	.8938	.5986	.3033	.0080	.7128	.4175	.1222	.8269	.2364	.6459	.0553	.4648	.8742
426185	69.8943	71.5991	73.3038	75.0086	76.7133	78.4180	80.1228	81.8275	85.2370	88.6465	92.0560	95.4654	98.8749
188	.8948	.5996	.3043	.0091	.7138	.4186	.1233	.8281	.2376	.6471	.0566	.4661	.8756
191	.8953	.6001	.3049	.0096	.7144	.4191	.1239	.8287	.2382	.6477	.0573	.4668	.8763
194	.8958	.6006	.3054	.0101	.7149	.4197	.1245	.8292	.2388	.6484	.0579	.4675	.8770
197	.8963	.6011	.3059	.0107	.7155	.4202	.1250	.8298	.2394	.6490	.0586	.4681	.8777
426200	69.8968	71.6016	73.3064	75.0112	76.7160	78.4208	80.1256	81.8304	85.2400	88.6496	92.0592	95.4688	98.8784

MEGACYCLES PER SECOND

HARMONICS

BASIC FREQ.	112	116	120	124	128	132	136	140	144	148	152	156	160
426200	47.7344	49.4392	51.1440	52.8488	54.5536	56.2584	57.9632	59.6680	61.3728	63.0776	64.7824	66.4872	68.1920
203	.7347	.4395	.1444	.8492	.5540	.2588	.9636	.6684	.3732	.0780	.7829	.4877	.1925
206	.7351	.4399	.1447	.8495	.5544	.2592	.9640	.6688	.3737	.0785	.7833	.4881	.1930
209	.7354	.4402	.1451	.8499	.5548	.2596	.9644	.6693	.3741	.0789	.7838	.4886	.1934
212	.7357	.4406	.1454	.8503	.5551	.2600	.9648	.6697	.3745	.0794	.7842	.4891	.1939
426215	47.7361	49.4409	51.1458	52.8507	54.5555	56.2604	57.9652	59.6701	61.3750	63.0798	64.7847	66.4895	68.1944
218	.7364	.4413	.1462	.8510	.5559	.2608	.9656	.6705	.3754	.0803	.7851	.4900	.1949
221	.7368	.4416	.1465	.8514	.5563	.2612	.9661	.6709	.3758	.0807	.7856	.4905	.1954
224	.7371	.4420	.1469	.8518	.5567	.2616	.9665	.6714	.3763	.0812	.7860	.4909	.1958
227	.7374	.4423	.1472	.8521	.5571	.2620	.9669	.6718	.3767	.0816	.7865	.4914	.1963
426230	47.7378	49.4427	51.1476	52.8525	54.5574	56.2624	57.9673	59.6722	61.3771	63.0820	64.7870	66.4919	68.1968
233	.7381	.4430	.1480	.8529	.5578	.2628	.9677	.6726	.3776	.0825	.7874	.4923	.1973
236	.7384	.4434	.1483	.8533	.5582	.2632	.9681	.6730	.3780	.0829	.7879	.4928	.1978
239	.7388	.4437	.1487	.8536	.5586	.2635	.9685	.6735	.3784	.0834	.7883	.4933	.1982
242	.7391	.4441	.1490	.8540	.5590	.2639	.9689	.6739	.3788	.0838	.7888	.4938	.1987
426245	47.7394	49.4444	51.1494	52.8544	54.5594	56.2643	57.9693	59.6743	61.3793	63.0843	64.7892	66.4942	68.1992
248	.7398	.4448	.1498	.8548	.5597	.2647	.9697	.6747	.3797	.0847	.7897	.4947	.1997
251	.7401	.4451	.1501	.8551	.5601	.2651	.9701	.6751	.3801	.0851	.7902	.4952	.2002
254	.7404	.4455	.1505	.8555	.5605	.2655	.9705	.6756	.3806	.0856	.7906	.4956	.2006
257	.7408	.4458	.1508	.8559	.5609	.2659	.9710	.6760	.3810	.0860	.7911	.4961	.2011
426260	47.7411	49.4462	51.1512	52.8562	54.5613	56.2663	57.9714	59.6764	61.3814	63.0865	64.7915	66.4966	68.2016
263	.7415	.4465	.1516	.8566	.5617	.2667	.9718	.6768	.3819	.0869	.7920	.4970	.2021
266	.7418	.4469	.1519	.8570	.5620	.2671	.9722	.6772	.3823	.0874	.7924	.4975	.2026
269	.7421	.4472	.1523	.8574	.5624	.2675	.9726	.6777	.3827	.0878	.7929	.4980	.2030
272	.7425	.4476	.1526	.8577	.5628	.2679	.9730	.6781	.3832	.0883	.7933	.4984	.2035
426275	47.7428	49.4479	51.1530	52.8581	54.5632	57.2683	57.9734	59.6785	61.3836	63.0887	64.7938	66.4989	68.2040
278	.7431	.4482	.1534	.8585	.5636	.2687	.9738	.6789	.3840	.0891	.7943	.4994	.2045
281	.7435	.4486	.1537	.8588	.5640	.2691	.9742	.6793	.3845	.0896	.7947	.4998	.2050
284	.7438	.4489	.1541	.8592	.5644	.2695	.9746	.6798	.3849	.0900	.7952	.5003	.2054
287	.7441	.4493	.1544	.8596	.5647	.2699	.9750	.6802	.3853	.0905	.7956	.5008	.2059
426290	47.7445	49.4496	51.1548	52.8600	54.5651	56.2703	57.9754	59.6806	61.3858	62.0909	64.7961	66.5012	68.2064
293	.7448	.4500	.1552	.8603	.5655	.2707	.9758	.6810	.3862	.0914	.7965	.5017	.2069
296	.7452	.4503	.1555	.8607	.5659	.2711	.9763	.6814	.3866	.0918	.7970	.5022	.2074
299	.7455	.4507	.1559	.8611	.5663	.2715	.9767	.6819	.3871	.0923	.7974	.5026	.2078
302	.7458	.4510	.1562	.8614	.5667	.2719	.9771	.6823	.3875	.0927	.7979	.5031	.2083
426305	47.7462	49.4514	51.1566	52.8618	54.5670	56.2723	57.9775	59.6827	61.3879	63.0931	64.7984	66.5036	68.2088
308	.7465	.4517	.1570	.8622	.5674	.2727	.9779	.6831	.3884	.0936	.7988	.5040	.2093
311	.7468	.4521	.1573	.8626	.5678	.2731	.9783	.6835	.3888	.0940	.7993	.5045	.2098
314	.7472	.4524	.1577	.8629	.5682	.2734	.9787	.6840	.3892	.0945	.7997	.5050	.2102
317	.7475	.4528	.1580	.8633	.5686	.2738	.9791	.6844	.3896	.0949	.8002	.5055	.2107
426320	47.7478	49.4531	51.1584	52.8637	54.5690	56.2742	57.9795	59.6848	61.3901	63.0954	64.8006	66.5059	68.2112
323	.7482	.4535	.1588	.8641	.5693	.2746	.9799	.6852	.3905	.0958	.8011	.5064	.2117
326	.7485	.4538	.1591	.8644	.5697	.2750	.9803	.6856	.3909	.0962	.8016	.5069	.2122
329	.7488	.4542	.1595	.8648	.5701	.2754	.9807	.6861	.3914	.0967	.8020	.5073	.2126
332	.7492	.4545	.1598	.8652	.5705	.2758	.9812	.6865	.3918	.0971	.8025	.5078	.2131
426335	47.7495	49.4549	51.1602	52.8655	54.5709	56.2762	57.9816	59.6869	61.3922	63.0976	64.8029	66.5083	68.2136
338	.7499	.4552	.1606	.8659	.5713	.2766	.9820	.6873	.3927	.0980	.8034	.5087	.2141
341	.7502	.4556	.1609	.8663	.5716	.2770	.9824	.6877	.3931	.0985	.8038	.5092	.2146
344	.7505	.4559	.1613	.8667	.5720	.2774	.9828	.6882	.3935	.0989	.8043	.5097	.2150
347	.7509	.4563	.1616	.8670	.5724	.2778	.9832	.6886	.3940	.0994	.8047	.5101	2155
426350	47.7512	49.4566	51.1620	52.8674	54.5728	56.2782	57.9836	59.6890	61.3944	63.0998	64.8052	66.5106	68.2160
353	.7515	.4569	.1624	.8678	.5732	.2786	.9840	.6894	.3948	.1002	.8057	.5111	.2165
356	.7519	.4573	.1627	.8681	.5736	.2790	.9844	.6898	.3953	.1007	.8061	.5115	.2170
359	.7522	.4576	.1631	.8685	.5740	.2794	.9848	.6903	.3957	.1011	.8066	.5120	.2174
362	.7525	.4580	.1634	.8689	.5743	.2798	.9852	.6907	.3961	.1016	.8070	.5125	.2179
426365	47.7529	49.4583	51.1638	52.8693	54.5747	56.2802	57.9856	59.6911	61.3966	63.1020	64.8075	66.5129	68.2184
368	.7532	.4587	.1642	.8696	.5751	.2806	.9860	.6915	.3970	.1025	.8079	.5134	.2189
371	.7536	.4590	.1645	.8700	.5755	.2810	.9865	.6919	.3974	.1029	.8084	.5139	.2194
374	.7539	.4594	.1649	.8704	.5759	.2814	.9869	.6924	.3979	.1034	.8088	.5143	.2198
377	.7542	.4597	.1652	.8707	.5763	.2818	.9873	.6928	.3983	.1038	.8093	.5148	.2203
426380	47.7546	49.4601	51.1656	52.8711	54.5766	56.2822	57.9877	59.6932	61.3987	63.1042	64.8098	66.5153	68.2208
383	.7549	.4604	.1660	.8715	.5770	.2826	.9881	.6936	.3992	.1047	.8102	.5157	.2213
386	.7552	.4608	.1663	.8719	.5774	.2830	.9885	.6940	.3996	.1051	.8107	.5162	.2218
389	.7556	.4611	.1667	.8722	.5778	.2833	.9889	.6945	.4000	.1056	.8111	.5167	.2222
392	.7559	.4615	.1670	.8726	.5782	.2837	.9893	.6949	.4004	.1060	.8116	.5172	.2227
426395	47.7562	49.4618	51.1674	52.8730	54.5786	56.2841	57.9897	59.6953	61.4009	63.1065	64.8120	66.5176	68.2232
398	.7566	.4622	.1678	.8734	.5789	.2845	.9901	.6957	.4013	.1069	.8125	.5181	.2237
401	.7569	.4625	.1681	.8737	.5793	.2849	.9905	.6961	.4017	.1073	.8130	.5186	.2242
404	.7572	.4629	.1685	.8741	.5797	.2853	.9909	.6966	.4022	.1078	.8134	.5190	.2246
407	.7576	.4632	.1688	.8745	.5801	.2857	.9914	.6970	.4026	.1082	.8139	.5195	.2251
426410	47.7579	49.4636	51.1692	52.8748	54.5805	56.2861	57.9918	59.6974	61.4030	63.1087	64.8143	66.5200	68.2256
413	.7583	.4639	.1696	.8752	.5809	.2865	.9922	.6978	.4035	.1091	.8148	.5204	.2261
416	.7586	.4643	.1699	.8756	.5812	.2869	.9926	.6982	.4039	.1096	.8152	.5209	.2266
419	.7589	.4646	.1703	.8760	.5816	.2873	.9930	.6987	.4043	.1100	.8157	.5214	.2270
422	.7593	.4650	.1706	.8763	.5820	.2877	.9934	.6991	.4048	.1105	.8161	.5218	.2275
426425	47.7596	49.4653	51.1710	52.8767	54.5824	56.2881	57.9938	59.6995	61.4052	63.1109	64.8166	66.5223	68.2280
428	.7599	.4656	.1714	.8771	.5828	.2885	.9942	.6999	.4056	.1113	.8171	.5228	.2285
431	.7603	.4660	.1717	.8774	.5832	.2889	.9946	.7003	.4061	.1118	.8175	.5232	.2290
434	.7606	.4663	.1721	.8778	.5836	.2893	.9950	.7008	.4065	.1122	.8180	.5237	.2294
437	.7609	.4667	.1724	.8782	.5839	.2897	.9954	.7012	.4069	.1127	.8184	.5242	.2299
426440	47.7613	49.4670	51.1728	52.8786	54.5843	56.2901	57.9958	59.7016	61.4074	63.1131	64.8189	66.5246	68.2304
443	.7616	.4674	.1732	.8789	.5847	.2905	.9962	.7020	.4078	.1136	.8193	.5251	.2309
446	.7620	.4677	.1735	.8793	.5851	.2909	.9967	.7024	.4082	.1140	.8198	.5256	.2314
449	.7623	.4681	.1739	.8797	.5855	.2913	.9971	.7029	.4087	.1145	.8202	.5260	.2318
452	.7626	.4684	.1742	.8800	.5859	.2917	.9975	.7033	.4091	.1149	.8207	.5265	.2323
426455	47.7630	49.4688	51.1746	52.8804	54.5862	56.2921	57.9979	59.7037	61.4095	63.1153	64.8212	66.5270	68.2328
458	.7633	.4691	.1750	.8808	.5866	.2925	.9983	.7041	.4100	.1158	.8216	.5274	.2333
461	.7636	.4695	.1753	.8812	.5870	.2929	.9987	.7045	.4104	.1162	.8221	.5279	.2338
464	.7640	.4698	.1757	.8815	.5874	.2932	.9991	.7050	.4108	.1167	.8225	.5284	.2342
467	.7643	.4702	.1760	.8819	.5878	.2936	.9995	.7054	.4112	.1171	.8230	.5289	.2347
426470	47.7646	49.4705	51.1764	52.8823	54.5882	56.2940	57.9999	59.7058	61.4117	63.1176	64.8234	66.5293	68.2352
473	.7650	.4709	.1768	.8827	.5885	.2944	58.0003	.7062	.4121	.1180	.8239	.5298	.2357
476	.7653	.4712	.1771	.8830	.5889	.2948	.0007	.7066	.4125	.1184	.8244	.5303	.2362
479	.7656	.4716	.1775	.8834	.5893	.2952	.0011	.7071	.4130	.1189	.8248	.5307	.2366
482	.7660	.4719	.1778	.8838	.5897	.2956	.0016	.7075	.4134	.1193	.8253	.5312	.2371
426485	47.7663	49.4723	51.1782	52.8841	54.5901	56.2960	58.0020	59.7079	61.4138	63.1198	64.8257	66.5317	68.2376
488	.7667	.4726	.1786	.8845	.5905	.2964	.0024	.7083	.4143	.1202	.8262	.5321	.2381
491	.7670	.4730	.1789	.8849	.5908	.2968	.0028	.7087	.4147	.1207	.8266	.5326	.2386
494	.7673	.4733	.1793	.8853	.5912	.2972	.0032	.7092	.4151	.1211	.8271	.5331	.2390
497	.7677	.4737	.1796	.8856	.5916	.2976	.0036	.7096	.4156	.1216	.8275	.5335	.2395
426500	47.7680	49.4740	51.1800	52.8860	54.5920	56.2980	58.0040	59.7100	61.4160	63.1220	64.8280	66.5340	68.2400

BASIC FREQ.	HARMONICS 164	168	172	176	180	184	188	192	200	208	216	224	232
426200	69.8968	71.6016	73.3064	75.0112	76.7160	78.4208	80.1256	81.8304	85.2400	88.6496	92.0592	95.4688	98.8784
203	.8973	.6021	.3069	.0117	.7165	.4214	.1262	.8310	.2406	.6502	.0598	.4695	.8791
206	.8978	.6026	.3074	.0123	.7171	.4219	.1267	.8316	.2412	.6508	.0605	.4701	.8798
209	.8983	.6031	.3079	.0128	.7176	.4225	.1273	.8321	.2418	.6515	.0611	.4708	.8805
212	.8988	.6036	.3085	.0133	.7182	.4230	.1279	.8327	.2424	.6521	.0618	.4715	.8812
426215	69.8993	71.6041	73.3090	75.0138	76.7187	78.4236	80.1284	81.8333	85.2430	88.6527	92.0624	95.4722	98.8819
218	.8998	.6046	.3095	.0144	.7192	.4241	.1290	.9339	.2436	.6533	.0631	.4728	.8826
221	.9002	.6051	.3100	.0149	.7198	.4247	.1295	.8344	.2442	.6540	.0637	.4735	.8833
224	.9007	.6056	.3105	.0154	.7203	.4252	.1301	.8350	.2448	.6546	.0644	.4742	.8840
227	.9012	.6061	.3110	.0160	.7209	.4258	.1307	.8356	.2454	.6552	.0650	.4748	.8847
426230	69.9017	71.6066	73.3116	75.0165	76.7214	78.4263	80.1312	81.8362	85.2460	88.6558	92.0657	95.4755	98.8854
233	.9022	.6071	.3121	.0170	.7219	.4269	.1318	.8367	.2466	.6565	.0663	.4762	.8861
236	.9027	.6076	.3126	.0175	.7225	.4274	.1324	.8373	.2472	.6571	.0670	.4769	.8868
239	.9032	.6082	.3131	.0181	.7230	.4280	.1329	.8379	.2478	.6577	.0676	.4775	.8874
242	.9037	.6087	.3136	.0186	.7236	.4285	.1335	.8385	.2484	.6583	.0683	.4782	.8881
426245	69.9042	71.6092	73.3141	75.0191	76.7241	78.4291	80.1341	81.8390	85.2490	88.6590	92.0689	95.4789	98.8888
248	.9047	.6097	.3147	.0196	.7246	.4296	.1346	.8396	.2496	.6596	.0696	.4796	.8895
251	.9052	.6102	.3152	.0202	.7252	.4302	.1352	.8402	.2502	.6602	.0702	.4802	.8902
254	.9057	.6107	.3157	.0207	.7257	.4307	.1358	.8408	.2508	.6608	.0709	.4809	.8909
257	.9061	.6112	.3162	.0212	.7263	.4313	.1363	.8413	.2514	.6615	.0715	.4816	.8916
426260	69.9066	71.6117	73.3167	75.0218	76.7268	78.4318	80.1369	81.8419	85.2520	88.6621	92.0722	95.4822	98.8923
263	.9071	.6122	.3172	.0223	.7273	.4324	.1374	.8425	.2526	.6627	.0728	.4829	.8930
266	.9076	.6127	.3178	.0228	.7279	.4329	.1380	.8431	.2532	.6633	.0735	.4836	.8937
269	.9081	.6132	.3183	.0233	.7284	.4335	.1386	.8436	.2538	.6640	.0741	.4843	.8944
272	.9086	.6137	.3188	.0239	.7290	.4340	.1391	.8442	.2544	.6646	.0748	.4849	.8951
426275	69.9091	71.6142	73.3193	75.0244	76.7295	78.4346	80.1397	81.8448	85.2550	88.6652	92.0754	95.4856	98.8958
278	.9096	.6147	.3198	.0249	.7300	.4352	.1403	.8454	.2556	.6658	.0760	.4863	.8965
281	.9101	.6152	.3203	.0255	.7306	.4357	.1408	.8460	.2562	.6664	.0767	.4869	.8972
284	.9106	.6157	.3208	.0260	.7311	.4363	.1414	.8465	.2568	.6671	.0773	.4876	.8979
287	.9111	.6162	.3214	.0265	.7317	.4368	.1420	.8471	.2574	.6677	.0780	.4883	.8986
426290	69.9116	71.6167	73.3219	75.0270	76.7322	78.4374	80.1425	81.8477	85.2580	88.6683	92.0786	95.4890	98.8993
293	.9121	.6172	.3224	.0276	.7327	.4379	.1431	.8483	.2586	.6689	.0793	.4896	.9000
296	.9125	.6177	.3229	.0281	.7333	.4385	.1436	.8488	.2592	.6696	.0799	.4903	.9007
299	.9130	.6182	.3234	.0286	.7338	.4390	.1442	.8494	.2598	.6702	.0806	.4910	.9014
302	.9135	.6187	.3239	.0292	.7344	.4396	.1448	.8500	.2604	.6708	.0812	.4916	.9021
426305	69.9140	71.6192	73.3245	75.0297	76.7349	78.4401	80.1453	81.8506	85.2610	88.6714	92.0819	95.4923	98.9028
308	.9145	.6197	.3250	.0302	.7354	.4407	.1459	.8511	.2616	.6721	.0825	.4930	.9035
311	.9150	.6202	.3255	.0307	.7360	.4412	.1465	.8517	.2622	.6727	.0832	.4937	.9042
314	.9155	.6208	.3260	.0313	.7365	.4418	.1470	.8523	.2628	.6733	.0838	.4943	.9048
317	.9160	.6213	.3265	.0318	.7371	.4423	.1476	.8529	.2634	.6739	.0845	.4950	.9055
426320	69.9165	71.6218	73.3270	75.0323	76.7376	78.4429	80.1482	81.8534	85.2640	88.6746	92.0851	95.4957	98.9062
323	.9170	.6223	.3276	.0328	.7381	.4434	.1487	.8540	.2646	.6752	.0858	.4964	.9069
326	.9175	.6228	.3281	.0334	.7387	.4440	.1493	.8546	.2652	.6758	.0864	.4970	.9076
329	.9180	.6233	.3286	.0339	.7392	.4445	.1499	.8552	.2658	.6764	.0871	.4977	.9083
332	.9184	.6238	.3291	.0344	.7398	.4451	.1504	.8557	.2664	.6771	.0877	.4984	.9090
426335	69.9189	71.6243	73.3296	75.0350	76.7403	78.4456	80.1510	81.8563	85.2670	88.6777	92.0884	95.4990	98.9097
338	.9194	.6248	.3301	.0355	.7408	.4462	.1515	.8569	.2676	.6783	.0890	.4997	.9104
341	.9199	.6253	.3307	.0360	.7414	.4467	.1521	.8575	.2682	.6789	.0897	.5004	.9111
344	.9204	.6258	.3312	.0365	.7419	.4473	.1527	.8580	.2688	.6796	.0903	.5011	.9118
347	.9209	.6263	.3317	.0371	.7425	.4478	.1532	.8586	.2694	.6802	.0910	.5017	.9125
426350	69.9214	71.6268	73.3322	75.0376	76.7430	78.4484	80.1538	81.8592	85.2700	88.6808	92.0916	95.5024	98.9132
353	.9219	.6273	.3327	.0381	.7435	.4490	.1544	.8598	.2706	.6814	.0922	.5031	.9139
356	.9224	.6278	.3332	.0387	.7441	.4495	.1549	.8604	.2712	.6820	.0929	.5037	.9146
359	.9229	.6283	.3337	.0392	.7446	.4501	.1555	.8609	.2718	.6827	.0935	.5044	.9153
362	.9234	.6288	.3343	.0397	.7452	.4506	.1561	.8615	.2724	.6833	.0942	.5051	.9160
426365	69.9239	71.6293	73.3348	75.0402	76.7457	78.4512	80.1566	81.8621	85.2730	88.6839	92.0948	95.5058	98.9167
368	.9244	.6298	.3353	.0408	.7462	.4517	.1572	.8627	.2736	.6845	.0955	.5064	.9174
371	.9248	.6303	.3358	.0413	.7468	.4523	.1577	.8632	.2742	.6852	.0961	.5071	.9181
374	.9253	.6308	.3363	.0418	.7473	.4528	.1583	.8638	.2748	.6858	.0968	.5078	.9188
377	.9258	.6313	.3368	.0424	.7479	.4534	.1589	.8644	.2754	.6864	.0974	.5084	.9195
426380	69.9263	71.6318	73.3374	75.0429	76.7484	78.4539	80.1594	81.8650	85.2760	88.6870	92.0981	95.5091	98.9202
383	.9268	.6323	.3379	.0434	.7489	.4545	.1600	.8655	.2766	.6877	.0987	.5098	.9209
386	.9273	.6328	.3384	.0439	.7495	.4550	.1606	.8661	.2772	.6883	.0994	.5105	.9216
389	.9278	.6334	.3389	.0445	.7500	.4556	.1611	.8667	.2778	.6889	.1000	.5111	.9222
392	.9283	.6339	.3394	.0450	.7506	.4561	.1617	.8673	.2784	.6895	.1007	.5118	.9229
426395	69.9288	71.6344	73.3399	75.0455	76.7511	78.4567	80.1623	81.8678	85.2790	88.6902	92.1013	95.5125	98.9236
398	.9293	.6349	.3405	.0460	.7516	.4572	.1628	.8684	.2796	.6908	.1020	.5132	.9243
401	.9298	.6354	.3410	.0466	.7522	.4578	.1634	.8690	.2802	.6914	.1026	.5138	.9250
404	.9303	.6359	.3415	.0471	.7527	.4583	.1640	.8696	.2808	.6920	.1033	.5145	.9257
407	.9307	.6364	.3420	.0476	.7533	.4589	.1645	.8701	.2814	.6927	.1039	.5152	.9264
426410	69.9312	71.6369	73.3425	75.0482	76.7538	78.4594	80.1651	81.8707	85.2820	88.6933	92.1046	95.5158	98.9271
413	.9317	.6374	.3430	.0487	.7543	.4600	.1656	.8713	.2826	.6939	.1052	.5165	.9278
416	.9322	.6379	.3436	.0492	.7549	.4605	.1662	.8719	.2832	.6945	.1059	.5172	.9285
419	.9327	.6384	.3441	.0497	.7554	.4611	.1668	.8724	.2838	.6952	.1065	.5179	.9292
422	.9332	.6389	.3446	.0503	.7560	.4616	.1673	.8730	.2844	.6958	.1072	.5185	.9299
426425	69.9337	71.6394	73.3451	75.0508	76.7565	78.4622	80.1679	81.8736	85.2850	88.6964	92.1078	95.5192	98.9306
428	.9342	.6399	.3456	.0513	.7570	.4628	.1685	.8742	.2856	.6970	.1084	.5199	.9313
431	.9347	.6404	.3461	.0519	.7576	.4633	.1690	.8748	.2862	.6976	.1091	.5205	.9320
434	.9352	.6409	.3466	.0524	.7581	.4639	.1696	.8753	.2868	.6983	.1097	.5212	.9327
437	.9357	.6414	.3472	.0529	.7587	.4644	.1702	.8759	.2874	.6989	.1104	.5219	.9334
426440	69.9362	71.6419	73.3477	75.0534	76.7592	78.4650	80.1707	81.8765	85.2880	88.6995	92.1110	95.5226	98.9341
443	.9367	.6424	.3482	.0540	.7597	.4655	.1713	.8771	.2886	.7001	.1117	.5232	.9348
446	.9371	.6429	.3487	.0545	.7603	.4661	.1718	.8776	.2892	.7008	.1123	.5239	.9355
449	.9376	.6434	.3492	.0550	.7608	.4666	.1724	.8782	.2898	.7014	.1130	.5246	.9362
452	.9381	.6439	.3497	.0556	.7614	.4672	.1730	.8788	.2904	.7020	.1136	.5252	.9369
426455	69.9386	71.6444	73.3503	75.0561	76.7619	78.4677	80.1735	81.8794	85.2910	88.7026	92.1143	95.5259	98.9376
458	.9391	.6449	.3508	.0566	.7624	.4683	.1741	.8799	.2916	.7033	.1149	.5266	.9383
461	.9396	.6454	.3513	.0571	.7630	.4688	.1747	.8805	.2922	.7039	.1156	.5273	.9390
464	.9401	.6460	.3518	.0577	.7635	.4694	.1752	.8811	.2928	.7045	.1162	.5279	.9396
467	.9406	.6465	.3523	.0582	.7641	.4699	.1758	.8817	.2934	.7051	.1169	.5286	.9403
426470	69.9411	71.6470	73.3528	75.0587	76.7646	78.4705	80.1764	81.8822	85.2940	88.7058	92.1175	95.5293	98.9410
473	.9416	.6475	.3534	.0592	.7651	.4710	.1769	.8828	.2946	.7064	.1182	.5300	.9417
476	.9421	.6480	.3539	.0598	.7657	.4716	.1775	.8834	.2952	.7070	.1188	.5306	.9424
479	.9426	.6485	.3544	.0603	.7662	.4721	.1781	.8840	.2958	.7076	.1195	.5313	.9431
482	.9430	.6490	.3549	.0608	.7668	.4727	.1786	.8845	.2964	.7083	.1201	.5320	.9438
426485	69.9435	71.6495	73.3554	75.0614	76.7673	78.4732	80.1792	81.8851	85.2970	88.7089	92.1208	95.5326	98.9445
488	.9440	.6500	.3559	.0619	.7678	.4738	.1797	.8857	.2976	.7095	.1214	.5333	.9452
491	.9445	.6505	.3565	.0624	.7684	.4743	.1803	.8863	.2982	.7101	.1221	.5340	.9459
494	.9450	.6510	.3570	.0629	.7689	.4749	.1809	.8868	.2988	.7108	.1227	.5347	.9466
497	.9455	.7515	.3575	.0635	.7695	.4754	.1814	.8874	.2994	7114	.1234	.5353	.9473
426500	69.9460	71.6520	73.3580	75.0640	76.7700	78.4760	80.1820	81.8880	85.3000	88./120	92.1240	95.5360	98.9480

H A R M O N I C S

BASIC FREQ.	112	116	120	124	128	132	136	140	144	148	152	156	160
426500	47.7680	49.4740	51.1800	52.8860	54.5920	56.2980	58.0040	59.7100	61.4160	63.1220	64.8280	66.5340	68.2400
503	.7683	.4743	.1804	.8864	.5924	.2984	.0044	.7104	.4164	.1224	.8285	.5345	.2405
506	.7687	.4747	.1807	.8867	.5928	.2988	.0048	.7108	.4169	.1229	.8289	.5349	.2410
509	.7690	.4750	.1811	.8871	.5932	.2992	.0052	.7113	.4173	.1233	.8294	.5354	.2414
512	.7693	.4754	.1814	.8875	.5935	.2996	.0056	.7117	.4177	.1238	.8298	.5359	.2419
426515	47.7697	49.4757	51.1818	52.8879	54.5939	56.3000	58.0060	59.7121	61.4182	63.1242	64.8303	66.5363	68.2424
518	.7700	.4761	.1822	.8882	.5943	.3004	.0064	.7125	.4186	.1247	.8307	.5368	.2429
521	.7704	.4764	.1825	.8886	.5947	.3008	.0069	.7129	.4190	.1251	.8312	.5373	.2434
524	.7707	.4768	.1829	.8890	.5951	.3012	.0073	.7134	.4195	.1256	.8316	.5377	.2438
527	.7710	.4771	.1832	.8893	.5955	.3016	.0077	.7138	.4199	.1260	.8321	.5382	.2443
426530	47.7714	49.4775	51.1836	52.8897	54.5958	56.3020	58.0081	59.7142	61.4203	63.1264	64.8326	66.5387	68.2448
533	.7717	.4778	.1840	.8901	.5962	.3024	.0085	.7146	.4208	.1269	.8330	.5391	.2453
536	.7720	.4782	.1843	.8905	.5966	.3028	.0089	.7150	.4212	.1273	.8335	.5396	.2458
539	.7724	.4785	.1847	.8908	.5970	.3031	.0093	.7155	.4216	.1278	.8339	.5401	.2462
542	.7727	.4789	.1850	.8912	.5974	.3035	.0097	.7159	.4220	.1282	.8344	.5406	.2467
426545	47.7730	49.4792	51.1854	52.8916	54.5978	56.3039	58.0101	59.7163	61.4225	63.1287	64.8348	66.5410	68.2472
548	.7734	.4796	.1858	.8920	.5981	.3043	.0105	.7167	.4229	.1291	.8353	.5415	.2477
551	.7737	.4799	.1861	.8923	.5985	.3047	.0109	.7171	.4233	.1295	.8358	.5420	.2482
554	.7740	.4803	.1865	.8927	.5989	.3051	.0113	.7176	.4238	.1300	.8362	.5424	.2486
557	.7744	.4806	.1868	.8931	.5993	.3055	.0118	.7180	.4242	.1304	.8367	.5429	.2491
426560	47.7747	49.4810	51.1872	52.8934	54.5997	56.3059	58.0122	59.7184	61.4246	63.1309	64.8371	66.5434	68.2496
563	.7751	.4813	.1876	.8938	.6001	.3063	.0126	.7188	.4251	.1313	.8376	.5438	.2501
566	.7754	.4817	.1879	.8942	.6004	.3067	.0130	.7192	.4255	.1318	.8380	.5443	.2506
569	.7757	.4820	.1883	.8946	.6008	.3071	.0134	.7197	.4259	.1322	.8385	.5448	.2510
572	.7761	.4824	.1886	.8949	.6012	.3075	.0138	.7201	.4264	.1327	.8389	.5452	.2515
426575	47.7764	49.4827	51.1890	52.8953	54.6016	56.3079	58.0142	59.7205	61.4268	63.1331	64.8394	66.5457	68.2520
578	.7767	.4830	.1894	.8957	.6020	.3083	.0146	.7209	.4272	.1335	.8399	.5462	.2525
581	.7771	.4834	.1897	.8960	.6024	.3087	.0150	.7213	.4277	.1340	.8403	.5466	.2530
584	.7774	.4837	.1901	.8964	.6028	.3091	.0154	.7218	.4281	.1344	.8408	.5471	.2534
587	.7777	.4841	.1904	.8968	.6031	.3095	.0158	.7222	.4285	.1349	.8412	.5476	.2539
426590	47.7781	49.4844	51.1908	52.8972	54.6035	56.3099	58.0162	59.7226	61.4290	63.1353	64.8417	66.5480	68.2544
593	.7784	.4848	.1912	.8975	.6039	.3103	.0166	.7230	.4294	.1358	.8421	.5485	.2549
596	.7788	.4851	.1915	.8979	.6043	.3107	.0171	.7234	.4298	.1362	.8426	.5490	.2554
599	.7791	.4855	.1919	.8983	.6047	.3111	.0175	.7239	.4303	.1367	.8430	.5494	.2558
602	.7794	.4858	.1922	.8986	.6051	.3115	.0179	.7243	.4307	.1371	.8435	.5499	.2563
426605	47.7798	49.4862	51.1926	52.8990	54.6054	56.3119	58.0183	59.7247	61.4311	63.1375	64.8440	66.5504	68.2568
608	.7801	.4865	.1930	.8994	.6058	.3123	.0187	.7251	.4316	.1380	.8444	.5508	.2573
611	.7804	.4869	.1933	.8998	.6062	.3127	.0191	.7255	.4320	.1384	.8449	.5513	.2578
614	.7808	.4872	.1937	.9001	.6066	.3130	.0195	.7260	.4324	.1389	.8453	.5518	.2582
617	.7811	.4876	.1940	.9005	.6070	.3134	.0199	.7264	.4328	.1393	.8458	.5523	.2587
426620	47.7814	49.4879	51.1944	52.9009	54.6074	56.3138	58.0203	59.7268	61.4333	63.1398	64.8462	66.5527	68.2592
623	.7818	.4883	.1948	.9013	.6077	.3142	.0207	.7272	.4337	.1402	.8467	.5532	.2597
626	.7821	.4886	.1951	.9016	.6081	.3146	.0211	.7276	.4341	.1406	.8472	.5537	.2602
629	.7824	.4890	.1955	.9020	.6085	.3150	.0215	.7281	.4346	.1411	.8476	.5541	.2606
632	.7828	.4893	.1958	.9024	.6089	.3154	.0220	.7285	.4350	.1415	.8481	.5546	.2611
426635	47.7831	49.4897	51.1962	52.9027	54.6093	56.3158	58.0224	59.7289	61.4354	63.1420	64.8485	66.5551	68.2616
638	.7835	.4900	.1966	.9031	.6097	.3162	.0228	.7293	.4359	.1424	.8490	.5555	.2621
641	.7838	.4904	.1969	.9035	.6100	.3166	.0232	.7297	.4363	.1429	.8494	.5560	.2626
644	.7841	.4907	.1973	.9039	.6104	.3170	.0236	.7302	.4367	.1433	.8499	.5565	.2630
647	.7845	.4911	.1976	.9042	.6108	.3174	.0240	.7306	.4372	.1438	.8503	.5569	.2635
426650	47.7848	49.4914	51.1980	52.9046	54.6112	56.3178	58.0244	59.7310	61.4376	63.1442	64.8508	66.5574	68.2640
653	.7851	.4917	.1984	.9050	.6116	.3182	.0248	.7314	.4380	.1446	.8513	.5579	.2645
656	.7855	.4921	.1987	.9053	.6120	.3186	.0252	.7318	.4385	.1451	.8517	.5583	.2650
659	.7858	.4924	.1991	.9057	.6124	.3190	.0256	.7323	.4389	.1455	.8522	.5588	.2654
662	.7861	.4928	.1994	.9061	.6127	.3194	.0260	.7327	.4393	.1460	.8526	.5593	.2659
426665	47.7865	49.4931	51.1998	52.9065	54.6131	56.3198	58.0264	59.7331	61.4398	63.1464	64.8531	66.5597	68.2664
668	.7868	.4935	.2002	.9068	.6135	.3202	.0268	.7335	.4402	.1469	.8535	.5602	.2669
671	.7872	.4938	.2005	.9072	.6139	.3206	.0273	.7339	.4406	.1473	.8540	.5607	.2674
674	.7875	.4942	.2009	.9076	.6143	.3210	.0277	.7344	.4411	.1478	.8544	.5611	.2678
677	.7878	.4945	.2012	.9079	.6147	.3214	.0281	.7348	.4415	.1482	.8549	.5616	.2683
426680	47.7882	49.4949	51.2016	52.9083	54.6150	56.3218	58.0285	59.7352	61.4419	63.1486	64.8554	66.5621	68.2688
683	.7885	.4952	.2020	.9087	.6154	.3222	.0289	.7356	.4424	.1491	.8558	.5625	.2693
686	.7888	.4956	.2023	.9091	.6158	.3226	.0293	.7360	.4428	.1495	.8563	.5630	.2698
689	.7892	.4959	.2027	.9094	.6162	.3229	.0297	.7365	.4432	.1500	.8567	.5635	.2702
692	.7895	.4963	.2030	.9098	.6166	.3233	.0301	.7369	.4436	.1504	.8572	.5640	.2707
426695	47.7898	49.4966	51.2034	52.9102	54.6170	56.3237	58.0305	59.7373	61.4441	63.1509	64.8576	66.5644	68.2712
698	.7902	.4970	.2038	.9106	.6173	.3241	.0309	.7377	.4445	.1513	.8581	.5649	.2717
701	.7905	.4973	.2041	.9109	.6177	.3245	.0313	.7381	.4449	.1517	.8586	.5654	.2722
704	.7908	.4977	.2045	.9113	.6181	.3249	.0317	.7386	.4454	.1522	.8590	.5658	.2726
707	.7912	.4980	.2048	.9117	.6185	.3253	.0322	.7390	.4458	.1526	.8595	.5663	.2731
426710	47.7915	49.4984	51.2052	52.9120	54.6189	56.3257	58.0326	59.7394	61.4462	63.1531	64.8599	66.5668	68.2736
713	.7919	.4987	.2056	.9124	.6193	.3261	.0330	.7398	.4467	.1535	.8604	.5672	.2741
716	.7922	.4991	.2059	.9128	.6196	.3265	.0334	.7402	.4471	.1540	.8608	.5677	.2746
719	.7925	.4994	.2063	.9132	.6200	.3269	.0338	.7407	.4475	.1544	.8613	.5682	.2750
722	.7929	.4998	.2066	.9135	.6204	.3273	.0342	.7411	.4480	.1549	.8617	.5686	.2755
426725	47.7932	49.5001	51.2070	52.9139	54.6208	56.3277	58.0346	59.7415	61.4484	63.1553	64.8622	66.5691	68.2760
728	.7935	.5004	.2074	.9143	.6212	.3281	.0350	.7419	.4488	.1557	.8627	.5696	.2765
731	.7939	.5008	.2077	.9146	.6216	.3285	.0354	.7423	.4493	.1562	.8631	.5700	.2770
734	.7942	.5011	.2081	.9150	.6220	.3289	.0358	.7428	.4497	.1566	.8636	.5705	.2774
737	.7945	.5015	.2084	.9154	.6223	.3293	.0362	.7432	.4501	.1571	.8640	.5710	.2779
426740	47.7949	49.5018	51.2088	52.9158	54.6227	56.3297	58.0366	59.7436	61.4506	63.1575	64.8645	66.5714	68.2784
743	.7952	.5022	.2092	.9161	.6231	.3301	.0370	.7440	.4510	.1580	.8649	.5719	.2789
746	.7956	.5025	.2095	.9165	.6235	.3305	.0375	.7444	.4514	.1584	.8654	.5724	.2794
749	.7959	.5029	.2099	.9169	.6239	.3309	.0379	.7449	.4519	.1589	.8658	.5728	.2798
752	.7962	.5032	.2102	.9172	.6243	.3313	.0383	.7453	.4523	.1593	.8663	.5733	.2803
426755	47.7966	49.5036	51.2106	52.9176	54.6246	56.3317	58.0387	59.7457	61.4527	63.1597	64.8668	66.5738	68.2808
758	.7969	.5039	.2110	.9180	.6250	.3321	.0391	.7461	.4532	.1602	.8672	.5742	.2813
761	.7972	.5043	.2113	.9184	.6254	.3325	.0395	.7465	.4536	.1606	.8677	.5747	.2818
764	.7976	.5046	.2117	.9187	.6258	.3328	.0399	.7470	.4540	.1611	.8681	.5752	.2822
767	.7979	.5050	.2120	.9191	.6262	.3332	.0403	.7474	.4544	.1615	.8686	.5757	.2827
426770	47.7982	49.5053	51.2124	52.9195	54.6266	56.3336	58.0407	59.7478	61.4549	63.1620	64.8690	66.5761	68.2832
773	.7986	.5057	.2128	.9199	.6269	.3340	.0411	.7482	.4553	.1624	.8695	.5766	.2837
776	.7989	.5060	.2131	.9202	.6273	.3344	.0415	.7486	.4557	.1628	.8700	.5771	.2842
779	.7992	.5064	.2135	.9206	.6277	.3348	.0419	.7491	.4562	.1633	.8704	.5775	.2846
782	.7996	.5067	.2138	.9210	.6281	.3352	.0424	.7495	.4566	.1637	.8709	.5780	.2851
426785	47.7999	49.5071	51.2142	52.9213	54.6285	56.3356	58.0428	59.7499	61.4570	63.1642	64.8713	66.5785	68.2856
788	.8003	.5074	.2146	.9217	.6289	.3360	.0432	.7503	.4575	.1646	.8718	.5789	.2861
791	.8006	.5078	.2149	.9221	.6292	.3364	.0436	.7507	.4579	.1651	.8722	.5794	.2866
794	.8009	.5081	.2153	.9225	.6296	.3368	.0440	.7512	.4583	.1655	.8727	.5799	.2870
797	.8013	.5085	.2156	.9228	.6300	.3372	.0444	.7516	.4588	.1660	.8731	.5803	.2875
426800	47.8016	49.5088	51.2160	52.9232	54.6304	56.3376	58.0448	59.7520	61.4592	63.1664	64.8736	66.5808	68.2880

MEGACYCLES PER SECOND

H A R M O N I C S

BASIC FREQ.	164	168	172	176	180	184	188	192	200	208	216	224	232
426500	69.9460	71.6520	73.3580	75.0640	76.7700	78.4760	80.1820	81.8880	85.3000	88.7120	92.1240	95.5360	98.9480
503	.9465	.6525	.3585	.0645	.7705	.4766	.1826	.8886	.3006	.7126	.1246	.5367	.9487
506	.9470	.6530	.3590	.0651	.7711	.4771	.1831	.8892	.3012	.7132	.1253	.5373	.9494
509	.9475	.6535	.3595	.0656	.7716	.4777	.1837	.8897	.3018	.7139	.1259	.5380	.9501
512	.9480	.6540	.3601	.0661	.7722	.4782	.1843	.8903	.3024	.7145	.1266	.5387	.9508
426515	69.9485	71.6545	73.3606	75.0666	76.7727	78.4788	80.1848	81.8909	85.3030	88.7151	92.1272	95.5394	98.9515
518	.9490	.6550	.3611	.0672	.7732	.4793	.1854	.8915	.3036	.7157	.1279	.5400	.9522
521	.9494	.6555	.3616	.0677	.7738	.4799	.1859	.8920	.3042	.7164	.1285	.5407	.9529
524	.9499	.6560	.3621	.0682	.7743	.4804	.1865	.8926	.3048	.7170	.1292	.5414	.9536
527	.9504	.6565	.3626	.0688	.7749	.4810	.1871	.8932	.3054	.7176	.1298	.5420	.9543
426530	69.9509	71.6570	73.3632	75.0693	76.7754	78.4815	80.1876	81.8938	85.3060	88.7182	92.1305	95.5427	98.9550
533	.9514	.6575	.3637	.0698	.7759	.4821	.1882	.8943	.3066	.7189	.1311	.5434	.9557
536	.9519	.6580	.3642	.0703	.7765	.4826	.1888	.8949	.3072	.7195	.1318	.5441	.9564
539	.9524	.6586	.3647	.0709	.7770	.4832	.1893	.8955	.3078	.7201	.1324	.5447	.9570
542	.9529	.6591	.3652	.0714	.7776	.4837	.1899	.8961	.3084	.7207	.1331	.5454	.9577
426545	69.9534	71.6596	73.3657	75.0719	76.7781	78.4843	80.1905	81.8966	85.3090	88.7214	92.1337	95.5461	98.9584
548	.9539	.6601	.3663	.0724	.7786	.4848	.1910	.8972	.3096	.7220	.1344	.5468	.9591
551	.9544	.6606	.3668	.0730	.7792	.4854	.1916	.8978	.3102	.7226	.1350	.5474	.9598
554	.9549	.6611	.3673	.0735	.7797	.4859	.1922	.8984	.3108	.7232	.1357	.5481	.9605
557	.9553	.6616	.3678	.0740	.7803	.4865	.1927	.8989	.3114	.7239	.1363	.5488	.9612
426560	69.9558	71.6621	73.3683	75.0746	76.7808	78.4870	80.1933	81.8995	85.3120	88.7245	92.1370	95.5494	98.9619
563	.9563	.6626	.3688	.0751	.7813	.4876	.1938	.9001	.3126	.7251	.1376	.5501	.9626
566	.9568	.6631	.3694	.0756	.7819	.4881	.1944	.9007	.3132	.7257	.1383	.5508	.9633
569	.9573	.6636	.3699	.0761	.7824	.4887	.1950	.9012	.3138	.7264	.1389	.5515	.9640
572	.9578	.6641	.3704	.0767	.7830	.4892	.1955	.9018	.3144	.7270	.1396	.5521	.9647
426575	69.9583	71.6646	73.3709	75.0772	76.7835	78.4898	80.1961	81.9024	85.3150	88.7276	92.1402	95.5528	98.9654
578	.9588	.6651	.3714	.0777	.7840	.4904	.1967	.9030	.3156	.7282	.1408	.5535	.9661
581	.9593	.6656	.3719	.0783	.7846	.4909	.1972	.9036	.3162	.7288	.1415	.5541	.9668
584	.9598	.6661	.3724	.0788	.7851	.4915	.1978	.9041	.3168	.7295	.1421	.5548	.9675
587	.9603	.6666	.3730	.0793	.7857	.4920	.1984	.9047	.3174	.7301	.1428	.5555	.9682
426590	69.9608	71.6671	73.3735	75.0798	76.7862	78.4926	80.1989	81.9053	85.3180	88.7307	92.1434	95.5562	98.9689
593	.9613	.6676	.3740	.0804	.7867	.4931	.1995	.9059	.3186	.7313	.1441	.5568	.9696
596	.9617	.6681	.3745	.0809	.7873	.4937	.2000	.9064	.3192	.7320	.1447	.5575	.9703
599	.9622	.6686	.3750	.0814	.7878	.4942	.2006	.9070	.3198	.7326	.1454	.5582	.9710
602	.9627	.6691	.3755	.0820	.7884	.4948	.2012	.9076	.3204	.7332	.1460	.5588	.9717
426605	69.9632	71.6696	73.3761	75.0825	76.7889	78.4953	80.2017	81.9082	85.3210	88.7338	92.1467	95.5595	98.9724
608	.9637	.6701	.3766	.0830	.7894	.4959	.2023	.9087	.3216	.7345	.1473	.5602	.9731
611	.9642	.6706	.3771	.0835	.7900	.4964	.2029	.9093	.3222	.7351	.1480	.5609	.9738
614	.9647	.6712	.3776	.0841	.7905	.4970	.2034	.9099	.3228	.7357	.1486	.5615	.9744
617	.9652	.6717	.3781	.0846	.7911	.4975	.2040	.9105	.3234	.7363	.1493	.5622	.9751
426620	69.9657	71.6722	73.3786	75.0851	76.7916	78.4981	80.2046	81.9110	85.3240	88.7370	92.1499	95.5629	98.9758
623	.9662	.6727	.3792	.0856	.7921	.4986	.2051	.9116	.3246	.7376	.1506	.5636	.9765
626	.9667	.6732	.3797	.0862	.7927	.4992	.2057	.9122	.3252	.7382	.1512	.5642	.9772
629	.9672	.6737	.3802	.0867	.7932	.4997	.2063	.9128	.3258	.7388	.1519	.5649	.9779
632	.9676	.6742	.3807	.0872	.7938	.5003	.2068	.9133	.3264	.7395	.1525	.5656	.9786
426635	69.9681	71.6747	73.3812	75.0878	76.7943	78.5008	80.2074	81.9139	85.3270	88.7401	92.1532	95.5662	98.9793
638	.9686	.6752	.3817	.0883	.7948	.5014	.2079	.9145	.3276	.7407	.1538	.5669	.9800
641	.9691	.6757	.3823	.0888	.7954	.5019	.2085	.9151	.3282	.7413	.1545	.5676	.9807
644	.9696	.6762	.3828	.0893	.7959	.5025	.2091	.9156	.3288	.7420	.1551	.5683	.9814
647	.9701	.6767	.3833	.0899	.7965	.5030	.2096	.9162	.3294	.7426	.1558	.5689	.9821
426650	69.9706	71.6772	73.3838	75.0904	76.7970	78.5036	80.2102	81.9168	85.3300	88.7432	92.1564	95.5696	98.9828
653	.9711	.6777	.3843	.0909	.7975	.5042	.2108	.9174	.3306	.7438	.1570	.5703	.9835
656	.9716	.6782	.3848	.0915	.7981	.5047	.2113	.9180	.3312	.7444	.1577	.5709	.9842
659	.9721	.6787	.3853	.0920	.7986	.5053	.2119	.9185	.3318	.7451	.1583	.5716	.9849
662	.9726	.6792	.3859	.0925	.7992	.5058	.2125	.9191	.3324	.7457	.1590	.5723	.9856
426665	69.9731	71.6797	73.3864	75.0930	76.7997	78.5064	80.2130	81.9197	85.3330	88.7463	92.1596	95.5730	98.9863
668	.9736	.6802	.3869	.0936	.8002	.5069	.2136	.9203	.3336	.7469	.1603	.5736	.9870
671	.9740	.6807	.3874	.0941	.8008	.5075	.2141	.9208	.3342	.7476	.1609	.5743	.9877
674	.9745	.6812	.3879	.0946	.8013	.5080	.2147	.9214	.3348	.7482	.1616	.5750	.9884
677	.9750	.6817	.3884	.0952	.8019	.5086	.2153	.9220	.3354	.7488	.1622	.5756	.9891
426680	69.9755	71.6822	73.3890	75.0957	76.8024	78.5091	80.2158	81.9226	85.3360	88.7494	92.1629	95.5763	98.9898
683	.9760	.6827	.3895	.0962	.8029	.5097	.2164	.9231	.3366	.7501	.1635	.5770	.9905
686	.9765	.6832	.3900	.0967	.8035	.5102	.2170	.9237	.3372	.7507	.1642	.5777	.9912
689	.9770	.6838	.3905	.0973	.8040	.5108	.2175	.9243	.3378	.7513	.1648	.5783	.9918
692	.9775	.6843	.3910	.0978	.8046	.5113	.2181	.9249	.3384	.7519	.1655	.5790	.9925
426695	69.9780	71.6848	73.3915	75.0983	76.8051	78.5119	80.2187	81.9254	85.3390	88.7526	92.1661	95.5797	98.9932
698	.9785	.6853	.3921	.0988	.8056	.5124	.2192	.9260	.3396	.7532	.1668	.5804	.9939
701	.9790	.6858	.3926	.0994	.8062	.5130	.2198	.9266	.3402	.7538	.1674	.5810	.9946
704	.9795	.6863	.3931	.0999	.8067	.5135	.2204	.9272	.3408	.7544	.1681	.5817	.9953
707	.9799	.6868	.3936	.1004	.8073	.5141	.2209	.9277	.3414	.7551	.1687	.5824	.9960
426610	69.9804	71.6873	73.3941	75.1010	76.8078	78.5146	80.2215	81.9283	85.3420	88.7557	92.1694	95.5830	98.9967
713	.9809	.6878	.3946	.1015	.8083	.5152	.2220	.9289	.3426	.7563	.1700	.5837	.9974
716	.9814	.6883	.3952	.1020	.8089	.5157	.2226	.9295	.3432	.7569	.1707	.5844	.9981
719	.9819	.6888	.3957	.1025	.8094	.5163	.2232	.9300	.3438	.7576	.1713	.5851	.9988
722	.9824	.6893	.3962	.1031	.8100	.5168	.2237	.9306	.3444	.7582	.1720	.5857	.9995
426725	69.9829	71.6898	73.3967	75.1036	76.8105	78.5174	80.2243	81.9312	85.3450	88.7588	92.1726	95.5864	99.0002
728	.9834	.6903	.3972	.1041	.8110	.5180	.2249	.9318	.3456	.7594	.1732	.5871	.0009
731	.9839	.6908	.3977	.1047	.8116	.5185	.2254	.9324	.3462	.7600	.1739	.5877	.0016
734	.9844	.6913	.3982	.1052	.8121	.5191	.2260	.9329	.3468	.7607	.1745	.5884	.0023
737	.9849	.6918	.3988	.1057	.8127	.5196	.2266	.9335	.3474	.7613	.1752	.5891	.0030
426740	69.9854	71.6923	73.3993	75.1062	76.8132	78.5202	80.2271	81.9341	85.3480	88.7619	92.1758	95.5898	99.0037
743	.9859	.6928	.3998	.1068	.8137	.5207	.2277	.9347	.3486	.7625	.1765	.5904	.0044
746	.9863	.6933	.4003	.1073	.8143	.5213	.2282	.9352	.3492	.7632	.1771	.5911	.0051
749	.9868	.6938	.4008	.1078	.8148	.5218	.2288	.9358	.3498	.7638	.1778	.5918	.0058
752	.9873	.6943	.4013	.1084	.8154	.5224	.2294	.9364	.3504	.7644	.1784	.5924	.0065
426755	69.9878	71.6948	73.4019	75.1089	76.8159	78.5229	80.2299	81.9370	85.3510	88.7650	92.1791	95.5931	99.0072
758	.9883	.6953	.4024	.1094	.8164	.5235	.2305	.9375	.3516	.7657	.1797	.5938	.0079
761	.9888	.6958	.4029	.1099	.8170	.5240	.2311	.9381	.3522	.7663	.1804	.5945	.0086
764	.9893	.6964	.4034	.1105	.8175	.5246	.2316	.9387	.3528	.7669	.1810	.5951	.0092
767	.9898	.6969	.4039	.1110	.8181	.5251	.2322	.9393	.3534	.7675	.1817	.5958	.0099
426770	69.9903	71.6974	73.4044	75.1115	76.8186	78.5257	80.2328	81.9398	85.3540	88.7682	92.1823	95.5965	99.0106
773	.9908	.6979	.4050	.1120	.8191	.5262	.2333	.9404	.3546	.7688	.1830	.5972	.0113
776	.9913	.6984	.4055	.1126	.8197	.5268	.2339	.9410	.3552	.7694	.1836	.5978	.0120
779	.9918	.6989	.4060	.1131	.8202	.5273	.2345	.9416	.3558	.7700	.1843	.5985	.0127
782	.9922	.6994	.4065	.1136	.8208	.5279	.2350	.9421	.3564	.7707	.1849	.5992	.0134
426785	69.9927	71.6999	73.4070	75.1142	76.8213	78.5284	80.2356	81.9427	85.3570	88.7713	92.1856	95.5998	99.0141
788	.9932	.7004	.4075	.1147	.8218	.5290	.2361	.9433	.3576	.7719	.1862	.6005	.0148
791	.9937	.7009	.4081	.1152	.8224	.5295	.2367	.9439	.3582	.7725	.1869	.6012	.0155
794	.9942	.7014	.4086	.1157	.8229	.5301	.2373	.9444	.3588	.7732	.1875	.6019	.0162
797	.9947	.7019	.4091	.1163	.8235	.5306	.2378	.9450	.3594	.7738	.1882	.6025	.0169
426800	69.9952	71.7024	73.4096	75.1168	76.8240	78.5312	80.2384	81.9456	85.3600	88.7744	92.1888	95.6032	99.0176

MEGACYCLES PER SECOND

H A R M O N I C S

BASIC FREQ.	112	116	120	124	128	132	136	140	144	148	152	156	160
426800	47.8016	49.5088	51.2160	52.9232	54.6304	56.3376	58.0448	59.7520	61.4592	63.1664	64.8736	66.5808	68.2880
803	.8019	.5091	.2164	.9236	.6308	.3380	.0452	.7524	.4596	.1668	.8741	.5813	.2885
806	.8023	.5095	.2167	.9239	.6312	.3384	.0456	.7528	.4601	.1673	.8745	.5817	.2890
809	.8026	.5098	.2171	.9243	.6316	.3388	.0460	.7533	.4605	.1677	.8750	.5822	.2894
812	.8029	.5102	.2174	.9247	.6319	.3392	.0464	.7537	.4609	.1682	.8754	.5827	.2899
426815	47.8033	49.5105	51.2178	52.9251	54.6323	56.3396	58.0468	59.7541	61.4614	63.1686	64.8759	66.5831	68.2904
818	.8036	.5109	.2182	.9254	.6327	.3400	.0472	.7545	.4618	.1691	.8763	.5836	.2909
821	.8040	.5112	.2185	.9258	.6331	.3404	.0477	.7549	.4622	.1695	.8768	.5841	.2914
824	.8043	.5116	.2189	.9262	.6335	.3408	.0481	.7554	.4627	.1700	.8772	.5845	.2918
827	.8046	.5119	.2192	.9265	.6339	.3412	.0485	.7558	.4631	.1704	.8777	.5850	.2923
426830	47.8050	49.5123	51.2196	52.9269	54.6342	56.3416	58.0489	59.7562	61.4635	63.1708	64.8782	66.5855	68.2928
833	.8053	.5126	.2200	.9273	.6346	.3420	.0493	.7566	.4640	.1713	.8786	.5859	.2933
836	.8056	.5130	.2203	.9277	.6350	.3424	.0497	.7570	.4644	.1717	.8791	.5864	.2938
839	.8060	.5133	.2207	.9280	.6354	.3427	.0501	.7575	.4648	.1722	.8795	.5869	.2942
842	.8063	.5137	.2210	.9284	.6358	.3431	.0505	.7579	.4652	.1726	.8800	.5874	.2947
426845	47.8066	49.5140	51.2214	52.9288	54.6362	56.3435	58.0509	59.7583	61.4657	63.1731	64.8804	66.5878	68.2952
848	.8070	.5144	.2218	.9292	.6365	.3439	.0513	.7587	.4661	.1735	.8809	.5883	.2957
851	.8073	.5147	.2221	.9295	.6369	.3443	.0517	.7591	.4665	.1739	.8814	.5888	.2962
854	.8076	.5151	.2225	.9299	.6373	.3447	.0521	.7596	.4670	.1744	.8818	.5892	.2966
857	.8080	.5154	.2228	.9303	.6377	.3451	.0526	.7600	.4674	.1748	.8823	.5897	.2971
426860	47.8083	49.5158	51.2232	52.9306	54.6381	56.3455	58.0530	59.7604	61.4678	63.1753	64.8827	66.5902	68.2976
863	.8087	.5161	.2236	.9310	.6385	.3459	.0534	.7608	.4683	.1757	.8832	.5906	.2981
866	.8090	.5165	.2239	.9314	.6388	.3463	.0538	.7612	.4687	.1762	.8836	.5911	.2986
869	.8093	.5168	.2243	.9318	.6392	.3467	.0542	.7617	.4691	.1766	.8841	.5916	.2990
872	.8097	.5172	.2246	.9321	.6396	.3471	.0546	.7621	.4696	.1771	.8845	.5920	.2995
426875	47.8100	49.5175	51.2250	52.9325	54.6400	56.3475	58.0550	59.7625	61.4700	63.1775	64.8850	66.5925	68.3000
878	.8103	.5178	.2254	.9329	.6404	.3479	.0554	.7629	.4704	.1779	.8855	.5930	.3005
881	.8107	.5182	.2257	.9332	.6408	.3483	.0558	.7633	.4709	.1784	.8859	.5934	.3010
884	.8110	.5185	.2261	.9336	.6412	.3487	.0562	.7638	.4713	.1788	.8864	.5939	.3014
887	.8113	.5189	.2264	.9340	.6415	.3491	.0566	.7642	.4717	.1793	.8868	.5944	.3019
426890	47.8117	49.5192	51.2268	52.9344	54.6419	56.3495	58.0570	59.7646	61.4722	63.1797	64.8873	66.5948	68.3024
893	.8120	.5196	.2272	.9347	.6423	.3499	.0574	.7650	.4726	.1802	.8877	.5953	.3029
896	.8124	.5199	.2275	.9351	.6427	.3503	.0579	.7654	.4730	.1806	.8882	.5958	.3034
899	.8127	.5203	.2279	.9355	.6431	.3507	.0583	.7659	.4735	.1811	.8886	.5962	.3038
902	.8130	.5206	.2282	.9358	.6435	.3511	.0587	.7663	.4739	.1815	.8891	.5967	.3043
426905	47.8134	49.5210	51.2286	52.9362	54.6438	56.3515	58.0591	59.7667	61.4743	63.1819	64.8896	66.5972	68.3048
908	.8137	.5213	.2290	.9366	.6442	.3519	.0595	.7671	.4748	.1824	.8900	.5976	.3053
911	.8140	.5217	.2293	.9370	.6446	.3523	.0599	.7675	.4752	.1828	.8905	.5981	.3058
914	.8144	.5220	.2297	.9373	.6450	.3526	.0603	.7680	.4756	.1833	.8909	.5986	.3062
917	.8147	.5224	.2300	.9377	.6454	.3530	.0607	.7684	.4760	.1837	.8914	.5991	.3067
426920	47.8150	49.5227	51.2304	52.9381	54.6458	56.3534	58.0611	59.7688	61.4765	63.1842	64.8918	66.5995	68.3072
923	.8154	.5231	.2308	.9385	.6461	.3538	.0615	.7692	.4769	.1846	.8923	.6000	.3077
926	.8157	.5234	.2311	.9388	.6465	.3542	.0619	.7696	.4773	.1850	.8928	.6005	.3082
929	.8160	.5238	.2315	.9392	.6469	.3546	.0623	.7701	.4778	.1855	.8932	.6009	.3086
932	.8164	.5241	.2318	.9396	.6473	.3550	.0628	.7705	.4782	.1859	.8937	.6014	.3091
426935	47.8167	49.5245	51.2322	52.9399	54.6477	56.3554	58.0632	59.7709	61.4786	63.1864	64.8941	66.6019	68.3096
938	.8171	.5248	.2326	.9403	.6481	.3558	.0636	.7713	.4791	.1868	.8946	.6023	.3101
941	.8174	.5252	.2329	.9407	.6484	.3562	.0640	.7717	.4795	.1873	.8950	.6028	.3106
944	.8177	.5255	.2333	.9411	.6488	.3566	.0644	.7722	.4799	.1877	.8955	.6033	.3110
947	.8181	.5259	.2336	.9414	.6492	.3570	.0648	.7726	.4804	.1882	.8959	.6037	.3115
426950	47.8184	49.5262	51.2340	52.9418	54.6496	56.3574	58.0652	59.7730	61.4808	63.1886	64.8964	66.6042	68.3120
953	.8187	.5265	.2344	.9422	.6500	.3578	.0656	.7734	.4812	.1890	.8969	.6047	.3125
956	.8191	.5269	.2347	.9425	.6504	.3582	.0660	.7738	.4817	.1895	.8973	.6051	.3130
959	.8194	.5272	.2351	.9429	.6508	.3586	.0664	.7743	.4821	.1899	.8978	.6056	.3134
962	.8197	.5276	.2354	.9433	.6511	.3590	.0668	.7747	.4825	.1904	.8982	.6061	.3139
426965	47.8201	49.5279	51.2358	52.9437	54.6515	56.3594	58.0672	59.7751	61.4830	63.1908	64.8987	66.6065	68.3144
968	.8204	.5283	.2362	.9440	.6519	.3598	.0676	.7755	.4834	.1913	.8991	.6070	.3149
971	.8208	.5286	.2365	.9444	.6523	.3602	.0681	.7759	.4838	.1917	.8996	.6075	.3154
974	.8211	.5290	.2369	.9448	.6527	.3606	.0685	.7764	.4843	.1922	.9000	.6079	.3158
977	.8214	.5293	.2372	.9451	.6531	.3610	.0689	.7768	.4847	.1926	.9005	.6084	.3163
426980	47.8218	49.5297	51.2376	52.9455	54.6534	56.3614	58.0693	59.7772	61.4851	63.1930	64.9010	66.6089	68.3168
983	.8221	.5300	.2380	.9459	.6538	.3618	.0697	.7776	.4856	.1935	.9014	.6093	.3173
986	.8224	.5304	.2383	.9463	.6542	.3622	.0701	.7780	.4860	.1939	.9019	.6098	.3178
989	.8228	.5307	.2387	.9466	.6546	.3625	.0705	.7785	.4864	.1944	.9023	.6103	.3182
992	.8231	.5311	.2390	.9470	.6550	.3629	.0709	.7789	.4868	.1948	.9028	.6108	.3187
426995	47.8234	49.5314	51.2394	52.9474	54.6554	56.3633	58.0713	59.7793	61.4873	63.1953	64.9032	66.6112	68.3192
998	.8238	.5318	.2398	.9478	.6557	.3637	.0717	.7797	.4877	.1957	.9037	.6117	.3197
427001	.8241	.5321	.2401	.9481	.6561	.3641	.0721	.7801	.4881	.1961	.9042	.6122	.3202
004	.8244	.5325	.2405	.9485	.6565	.3645	.0725	.7806	.4886	.1966	.9046	.6126	.3206
007	.8248	.5328	.2408	.9489	.6569	.3649	.0730	.7810	.4890	.1970	.9051	.6131	.3211
427010	47.8251	49.5332	51.2412	52.9492	54.6573	56.3653	58.0734	59.7814	61.4894	63.1975	64.9055	66.6136	68.3216
013	.8255	.5335	.2416	.9496	.6577	.3657	.0738	.7818	.4899	.1979	.9060	.6140	.3221
016	.8258	.5339	.2419	.9500	.6580	.3661	.0742	.7822	.4903	.1984	.9064	.6145	.3226
019	.8261	.5342	.2423	.9504	.6584	.3665	.0746	.7827	.4907	.1988	.9069	.6150	.3230
022	.8265	.5346	.2426	.9507	.6588	.3669	.0750	.7831	.4912	.1993	.9073	.6154	.3235
427025	47.8268	49.5349	51.2430	52.9511	54.6592	56.3673	58.0754	59.7835	61.4916	63.1997	64.9078	66.6159	68.3240
028	.8271	.535	.2434	.9515	.6596	.3677	.0758	.7839	.4920	.2001	.9083	.6164	.3245
031	.8275	.5356	.2437	.9518	.6600	.3681	.0762	.7843	.4925	.2006	.9087	.6168	.3250
034	.8278	.5359	.2441	.9522	.6604	.3685	.0766	.7848	.4929	.2010	.9092	.6173	.3254
037	.8281	.5363	.2444	.9526	.6607	.3689	.0770	.7852	.4923	.2015	.9096	.6178	.3259
427040	47.8285	49.5366	51.2448	52.9530	54.6611	56.3693	58.0774	59.7856	61.4938	63.2019	64.9101	66.6182	68.3264
043	.8288	.5370	.2452	.9533	.6615	.3697	.0778	.7860	.4942	.2024	.9105	.6187	.3269
046	.8292	.5373	.2455	.9537	.6619	.3701	.0783	.7864	.4946	.2028	.9110	.6192	.3274
049	.8295	.5377	.2459	.9541	.6623	.3705	.0787	.7869	.4951	.2033	.9114	.6196	.3278
052	.8298	.5380	.2462	.9544	.6627	.3709	.0791	.7873	.4955	.2037	.9119	.6201	.3283
427055	47.8302	49.5384	51.2466	52.9548	54.6630	56.3713	58.0795	59.7877	61.4959	63.2041	64.9124	66.6206	68.3288
058	.8305	.5387	.2470	.9552	.6634	.3717	.0799	.7881	.4964	.2046	.9128	.6210	.3293
061	.8308	.5391	.2473	.9556	.6638	.3721	.0803	.7885	.4968	.2050	.9133	.6215	.3298
064	.8312	.5394	.2477	.9559	.6642	.3724	.0807	.7890	.4972	.2055	.9137	.6220	.3302
067	.8315	.5398	.2480	.9563	.6646	.3728	.0811	.7894	.4976	.2059	.9142	.6225	.3307
427070	47.8318	49.5401	51.2484	52.9567	54.6650	56.3732	58.0815	59.7898	61.4981	63.2064	64.9146	66.6229	68.3312
073	.8322	.5405	.2488	.9571	.6653	.3736	.0819	.7902	.4985	.2068	.9151	.6234	.3317
076	.8325	.5408	.2491	.9574	.6657	.3740	.0823	.7906	.4989	.2072	.9156	.6239	.3322
079	.8328	.5412	.2495	.9578	.6661	.3744	.0827	.7911	.4994	.2077	.9160	.6243	.3326
082	.8332	.5415	.2498	.9582	.6665	.3748	.0832	.7915	.4998	.2081	.9165	.6248	.3331
427085	47.8335	49.5419	51.2502	52.9585	54.6669	56.3752	58.0836	59.7919	61.5002	63.2086	64.9169	66.6253	68.3336
088	.8339	.5422	.2506	.9589	.6673	.3756	.0840	.7923	.5007	.2090	.9174	.6257	.3341
091	.8342	.5426	.2509	.9593	.6676	.3760	.0844	.7927	.5011	.2095	.9178	.6262	.3346
094	.8345	.5429	.2513	.9597	.6680	.3764	.0848	.7932	.5015	.2099	.9183	.6267	.3350
097	.8349	.5433	.2516	.9600	.6684	.3768	.0852	.7936	.5020	.2104	.9187	.6271	.3355
427100	47.8352	49.5436	51.2520	52.9604	54.6688	56.3772	58.0856	59.7940	61.5024	63.2108	64.9192	66.6276	68.3360

MEGACYCLES PER SECOND

BASIC FREQ.	HARMONICS												
	164	168	172	176	180	184	188	192	200	208	216	224	232
426800	69.9952	71.7024	73.4096	75.1168	76.8240	78.5312	80.2384	81.9456	85.3600	88.7744	92.1888	95.6032	99.1076
803	.9957	.7029	.4101	.1173	.8245	.5318	.2390	.9462	.3606	.7750	.1894	.6039	.0183
806	.9962	.7034	.4106	.1179	.8251	.5323	.2395	.9468	.3612	.7756	.1901	.6045	.0190
809	.9967	.7039	.4111	.1184	.8256	.5329	.2401	.9473	.3618	.7763	.1907	.6052	.0197
812	.9972	.7044	.4117	.1189	.8262	.5334	.2407	.9479	.3624	.7769	.1914	.6059	.0204
426815	69.9977	71.7049	73.4122	75.1194	76.8267	78.5340	80.2412	81.9485	85.3630	88.7775	92.1920	95.6066	99.0211
818	.9982	.7054	.4127	.1200	.8272	.5345	.2418	.9491	.3636	.7781	.1927	.6072	.0218
821	.9986	.7059	.4132	.1205	.8278	.5351	.2423	.9496	.3642	.7788	.1933	.6079	.0225
824	.9991	.7064	.4137	.1210	.8283	.5356	.2429	.9502	.3648	.7794	.1940	.6086	.0232
827	.9996	.7069	.4142	.1216	.8289	.5362	.2435	.9508	.3654	.7800	.1946	.6092	.0239
426830	70.0001	71.7074	73.4148	75.1221	76.8294	78.5367	80.2440	81.9514	85.3660	88.7806	92.1953	95.6099	99.0246
833	.0006	.7079	.4153	.1226	.8299	.5373	.2446	.9519	.3666	.7813	.1959	.6106	.0253
836	.0011	.7084	.4158	.1231	.8305	.5378	.2452	.9525	.3672	.7819	.1966	.6113	.0260
839	.0016	.7090	.4163	.1237	.8310	.5384	.2457	.9531	.3678	.7825	.1972	.6119	.0266
842	.0021	.7095	.4168	.1242	.8316	.5389	.2463	.9537	.3684	.7831	.1979	.6126	.0273
426845	70.0026	71.7100	73.4173	75.1247	76.8321	78.5395	80.2469	81.9542	85.3690	88.7838	92.1985	95.6133	99.0280
848	.0031	.7105	.4179	.1252	.8326	.5400	.2474	.9548	.3696	.7844	.1992	.6140	.0287
851	.0036	.7110	.4184	.1258	.8332	.5406	.2480	.9554	.3702	.7850	.1998	.6146	.0294
854	.0041	.7115	.4189	.1263	.8337	.5411	.2486	.9560	.3708	.7856	.2005	.6153	.0301
857	.0045	.7120	.4194	.1268	.8343	.5417	.2491	.9565	.3714	.7863	.2011	.6160	.0308
426860	70.0050	71.7125	73.4199	75.1274	76.8348	78.5422	80.2497	81.9571	85.3720	88.7869	92.2018	95.6166	99.0315
863	.0055	.7130	.4204	.1279	.8353	.5428	.2502	.9577	.3726	.7875	.2024	.6173	.0322
866	.0060	.7135	.4210	.1284	.8359	.5433	.2508	.9583	.3732	.7881	.2031	.6180	.0329
869	.0065	.7140	.4215	.1289	.8364	.5439	.2514	.9588	.3738	.7888	.2037	.6187	.0336
872	.0070	.7145	.4220	.1295	.8370	.5444	.2519	.9594	.3744	.7894	.2044	.6193	.0343
426875	70.0075	71.7150	73.4225	75.1300	76.8375	78.5450	80.2525	81.9600	85.3750	88.7900	92.2050	95.6200	99.0350
878	.0080	.7155	.4230	.1305	.8380	.5456	.2531	.9606	.3756	.7906	.2056	.6207	.0357
881	.0085	.7160	.4235	.1311	.8386	.5461	.2536	.9612	.3762	.7912	.2063	.6213	.0364
884	.0090	.7165	.4240	.1316	.8391	.5467	.2542	.9617	.3768	.7919	.2069	.6220	.0371
887	.0095	.7170	.4246	.1321	.8397	.5472	.2548	.9623	.3774	.7925	.2076	.6227	.0378
426890	70.0100	71.7175	73.4251	75.1326	76.8402	78.5478	80.2553	81.9629	85.3780	88.7931	92.2082	95.6234	99.0385
893	.0105	.7180	.4256	.1332	.8407	.5483	.2559	.9635	.3786	.7937	.2089	.6240	.0392
896	.0109	.7185	.4261	.1337	.8413	.5489	.2564	.9640	.3792	.7944	.2095	.6247	.0399
899	.0114	.7190	.4266	.1342	.8418	.5494	.2570	.9646	.3798	.7950	.2102	.6254	.0406
902	.0119	.7195	.4271	.1348	.8424	.5500	.2576	.9652	.3804	.7956	.2108	.6260	.0413
426905	70.0124	71.7200	73.4277	75.1353	76.8429	78.5505	80.2581	81.9658	85.3810	88.7962	92.2115	95.6267	99.0420
908	.0129	.7205	.4282	.1358	.8434	.5511	.2587	.9663	.3816	.7969	.2121	.6274	.0427
911	.0134	.7210	.4287	.1363	.8440	.5516	.2593	.9669	.3822	.7975	.2128	.6281	.0434
914	.0139	.7216	.4292	.1369	.8445	.5522	.2598	.9675	.3828	.7981	.2134	.6287	.0440
917	.0144	.7221	.4297	.1374	.8451	.5527	.2604	.9681	.3834	.7987	.2141	.6294	.0447
426920	70.0149	71.7226	73.4302	75.1379	76.8456	78.5533	80.2610	81.9686	85.3840	88.7994	92.2147	95.6301	99.0454
923	.0154	.7231	.4308	.1384	.8461	.5538	.2615	.9692	.3846	.8000	.2154	.6308	.0461
926	.0159	.7236	.4313	.1390	.8467	.5544	.2621	.9698	.3852	.8006	.2160	.6314	.0468
929	.0164	.7241	.4318	.1395	.8472	.5549	.2627	.9704	.3858	.8012	.2167	.6321	.0475
932	.0168	.7246	.4323	.1400	.8478	.5555	.2632	.9709	.3864	.8019	.2173	.6328	.0482
426935	70.0173	71.7251	73.4328	75.1406	76.8483	78.5560	80.2638	81.9715	85.3870	88.8025	92.2180	95.6334	99.0489
938	.0178	.7256	.4333	.1411	.8488	.5566	.2643	.9721	.3876	.8031	.2186	.6341	.0496
941	.0183	.7261	.4339	.1416	.8494	.5571	.2649	.9727	.3882	.8037	.2193	.6348	.0503
944	.0188	.7266	.4344	.1421	.8499	.5577	.2655	.9732	.3888	.8044	.2199	.6355	.0510
947	.0193	.7271	.4349	.1427	.8505	.5582	.2660	.9738	.3894	.8050	.2206	.6361	.0517
426950	70.0198	71.7276	73.4354	75.1432	76.8510	78.5588	80.2666	81.9744	85.3900	88.8056	92.2212	95.6368	99.0524
953	.0203	.7281	.4359	.1437	.8515	.5594	.2672	.9750	.3906	.8062	.2218	.6375	.0531
956	.0208	.7286	.4364	.1443	.8521	.5599	.2677	.9756	.3912	.8068	.2225	.6381	.0538
959	.0213	.7291	.4369	.1448	.8526	.5605	.2683	.9761	.3918	.8075	.2231	.6388	.0545
962	.0218	.7296	.4375	.1453	.8532	.5610	.2689	.9767	.3924	.8081	.2238	.6395	.0552
426965	70.0223	71.7301	73.4380	75.1458	76.8537	78.5616	80.2694	81.9773	85.3930	88.8087	92.2244	95.6402	99.0559
968	.0228	.7306	.4385	.1464	.8542	.5621	.2700	.9779	.3936	.8093	.2251	.6408	.0566
971	.0232	.7311	.4390	.1469	.8548	.5627	.2705	.9784	.3942	.8100	.2257	.6415	.0573
974	.0237	.7316	.4395	.1474	.8553	.5632	.2711	.9790	.3948	.8106	.2264	.6422	.0580
977	.0242	.7321	.4400	.1480	.8559	.5638	.2717	.9796	.3954	.8112	.2270	.6428	.0587
426980	70.0247	71.7326	73.4406	75.1485	76.8564	78.5643	80.2722	81.9802	85.3960	88.8118	92.2277	95.6435	99.0594
983	.0252	.7331	.4411	.1490	.8569	.5649	.2728	.9807	.3966	.8125	.2283	.6442	.0601
986	.0257	.7336	.4416	.1495	.8575	.5654	.2734	.9813	.3972	.8131	.2290	.6449	.0608
989	.0262	.7342	.4421	.1501	.8580	.5660	.2739	.9819	.3978	.8137	.2296	.6455	.0614
992	.0267	.7347	.4426	.1506	.8586	.5665	.2745	.9825	.3984	.8143	.2303	.6462	.0621
426995	70.0272	71.7352	73.4431	75.1511	76.8591	78.5671	80.2751	81.9830	85.3990	88.8150	92.2309	95.6569	99.0628
998	.0277	.7357	.4437	.1516	.8596	.5676	.2756	.9836	.3996	.8156	.2316	.6476	.0635
427001	.0282	.7362	.4442	.1522	.8602	.5682	.2762	.9842	.4002	.8162	.2322	.6482	.0642
004	.0287	.7367	.4447	.1527	.8607	.5687	.2768	.9848	.4008	.8168	.2329	.6489	.0649
007	.0291	.7372	.4452	.1532	.8613	.5693	.2773	.9853	.4014	.8175	.2335	.6496	.0656
427010	70.0296	71.7377	73.4457	75.1538	76.8618	78.5698	80.2779	81.9859	85.4020	88.8181	92.2342	95.6502	99.0663
013	.0301	.7382	.4462	.1543	.8623	.5704	.2784	.9865	.4026	.8187	.2348	.6509	.0670
016	.0306	.7387	.4468	.1548	.8629	.5709	.2790	.9871	.4032	.8193	.2355	.6516	.0677
019	.0311	.7392	.4473	.1553	.8634	.5715	.2796	.9876	.4038	.8200	.2361	.6523	.0684
022	.0316	.7397	.4478	.1559	.8640	.5720	.2801	.9882	.4044	.8206	.2368	.6529	.0691
427025	70.0321	71.7402	73.4483	75.1564	76.8645	78.5726	80.2807	81.9888	85.4050	88.8212	92.2374	95.6536	99.0698
028	.0326	.7407	.4488	.1569	.8650	.5732	.2813	.9894	.4056	.8218	.2380	.6543	.0705
031	.0331	.7412	.4493	.1575	.8656	.5737	.2818	.9900	.4062	.8224	.2387	.6549	.0712
034	.0336	.7417	.4498	.1580	.8661	.5743	.2824	.9905	.4068	.8231	.2393	.6556	.0719
037	.0341	.7422	.4504	.1585	.8667	.5748	.2830	.9911	.4074	.8237	.2400	.6563	.0726
427040	70.0346	71.7427	73.4509	75.1590	76.8672	78.5754	80.2835	81.9917	85.4080	88.8243	92.2406	95.6570	99.0733
043	.0351	.7432	.4514	.1596	.8677	.5759	.2841	.9923	.4086	.8249	.2413	.6576	.0740
046	.0355	.7437	.4519	.1601	.8683	.5765	.2846	.9928	.4092	.8256	.2419	.6583	.0747
049	.0360	.7442	.4524	.1606	.8688	.5770	.2852	.9934	.4098	.8262	.2426	.6590	.0754
052	.0365	.7447	.4529	.1612	.8694	.5776	.2858	.9940	.4104	.8268	.2432	.6596	.0761
427055	70.0370	71.7452	73.4535	75.1617	76.8699	78.5781	80.2863	81.9946	85.4110	88.8274	92.2439	95.6603	99.0768
058	.0375	.7457	.4540	.1622	.8704	.5787	.2869	.9951	.4116	.8281	.2445	.6610	.0775
061	.0380	.7362	.4545	.1627	.8710	.5792	.2875	.9957	.4122	.8287	.2452	.6617	.0782
064	.0385	.7468	.4550	.1633	.8715	.5798	.2880	.9963	.4128	.8293	.2458	.6623	.0788
067	.0390	.7473	.4555	.1638	.8721	.5803	.2886	.9969	.4134	.8299	.2465	.6630	.0795
427070	70.0395	71.7478	73.4560	75.1643	76.8726	78.5809	80.2892	81.9974	85.4140	88.8306	92.2471	95.6637	99.0802
073	.0400	.7483	.4566	.1648	.8731	.5814	.2897	.9980	.4146	.8312	.2478	.6644	.0809
076	.0405	.7488	.4571	.1654	.8737	.5820	.2903	.9986	.4152	.8318	.2484	.6650	.0816
079	.0410	.7493	.4576	.1659	.8742	.5825	.2909	.9992	.4158	.8324	.2491	.6657	.0823
082	.0414	.7498	.4581	.1664	.8748	.5831	.2914	.9997	.4164	.8331	.2497	.6664	.0830
427085	70.0419	71.7503	73.4586	75.1670	76.8753	78.5836	80.2920	82.0003	85.4170	88.8337	92.2504	95.6670	99.0837
088	.0424	.7508	.4591	.1675	.8758	.5842	.2925	.0009	.4176	.8343	.2510	.6677	.0844
091	.0429	.7513	.4597	.1680	.8764	.5847	.2931	.0015	.4182	.8349	.2517	.6684	.0851
094	.0434	.7518	.4602	.1685	.8769	.5853	.2937	.0020	.4188	.8356	.2523	.6691	.0858
097	.0439	.7523	.4607	.1691	.8775	.5858	.2942	.0026	.4194	.8362	.2530	.6697	.0865
427100	70.0444	71.7528	73.4612	75.1696	76.8780	78.5864	80.2948	82.0032	85.4200	88.8368	92.2536	95.6704	99.0872

R

MEGACYCLES PER SECOND

H A R M O N I C S

BASIC FREQ.	112	116	120	124	128	132	136	140	144	148	152	156	160
427100	47.8352	49.5436	51.2520	52.9604	54.6688	56.3772	58.0856	59.7940	61.5024	63.2108	64.9192	66.6276	68.3360
103	.8355	.5439	.2524	.9608	.6692	.3776	.0860	.7944	.5028	.2112	.9197	.6281	.3365
106	.8359	.5443	.2527	.9611	.6696	.3780	.0864	.7948	.5033	.2117	.9201	.6285	.3370
109	.8362	.5446	.2531	.9615	.6700	.3784	.0868	.7953	.5037	.2121	.9206	.6290	.3374
112	.8365	.5450	.2534	.9619	.6703	.3788	.0872	.7957	.5041	.2126	.9210	.6295	.3379
427115	47.8369	49.5453	51.2538	52.9623	54.6707	56.3792	58.0876	59.7961	61.5046	63.2130	64.9215	66.6299	68.3384
118	.8372	.5457	.2542	.9626	.6711	.3796	.0880	.7965	.5050	.2135	.9219	.6304	.3389
121	.8376	.5460	.2545	.9630	.6715	.3800	.0885	.7969	.5054	.2139	.9224	.6309	.3394
124	.8379	.5464	.2549	.9634	.6719	.3804	.0889	.7974	.5059	.2144	.9228	.6313	.3398
127	.8382	.5467	.2552	.9637	.6723	.3808	.0893	.7978	.5063	.2148	.9233	.6318	.3403
427130	47.8386	49.5471	51.2556	52.9641	54.6726	56.3812	58.0897	59.7982	61.5067	63.2152	64.9238	66.6323	68.3408
133	.8389	.5474	.2560	.9645	.6730	.3816	.0901	.7986	.5072	.2157	.9242	.6327	.3413
136	.8392	.5478	.2563	.9649	.6734	.3820	.0905	.7990	.5076	.2161	.9247	.6332	.3418
139	.8396	.5481	.2567	.9652	.6738	.3823	.0909	.7995	.5080	.2166	.9251	.6337	.3422
142	.8399	.5485	.2570	.9656	.6742	.3827	.0913	.7999	.5084	.2170	.9256	.6342	.3427
427145	47.8402	49.5488	51.2574	52.9660	54.6746	56.3831	58.0917	59.8003	61.5089	63.2175	64.9260	66.6346	68.3432
148	.8406	.5492	.2578	.9664	.6749	.3835	.0921	.8007	.5093	.2179	.9265	.6351	.3437
151	.8409	.5495	.2581	.9667	.6753	.3839	.0925	.8011	.5097	.2183	.9270	.6356	.3442
154	.8412	.5499	.2585	.9671	.6757	.3843	.0929	.8016	.5102	.2188	.9274	.6360	.3446
157	.8416	.5502	.2588	.9675	.6761	.3847	.0934	.8020	.5106	.2192	.9279	.6365	.3451
427160	47.8419	49.5506	51.2592	52.9678	54.6765	56.3851	58.0938	59.8024	61.5110	63.2197	64.9283	66.6370	68.3456
163	.8423	.5509	.2596	.9682	.6769	.3855	.0942	.8028	.5115	.2201	.9288	.6374	.3461
166	.8426	.5513	.2599	.9686	.6772	.3859	.0946	.8032	.5119	.2206	.9292	.6379	.3466
169	.8429	.5516	.2603	.9690	.6776	.3863	.0950	.8037	.5123	.2210	.9297	.6384	.3470
172	.8433	.5520	.2606	.9693	.6780	.3867	.0954	.8041	.5128	.2215	.9301	.6388	.3475
427175	47.8436	49.5523	51.2610	52.9697	54.6784	56.3871	58.0958	59.8045	61.5132	63.2219	64.9306	66.6393	68.3480
178	.8439	.5526	.2614	.9701	.6788	.3875	.0962	.8049	.5136	.2223	.9311	.6398	.3485
181	.8443	.5530	.2617	.9704	.6792	.3879	.0966	.8053	.5141	.2228	.9315	.6402	.3490
184	.8446	.5533	.2621	.9708	.6796	.3883	.0970	.8058	.5145	.2232	.9320	.6407	.3494
187	.8449	.5537	.2624	.9712	.6799	.3887	.0974	.8062	.5149	.2237	.9324	.6412	.3499
427190	47.8453	49.5540	51.2628	52.9716	54.6803	56.3891	58.0978	59.8066	61.5154	63.2241	64.9329	66.6416	68.3504
193	.8456	.5544	.2632	.9719	.6807	.3895	.0982	.8070	.5158	.2246	.9333	.6421	.3509
196	.8460	.5547	.2635	.9723	.6811	.3899	.0987	.8074	.5162	.2250	.9338	.6426	.3514
199	.8463	.5551	.2639	.9727	.6815	.3903	.0991	.8079	.5167	.2255	.9342	.6430	.3518
202	.8466	.5554	.2642	.9730	.6819	.3907	.0995	.8083	.5171	.2259	.9347	.6435	.3523
427205	47.8470	49.5558	51.2646	52.9734	54.6822	56.3911	58.0999	59.8087	61.5175	63.2263	64.9352	66.6440	68.3528
208	.8473	.5561	.2650	.9738	.6826	.3915	.1003	.8091	.5180	.2268	.9356	.6444	.3533
211	.8476	.5565	.2653	.9742	.6830	.3919	.1007	.8095	.5184	.2272	.9361	.6449	.3538
214	.8480	.5568	.2657	.9745	.6834	.3922	.1011	.8100	.5188	.2277	.9365	.6454	.3542
217	.8483	.5572	.2660	.9749	.6838	.3926	.1015	.8104	.5192	.2281	.9370	.6459	.3547
427220	47.8486	49.5575	51.2664	52.9753	54.6842	56.3930	58.1019	59.8108	61.5197	63.2286	64.9374	66.6463	68.3552
223	.8490	.5579	.2668	.9757	.6845	.3934	.1023	.8112	.5201	.2290	.9379	.6468	.3557
226	.8493	.5582	.2671	.9760	.6849	.3938	.1027	.8116	.5205	.2294	.9384	.6473	.3562
229	.8496	.5586	.2675	.9764	.6853	.3942	.1031	.8121	.5210	.2299	.9388	.6477	.3566
232	.8500	.5589	.2678	.9768	.6857	.3946	.1036	.8125	.5214	.2303	.9393	.6482	.3571
427235	47.8503	49.5593	51.2682	52.9771	54.6861	56.3950	58.1040	59.8129	61.5218	63.2308	64.9397	66.6487	68.3576
238	.8507	.5596	.2686	.9775	.6865	.3954	.1044	.8133	.5223	.2312	.9402	.6491	.3581
241	.8510	.5600	.2689	.9779	.6868	.3958	.1048	.8137	.5227	.2317	.9406	.6496	.3586
244	.8513	.5603	.2693	.9783	.6872	.3962	.1052	.8142	.5231	.2321	.9411	.6501	.3590
247	.8517	.5607	.2696	.9786	.6876	.3966	.1056	.8146	.5236	.2326	.9415	.6505	.3595
427250	47.8520	49.5610	51.2700	52.9790	54.6880	56.3970	58.1060	59.8150	61.5240	63.2330	64.9420	66.6510	68.3600
253	.8523	.5613	.2704	.9794	.6884	.3974	.1064	.8154	.5244	.2334	.9425	.6515	.3605
256	.8527	.5617	.2707	.9797	.6888	.3978	.1068	.8158	.5249	.2339	.9429	.6519	.3610
259	.8530	.5620	.2711	.9801	.6892	.3982	.1072	.8163	.5253	.2343	.9434	.6524	.3614
262	.8533	.5624	.2714	.9805	.6895	.3986	.1076	.8167	.5257	.2348	.9438	.6529	.3619
427265	47.8537	49.5627	51.2718	52.9809	54.6899	56.3990	58.1080	59.8171	61.5262	63.2352	64.9443	66.6533	68.3624
268	.8540	.5631	.2722	.9812	.6903	.3994	.1084	.8175	.5266	.2357	.9447	.6538	.3629
271	.8544	.5634	.2725	.9816	.6907	.3998	.1089	.8179	.5270	.2361	.9452	.6543	.3634
274	.8547	.5638	.2729	.9820	.6911	.4002	.1093	.8184	.5275	.2366	.9456	.6547	.3638
277	.8550	.5641	.2732	.9823	.6915	.4006	.1097	.8188	.5279	.2370	.9461	.6552	.3643
427280	47.8554	49.5645	51.2736	52.9827	54.6918	56.4010	58.1101	59.8192	61.5283	63.2374	64.9466	66.6557	68.3648
283	.8557	.5648	.2740	.9831	.6922	.4014	.1105	.8196	.5288	.2379	.9470	.6561	.3653
286	.8560	.5652	.2743	.9835	.6926	.4018	.1109	.8200	.5292	.2383	.9475	.6566	.3658
289	.8564	.5655	.2747	.9838	.6930	.4021	.1113	.8205	.5296	.2388	.9479	.6571	.3662
292	.8567	.5659	.2750	.9842	.6934	.4025	.1117	.8209	.5300	.2392	.9484	.6576	.3667
427295	47.8570	49.5662	51.2754	52.9846	54.6938	56.4029	58.1121	59.8213	61.5305	63.2397	64.9488	66.6580	68.3672
298	.8574	.5666	.2758	.9850	.6941	.4033	.1125	.8217	.5309	.2401	.9493	.6585	.3677
301	.8577	.5669	.2761	.9853	.6945	.4037	.1129	.8221	.5313	.2405	.9498	.6590	.3682
304	.8580	.5673	.2765	.9857	.6949	.4041	.1133	.8226	.5318	.2410	.9502	.6594	.3686
307	.8584	.5676	.2768	.9861	.6953	.4045	.1138	.8230	.5322	.2414	.9507	.6599	.3691
427310	47.8587	49.5680	51.2772	52.9864	54.6957	56.4049	58.1142	59.8234	61.5326	63.2419	64.9511	66.6604	68.3696
313	.8591	.5683	.2776	.9868	.6961	.4053	.1146	.8238	.5331	.2423	.9516	.6608	.3701
316	.8594	.5687	.2779	.9872	.6964	.4057	.1150	.8242	.5335	.2428	.9520	.6613	.3706
319	.8597	.5690	.2783	.9876	.6968	.4061	.1154	.8247	.5339	.2432	.9525	.6618	.3710
322	.8601	.5694	.2786	.9879	.6972	.4065	.1158	.8251	.5344	.2437	.9529	.6622	.3715
427325	47.8604	49.5697	51.2790	52.9883	54.6976	56.4069	58.1162	59.8255	61.5348	63.2441	64.9534	66.6627	68.3720
328	.8607	.5700	.2794	.9887	.6980	.4073	.1166	.8259	.5352	.2445	.9539	.6632	.3725
331	.8611	.5704	.2797	.9890	.6984	.4077	.1170	.8263	.5357	.2450	.9543	.6636	.3730
334	.8614	.5707	.2801	.9894	.6988	.4081	.1174	.8268	.5361	.2454	.9548	.6641	.3734
337	.8617	.5711	.2804	.9898	.6991	.4085	.1178	.8272	.5365	.2459	.9552	.6646	.3739
427340	47.8621	49.5714	51.2808	52.9902	54.6995	56.4089	58.1182	59.8276	61.5370	63.2463	64.9557	66.6650	68.3744
343	.8624	.5718	.2812	.9905	.6999	.4093	.1186	.8280	.5374	.2468	.9561	.6655	.3749
346	.8628	.5721	.2815	.9909	.7003	.4097	.1191	.8284	.5378	.2472	.9566	.6660	.3754
349	.8631	.5725	.2819	.9913	.7007	.4101	.1195	.8289	.5383	.2477	.9570	.6664	.3758
352	.8634	.5728	.2822	.9916	.7011	.4105	.1199	.8293	.5387	.2481	.9575	.6669	.3763
427355	47.8638	49.5732	51.2826	52.9920	54.7014	56.4109	58.1203	59.8297	61.5391	63.2485	64.9580	66.6674	68.3768
358	.8641	.5735	.2830	.9924	.7018	.4113	.1207	.8301	.5396	.2490	.9584	.6678	.3773
361	.8644	.5739	.2833	.9928	.7022	.4117	.1211	.8305	.5400	.2494	.9589	.6683	.3778
364	.8648	.5742	.2837	.9931	.7026	.4120	.1215	.8310	.5404	.2499	.9593	.6688	.3782
367	.8651	.5746	.2840	.9935	.7030	.4124	.1219	.8314	.5408	.2503	.9598	.6693	.3787
427370	47.8654	49.5749	51.2844	52.9939	54.7034	56.4128	58.1223	59.8318	61.5413	63.2508	64.9602	66.6697	68.3792
373	.8658	.5753	.2848	.9943	.7037	.4132	.1227	.8322	.5417	.2512	.9607	.6702	.3797
376	.8661	.5756	.2851	.9946	.7041	.4136	.1231	.8326	.5421	.2516	.9612	.6707	.3802
379	.8664	.5760	.2855	.9950	.7045	.4140	.1235	.8331	.5426	.2521	.9616	.6711	.3806
382	.8668	.5763	.2858	.9954	.7049	.4144	.1240	.8335	.5430	.2525	.9621	.6716	.3811
427385	47.8671	49.5767	51.2862	52.9957	54.7053	56.4148	58.1244	59.8339	61.5434	63.2530	64.9625	66.6721	68.3816
388	.8675	.5770	.2866	.9961	.7057	.4152	.1248	.8343	.5439	.2534	.9630	.6725	.3821
391	.8678	.5774	.2869	.9965	.7060	.4156	.1252	.8347	.5443	.2539	.9634	.6730	.3826
394	.8681	.5777	.2873	.9969	.7064	.4160	.1256	.8352	.5447	.2543	.9639	.6735	.3830
397	.8685	.5781	.2876	.9972	.7068	.4164	.1260	.8356	.5452	.2548	.9643	.6739	.3835
427400	47.8688	49.5784	51.2880	52.9976	54.7072	56.4168	58.1264	59.8360	61.5456	63.2552	64.9648	66.6744	68.3840

MEGACYCLES PER SECOND

H A R M O N I C S

BASIC FREQ.	164	168	172	176	180	184	188	192	200	208	216	224	232
427100	70.0444	71.7528	73.4612	75.1696	76.8780	78.5864	80.2948	82.0032	85.4200	88.8368	92.2536	95.6704	99.0872
103	.0449	.7433	.4617	.1701	.8785	.5870	.2954	.0038	.4206	.8374	.2542	.6711	.0879
106	.0454	.7538	.4622	.1707	.8791	.5875	.2959	.0044	.4212	.8380	.2549	.6717	.0886
109	.0459	.7543	.4627	.1712	.8796	.5881	.2965	.0049	.4218	.8387	.2555	.6724	.0893
112	.0464	.7548	.4633	.1717	.8802	.5886	.2971	.0055	.4224	.8393	.2562	.6731	.0900
427115	70.0469	71.7553	73.4638	75.1722	76.8807	78.5892	80.2976	82.0061	85.4230	88.8399	92.2568	95.6738	99.0907
118	.0474	.7558	.4643	.1728	.8812	.5897	.2982	.0067	.4236	.8405	.2575	.6744	.0914
121	.0478	.7563	.4648	.1733	.8818	.5903	.2987	.0072	.4242	.8412	.2581	.6751	.0921
124	.0483	.7568	.4653	.1738	.8823	.5908	.2993	.0078	.4248	.8418	.2588	.6758	.0928
127	.0488	.7573	.4658	.1744	.8829	.5914	.2999	.0084	.4254	.8424	.2594	.6764	.0935
427130	70.0493	71.7578	73.4664	75.1749	76.8834	78.5919	80.3004	82.0090	85.4260	88.8430	92.2601	95.6771	99.0942
133	.0498	.7583	.4669	.1754	.8839	.5925	.3010	.0095	.4266	.8437	.2607	.6778	.0949
136	.0503	.7588	.4674	.1759	.8845	.5930	.3016	.0101	.4272	.8443	.2614	.6785	.0956
139	.0508	.7594	.4679	.1765	.8850	.5936	.3021	.0107	.4278	.8449	.2620	.6791	.0962
142	.0513	.7599	.4684	.1770	.8856	.5941	.3027	.0113	.4284	.8455	.2627	.6798	.0969
427145	70.0518	71.7604	73.4689	75.1775	76.8861	78.5947	80.3033	82.0118	85.4290	88.8462	92.2633	95.6805	99.0976
148	.0523	.7609	.4695	.1780	.8866	.5952	.3038	.0124	.4296	.8468	.2640	.6812	.0983
151	.0528	.7614	.4700	.1786	.8872	.5958	.3044	.0130	.4302	.8474	.2646	.6818	.0990
154	.0533	.7619	.4705	.1791	.8877	.5963	.3050	.0136	.4308	.8480	.2653	.6825	.0997
157	.0537	.7624	.4710	.1796	.8883	.5969	.3055	.0141	.4314	.8487	.2659	.6832	.1004
427160	70.0542	71.7629	73.4715	75.1802	76.8888	78.5974	80.3061	82.0147	85.4320	88.8493	92.2666	95.6838	99.1011
163	.0547	.7634	.4720	.1807	.8893	.5980	.3066	.0153	.4326	.8499	.2672	.6845	.1018
166	.0552	.7639	.4726	.1812	.8899	.5985	.3072	.0159	.4332	.8505	.2679	.6852	.1025
169	.0557	.7644	.4731	.1817	.8904	.5991	.3078	.0164	.4338	.8512	.2685	.6859	.1032
172	.0562	.7649	.4736	.1823	.8910	.5996	.3083	.0170	.4344	.8518	.2692	.6865	.1039
427175	70.0567	71.7654	73.4741	75.1828	76.8915	78.6002	80.3089	82.0176	85.4350	88.8524	92.2698	95.6872	99.1046
178	.0572	.7659	.4746	.1833	.8920	.6008	.3095	.0182	.4356	.8530	.2704	.6879	.1053
181	.0577	.7664	.4751	.1839	.8926	.6013	.3100	.0188	.4362	.8536	.2711	.6885	.1060
184	.0582	.7669	.4756	.1844	.8931	.6019	.3106	.0193	.4368	.8543	.2717	.6892	.1067
187	.0587	.7674	.4762	.1849	.8937	.6024	.3112	.0199	.4374	.8549	.2724	.6899	.1074
427190	70.0592	71.7679	73.4767	75.1854	76.8942	78.6030	80.3117	82.0205	85.4380	88.8555	92.2730	95.6906	99.1081
193	.0597	.7684	.4772	.1860	.8947	.6035	.3123	.0211	.4386	.8561	.2737	.6912	.1088
196	.0601	.7689	.4777	.1865	.8953	.6041	.3128	.0216	.4392	.8568	.2743	.6919	.1095
199	.0606	.7694	.4782	.1870	.8958	.6046	.3134	.0222	.4398	.8574	.2750	.6926	.1102
202	.0611	.7699	.4787	.1876	.8964	.6052	.3140	.0228	.4404	.8580	.2756	.6932	.1109
427205	70.0616	71.7704	73.4793	75.1881	76.8969	78.6057	80.3145	82.0234	85.4410	88.8586	92.2763	95.6939	99.1116
208	.0621	.7709	.4798	.1886	.8974	.6063	.3151	.0239	.4416	.8593	.2769	.6946	.1123
211	.0626	.7714	.4803	.1891	.8980	.6068	.3157	.0245	.4422	.8599	.2776	.6953	.1130
214	.0631	.7720	.4808	.1897	.8985	.6074	.3162	.0251	.4428	.8605	.2782	.6959	.1136
217	.0636	.7725	.4813	.1902	.8991	.6079	.3168	.0257	.4434	.8611	.2789	.6966	.1143
427220	70.0641	71.7730	73.4818	75.1907	76.8996	78.6085	80.3174	82.0262	85.4440	88.8618	92.2795	95.6973	99.1150
223	.0646	.7735	.4824	.1912	.9001	.6090	.3179	.0268	.4446	.8624	.2802	.6980	.1157
226	.0651	.7740	.4829	.1918	.9007	.6096	.3185	.0274	.4452	.8630	.2808	.6986	.1164
229	.0656	.7745	.4834	.1923	.9012	.6101	.3191	.0280	.4458	.8636	.2815	.6993	.1171
232	.0660	.7750	.4839	.1928	.9018	.6107	.3196	.0285	.4464	.8643	.2821	.7000	.1178
427235	70.0665	71.7755	73.4844	75.1934	76.9023	78.6112	80.3202	82.0291	85.4470	88.8649	92.2828	95.7006	99.1185
238	.0670	.7760	.4849	.1939	.9028	.6118	.3207	.0297	.4476	.8655	.2834	.7013	.1192
241	.0675	.7765	.4855	.1944	.9034	.6123	.3213	.0303	.4482	.8661	.2841	.7020	.1199
244	.0680	.7770	.4860	.1949	.9039	.6129	.3219	.0308	.4488	.8668	.2847	.7027	.1206
247	.0685	.7775	.4865	.1955	.9045	.6134	.3224	.0314	.4494	.8674	.2854	.7033	.1213
427250	70.0690	71.7780	73.4870	75.1960	76.9050	78.6140	80.3230	82.0320	85.4500	88.8680	92.2860	95.7040	99.1220
253	.0695	.7785	.4875	.1965	.9055	.6146	.3236	.0326	.4506	.8686	.2866	.7047	.1227
256	.0700	.7790	.4880	.1971	.9061	.6151	.3241	.0332	.4512	.8692	.2873	.7053	.1234
259	.0705	.7795	.4885	.1976	.9066	.6157	.3247	.0337	.4518	.8699	.2879	.7060	.1241
262	.0710	.7800	.4891	.1981	.9072	.6162	.3253	.0343	.4524	.8705	.2886	.7067	.1248
427265	70.0715	71.7805	73.4896	75.1986	76.9077	78.6168	80.3258	82.0349	85.4530	88.8711	92.2892	95.7074	99.1255
268	.0720	.7810	.4901	.1992	.9082	.6173	.3264	.0355	.4536	.8717	.2899	.7080	.1262
271	.0724	.7815	.4906	.1997	.9088	.6179	.3269	.0360	.4542	.8724	.2905	.7087	.1269
274	.0729	.7820	.4911	.2002	.9093	.6184	.3275	.0366	.4548	.8730	.2912	.7094	.1276
277	.0734	.7825	.4916	.2008	.9099	.6190	.3281	.0372	.4554	.8736	.2918	.7100	.1283
427280	70.0739	71.7830	73.4922	75.2013	76.9104	78.6195	80.3286	82.0378	85.4560	88.8742	92.2925	95.7107	99.1290
283	.0744	.7835	.4927	.2018	.9109	.6201	.3292	.0383	.4566	.8749	.2931	.7114	.1297
286	.0749	.7840	.4932	.2023	.9115	.6206	.3298	.0389	.4572	.8755	.2938	.7121	.1304
289	.0754	.7846	.4937	.2029	.9120	.6212	.3303	.0395	.4578	.8761	.2944	.7127	.1310
292	.0759	.7851	.4942	.2034	.9126	.6217	.3309	.0401	.4584	.8767	.2951	.7134	.1317
427295	70.0764	71.7856	73.4947	75.2039	76.9131	78.6223	80.3315	82.0406	85.4590	88.8774	92.2957	95.7141	99.1324
298	.0769	.7861	.4953	.2044	.9136	.6228	.3320	.0412	.4596	.8780	.2964	.7148	.1331
301	.0774	.7866	.4958	.2050	.9142	.7234	.3326	.0418	.4602	.8786	.2970	.7154	.1338
304	.0779	.7871	.4963	.2055	.9147	.6239	.3332	.0424	.4608	.8792	.2977	.7161	.1345
307	.0783	.7876	.4968	.2060	.9153	.6245	.3337	.0429	.4614	.8799	.2983	.7168	.1352
427310	70.0788	71.7881	73.4973	75.2066	76.9158	78.6250	80.3343	82.0435	85.4620	88.8805	92.2990	95.7174	99.1359
313	.0793	.7886	.4978	.2071	.9163	.6256	.3348	.0441	.4626	.8811	.2996	.7181	.1366
316	.0798	.7891	.4984	.2076	.9169	.6261	.3354	.0447	.4632	.8817	.3003	.7188	.1373
319	.0803	.7896	.4989	.2081	.9174	.6267	.3360	.0452	.4638	.8824	.3009	.7195	.1380
322	.0808	.7901	.4994	.2087	.9180	.6272	.3365	.0458	.4644	.8830	.3016	.7201	.1387
427325	70.0813	71.7906	73.4999	75.2092	76.9185	78.6278	80.3371	82.0464	85.4650	88.8836	92.3022	95.7208	99.1394
328	.0818	.7911	.5004	.2097	.9190	.6284	.3377	.0470	.4656	.8842	.3028	.7215	.1401
331	.0823	.7916	.5009	.2103	.9196	.6289	.3382	.0476	.4662	.8848	.3035	.7221	.1408
334	.0828	.7921	.5014	.2108	.9201	.6295	.3388	.0481	.4668	.8855	.3041	.7228	.1415
337	.0833	.7926	.5020	.2113	.9207	.6300	.3394	.0487	.4674	.8861	.3048	.7235	.1422
427340	70.0838	71.7931	73.5025	75.2118	76.9212	78.6306	80.3399	82.0493	85.4680	88.8867	92.3054	95.7242	99.1429
343	.0843	.7936	.5030	.2124	.9217	.6311	.3405	.0499	.4686	.8873	.3061	.7248	.1436
346	.0847	.7941	.5035	.2129	.9223	.6317	.3410	.0504	.4692	.8880	.3067	.7255	.1443
349	.0852	.7946	.5040	.2134	.9228	.6322	.3416	.0510	.4698	.8886	.3074	.7262	.1450
352	.0857	.7951	.5045	.2140	.9234	.6328	.3422	.0516	.4704	.8892	.3080	.7268	.1457
427355	70.0862	71.7956	73.5051	75.2145	76.9239	78.6333	80.3427	82.0522	85.4710	88.8898	92.3087	95.7275	99.1464
358	.0867	.7961	.5056	.2150	.9244	.6339	.3433	.0527	.4716	.8905	.3093	.7282	.1471
361	.0872	.7966	.5061	.2155	.9250	.6344	.3439	.0533	.4722	.8911	.3100	.7289	.1478
364	.0877	.7972	.5066	.2161	.9255	.6350	.3444	.0539	.4728	.8917	.3106	.7295	.1484
367	.0882	.7977	.5071	.2166	.9261	.6355	.3450	.0545	.4734	.8923	.3113	.7302	.1491
427370	70.0887	71.7982	73.5076	75.2171	76.9266	78.6361	80.3456	82.0550	85.4740	88.8930	92.3119	95.7309	99.1498
373	.0892	.7987	.5082	.2176	.9271	.6366	.3461	.0556	.4746	.8936	.3126	.7316	.1505
376	.0897	.7992	.5087	.2182	.9277	.6372	.3467	.0562	.4752	.8942	.3132	.7322	.1512
379	.0902	.7997	.5092	.2187	.9282	.6377	.3473	.0568	.4758	.8948	.3139	.7329	.1519
382	.0906	.8002	.5097	.2192	.9288	.6383	.3478	.0573	.4764	.8955	.3145	.7336	.1526
427385	70.0911	71.8007	73.5102	75.2198	76.9293	78.6388	80.3484	82.0579	85.4770	88.8961	92.3152	95.7342	99.1533
388	.0916	.8012	.5107	.2203	.9298	.6394	.3489	.0585	.4776	.8967	.3158	.7349	.1540
391	.0921	.8017	.5113	.2208	.9304	.6399	.3495	.0591	.4782	.8973	.3165	.7356	.1547
394	.0926	.8022	.5118	.2213	.9309	.6405	.3501	.0596	.4788	.8980	.3171	.7363	.1554
397	.0931	.8027	.5123	.2219	.9315	.6410	.3506	.0602	.4794	.8986	.3178	.7369	.1561
427400	70.0936	71.8032	73.5128	75.2224	76.9320	78.6416	80.3512	82.0608	85.4800	88.8992	92.3184	95.7376	99.1568

MEGACYCLES PER SECOND

HARMONICS

BASIC FREQ.	112	116	120	124	128	132	136	140	144	148	152	156	160
427400	47.8688	49.5784	51.2880	52.9976	54.7072	56.4168	58.1264	59.8360	61.5456	63.2552	64.9648	66.6744	68.3840
403	.8691	.5787	.2884	.9980	.7076	.4172	.1268	.8364	.5460	.2556	.9653	.6749	.3845
406	.8695	.5791	.2887	.9983	.7080	.4176	.1272	.8368	.5465	.2561	.9657	.6753	.3850
409	.8698	.5794	.2891	.9987	.7084	.4180	.1276	.8373	.5469	.2565	.9662	.6758	.3854
412	.8701	.5798	.2894	.9991	.7087	.4184	.1280	.8377	.5473	.2570	.9666	.6763	.3859
427415	47.8705	49.5801	51.2898	52.9995	54.7091	56.4188	58.1284	59.8381	61.5478	63.2574	64.9671	66.6767	68.3864
418	.8708	.5805	.2902	.9998	.7095	.4192	.1288	.8385	.5482	.2579	.9675	.6772	.3869
421	.8712	.5808	.2905	53.0002	.7099	.4196	.1293	.8389	.5486	.2583	.9680	.6777	.3874
424	.8715	.5812	.2909	.0006	.7103	.4200	.1297	.8394	.5491	.2588	.9684	.6781	.3878
427	.8718	.5815	.2912	.0009	.7107	.4204	.1301	.8398	.5495	.2592	.9689	.6786	.3883
427430	47.8722	49.5819	51.2916	53.0013	54.7110	56.4208	58.1305	59.8402	61.5499	63.2596	64.9694	66.6791	68.3888
433	.8725	.5822	.2920	.0017	.7114	.4212	.1309	.8406	.5504	.2601	.9698	.6795	.3893
436	.8728	.5826	.2923	.0021	.7118	.4216	.1313	.8410	.5508	.2605	.9703	.6800	.3898
439	.8732	.5829	.2927	.0024	.7122	.4219	.1317	.8415	.5512	.2610	.9707	.6805	.3902
442	.8735	.5833	.2930	.0028	.7126	.4223	.1321	.8419	.5516	.2614	.9712	.6810	.3907
427445	47.8738	49.5836	51.2934	53.0032	54.7130	56.4227	58.1325	59.8423	61.5521	63.2619	64.9716	66.6814	68.3912
448	.8742	.5840	.2938	.0036	.7133	.4231	.1329	.8427	.5525	.2623	.9721	.6819	.3917
451	.8745	.5843	.2941	.0039	.7137	.4235	.1333	.8431	.5529	.2627	.9726	.6824	.3922
454	.8748	.5847	.2945	.0043	.7141	.4239	.1337	.8436	.5534	.2632	.9730	.6828	.3926
457	.8752	.5850	.2948	.0047	.7145	.4243	.1342	.8440	.5538	.2636	.9735	.6833	.3931
427460	47.8755	49.5854	51.2952	53.0050	54.7149	56.4247	58.1346	59.8444	61.5542	63.2641	64.9739	66.6838	68.3936
463	.8759	.5857	.2956	.0054	.7153	.4251	.1350	.8448	.5547	.2645	.9744	.6842	.3941
466	.8762	.5861	.2959	.0058	.7156	.4255	.1354	.8452	.5551	.2650	.9748	.6847	.3946
469	.8765	.5864	.2963	.0062	.7160	.4259	.1358	.8457	.5555	.2654	.9753	.6852	.3950
472	.8769	.5868	.2966	.0065	.7164	.4263	.1362	.8461	.5560	.2659	.9757	.6856	.3955
427475	47.8772	49.5871	51.2970	53.0069	54.7168	56.4267	58.1366	59.8465	61.5564	63.2663	64.9762	66.6861	68.3960
478	.8775	.5874	.2974	.0073	.7172	.4271	.1370	.8469	.5568	.2667	.9767	.6866	.3965
481	.8779	.5878	.2977	.0076	.7176	.4275	.1374	.8473	.5573	.2672	.9771	.6870	.3970
484	.8782	.5881	.2981	.0080	.7180	.4279	.1378	.8478	.5577	.2676	.9776	.6875	.3974
487	.8785	.5885	.2984	.0084	.7183	.4283	.1382	.8482	.5581	.2681	.9780	.6880	.3979
427490	47.8789	49.5888	51.2988	53.0088	54.7187	56.4287	58.1386	59.8486	61.5586	63.2685	64.9785	66.6884	68.3984
493	.8792	.5892	.2992	.0091	.7191	.4291	.1390	.8490	.5590	.2690	.9789	.6889	.3989
496	.8796	.5895	.2995	.0095	.7195	.4295	.1395	.8494	.5594	.2694	.9794	.6894	.3994
499	.8799	.5899	.2999	.0099	.7199	.4299	.1399	.8499	.5599	.2699	.9798	.6898	.3998
502	.8802	.5902	.3002	.0102	.7203	.4303	.1403	.8503	.5603	.2703	.9803	.6903	.4003
427505	47.8806	49.5906	51.3006	53.0106	54.7206	56.4307	58.1407	59.8507	61.5607	63.2707	64.9808	66.6908	68.4008
508	.8809	.5909	.3010	.0110	.7210	.4311	.1411	.8511	.5612	.2712	.9812	.6912	.4013
511	.8812	.5913	.3013	.0114	.7214	.4315	.1415	.8515	.5616	.2716	.9817	.6917	.4018
514	.8816	.5916	.3017	.0117	.7218	.4318	.1419	.8520	.5620	.2721	.9821	.6922	.4022
517	.8819	.5920	.3020	.0121	.7222	.4322	.1423	.8524	.5624	.2725	.9826	.6927	.4027
427520	47.8822	49.5923	51.3024	53.0125	54.7226	56.4326	58.1427	59.8528	61.5629	63.2730	64.9830	66.6931	68.4032
523	.8826	.5927	.3028	.0129	.7229	.4330	.1431	.8532	.5633	.2734	.9835	.6936	.4037
526	.8829	.5930	.3031	.0132	.7233	.4334	.1435	.8536	.5637	.2738	.9840	.6941	.4042
529	.8832	.5934	.3035	.0136	.7237	.4338	.1439	.8541	.5642	.2743	.9844	.6945	.4046
532	.8836	.5937	.3038	.0140	.7241	.4342	.1444	.8545	.5646	.2747	.9849	.6950	.4051
427535	47.8839	49.5941	51.3042	53.0143	54.7245	56.4346	58.1448	59.8549	61.5650	63.2752	64.9853	66.6955	68.4056
538	.8843	.5944	.3046	.0147	.7249	.4350	.1452	.8553	.5655	.2756	.9858	.6959	.4061
541	.8846	.5948	.3049	.0151	.7252	.4354	.1456	.8557	.5659	.2761	.9862	.6964	.4066
544	.8849	.5951	.3053	.0155	.7256	.4358	.1460	.8562	.5663	.2765	.9867	.6969	.4070
547	.8853	.5955	.3056	.0158	.7260	.4362	.1464	.8566	.5668	.2770	.9871	.6973	.4075
427550	47.8856	49.5958	51.3060	53.0162	54.7264	56.4366	58.1468	59.8570	61.5672	63.2774	64.9876	66.6978	68.4080
553	.8859	.5961	.3064	.0166	.7268	.4370	.1472	.8574	.5676	.2778	.9881	.6983	.4085
556	.8863	.5965	.3067	.0169	.7272	.4374	.1476	.8578	.5681	.2783	.9885	.6987	.4090
559	.8866	.5968	.3071	.0173	.7276	.4378	.1480	.8583	.5685	.2787	.9890	.6992	.4094
562	.8869	.5972	.3074	.0177	.7279	.4382	.1484	.8587	.5689	.2792	.9894	.6997	.4099
427565	47.8873	49.5975	51.3078	53.0181	54.7283	56.4386	58.1488	59.8591	61.5694	63.2796	64.9899	66.7001	68.4104
568	.8876	.5979	.3082	.0184	.7287	.4390	.1492	.8595	.5698	.2801	.9903	.7006	.4109
571	.8880	.5982	.3085	.0188	.7291	.4394	.1497	.8599	.5702	.2805	.9908	.7011	.4114
574	.8883	.5986	.3089	.0192	.7295	.4398	.1501	.8604	.5707	.2810	.9912	.7015	.4118
577	.8886	.5989	.3092	.0195	.7299	.4402	.1505	.8608	.5711	.2814	.9917	.7020	.4123
427580	47.8890	49.5993	51.3096	53.0199	54.7302	56.4406	58.1509	59.8612	61.5715	63.2818	64.9922	66.7025	68.4128
583	.8893	.5996	.3100	.0203	.7306	.4410	.1513	.8616	.5720	.2823	.9926	.7029	.4133
586	.8896	.6000	.3103	.0207	.7310	.4414	.1517	.8620	.5724	.2827	.9931	.7034	.4138
589	.8900	.6003	.3107	.0210	.7314	.4417	.1521	.8625	.5728	.2832	.9935	.7039	.4142
592	.8903	.6007	.3110	.0214	.7318	.4421	.1525	.8629	.5732	.2836	.9940	.7044	.4147
427595	47.8906	49.6010	51.3114	53.0218	54.7322	56.4425	58.1529	59.8633	61.5737	63.2841	64.9944	66.7048	68.4152
598	.8910	.6014	.3118	.0222	.7325	.4429	.1533	.8637	.5741	.2845	.9949	.7053	.4157
601	.8913	.6017	.3121	.0225	.7329	.4433	.1537	.8641	.5745	.2849	.9954	.7058	.4162
604	.8916	.6021	.3125	.0229	.7333	.4437	.1541	.8646	.5750	.2854	.9958	.7062	.4166
607	.8920	.6024	.3128	.0233	.7337	.4441	.1546	.8650	.5754	.2858	.9963	.7067	.4171
427610	47.8923	49.6028	51.3132	53.0236	54.7341	56.4445	58.1550	59.8654	61.5758	63.2863	64.9967	66.7072	68.4176
613	.8927	.6031	.3136	.0240	.7345	.4449	.1554	.8658	.5763	.2867	.9972	.7076	.4181
616	.8930	.6035	.3139	.0244	.7348	.4453	.1558	.8662	.5767	.2872	.9976	.7081	.4186
619	.8933	.6038	.3143	.0248	.7352	.4457	.1562	.8667	.5771	.2876	.9981	.7086	.4190
622	.8937	.6042	.3146	.0251	.7356	.4461	.1566	.8671	.5776	.2881	.9985	.7090	.4195
427625	47.8940	49.6045	51.3150	53.0255	54.7360	56.4465	58.1570	59.8675	61.5780	53.2885	64.9990	66.7095	68.4200
628	.8943	.6048	.3154	.0259	.7364	.4469	.1574	.8679	.5784	.2889	.9995	.7100	.4205
631	.8947	.6052	.3157	.0262	.7368	.4473	.1578	.8683	.5789	.2894	.9999	.7104	.4210
634	.8950	.6055	.3161	.0266	.7372	.4477	.1582	.8688	.5793	.2898	65.0004	.7109	.4214
637	.8953	.6059	.3164	.0270	.7375	.4481	.1586	.8692	.5797	.2903	.0008	.7114	.4219
427640	47.8957	49.6062	51.3168	53.0274	54.7379	56.4485	58.1590	59.8696	61.5802	63.2907	65.0013	66.7118	68.4224
643	.8960	.6066	.3172	.0277	.7383	.4489	.1594	.8700	.5806	.2912	.0017	.7123	.4229
646	.8964	.6069	.3175	.0281	.7387	.4493	.1599	.8704	.5810	.2916	.0022	.7128	.4234
649	.8967	.6073	.3179	.0285	.7391	.4497	.1603	.8709	.5815	.2921	.0026	.7132	.4238
652	.8970	.6076	.3182	.0288	.7395	.4501	.1607	.8713	.5819	.2925	.0031	.7137	.4243
427655	47.8974	49.6080	51.3186	53.0292	54.7398	56.4505	58.1611	59.8717	61.5823	63.2929	65.0036	66.7142	68.4248
658	.8977	.6083	.3190	.0296	.7402	.4509	.1615	.8721	.5828	.2934	.0040	.7146	.4253
661	.8980	.6087	.3193	.0300	.7406	.4513	.1619	.8725	.5832	.2938	.0045	.7151	.4258
664	.8984	.6090	.3197	.0303	.7410	.4516	.1623	.8730	.5836	.2943	.0049	.7156	.4262
667	.8987	.6094	.3200	.0307	.7414	.4520	.1627	.8734	.5840	.2947	.0054	.7161	.4267
427670	47.8990	49.6097	51.3204	53.0311	54.7418	56.4524	58.1631	59.8738	61.5845	63.2952	65.0058	66.7165	68.4272
673	.8994	.6101	.3208	.0315	.7421	.4528	.1635	.8742	.5849	.2956	.0063	.7170	.4277
676	.8997	.6104	.3211	.0318	.7425	.4532	.1639	.8746	.5853	.2960	.0068	.7175	.4282
679	.9000	.6108	.3215	.0322	.7429	.4536	.1643	.8751	.5858	.2965	.0072	.7179	.4286
682	.9004	.6111	.3218	.0326	.7433	.4540	.1648	.8755	.5862	.2969	.0077	.7184	.4291
427685	47.9007	49.6115	51.3222	53.0329	54.7437	56.4544	58.1652	59.8759	61.5866	63.2974	65.0081	66.7189	68.4296
688	.9011	.6118	.3226	.0333	.7441	.4548	.1656	.8763	.5871	.2978	.0086	.7193	.4301
691	.9014	.6122	.3229	.0337	.7444	.4552	.1660	.8767	.5875	.2983	.0090	.7198	.4306
694	.9017	.6125	.3233	.0341	.7448	.4556	.1664	.8772	.5879	.2987	.0095	.7203	.4310
697	.9021	.6129	.3236	.0344	.7452	.4560	.1668	.8776	.5884	.2992	.0099	.7207	.4315
427700	47.9024	49.6132	51.3240	53.0348	54.7456	56.4564	58.1672	59.8780	61.5888	63.2996	65.0104	66.7212	68.4320

MEGACYCLES PER SECOND

HARMONICS

BASIC FREQ.	164	168	172	176	180	184	188	192	200	208	216	224	232
427400	70.0936	71.8032	73.5128	75.2224	76.9320	78.6416	80.3512	82.0608	85.4800	88.8992	92.3184	95.7376	99.1568
403	.0941	.8037	.5133	.2229	.9325	.6422	.3518	.0614	.4806	.8998	.3190	.7383	.1575
406	.0946	.8042	.5138	.2235	.9331	.6427	.3523	.0620	.4812	.9004	.3197	.7389	.1582
409	.0951	.8047	.5143	.2240	.9336	.6433	.3529	.0625	.4818	.9011	.3203	.7396	.1589
412	.0956	.8052	.5149	.2245	.9342	.6438	.3535	.0631	.4824	.9017	.3210	.7403	.1596
427415	70.0961	71.8057	73.5154	75.2250	76.9347	78.6444	80.3540	82.0637	85.4830	88.9023	92.3216	95.7410	99.1603
418	.0966	.8062	.5159	.2256	.9352	.6449	.3546	.0643	.4836	.9029	.3223	.7416	.1610
421	.0970	.8067	.5164	.2261	.9358	.6455	.3551	.0648	.4842	.9036	.3229	.7423	.1617
424	.0975	.8072	.5169	.2266	.9363	.6460	.3557	.0654	.4848	.9042	.3236	.7430	.1624
427	.0980	.8077	.5174	.2272	.9369	.6466	.3563	.0660	.4854	.9048	.3242	.7436	.1631
427430	70.0985	71.8082	73.5180	75.2277	76.9374	78.6471	80.3568	82.0666	85.4860	88.9054	92.3249	95.7443	99.1638
433	.0990	.8087	.5185	.2282	.9379	.6477	.3574	.0671	.4866	.9061	.3255	.7450	.1645
436	.0995	.8092	.5190	.2287	.9385	.6482	.3580	.0677	.4872	.9067	.3262	.7457	.1652
439	.1000	.8098	.5195	.2293	.9390	.6488	.3585	.0683	.4878	.9073	.3268	.7463	.1658
442	.1005	.8103	.5200	.2298	.9396	.6493	.3591	.0689	.4884	.9079	.3275	.7470	.1665
427445	70.1010	71.8108	73.5205	75.2303	76.9401	78.6499	80.3597	82.0694	85.4890	88.9086	92.3281	95.7477	99.1672
448	.1015	.8113	.5211	.2308	.9406	.6504	.3602	.0700	.4896	.9092	.3288	.7484	.1679
451	.1020	.8118	.5216	.2314	.9412	.6510	.3608	.0706	.4902	.9098	.3294	.7490	.1686
454	.1025	.8123	.5221	.2319	.9417	.6515	.3614	.0712	.4908	.9104	.3301	.7497	.1693
457	.1029	.8128	.5226	.2324	.9423	.6521	.3619	.0717	.4914	.9111	.3307	.7504	.1700
427460	70.1034	71.8133	73.5231	75.2330	76.9428	78.6526	80.3625	82.0723	85.4920	88.9117	92.3314	95.7510	99.1707
463	.1039	.8138	.5236	.2335	.9433	.6532	.3630	.0729	.4926	.9123	.3320	.7517	.1714
466	.1044	.8143	.5242	.2340	.9439	.6537	.3636	.0735	.4932	.9129	.3327	.7524	.1721
469	.1049	.8148	.5247	.2345	.9444	.6543	.3642	.0740	.4938	.9136	.3333	.7531	.1728
472	.1054	.8153	.5252	.2351	.9450	.6548	.3647	.0746	.4944	.9142	.3340	.7537	.1735
427475	70.1059	71.8158	73.5257	75.2356	76.9455	78.6554	80.3653	82.0752	85.4950	88.9148	92.3346	95.7544	99.1742
478	.1064	.8163	.5262	.2361	.9460	.6560	.3659	.0758	.4956	.9154	.3352	.7551	.1749
481	.1069	.8168	.5267	.2367	.9466	.6565	.3664	.0764	.4962	.9160	.3359	.7557	.1756
484	.1074	.8173	.5272	.2372	.9471	.6571	.3670	.0769	.4968	.9167	.3365	.7564	.1763
487	.1079	.8178	.5278	.2377	.9477	.6576	.3676	.0775	.4974	.9173	.3372	.7571	.1770
427490	70.1084	71.8183	73.5283	75.2382	76.9482	78.6582	80.3681	82.0781	85.4980	88.9179	92.3378	95.7578	99.1777
493	.1089	.8188	.5288	.2388	.9487	.6587	.3687	.0787	.4986	.9185	.3385	.7584	.1784
496	.1093	.8193	.5293	.2393	.9493	.6593	.3692	.0792	.4992	.9192	.3391	.7591	.1791
499	.1098	.8198	.5298	.2398	.9498	.6598	.3698	.0798	.4998	.9198	.3398	.7598	.1798
502	.1103	.8203	.5303	.2404	.9504	.6604	.3704	.0804	.5004	.9204	.3404	.7604	.1805
427505	70.1108	71.8208	73.5309	75.2409	76.9509	78.6609	80.3709	82.0810	85.5010	88.9210	92.3411	95.7611	99.1812
508	.1113	.8213	.5314	.2414	.9514	.6615	.3715	.0815	.5016	.9217	.3417	.7618	.1819
511	.1118	.8218	.5319	.2419	.9520	.6620	.3721	.0821	.5022	.9223	.3424	.7625	.1826
514	.1123	.8224	.5324	.2425	.9525	.6626	.3726	.0827	.5028	.9229	.3430	.7631	.1832
517	.1128	.8229	.5329	.2430	.9531	.6631	.3732	.0833	.5034	.9235	.3437	.7638	.1839
427520	70.1133	71.8234	73.5334	75.2435	76.9536	78.6637	80.3738	82.0838	85.5040	88.9242	92.3443	95.7645	99.1846
523	.1138	.8239	.5340	.2440	.9541	.6642	.3743	.0844	.5046	.9248	.3450	.7652	.1853
526	.1143	.8244	.5345	.2446	.9547	.6648	.3749	.0850	.5052	.9254	.3456	.7658	.1860
529	.1148	.8249	.5350	.2451	.9552	.6653	.3755	.0856	.5058	.9260	.3463	.7665	.1867
532	.1152	.8254	.5355	.2456	.9558	.6659	.3760	.0861	.5064	.9267	.3469	.7672	.1874
427535	70.1157	71.8259	73.5360	75.2462	76.9563	78.6664	80.3766	82.0867	85.5070	88.9273	92.3476	95.7678	99.1881
538	.1162	.8264	.5365	.2467	.9568	.6670	.3771	.0873	.5076	.9279	.3482	.7685	.1888
541	.1167	.8269	.5371	.2472	.9574	.6675	.3777	.0879	.5082	.9285	.3489	.7692	.1895
544	.1172	.8274	.5376	.2477	.9579	.6681	.3783	.0884	.5088	.9292	.3495	.7699	.1902
547	.1177	.8279	.5381	.2483	.9585	.6686	.3788	.0890	.5094	.9298	.3502	.7705	.1909
427550	70.1182	71.8284	73.5386	75.2488	76.9590	78.6692	80.3794	82.0896	85.5100	88.9304	92.3508	95.7712	99.1916
553	.1187	.8289	.5391	.2493	.9595	.6698	.3800	.0902	.5106	.9310	.3514	.7719	.1923
556	.1192	.8294	.5396	.2499	.9601	.6703	.3805	.0908	.5112	.9316	.3521	.7725	.1930
559	.1197	.8299	.5401	.2504	.9606	.6709	.3811	.0913	.5118	.9323	.3527	.7732	.1937
562	.1202	.8304	.5407	.2509	.9612	.6714	.3817	.0919	.5124	.9329	.3534	.7739	.1944
427565	70.1207	71.8309	73.5412	75.2514	76.9617	78.6720	80.3822	82.0925	85.5130	88.9335	92.3540	95.7746	99.1951
568	.1212	.8314	.5417	.2520	.9622	.6725	.3828	.0931	.5136	.9341	.3547	.7752	.1958
571	.1216	.8319	.5422	.2525	.9628	.6731	.3833	.0936	.5142	.9348	.3553	.7759	.1965
574	.1221	.8324	.5427	.2530	.9633	.6736	.3839	.0942	.5148	.9354	.3560	.7766	.1972
577	.1226	.8329	.5432	.2536	.9639	.6742	.3845	.0948	.5154	.9360	.3566	.7772	.1979
427580	70.1231	71.8334	73.5438	75.2541	76.9644	78.6747	80.3850	82.0954	85.5160	88.9366	92.3573	95.7779	99.1986
583	.1236	.8339	.5443	.2546	.9649	.6753	.3856	.0959	.5166	.9373	.3579	.7786	.1993
586	.1241	.8344	.5448	.2551	.9655	.6758	.3862	.0965	.5172	.9379	.3586	.7793	.2000
589	.1246	.8350	.5453	.2557	.9660	.6764	.3867	.0971	.5178	.9385	.3592	.7799	.2006
592	.1251	.8355	.5458	.2562	.9666	.6769	.3873	.0977	.5184	.9391	.3599	.7806	.2013
427595	70.1256	71.8360	73.5463	75.2567	76.9671	78.6775	80.3879	82.0982	85.5190	88.9398	92.3605	95.7813	99.2020
598	.1261	.8365	.5469	.2572	.9676	.6780	.3884	.0988	.5196	.9404	.3612	.7820	.2027
601	.1266	.8370	.5474	.2578	.9682	.6786	.3890	.0994	.5202	.9410	.3618	.7826	.2034
604	.1271	.8375	.5479	.2583	.9687	.6791	.3896	.1000	.5208	.9416	.3625	.7833	.2041
607	.1275	.8380	.5484	.2588	.9693	.6797	.3901	.1005	.5214	.9423	.3631	.7840	.2048
427610	70.1280	71.8385	73.5489	75.2594	76.9698	78.6802	80.3907	82.1011	85.5220	88.9429	92.3638	95.7846	99.2055
613	.1285	.8390	.5494	.2599	.9603	.6808	.3912	.1017	.5226	.9435	.3644	.7853	.2062
616	.1290	.8395	.5500	.2604	.9709	.6813	.3918	.1023	.5232	.9441	.3651	.7860	.2069
619	.1295	.8400	.5505	.2609	.9714	.6819	.3924	.1028	.5238	.9448	.3657	.7867	.2076
622	.1300	.8405	.5510	.2615	.9720	.6824	.3929	.1034	.5244	.9454	.3664	.7873	.2083
427625	70.1305	71.8410	73.5515	75.2620	76.9725	78.6830	80.3935	82.1040	85.5250	88.9460	92.3670	95.7880	99.2090
628	.1310	.8415	.5520	.2625	.9730	.6836	.3941	.1046	.5256	.9466	.3676	.7887	.2097
631	.1315	.8420	.5525	.2631	.9736	.6841	.3946	.1052	.5262	.9472	.3683	.7893	.2104
634	.1320	.8425	.5530	.2636	.9741	.6847	.3952	.1057	.5268	.9479	.3689	.7900	.2111
637	.1325	.8430	.5536	.2641	.9747	.6852	.3958	.1063	.5274	.9485	.3696	.7907	.2118
427640	70.1330	71.8435	73.5541	75.2646	76.9752	78.6858	80.3963	82.1069	85.5280	88.9491	92.3702	95.7914	99.2125
643	.1335	.8440	.5546	.2652	.9757	.6863	.3969	.1075	.5286	.9497	.3709	.7920	.2132
646	.1339	.8445	.5551	.2657	.9763	.6869	.3974	.1080	.5292	.9504	.3715	.7927	.2139
649	.1344	.8450	.5556	.2662	.9768	.6874	.3980	.1086	.5298	.9510	.3722	.7934	.2146
652	.1349	.8455	.5561	.2668	.9774	.6880	.3986	.1092	.5304	.9516	.3728	.7940	.2153
427655	70.1354	71.8460	73.5567	75.2673	76.9779	78.6885	80.3991	82.1098	85.5310	88.9522	92.3735	95.7947	99.2160
658	.1359	.8465	.5572	.2678	.9784	.6891	.3997	.1103	.5316	.9529	.3741	.7954	.2167
661	.1364	.8470	.5577	.2683	.9790	.6896	.4003	.1109	.5322	.9535	.3748	.7961	.2174
664	.1369	.8476	.5582	.2689	.9795	.6902	.4008	.1115	.5328	.9541	.3754	.7967	.2180
667	.1374	.8481	.5587	.2694	.9801	.6907	.4014	.1121	.5334	.9547	.3761	.7974	.2187
427670	70.1379	71.8486	73.5592	75.2699	76.9806	78.6913	80.4020	82.1126	85.5340	88.9554	92.3767	95.7981	99.2194
673	.1384	.8491	.5598	.2704	.9811	.6918	.4025	.1132	.5346	.9560	.3774	.7988	.2201
676	.1389	.8496	.5603	.2710	.9817	.6924	.4031	.1138	.5352	.9566	.3780	.7994	.2208
679	.1394	.8501	.5608	.2715	.9822	.6929	.4037	.1144	.5358	.9572	.3787	.8001	.2215
682	.1398	.8506	.5613	.2720	.9828	.6935	.4042	.1149	.5364	.9579	.3793	.8008	.2222
427685	70.1403	71.8511	73.5618	75.2726	76.9833	78.6940	80.4048	82.1155	85.5370	88.9585	92.3800	95.8014	99.2229
688	.1408	.8516	.5623	.2731	.9838	.6946	.4053	.1161	.5376	.9591	.3806	.8021	.2236
691	.1413	.8521	.5629	.2736	.9844	.6951	.4059	.1167	.5382	.9597	.3813	.8028	.2243
694	.1418	.8526	.5634	.2741	.9849	.6957	.4065	.1172	.5388	.9604	.3819	.8035	.2250
697	.1423	.8531	.5639	.2747	.9855	.6962	.4070	.1178	.5394	.9610	.3826	.8041	.2257
427700	70.1428	71.8536	73.5644	75.2752	76.9860	78.6968	80.4076	82.1184	85.5400	88.9616	92.3832	95.8048	99.2264

MEGACYCLES PER SECOND

HARMONICS

BASIC FREQ.	112	116	120	124	128	132	136	140	144	148	152	156	160
427700	47.9024	49.6132	51.3240	53.0348	54.7456	56.4564	58.1672	59.8780	61.5888	63.2996	65.0104	66.7212	68.4320
703	.9027	.6135	.3244	.0352	.7460	.4568	.1676	.8784	.5892	.3000	.0109	.7217	.4325
706	.9031	.6139	.3247	.0355	.7464	.4572	.1680	.8788	.5897	.3005	.0113	.7221	.4330
709	.9034	.6142	.3251	.0359	.7468	.4576	.1684	.8793	.5901	.3009	.0118	.7226	.4334
712	.9037	.6146	.3254	.0363	.7471	.4580	.1688	.8797	.5905	.3014	.0122	.7231	.4339
427715	47.9041	49.6149	51.3258	53.0367	54.7475	56.4584	58.1692	59.8801	61.5910	63.3018	65.0127	66.7235	68.4344
718	.9044	.6153	.3262	.0370	.7479	.4588	.1696	.8805	.5914	.3023	.0131	.7240	.4349
721	.9048	.6156	.3265	.0374	.7483	.4592	.1701	.8809	.5918	.3027	.0136	.7245	.4354
724	.9051	.6160	.3269	.0378	.7487	.4596	.1705	.8814	.5923	.3032	.0140	.7249	.4358
727	.9054	.6163	.3272	.0381	.7491	.4600	.1709	.8818	.5927	.3036	.0145	.7254	.4363
427730	47.9058	49.6167	51.3276	53.0385	54.7494	56.4604	58.1713	59.8822	61.5931	63.3040	65.0150	66.7259	68.4368
733	.9061	.6170	.3280	.0389	.7498	.4608	.1717	.8826	.5936	.3045	.0154	.7263	.4373
736	.9064	.6174	.3283	.0393	.7502	.4612	.1721	.8830	.5940	.3049	.0159	.7268	.4378
739	.9068	.6177	.3287	.0396	.7506	.4615	.1725	.8835	.5944	.3054	.0163	.7273	.4382
742	.9071	.6181	.3290	.0400	.7510	.4619	.1729	.8839	.5948	.3058	.0168	.7278	.4387
427745	47.9074	49.6184	51.3294	53.0404	54.7514	56.4623	58.1733	59.8843	61.5953	63.3063	65.0172	68.7282	68.4392
748	.9078	.6188	.3298	.0408	.7517	.4627	.1737	.8847	.5957	.3067	.0177	.7287	.4397
751	.9081	.6191	.3301	.0411	.7521	.4631	.1741	.8851	.5961	.3071	.0182	.7292	.4402
754	.9084	.6195	.3305	.0415	.7525	.4635	.1745	.8856	.5966	.3076	.0186	.7296	.4406
757	.9088	.6198	.3308	.0419	.7529	.4639	.1750	.8860	.5970	.3080	.0191	.7301	.4411
427760	47.9091	49.6202	51.3312	53.0422	54.7533	56.4643	58.1754	59.8864	61.5974	63.3085	65.0195	66.7306	68.4416
763	.9095	.6205	.3316	.0426	.7537	.4647	.1758	.8868	.5979	.3089	.0200	.7310	.4421
766	.9098	.6209	.3319	.0430	.7540	.4651	.1762	.8872	.5983	.3094	.0204	.7315	.4426
769	.9101	.6212	.3323	.0434	.7544	.4655	.1766	.8877	.5987	.3098	.0209	.7320	.4430
772	.9105	.6216	.3326	.0437	.7548	.4659	.1770	.8881	.5992	.3103	.0213	.7324	.4435
427775	47.9108	49.6219	51.3330	53.0441	54.7552	56.4663	58.1774	59.8885	61.5996	63.3107	65.0218	66.7329	68.4440
778	.9111	.6222	.3334	.0445	.7556	.4667	.1778	.8889	.6000	.3111	.0223	.7334	.4445
781	.9115	.6226	.3337	.0448	.7560	.4671	.1782	.8893	.6005	.3116	.0227	.7338	.4450
784	.9118	.6229	.3341	.0452	.7564	.4675	.1786	.8898	.6009	.3120	.0232	.7343	.4454
787	.9121	.6233	.3344	.0456	.7567	.4679	.1790	.8902	.6013	.3125	.0236	.7348	.4459
427790	47.9125	49.6236	51.3348	53.0460	54.7571	56.4683	58.1794	59.8906	61.6018	63.3129	65.0241	66.7352	68.4464
793	.9128	.6240	.3352	.0463	.7575	.4687	.1798	.8910	.6022	.3134	0245	.7357	.4469
796	.9132	.6243	.3355	.0467	.7579	.4691	.1803	.8914	.6026	.3138	.0250	.7362	.4474
799	.9135	.6247	.3359	.0471	.7583	.4695	.1807	.8919	.6031	.3143	.0254	.7366	.4478
802	.9138	.6250	.3362	.0474	.7587	.4699	.1811	.8923	.6035	.3147	.0259	.7371	.4483
427805	47.9142	49.6254	51.3366	53.0478	54.7590	56.4703	58.1815	59.8927	61.6039	63.3151	65.0264	66.7376	68.4488
808	.9145	.6257	.3370	.0482	.7594	.4707	.1819	.8931	.6044	.3156	.0268	.7380	.4493
811	.9148	.6261	.3373	.0486	.7598	.4711	.1823	.8935	.6048	.3160	.0273	.7385	.4498
814	.9152	.6264	.3377	.0489	.7602	.4714	.1827	.8940	.6052	.3165	.0277	.7390	.4502
817	.9155	.6268	.3380	.0493	.7606	.4718	.1831	.8944	.6056	.3169	.0282	.7395	.4507
427820	47.9158	49.6271	51.3384	53.0497	54.7610	56.4722	58.1835	59.8948	61.6061	63.3174	65.0286	66.7399	68.4512
823	.9162	.6275	.3388	.0501	.7613	.4726	.1839	.8952	.6065	.3178	.0291	.7404	.4517
826	.9165	.6278	.3391	.0504	.7617	.4730	.1843	.8956	.6069	.3182	.0296	.7409	.4522
829	.9168	.6282	.3395	.0508	.7621	.4734	.1847	.8961	.6074	.3187	.0300	.7413	.4526
832	.9172	.6285	.3398	.0512	.7625	.4738	.1852	.8965	.6078	.3191	.0305	.7418	.4531
427835	47.9175	49.6289	51.3402	53.0515	54.7629	56.4742	58.1856	59.8969	61.6082	63.3196	65.0309	66.7423	68.4536
838	.9179	.6292	.3406	.0519	.7633	.4746	.1860	.8973	.6087	.3200	.0314	.7427	.4541
841	.9182	.6296	.3409	.0523	.7636	.4750	.1864	.8977	.6091	.3205	.0318	.7432	.4546
844	.9185	.6299	.3413	.0527	.7640	.4754	.1868	.8982	.6095	.3209	.0323	.7437	.4550
847	.9189	.6303	.3416	.0530	.7644	.4758	.1872	.8986	.6100	.3214	.0327	.7441	.4555
427850	47.9192	49.6306	51.3420	53.0534	54.7648	56.4762	58.1876	59.8990	61.6104	63.3218	65.0332	66.7446	68.4560
853	.9195	.6309	.3424	.0538	.7652	.4766	.1880	.8994	.6108	.3222	.0337	.7451	.4565
856	.9199	.6313	.3427	.0541	.7656	.4770	.1884	.8998	.6113	.3227	.0341	.7455	.4570
859	.9202	.6316	.3431	.0545	.7660	.4774	.1888	.9003	.6117	.3231	.0346	.7460	.4574
862	.9205	.6320	.3434	.0549	.7663	.4778	.1892	.9007	.6121	.3236	.0350	.7465	.4579
427865	47.9209	49.6323	51.3438	53.0553	54.7667	56.4782	58.1896	59.9011	61.6126	63.3240	65.0355	66.7469	68.4584
868	.9212	.6327	.3442	.0556	.7671	.4786	.1900	.9015	.6130	.3245	.0359	.7474	.4589
871	.9216	.6330	.3445	.0560	.7675	.4790	.1905	.9019	.6134	.3249	.0364	.7479	.4594
874	.9219	.6334	.3449	.0564	.7679	.4794	.1909	.9024	.6139	.3254	.0368	.7483	.4598
877	.9222	.6337	.3452	.0567	.7683	.4798	.1913	.9028	.6143	.3258	.0373	.7488	.4603
427880	47.9226	49.6341	51.3456	53.0571	54.7686	56.4802	58.1917	59.9032	61.6147	63.3263	65.0378	66.7493	68.4608
883	.9229	.6344	.3460	.0575	.7690	.4806	.1921	.9036	.6152	.3267	.0382	.7497	.4613
886	.9232	.6348	.3463	.0579	.7694	.4810	.1925	.9040	.6156	.3271	.0387	.7502	.4618
889	.9236	.6351	.3467	.0582	.7698	.4813	.1929	.9045	.6160	.3276	.0391	.7507	.4622
892	.9239	.6355	.3470	.0586	.7702	.4817	.1933	.9049	.6164	.3280	.0396	.7512	.4627
427895	47.9242	49.6358	51.3474	53.0590	54.7706	56.4821	58.1937	59.9053	61.6169	63.3285	65.0400	66.7516	68.4632
898	.9246	.6362	.3478	.0594	.7709	.4825	.1941	.9057	.6173	.3289	.0405	.7521	.4637
901	.9249	.6365	.3481	.0597	.7713	.4829	.1945	.9061	.6177	.3293	.0410	.7526	.4642
904	.9252	.6369	.3485	.0601	.7717	.4833	.1949	.9066	.6182	.3298	.0414	.7530	.4646
907	.9256	.6372	.3488	.0605	.7721	.4837	.1954	.9070	.6186	.3302	.0419	.7535	.4651
427910	47.9259	49.6376	51.3492	53.0608	54.7725	56.4841	58.1958	59.9074	61.6190	63.3307	65.0423	66.7540	68.4656
913	.9263	.6379	.3496	.0612	.7729	.4845	.1962	.9078	.6195	.3311	.0428	.7544	.4661
916	.9266	.6383	.3499	.0616	.7732	.4849	.1966	.9082	.6199	.3316	.0432	.7549	.4666
919	.9269	.6386	.3503	.0620	.7736	.4853	.1970	.9087	.6203	.3320	.0437	.7554	.4670
922	.9273	.6390	.3506	.0623	.7740	.4857	.1974	.9091	.6208	.3325	.0441	.7558	.4675
427925	47.9276	49.6393	51.3510	53.0627	54.7744	56.4861	58.1978	59.9095	61.6212	63.3329	65.0446	66.7563	68.4680
928	.9279	.6396	.3514	.0631	.7748	.4865	.1982	.9099	.6216	.3333	.0451	.7568	.4685
931	.9283	.6400	.3517	.0634	.7752	.4869	.1986	.9103	.6221	.3338	.0455	.7572	.4690
934	.9286	.6403	.3521	.0638	.7756	.4873	.1990	.9108	.6225	.3342	.0460	.7577	.4694
937	.9289	.6407	.3524	.0642	.7759	.4877	.1994	.9112	.6229	.3347	.0464	.7582	.4699
427940	47.9293	49.6410	51.3528	53.0646	54.7763	56.4881	58.1998	59.9116	61.6234	63.3351	65.0469	66.7586	68.4704
943	.9296	.6414	.3532	.0649	.7767	.4885	.2002	.9120	.6238	.3356	.0473	.7591	.4709
946	.9300	.6417	.3535	.0653	.7771	.4889	.2007	.9124	.6242	.3360	.0478	.7596	.4714
949	.9303	.6421	.3539	.0657	.7775	.4893	.2011	.9129	.6247	.3365	.0482	.7600	.4718
952	.9306	.6424	.3542	.0660	.7779	.4897	.2015	.9133	.6251	.3369	.0487	.7605	.4723
427955	47.9310	49.6428	51.3546	53.0664	54.7782	56.4901	58.2019	59.9137	61.6255	63.3373	65.0492	66.7610	68.4728
958	.9313	.6431	.3550	.0668	.7786	.4905	.2023	.9141	.6260	.3378	.0496	.7614	.4733
961	.9316	.6435	.3553	.0672	.7790	.4909	.2027	.9145	.6264	.3382	.0501	.7619	.4738
964	.8320	.6438	.3557	.0675	.7794	.4912	.2031	.9150	.6268	.3387	.0505	.7624	.4742
967	.9323	.6442	.3560	.0679	.7798	.4916	.2035	.9154	.6272	.3391	.0510	.7629	.4747
427970	47.9326	49.6445	51.3564	53.0683	54.7802	56.4920	58.2039	59.9158	61.6277	63.3396	65.0514	66.7633	68.4752
973	.9330	.6449	.3568	.0687	.7805	.4924	.2043	.9162	.6281	.3400	.0519	.7638	.4757
976	.9333	.6452	.3571	.0690	.7809	.4928	.2047	.9166	.6285	.3404	.0524	.7643	.4762
979	.9336	.6456	.3575	.0694	.7813	.4932	.2051	.9171	.6290	.3409	.0528	.7647	.4766
982	.9340	.6459	.3578	.0698	.7817	.4936	.2056	.9175	.6294	.3413	.0533	.7652	.4771
427985	47.9343	49.6463	51.3582	53.0701	54.7821	56.4940	58.2060	59.9179	61.6298	63.3418	65.0537	66.7657	68.4776
988	.9347	.6466	.3586	.0705	.7825	.4944	.2064	.9183	.6303	.3422	.0542	.7661	.4781
991	.9350	.6470	.3589	.0709	.7828	.4948	.2068	.9187	.6307	.3427	.0546	.7666	.4786
994	.9353	.6473	.3593	.0713	.7832	.4952	.2072	.9192	.6311	.3431	.0551	.7671	.4790
997	.9357	.6477	.3596	.0716	.7836	.4956	.2076	.9196	.6316	.3436	.0555	.7675	.4795
428000	47.9360	49.6480	51.3600	53.0720	54.7840	56.4960	58.2080	59.9200	61.6320	63.3440	65.0560	66.7680	68.4800

MEGACYCLES PER SECOND

H A R M O N I C S

BASIC FREQ.	164	168	172	176	180	184	188	192	200	208	216	224	232
427700	70.1428	71.8536	73.5644	75.2752	76.9860	78.6968	80.4076	82.1184	85.5400	88.9616	92.3832	95.8048	99.2264
703	.1433	.8541	.5649	.2757	.9865	.6974	.4082	.1190	.5406	.9622	.3838	.8055	.2271
706	.1438	.8546	.5654	.2763	.9871	.6979	.4087	.1196	.5412	.9628	.3845	.8061	.2278
709	.1443	.8551	.5659	.2768	.9876	.6985	.4093	.1201	.5418	.9635	.3851	.8068	.2285
712	.1448	.8556	.5665	.2773	.9882	.6990	.4099	.1207	.5424	.9641	.3858	.8075	.2292
427715	70.1453	71.8561	73.5670	75.2778	76.9887	78.6996	80.4104	82.1213	85.5430	88.9647	92.3864	95.8082	99.2299
718	.1458	.8566	.5675	.2784	.9892	.7001	.4110	.1219	.5436	.9653	.3871	.8088	.2306
721	.1462	.8571	.5680	.2789	.9898	.7007	.4115	.1224	.5442	.9660	.3877	.8095	.2313
724	.1467	.8576	.5685	.2794	.9903	.7012	.4121	.1230	.5448	.9666	.3884	.8102	.2320
727	.1472	.8581	.5690	.2800	.9909	.7018	.4127	.1236	.5454	.9672	.3890	.8108	.2327
427730	70.1477	71.8586	73.5696	75.2805	76.9914	78.7023	80.4132	82.1242	85.5460	88.9678	92.3897	95.8115	99.2334
733	.1482	.8591	.5701	.2810	.9919	.7029	.4138	.1247	.5466	.9685	.3903	.8122	.2341
736	.1487	.8596	.5706	.2815	.9925	.7034	.4144	.1253	.5472	.9691	.3910	.8129	.2348
739	.1492	.8602	.5711	.2821	.9930	.7040	.4149	.1259	.5478	.9697	.3916	.8135	.2354
742	.1497	.8607	.5716	.2826	.9936	.7045	.4155	.1265	.5484	.9703	.3923	.8142	.2361
427745	70.1502	71.8612	73.5721	75.2831	76.9941	78.7051	80.4161	82.1270	85.5490	88.9710	92.3929	95.8149	99.2368
748	.1507	.8617	.5727	.2836	.9946	.7056	.4166	.1276	.5496	.9716	.3936	.8156	.2375
751	.1512	.8622	.5732	.2842	.9952	.7062	.4172	.1282	.5502	.9722	.3942	.8162	.2382
754	.1517	.8627	.5737	.2847	.9957	.7067	.4178	.1288	.5508	.9728	.3949	.8169	.2389
757	.1521	.8632	.5742	.2852	.9963	.7073	.4183	.1293	.5514	.9735	.3955	.8176	.2396
427760	70.1526	71.8637	73.5747	75.2858	76.9968	78.7078	80.4189	82.1299	85.5520	88.9741	92.3962	95.8182	99.2403
763	.1531	.8642	.5752	.2863	.9973	.7084	.4194	.1305	.5526	.9747	.3968	.8189	.2410
766	.1536	.8647	.5758	.2868	.9979	.7089	.4200	.1311	.5532	.9753	.3975	.8196	.2417
769	.1541	.8652	.5763	.2873	.9984	.7095	.4206	.1316	.5538	.9760	.3981	.8203	.2424
772	.1546	.8657	.5768	.2879	.9990	.7100	.4211	.1322	.5544	.9766	.3988	.8209	.2431
427775	70.1551	71.8662	73.5773	75.2884	76.9995	78.7106	80.4217	82.1328	85.5550	88.9772	92.3994	95.8216	99.2438
778	.1556	.8667	.5778	.2889	77.0000	.7112	.4223	.1334	.5556	.9778	.4000	.8223	.2445
781	.1561	.8672	.5783	.2895	.0006	.7117	.4228	.1340	.5562	.9784	.4007	.8229	.2452
784	.1566	.8677	.5788	.2900	.0011	.7123	.4234	.1345	.5568	.9791	.4013	.8236	.2459
787	.1571	.8682	.5794	.2905	.0017	.7128	.4240	.1351	.5574	.9797	.4020	.8243	.2466
427790	70.1576	71.8687	73.5799	75.2910	77.0022	78.7134	80.4245	82.1357	85.5580	88.9803	92.4026	95.8250	99.2473
793	.1581	.8692	.5804	.2916	.0027	.7139	.4251	.1363	.5586	.9809	.4033	.8256	.2480
796	.1585	.8697	.5809	.2921	.0033	.7145	.4256	.1368	.5592	.9816	.4039	.8263	.2487
799	.1590	.8702	.5814	.2926	.0038	.7150	.4262	.1374	.5598	.9822	.4046	.8270	.2494
802	.1595	.8707	.5819	.2932	.0044	.7156	.4268	.1380	.5604	.9828	.4052	.8276	.2501
427805	70.1600	71.8712	73.5825	75.2937	77.0049	78.7161	80.4273	82.1386	85.5610	88.9834	92.4059	95.8283	99.2508
808	.1605	.8717	.5830	.2942	.0054	.7167	.4279	.1391	.5616	.9841	.4065	.8290	.2515
811	.1610	.8722	.5835	.2947	.0060	.7172	.4285	.1397	.5622	.9847	.4072	.8297	.2522
814	.1615	.8728	.5840	.2953	.0065	.7178	.4290	.1403	.5628	.9853	.4078	.8303	.2528
817	.1620	.8733	.5845	.2958	.0071	.7183	.4296	.1409	.5634	.9859	.4085	.8310	.3535
427820	70.1625	71.8738	73.5850	75.2963	77.0076	78.7189	80.4302	82.1414	85.5640	88.9866	92.4091	95.8317	99.2542
823	.1630	.8743	.5856	.2968	.0081	.7194	.4307	.1420	.5646	.9872	.4098	.8324	.2549
826	.1635	.8748	.5861	.2974	.0087	.7200	.4313	.1426	.5652	.9878	.4104	.8330	.2556
829	.1640	.8753	.5866	.2979	.0092	.7205	.4319	.1432	.5658	.9884	.4111	.8337	.2563
832	.1644	.8758	.5871	.2984	.0098	.7211	.4324	.1437	.5664	.9891	.4117	.8344	.2570
427835	70.1649	71.8763	73.5876	75.2990	77.0103	78.7216	80.4330	82.1443	85.5670	88.9897	92.4124	95.8350	99.2577
838	.1654	.8768	.5881	.2995	.0108	.7222	.4335	.1449	.5676	.9903	.4130	.8357	.2584
841	.1659	.8773	.5887	.3000	.0114	.7227	.4341	.1455	.5682	.9909	.4137	.8364	.2591
844	.1664	.8778	.5892	.3005	.0119	.7233	.4347	.1460	.5688	.9916	.4143	.8371	.2598
847	.1669	.8783	.5897	.3011	.0125	.7238	.4352	.1466	.5694	.9922	.4150	.8377	.2605
427850	70.1674	71.8788	73.5902	75.3016	77.0130	78.7244	80.4358	82.1472	85.5700	88.9928	92.4156	95.8384	99.2612
853	.1679	.8793	.5907	.3021	.0135	.7250	.4364	.1478	.5706	.9934	.4162	.8391	.2619
856	.1684	.8798	.5912	.3027	.0141	.7255	.4369	.1484	.5712	.9940	.4169	.8397	.2626
859	.1689	.8803	.5917	.3032	.0146	.7261	.4375	.1489	.5718	.9947	.4175	.8404	.2633
862	.1694	.8808	.5923	.3037	.0152	.7266	.4381	.1495	.5724	.9953	.4182	.8411	.2640
427865	70.1699	71.8813	73.5928	75.3042	77.0157	78.7272	80.4386	82.1501	85.5730	88.9959	92.4188	95.8418	99.2647
868	.1704	.8818	.5933	.3048	.0162	.7277	.4392	.1507	.5736	.9965	.4195	.8424	.2654
871	.1708	.8823	.5938	.3053	.0168	.7283	.4397	.1512	.5742	.9972	.4201	.8431	.2661
874	.1713	.8828	.5943	.3058	.0173	.7288	.4403	.1518	.5748	.9978	.4208	.8438	.2668
877	.1718	.8833	.5948	.3064	.0179	.7294	.4409	.1524	.5754	.9984	.4214	.8444	.2675
427880	70.1723	71.8838	73.5954	75.3069	77.0184	78.7299	80.4414	82.1530	85.5760	88.9990	92.4221	95.8451	99.2682
883	.1728	.8843	.5959	.3074	.0189	.7305	.4420	.1535	.5766	.9997	.4227	.8458	.2689
886	.1733	.8848	.5964	.3079	.0195	.7310	.4426	.1541	.5772	89.0003	.4234	.8465	.2696
889	.1738	.8854	.5969	.3085	.0200	.7316	.4431	.1547	.5778	.0009	.4240	.8471	.2702
892	.1743	.8859	.5974	.3090	.0206	.7321	.4437	.1553	.5784	.0015	.4247	.8478	.2709
427895	70.1748	71.8864	73.5979	75.3095	77.0211	78.7327	80.4443	82.1558	85.5790	89.0022	92.4253	95.8485	99.2716
898	.1753	.8869	.5985	.3100	.0216	.7332	.4448	.1564	.5796	.0028	.4260	.8492	.2723
901	.1758	.8874	.5990	.3106	.0222	.7338	.4454	.1570	.5802	.0034	.4266	.8498	.2730
904	.1763	.8879	.5995	.3111	.0227	.7343	.4460	.1576	.5808	.0040	.4273	.8505	.2737
907	.1767	.8884	.6000	.3116	.0233	.7349	.4465	.1581	.5814	.0047	.4279	.8512	.2744
427910	70.1772	71.8889	73.6005	75.3122	77.0238	78.7354	80.4471	82.1587	85.5820	89.0053	92.4286	95.8518	99.2751
913	.1777	.8894	.6010	.3127	.0243	.7360	.4476	.1593	.5826	.0059	.4292	.8525	.2758
916	.1782	.8899	.6016	.3132	.0249	.7365	.4482	.1599	.5832	.0065	.4299	.8532	.2765
919	.1787	.8904	.6021	.3137	.0254	.7371	.4488	.1604	.5838	.0072	.4305	.8539	.2772
922	.1792	.8909	.6026	.3143	.0260	.7376	.4493	.1610	.5844	.0078	.4312	.8545	.2779
427925	70.1797	71.8914	73.6031	75.3148	77.0265	78.7382	80.4499	82.1616	85.5850	89.0084	92.4318	95.8552	99.2786
928	.1802	.8919	.6036	.3153	.0270	.7388	.4505	.1622	.5856	.0090	.4324	.8559	.2793
931	.1807	.8924	.6041	.3159	.0276	.7393	.4510	.1628	.5862	.0096	.4331	.8565	.2800
934	.1812	.8929	.6046	.3164	.0281	.7399	.4516	.1633	.5868	.0103	.4337	.8572	.2807
937	.1817	.8934	.6052	.3169	.0287	.7404	.4522	.1639	.5874	.0109	.4344	.8579	.2814
427940	70.1822	71.8939	73.6057	75.3174	77.0292	78.7410	80.4527	82.1645	85.5880	89.0115	92.4350	95.8586	99.2821
943	.1827	.8944	.6062	.3180	.0297	.7415	.4533	.1651	.5886	.0121	.4357	.8592	.2828
946	.1831	.8949	.6067	.3185	.0303	.7421	.4538	.1656	.5892	.0128	.4363	.8599	.2835
949	.1836	.8954	.6072	.3190	.0308	.7426	.4544	.1662	.5898	.0134	.4370	.8606	.2842
952	.1841	.8959	.6077	.3196	.0314	.7432	.4550	.1668	.5904	.0140	.4376	.8612	.2849
427955	70.1846	71.8964	73.6083	75.3201	77.0319	78.7437	80.4555	82.1674	85.5910	89.0146	92.4383	95.8619	99.2856
958	.1851	.8969	.6088	.3206	.0324	.7443	.4561	.1679	.5916	.0153	.4389	.8626	.2863
961	.1856	.8974	.6093	.3211	.0330	.7448	.4567	.1685	.5922	.0159	.4396	.8633	.2870
964	.1861	.8980	.6098	.3217	.0335	.7454	.4572	.1691	.5928	.0165	.4402	.8639	.2876
967	.1866	.8985	.6103	.3222	.0341	.7459	.4578	.1697	.5934	.0171	.4409	.8646	.2883
427970	70.1871	71.8990	73.6108	75.3227	77.0346	78.7465	80.4584	82.1702	85.5940	89.0178	92.4415	95.8653	99.2890
973	.1876	.8995	.6114	.3232	.0351	.7470	.4589	.1708	.5946	.0184	.4422	.8660	.2897
976	.1881	.9000	.6119	.3238	.0357	.7476	.4595	.1714	.5952	.0190	.4428	.8666	.2904
979	.1886	.9005	.6124	.3243	.0362	.7481	.4601	.1720	.5958	.0196	.4435	.8673	.2911
982	.1890	.9010	.6129	.3248	.0368	.7487	.4606	.1725	.5964	.0203	.4441	.8680	.2918
427985	70.1895	71.9015	73.6134	75.3254	77.0373	78.7492	80.4612	82.1731	85.5970	89.0209	92.4448	95.8686	99.2925
988	.1900	.9020	.6139	.3259	.0378	.7498	.4617	.1737	.5976	.0215	.4454	.8693	.2932
991	.1905	.9025	.6145	.3264	.0384	.7503	.4623	.1743	.5982	.0221	.4461	.8700	.2939
994	.1910	.9030	.6150	.3269	.0389	.7509	.4629	.1748	.5988	.0228	.4467	.8707	.2946
997	.1915	.9035	.6155	.3275	.0395	.7514	.4634	.1754	.5994	.0234	.4474	.8713	.2953
428000	70.1920	71.9040	73.6160	75.3280	77.0400	78.7520	80.4640	82.1760	85.6000	89.0240	92.4480	95.8720	99.2960

MEGACYCLES PER SECOND

R

H A R M O N I C S

BASIC FREQ.	112	116	120	124	128	132	136	140	144	148	152	156	160
428000	47.9360	49.6480	51.3600	53.0720	54.7840	56.4960	58.2080	59.9200	61.6320	63.3440	65.0560	66.7680	68.4800
003	.9363	.6483	.3604	.0724	.7844	.4964	.2084	.9204	.6324	.3444	.0565	.7685	.4805
006	.9367	.6487	.3607	.0727	.7848	.4968	.2088	.9208	.6329	.3449	.0569	.7689	.4810
009	.9370	.6490	.3611	.0731	.7852	.4972	.2092	.9213	.6333	.3453	.0574	.7694	.4814
012	.9373	.6494	.3614	.0735	.7855	.4976	.2096	.9217	.6337	.3458	.0578	.7699	.4819
428015	47.9377	49.6497	51.3618	53.0739	54.7859	56.4980	58.2100	59.9221	61.6342	63.3462	65.0583	66.7703	68.4824
018	.9380	.6501	.3622	.0742	.7863	.4984	.2104	.9225	.6346	.3467	.0587	.7708	.4829
021	.9384	.6504	.3625	.0746	.7867	.4988	.2109	.9229	.6350	.3471	.0592	.7713	.4834
024	.9387	.6508	.3629	.0750	.7871	.4992	.2113	.9234	.6355	.3476	.0596	.7717	.4838
027	.9390	.6511	.3632	.0753	.7875	.4996	.2117	.9238	.6359	.3480	.0601	.7722	.4843
428030	47.9394	49.6515	51.3636	53.0757	54.7878	56.5000	58.2121	59.9242	61.6363	63.3484	65.0606	66.7727	68.4848
033	.9397	.6518	.3640	.0761	.7882	.5004	.2125	.9246	.6368	.3489	.0610	.7731	.4853
036	.9400	.6522	.3643	.0765	.7886	.5008	.2129	.9250	.6372	.3493	.0615	.7736	.4858
039	.9404	.6525	.3647	.0768	.7890	.5011	.2133	.9255	.6376	.3498	.0619	.7741	.4862
042	.9407	.6529	.3650	.0772	.7894	.5015	.2137	.9259	.6380	.3502	.0624	.7746	.4867
428045	47.9410	49.6532	51.3654	53.0776	54.7898	56.5019	58.2141	59.9263	61.6385	63.3507	65.0628	66.7750	68.4872
048	.9414	.6536	.3658	.0780	.7901	.5023	.2145	.9267	.6389	.3511	.0633	.7755	.4877
051	.9417	.6539	.3661	.0783	.7905	.5027	.2149	.9271	.6393	.3515	.0638	.7760	.4882
054	.9420	.6543	.3665	.0787	.7909	.5031	.2153	.9276	.6398	.3520	.0642	.7764	.4886
057	.9424	.6546	.3668	.0791	.7913	.5035	.2158	.9280	.6402	.3524	.0647	.7769	.4891
428060	47.9427	49.6550	51.3672	53.0794	54.7917	56.5039	58.2162	59.9284	61.6406	63.3529	65.0651	66.7774	68.4896
063	.9431	.6553	.3676	.0798	.7921	.5043	.2166	.9288	.6411	.3533	.0656	.7778	.4901
066	.9434	.6557	.3679	.0802	.7924	.5047	.2170	.9292	.6415	.3538	.0660	.7783	.4906
069	.9437	.6560	.3683	.0806	.7928	.5051	.2174	.9297	.6419	.3542	.0665	.7788	.4910
072	.9441	.6564	.3686	.0809	.7932	.5055	.2178	.9301	.6424	.3547	.0669	.7792	.4915
428075	47.9444	49.6567	51.3690	53.0813	54.7936	56.5059	58.2182	59.9305	61.6428	63.3551	65.0674	66.7797	68.4920
078	.9447	.6570	.3694	.0817	.7940	.5063	.2186	.9309	.6432	.3555	.0679	.7802	.4925
081	.9451	.6574	.3697	.0820	.7944	.5067	.2190	.9313	.6437	.3560	.0683	.7806	.4930
084	.9454	.6577	.3701	.0824	.7948	.5071	.2194	.9318	.6441	.3564	.0688	.7811	.4934
087	.9457	.6581	.3704	.0828	.7951	.5075	.2198	.9322	.6445	.3569	.0692	.7816	.4939
428090	47.9461	49.6584	51.3708	53.0832	54.7955	56.5079	58.2202	59.9326	61.6450	63.3573	65.0697	66.7820	68.4944
093	.9464	.6588	.3712	.0835	.7959	.5083	.2206	.9330	.6454	.3578	.0701	.7825	.4949
096	.9468	.6591	.3715	.0839	.7963	.5087	.2211	.9334	.6458	.3582	.0706	.7830	.4954
099	.9471	.6595	.3719	.0843	.7967	.5091	.2215	.9339	.6463	.3587	.0710	.7834	.4958
102	.9474	.6598	.3722	.0846	.7971	.5095	.2219	.9343	.6467	.3591	.0715	.7839	.4963
428105	47.9478	49.6602	51.3726	53.0850	54.7974	56.5099	58.2223	59.9347	61.6471	63.3595	65.0720	66.7844	68.4968
108	.9481	.6605	.3730	.0854	.7978	.5103	.2227	.9351	.6476	.3600	.0724	.7848	.4973
111	.9484	.6609	.3733	.0858	.7982	.5107	.2231	.9355	.6480	.3604	.0729	.7853	.4978
114	.9488	.6612	.3737	.0861	.7986	.5110	.2235	.9360	.6484	.3609	.0733	.7858	.4982
117	.9491	.6616	.3740	.0865	.7990	.5114	.2239	.9364	.6488	.3613	.0738	.7863	.4987
428120	47.9494	49.6619	31.3744	53.0869	54.7994	56.5118	59.2243	59.9368	61.6493	63.3618	65.0742	66.7867	68.4992
123	.9498	.6623	.3748	.0873	.7997	.5122	.2247	.9372	.6497	.3622	.0747	.7872	.4997
126	.9501	.6626	.3751	.0876	.8001	.5126	.2251	.9376	.6501	.3626	.0752	.7877	.5002
129	.9504	.6630	.3755	.0880	.8005	.5130	.2255	.9381	.6506	.3631	.0756	.7881	.5006
132	.9508	.6633	.3758	.0884	.8009	.5134	.2260	.9385	.6510	.3635	.0761	.7886	.5011
428135	47.9511	49.6637	51.3762	53.0887	54.8013	56.5138	58.2264	59.9389	61.6514	63.3640	65.0765	66.7891	68.5016
138	.9515	.6640	.3766	.0891	.8017	.5142	.2268	.9393	.6519	.3644	.0770	.7895	.5021
141	.9518	.6644	.3769	.0895	.8020	.5146	.2272	.9397	.6523	.3649	.0774	.7900	.5026
144	.9521	.6647	.3773	.0899	.8024	.5150	.2276	.9402	.6527	.3653	.0779	.7905	.5030
147	.9525	.6651	.3776	.0902	.8028	.5154	.2280	.9406	.6532	.3658	.0783	.7909	.5035
428150	47.9528	49.6654	51.3780	53.0906	54.8032	56.5158	58.2284	59.9410	61.6536	63.3662	65.0788	66.7914	68.5040
153	.9531	.6657	.3784	.0910	.8036	.5162	.2288	.9414	.6540	.3666	.0793	.7919	.5045
156	.9535	.6661	.3787	.0913	.8040	.5166	.2292	.9418	.6545	.3671	.0797	.7923	.5050
159	.9538	.6664	.3791	.0917	.8044	.5170	.2296	.9423	.6549	.3675	.0802	.7928	.5054
162	.9541	.6668	.3794	.0921	.8047	.5174	.2300	.9427	.6553	.3680	.0806	.7933	.5059
428165	47.9545	49.6671	51.3798	53.0925	54.8051	56.5178	58.2304	59.9431	61.6558	63.3684	65.0811	66.7937	68.5064
168	.9548	.6675	.3802	.0928	.8055	.5182	.2308	.9435	.6562	.3689	.0815	.7942	.5069
171	.9552	.6678	.3805	.0932	.8059	.5186	.2313	.9439	.6566	.3693	.0820	.7947	.5074
174	.9555	.6682	.3809	.0936	.8063	.5190	.2317	.8444	.6571	.3698	.0824	.7951	.5078
177	.9558	.6685	.3812	.0939	.8067	.5194	.2321	.9448	.6575	.3702	.0829	.7956	.5083
428180	47.9562	49.6689	51.3816	53.0943	54.8070	56.5198	58.2325	59.9452	61.6579	63.3706	65.0834	66.7961	68.5088
183	.9565	.6692	.3820	.0947	.8074	.5202	.2329	.9456	.6584	.3711	.0838	.7965	.5093
186	.9568	.6696	.3823	.0951	.8078	.5206	.2333	.9460	.6588	.3715	.0843	.7970	.5098
189	.9572	.6699	.3827	.0954	.8082	.5209	.2337	.9465	.6592	.3720	.0847	.7975	.5102
192	.9575	.6703	.3830	.0958	.8086	.5213	.2341	.9469	.6596	.3724	.0852	.7980	.5107
428195	47.9578	49.6706	51.3834	53.0962	54.8090	56.5217	58.2345	59.9473	61.6601	63.3729	65.0856	66.7984	68.5112
198	.9582	.6710	.3838	.0966	.8093	.5221	.2349	.9477	.6605	.3733	.0861	.7989	.5117
201	.9585	.6713	.3841	.0969	.8097	.5225	.2353	.9481	.6609	.3737	.0866	.7994	.5122
204	.9588	.6717	.3845	.0973	.8101	.5229	.2357	.9486	.6614	.3742	.0870	.7998	.5126
207	.9592	.6720	.3848	.0977	.8105	.5233	.2362	.9490	.6618	.3746	.0875	.8003	.5131
428210	47.9595	49.6724	51.3852	53.0980	54.8109	56.5237	58.2366	59.9494	61.6622	63.3751	65.0879	66.8008	68.5136
213	.9599	.6727	.3856	.0984	.8113	.5241	.2370	.9498	.6627	.3755	.0884	.8012	.5141
216	.9602	.6731	.3859	.0988	.8116	.5245	.2374	.9502	.6631	.3760	.0888	.8017	.5146
219	.9605	.6734	.3863	.0992	.8120	.5249	.2378	.9507	.6635	.3764	.0893	.8022	.5150
222	.9609	.6738	.3866	.0995	.8124	.5253	.2382	.9511	.6640	.3769	.0897	.8026	.5155
428225	47.9612	49.6741	51.3870	53.0999	54.8128	56.5257	58.2386	59.9515	61.6644	63.3773	65.0902	66.8031	68.5160
228	.9615	.6744	.3874	.1003	.8132	.5261	.2390	.9519	.6648	.3777	.0907	.8036	.5165
231	.9619	.6748	.3877	.1006	.8136	.5265	.2394	.9523	.6653	.3782	.0911	.8040	.5170
234	.9622	.6751	.3881	.1010	.8140	.5269	.2398	.9528	.6657	.3786	.0916	.8045	.5174
237	.9625	.6755	.3884	.1014	.8143	.5273	.2402	.9532	.6661	.3791	.0920	.8050	.5179
428240	47.9629	49.6758	51.3888	53.1018	54.8147	56.5277	58.2406	59.9536	61.6666	63.3795	65.0925	66.8054	68.5184
243	.9632	.6762	.3892	.1021	.8151	.5281	.2410	.9540	.6670	.3800	.0929	.8059	.5189
246	.9636	.6765	.3895	.1025	.8155	.5285	.2415	.9544	.6674	.3804	.0934	.8064	.5194
249	.9639	.6769	.3899	.1029	.8159	.5289	.2419	.9549	.6679	.3809	.0938	.8068	.5198
252	.9642	.6772	.3902	.1032	.8163	.5293	.2423	.9553	.6683	.3813	.0943	.8073	.5203
428255	47.9646	49.6776	51.3906	53.1036	54.8166	56.5297	58.2427	59.9557	61.6687	63.3817	65.0948	66.8078	68.5208
258	.9649	.6779	.3910	.1040	.8170	.5301	.2431	.9561	.6692	.3822	.0952	.8082	.5213
261	.9652	.6783	.3913	.1044	.8174	.5305	.2435	.9565	.6696	.3826	.0957	.8087	.5218
264	.9656	.6786	.3917	.1047	.8178	.5308	.2439	.9570	.6700	.3831	.0961	.8092	.5222
267	.9659	.6790	.3920	.1051	.8182	.5312	.2443	.9574	.6704	.3835	.0966	.8097	.5227
428270	47.9662	49.6793	51.3924	53.1055	54.8186	56.5316	58.2447	59.9578	61.6709	63.3840	65.0970	66.8101	68.5232
273	.9666	.6797	.3928	.1059	.8189	.5320	.2451	.9582	.6713	.3844	.0975	.8106	.5237
276	.9669	.6800	.3931	.1062	.8193	.5324	.2455	.9586	.6717	.3848	.0980	.8111	.5242
279	.9672	.6804	.3935	.1066	.8197	.5328	.2459	.9591	.6722	.3853	.0984	.8115	.5246
282	.9676	.6807	.3938	.1070	.8201	.5332	.2464	.9595	.6726	.3857	.0989	.8120	.5251
428285	47.9679	49.6811	51.3942	53.1073	54.8205	56.5336	58.2468	59.9599	61.6730	63.3862	65.0993	66.8125	68.5256
288	.9683	.6814	.3946	.1077	.8209	.5340	.2472	.9603	.6735	.3866	.0998	.8129	.5261
291	.9686	.6818	.3949	.1081	.8212	.5344	.2476	.9607	.6739	.3871	.1002	.8134	.5266
294	.9689	.6821	.3953	.1085	.8216	.5348	.2480	.9612	.6743	.3875	.1007	.8139	.5270
297	.9693	.6825	.3956	.1088	.8220	.5352	.2484	.9616	.6748	.3880	.1011	.8143	.5275
428300	47.9696	49.6828	51.3960	53.1092	54.8224	56.5356	58.2488	59.9620	61.6752	63.3884	65.1016	66.8148	68.5280

MEGACYCLES PER SECOND

H A R M O N I C S

BASIC FREQ.	164	168	172	176	180	184	188	192	200	208	216	224	232
428000	70.1920	71.9040	73.6160	75.3280	77.0400	78.7520	80.4640	82.1760	85.6000	89.0240	92.4480	95.8720	99.2960
003	.1925	.9045	.6165	.3285	.0405	.7526	.4646	.1766	.6006	.0246	.4486	.8727	.2967
006	.1930	.9050	.6170	.3291	.0411	.7531	.4651	.1772	.6012	.0252	.4493	.8733	.2974
099	.1935	.9055	.6175	.3296	.0416	.7537	.4657	.1777	.6018	.0259	.4499	.8740	.2981
012	.1940	.9060	.6181	.3301	.0422	.7542	.4663	.1783	.6024	.0265	.4506	.8747	.2988
428015	70.1945	71.9065	73.6186	75.3306	77.0427	78.7548	80.4668	82.1789	85.6030	89.0271	92.4512	95.8754	99.2995
018	.1950	.9070	.6191	.3312	.0432	.7553	.4674	.1795	.6036	.0277	.4519	.8760	.3002
021	.1954	.9075	.6196	.3317	.0438	.7559	.4679	.1800	.6042	.0284	.4525	.8767	.3009
024	.1959	.9080	.6201	.3322	.0443	.7564	.4685	.1806	.6048	.0290	.4532	.8774	.3016
027	.1964	.9085	.6206	.3328	.0449	.7570	.4691	.1812	.6054	.0296	.4538	.8780	.3023
428030	70.1969	71.9090	73.6212	75.3333	77.0454	78.7575	80.4696	82.1818	85.6060	89.0302	92.4545	95.8787	99.3030
033	.1974	.9095	.6217	.3338	.0459	.7581	.4702	.1823	.6066	.0309	.4551	.8794	.3037
036	.1979	.9100	.6222	.3343	.0465	.7586	.4708	.1829	.6072	.0315	.4558	.8801	.3044
039	.1984	.9106	.6227	.3349	.0470	.7592	.4713	.1835	.6078	.0321	.4564	.8807	.3050
042	.1989	.9111	.6232	.3354	.0476	.7597	.4719	.1841	.6084	.0327	.4571	.8814	.3057
428045	70.1994	71.9116	73.6237	75.3359	77.0481	78.7603	80.4725	82.1846	85.6090	89.0334	92.4577	95.8821	99.3064
048	.1999	.9121	.6243	.3364	.0486	.7608	.4730	.1852	.6096	.0340	.4584	.8828	.3071
051	.2004	.9126	.6248	.3370	.0492	.7614	.4736	.1858	.6102	.0346	.4590	.8834	.3078
054	.2009	.9131	.6253	.3375	.0497	.7619	.4742	.1864	.6108	.0352	.4597	.8841	.3085
057	.2013	.9136	.6258	.3380	.0503	.7625	.4747	.1869	.6114	.0359	.4603	.8848	.3092
428060	70.2018	71.9141	73.6263	75.3386	77.0508	78.7630	80.4753	82.1875	85.6120	89.0365	92.4610	95.8854	99.3099
063	.2023	.9146	.6268	.3391	.0513	.7636	.4758	.1881	.6126	.0371	.4616	.8861	.3106
066	.2028	.9151	.6274	.3396	.0519	.7641	.4764	.1887	.6132	.0377	.4623	.8868	.3113
069	.2033	.9156	.6279	.3401	.0524	.7647	.4770	.1892	.6138	.0384	.4629	.8875	.3120
072	.2038	.9161	.6284	.3407	.0530	.7652	.4775	.1898	.6144	.0390	.4636	.8881	.3127
428075	70.2043	71.9166	73.6289	75.3412	77.0535	78.7658	80.4781	82.1904	85.6150	89.0396	92.4642	95.8888	99.3134
078	.2048	.9171	.6294	.3417	.0540	.7664	.4787	.1910	.6156	.0402	.4648	.8895	.3141
081	.2053	.9176	.6299	.3423	.0546	.7669	.4792	.1916	.6162	.0408	.4655	.8901	.3148
084	.2058	.9181	.6304	.3428	.0551	.7675	.4798	.1921	.6168	.0415	.4661	.8908	.3155
087	.2063	.9186	.6310	.3433	.0557	.7680	.4804	.1927	.6174	.0421	.4668	.8915	.3162
428090	70.2068	71.9191	73.6315	75.3438	77.0562	78.7686	80.4809	82.1933	85.6180	89.0427	92.4674	95.8922	99.3169
093	.2073	.9196	.6320	.3444	.0567	.7691	.4815	.1939	.6186	.0433	.4681	.8928	.3176
096	.2077	.9201	.6325	.3449	.0573	.7697	.4820	.1944	.6192	.0440	.4687	.8935	.3183
099	.2082	.9206	.6330	.3454	.0578	.7702	.4826	.1950	.6198	.0446	.4694	.8942	.3190
102	.2087	.9211	.6335	.3460	.0584	.7708	.4832	.1956	.6204	.0452	.4700	.8948	.3197
428105	70.2092	71.9216	73.6341	75.3465	77.0589	78.7713	80.4837	82.1962	85.6210	89.0458	92.4707	95.8955	99.3204
108	.2097	.9221	.6346	.3470	.0594	.7719	.4843	.1967	.6216	.0465	.4713	.8962	.3211
111	.2102	.9226	.6351	.3475	.0600	.7724	.4849	.1973	.6222	.0471	.4720	.8969	.3218
114	.2107	.9232	.6356	.3481	.0605	.7730	.4854	.1979	.6228	.0477	.4726	.8975	.3224
117	.2112	.9237	.6361	.3486	.0611	.7735	.4860	.1985	.6234	.0483	.4733	.8982	.3231
428120	70.2117	71.9242	73.6366	75.3491	77.0616	78.7741	80.4866	82.1990	85.6240	89.0490	92.4739	95.8989	99.3238
123	.2122	.9247	.6372	.3496	.0621	.7746	.4871	.1996	.6246	.0496	.4746	.8996	.3245
126	.2127	.9252	.6377	.3502	.0627	.7752	.4877	.2002	.6252	.0502	.4752	.9002	.3252
129	.2132	.9257	.6382	.3507	.0632	.7757	.4883	.2008	.6258	.0508	.4759	.9009	.3259
132	.2136	.9262	.6387	.3512	.0638	.7763	.4888	.2013	.6264	.0515	.4765	.9016	.3266
428135	70.2141	71.9267	73.6392	75.3518	77.0643	78.7768	80.4894	82.2019	85.6270	89.0521	92.4772	95.9022	99.3273
138	.2146	.9272	.6397	.3523	.0648	.7774	.4899	.2025	.6276	.0527	.4778	.9029	.3280
141	.2151	.9277	.6403	.3528	.0654	.7779	.4905	.2031	.6282	.0533	.4785	.9036	.3287
144	.2156	.9282	.6408	.3533	.0659	.7785	.4911	.2036	.6288	.0540	.4791	.9043	.3294
147	.2161	.9287	.6413	.3539	.0665	.7790	.4916	.2042	.6294	.0546	.4798	.9049	.3301
428150	70.2166	71.9292	73.6418	75.3544	77.0670	78.7796	80.4922	82.2048	85.6300	89.0552	92.4804	95.9056	99.3308
153	.2171	.9297	.6423	.3549	.0675	.7802	.4928	.2054	.6306	.0558	.4810	.9063	.3315
156	.2176	.9302	.6428	.3555	.0681	.7807	.4933	.2060	.6312	.0564	.4817	.9069	.3322
159	.2181	.9307	.6433	.3560	.0686	.7813	.4939	.2065	.6318	.0571	.4823	.9076	.3329
162	.2186	.9312	.6439	:3565	.0692	.7818	.4945	.2071	.6324	.0577	.4830	.9083	.3336
428165	70.2191	71.9317	73.6444	75.3570	77.0697	78.7824	80.4950	82.2077	85.6330	89.0583	92.4836	95.9090	99.3343
168	.2196	.9322	.6449	.3576	.0702	.7829	.4956	.2083	.6336	.0589	.4843	.9096	.3350
171	.2200	.9327	.6454	.3581	.0708	.7835	.4961	.2088	.6342	.0596	.4849	.9103	.3357
174	.2205	.9332	.6459	.3586	.0713	.7840	.4967	.2094	.6348	.0602	.4856	.9110	.3364
177	.2210	.9337	.6464	.3592	.0719	.7846	.4973	.2100	.6354	.0608	.4862	.9116	.3371
428180	70.2215	71.9342	73.6470	75.3597	77.0724	78.7851	80.4978	82.2106	85.6360	89.0614	92.4869	95.9123	99.3378
183	.2220	.9347	.6475	.3602	.0729	.7857	.4984	.2111	.6366	.0621	.4875	.9130	.3385
186	.2225	.9352	.6480	.3607	.0735	.7862	.4990	.2117	.6372	.0627	.4882	.9137	.3392
189	.2230	.9358	.6485	.3613	.0740	.7868	.4995	.2123	.6378	.0633	.4888	.9143	.3398
192	.2235	.9363	.6490	.3618	.0746	.7873	.5001	.2129	.6384	.0639	.4895	.9150	.3405
428195	70.2240	71.9368	73.6495	75.3623	77.0751	78.7879	80.5007	82.2134	85.6390	89.0646	92.4901	95.9157	99.3412
198	.2245	.9373	.6501	.3628	.0756	.7884	.5012	.2140	.6396	.0652	.4908	.9164	.3419
201	.2250	.9378	.6506	.3634	.0762	.7890	.5018	.2146	.6402	.0658	.4914	.9170	.3426
204	.2255	.9383	.6511	.3639	.0767	.7895	.5024	.2152	.6408	.0664	.4921	.9177	.3433
207	.2259	.9388	.6516	.3644	.0773	.7901	.5029	.2157	.6414	.0671	.4927	.9184	.3440
428210	70.2264	71.9393	73.6521	75.3650	77.0778	78.7906	80.5035	82.2163	85.6420	89.0677	92.4934	95.9190	99.3447
213	.2269	.9398	.6526	.3655	.0783	.7912	.5040	.2169	.6426	.0683	.4940	.9197	.3454
216	.2274	.9403	.6532	.3660	.0789	.7917	.5046	.2175	.6432	.0689	.4947	.9204	.3461
219	.2279	.9408	.6537	.3665	.0794	.7923	.5052	.2180	.6438	.0696	.4953	.9211	.3468
222	.2284	.9413	.6542	.3671	.0800	.7928	.5057	.2186	.6444	.0702	.4960	.9217	.3475
428225	70.2289	71.9418	73.6547	75.3676	77.0805	78.7934	80.5063	82.2192	85.6450	89.0708	92.4966	95.9224	99.3482
228	.2294	.9423	.6552	.3681	.0810	.7940	.5069	.2198	.6456	.0714	.4972	.9231	.3489
231	:2299	.9428	.6557	.3687	.0816	.7945	.5074	.2204	.6462	.0720	.4979	.9237	.3496
234	.2304	.9433	.6562	.3692	.0821	.7951	.5080	.2209	.6468	.0727	.4985	.9244	.3503
237	.2309	.9438	.6568	.3697	.0827	.7956	.5086	.2215	.6474	.0733	.4992	.9251	.3510
428240	70.2314	71.9443	73.6573	75.3702	77.0832	78.7962	80.5091	82.2221	85.6480	89.0739	92.4998	95.9258	99.3517
243	.2319	.9448	.6578	.3708	.0837	.7967	.5097	.2227	.6486	.0745	.5005	.9264	.3524
246	.2323	.9453	.6583	.3713	.0843	.7973	.5102	.2232	.6492	.0752	.5011	.9271	.3531
249	.2328	.9458	.6588	.3718	.0848	.7978	.5108	.2238	.6498	.0758	.5018	.9278	.3538
252	.2333	.9463	.6593	.3724	.0854	.7984	.5114	.2244	.6504	.0764	.5024	.9284	.3545
428255	70.2338	71.9468	73.6599	75.3729	77.0859	78.7989	80.5119	82.2250	85.6510	89.0770	92.5031	95.9291	99.3552
258	.2343	.9473	.6604	.3734	.0864	.7995	.5125	.2255	.6516	.0777	.5037	.9298	.3559
261	.2348	.9478	.6609	.3739	.0870	.8000	.5131	.2261	.6522	.0783	.5044	.9305	.3566
264	.2353	.9484	.6614	.3745	.0875	.8006	.5136	.2267	.6528	.0789	.5050	.9311	.3572
267	.2358	.9489	.6619	.3750	.0881	.8011	.5142	.2273	.6534	.0795	.5057	.9318	.3579
428270	70.2363	71.9494	73.6624	75.3755	77.0886	78.8017	80.5148	82.2278	85.6540	89.0802	92.5063	95.9325	99.3586
273	.2368	.9499	.6630	.3760	.0891	.8022	.5153	.2284	.6546	.0808	.5070	.9332	.3593
276	.2373	.9504	.6635	.3766	.0897	.8028	.5159	.2290	.6552	.0814	.5076	.9338	.3600
279	.2378	.9509	.6640	.3771	.0902	.8033	.5165	.2296	.6558	.0820	.5083	.9345	.3607
282	.2382	.9514	.6645	.3776	.0908	.8039	.5170	.2301	.6564	.0827	.5089	.9352	.3614
428285	70.2387	71.9519	73.6650	75.3782	77.0913	78.8044	80.5176	82.2307	85.6570	89.0833	92.5096	95.9358	99.3621
288	.2392	.9524	.6655	.3787	.0918	.8050	.5181	.2313	.6576	.0839	.5102	.9365	.3628
291	.2397	.9529	.6661	.3792	.0924	.8055	.5187	.2319	.6582	.0845	.5109	.9372	.3635
294	.2402	.9534	.6666	.3797	.0929	.8061	.5193	.2324	.6588	.0852	.5115	.9379	.3642
297	.2407	.9539	.6671	.3803	.0935	.8066	.5198	.2330	.6594	.0858	.5122	.9385	.3649
428300	70.2412	71.9544	73.6676	75.3808	77.0940	78.8072	80.5204	82.2336	85.6600	89.0864	92.5128	95.9392	99.3656

MEGACYCLES PER SECOND

HARMONICS

BASIC FREQ.	112	116	120	124	128	132	136	140	144	148	152	156	160
428300	47.9696	49.6828	51.3960	53.1092	54.8224	56.5356	58.2488	59.9620	61.6752	63.3884	65.1016	66.8148	68.5280
303	.9699	.6831	.3964	.1096	.8228	.5360	.2492	.9624	.6756	.3888	.1021	.8153	.5285
306	.9703	.6835	.3967	.1099	.8232	.5364	.2496	.9628	.6761	.3893	.1025	.8157	.5290
309	.9706	.6838	.3971	.1103	.8236	.5368	.2500	.9633	.6765	.3897	.1030	.8162	.5294
312	.9709	.6842	.3974	.1107	.8239	.5372	.2504	.9637	.6769	.3902	.1034	.8167	.5299
428315	47.9713	49.6845	51.3978	53.1111	54.8243	56.5376	58.2508	59.9641	61.6774	63.3906	65.1039	66.8171	68.5304
318	.9716	.6849	.3982	.1114	.8247	.5380	.2512	.9645	.6778	.3911	.1043	.8176	.5309
321	.9720	.6852	.3985	.1118	.8251	.5384	.2517	.9649	.6782	.3915	.1048	.8181	.5314
324	.9723	.6856	.3989	.1122	.8255	.5388	.2521	.9654	.6787	.3920	.1052	.8185	.5318
327	.9726	.6859	.3992	.1125	.8259	.5392	.2525	.9658	.6791	.3924	.1057	.8190	.5323
428330	47.9730	49.6863	51.3996	53.1129	54.8262	56.5396	58.2529	59.9662	61.6795	63.3928	65.1062	66.8195	68.5328
333	.9733	.6866	.4000	.1133	.8266	.5400	.2533	.9666	.6800	.3933	.1066	.8199	.5333
336	.9736	.6870	.4003	.1137	.8270	.5404	.2537	.9670	.6804	.3937	.1071	.8204	.5338
339	.9740	.6873	.4007	.1140	.8274	.5407	.2541	.9675	.6808	.3942	.1075	.8209	.5342
342	.9743	.6877	.4010	.1144	.8278	.5411	.2545	.9679	.6812	.3946	.1080	.8214	.5347
428345	47.9746	49.6880	51.4014	53.1148	54.8282	56.5415	58.2549	59.9683	61.6817	63.3951	65.1084	66.8218	68.5352
348	.9750	.6884	.4018	.1152	.8285	.5419	.2553	.9687	.6821	.3955	.1089	.8223	.5357
351	.9753	.6887	.4021	.1155	.8289	.5423	.2557	.9691	.6825	.3959	.1094	.8228	.5362
354	.9756	.6891	.4025	.1159	.8293	.5427	.2561	.9696	.6830	.3964	.1098	.8232	.5366
357	.9760	.6894	.4028	.1163	.8297	.5431	.2566	.9700	.6834	.3968	.1103	.8237	.5371
428360	47.9763	49.6898	51.4032	53.1166	54.8301	56.5435	58.2570	59.9704	61.6838	63.3973	65.1107	66.8242	68.5375
363	.9767	.6901	.4036	.1170	.8305	.5439	.2574	.9708	.6843	.3977	.1112	.8246	.5381
366	.9770	.6905	.4039	.1174	.8308	.5443	.2578	.9712	.6847	.3982	.1116	.8251	.5380
369	.9773	.6908	.4043	.1178	.8312	.5447	.2582	.9717	.6851	.3986	.1121	.8256	.5396
372	.9777	.6912	.4046	.1181	.8316	.5451	.2586	.9721	.6856	.3991	.1125	.8260	.5396
428375	47.9780	49.6915	51.4050	53.1185	54.8320	56.5455	58.2590	59.9725	61.6860	63.3995	65.1130	66.8265	68.5400
378	.9783	.6918	.4054	.1189	.8324	.5459	.2594	.9729	.6864	.3999	.1135	.8270	.5405
381	.9787	.6922	.4057	.1192	.8328	.5463	.2598	.9733	.6869	.4004	.1139	.8274	.5410
384	.9790	.6925	.4061	.1196	.8332	.5467	.2602	.9738	.6873	.4008	.1144	.8279	.5414
387	.9793	.6929	.4064	.1200	.8335	.5471	.2606	.9742	.6877	.4013	.1148	.8284	.5419
428390	47.9797	49.6932	51.4068	53.1204	54.8339	56.5475	58.2610	59.9746	61.6882	63.4017	65.1153	66.8288	68.5424
393	.9800	.6936	.4072	.1207	.8343	.5479	.2614	.9750	.6886	.4022	.1157	.8293	.5429
396	.9804	.6939	.4075	.1211	.8347	.5483	.2619	.9754	.6890	.4026	.1162	.8298	.5434
399	.9807	.6943	.4079	.1215	.8351	.5487	.2623	.9759	.6895	.4031	.1166	.8302	.5438
402	.9810	.6946	.4082	.1218	.8355	.5491	.2627	.9763	.6899	.4035	.1171	.8307	.5443
428405	47.9814	49.6950	51.4086	53.1222	54.8358	56.5495	58.2631	59.9767	61.6903	63.4039	65.1176	66.8312	68.5448
408	.9817	.6953	.4090	.1226	.8362	.5499	.2635	.9771	.6908	.4044	.1180	.8316	.5453
411	.9820	.6957	.4093	.1230	.8366	.5503	.2639	.9775	.6912	.4048	.1185	.8321	.5458
414	.9824	.6960	.4097	.1233	.8370	.5506	.2643	.9780	.6916	.4053	.1189	.8326	.5462
417	.9827	.6964	.4100	.1237	.8374	.5510	.2647	.9784	.6920	.4057	.1194	.8331	.5467
428420	47.9830	49.6967	51.4104	53.1241	54.8378	56.5514	58.2651	59.9788	61.6925	63.4062	65.1198	66.8335	68.5472
423	.9834	.6971	.4108	.1245	.8381	.5518	.2655	.9792	.6929	.4066	.1203	.8340	.5477
426	.9837	.6974	.4111	.1248	.8385	.5522	.2659	.9796	.6933	.4070	.1208	.8345	.5482
429	.9840	.6978	.4115	.1252	.8389	.5526	.2663	.9801	.6938	.4075	.1212	.8349	.5486
432	.9844	.6981	.4118	.1256	.8393	.5530	.2668	.9805	.6942	.4079	.1217	.8354	.5491
428435	47.9847	49.6985	51.4122	53.1259	54.8397	56.5534	58.2672	59.9809	61.6946	63.4084	65.1221	66.8359	68.5496
438	.9851	.6988	.4126	.1263	.8401	.5538	.2676	.9813	.6951	.4088	.1226	.8363	.5501
441	.9854	.6992	.4129	.1267	.8404	.5542	.2680	.9817	.6955	.4093	.1230	.8368	.5506
444	.9857	.6995	.4133	.1271	.8408	.5546	.2684	.9822	.6959	.4097	.1235	.8373	.5510
447	.9861	.6999	.4136	.1274	.8412	.5550	.2688	.9826	.6964	.4102	.1239	.8377	.5515
428450	47.9864	49.7002	51.4140	53.1278	54.8416	56.5554	58.2692	59.9830	61.6968	63.4106	65.1244	66.8382	68.5520
453	.9867	.7005	.4144	.1282	.8420	.5558	.2696	.9834	.6972	.4110	.1249	.8387	.5525
456	.9871	.7009	.4147	.1285	.8424	.5562	.2700	.9838	.6977	.4115	.1253	.8391	.5530
459	.9874	.7012	.4151	.1289	.8428	.5566	.2704	.9843	.6981	.4119	.1258	.8396	.5534
462	.9877	.7016	.4154	.1293	.8431	.5570	.2708	.9847	.6985	.4124	.1262	.8401	.5539
428465	47.9881	49.7019	51.4158	53.1297	54.8435	56.5574	58.2712	59.9851	61.6990	63.4128	65.1267	66.8405	68.5544
468	.9884	.7023	.4162	.1300	.8439	.5578	.2716	.9855	.6994	.4133	.1271	.8410	.5549
471	.9888	.7026	.4165	.1304	.8443	.5582	.2721	.9859	.6998	.4137	.1276	.8415	.5554
474	.9891	.7030	.4169	.1308	.8447	.5586	.2725	.9864	.7003	.4142	.1280	.8419	.5558
477	.9894	.7033	.4172	.1311	.8451	.5590	.2729	.9868	.7007	.4146	.1285	.8424	.5563
428480	47.9898	49.7037	51.4176	53.1315	54.8454	56.5594	58.2733	59.9872	61.7011	63.4150	65.1290	66.8429	68.5568
483	.9901	.7040	.4180	.1319	.8458	.5598	.2737	.9876	.7016	.4155	.1294	.8433	.5573
486	.9904	.7044	.4183	.1323	.8462	.5602	.2741	.9880	.7020	.4159	.1299	.8438	.5578
489	.9908	.7047	.4187	.1326	.8466	.5605	.2745	.9885	.7024	.4164	.1303	.8443	.5582
492	.9911	.7051	.4190	.1330	.8470	.5609	.2749	.9889	.7028	.4168	.1308	.8448	.5587
428495	47.9914	49.7054	51.4194	53.1334	54.8474	56.5613	58.2753	59.9893	61.7033	63.4173	65.1312	66.8452	68.5592
498	.9918	.7058	.4198	.1338	.8477	.5617	.2757	.9897	.7037	.4177	.1317	.8457	.5597
501	.9921	.7061	.4201	.1341	.8481	.5621	.2761	.9901	.7041	.4181	.1322	.8462	.5602
504	.9924	.7065	.4205	.1345	.8485	.5625	.2765	.9906	.7046	.4186	.1326	.8466	.5606
507	.9928	.7068	.4208	.1349	.8489	.5629	.2770	.9910	.7050	.4190	.1331	.8471	.5611
428510	47.9931	49.7072	51.4212	53.1352	54.8493	56.5633	58.2774	59.9914	61.7054	63.4195	65.1335	66.8476	68.5616
513	.9935	.7075	.4216	.1356	.8497	.5637	.2778	.9918	.7059	.4199	.1340	.8480	.5621
516	.9938	.7079	.4219	.1360	.8500	.5641	.2782	.9922	.7063	.4204	.1344	.8485	.5626
519	.9941	.7082	.4223	.1364	.8504	.5645	.2786	.9927	.7067	.4208	.1349	.8490	.5630
522	.9945	.7086	.4226	.1367	.8508	.5649	.2790	.9931	.7072	.4213	.1353	.8494	.5635
428525	47.9948	49.7089	51.4230	53.1371	54.8512	56.5653	58.2794	59.9935	61.7076	63.4217	65.1358	66.8499	68.5640
528	.9951	.7092	.4234	.1375	.8516	.5657	.2798	.9939	.7080	.4221	.1363	.8504	.5645
531	.9955	.7096	.4237	.1378	.8520	.5661	.2802	.9943	.7085	.4226	.1367	.8508	.5650
534	.9958	.7099	.4241	.1382	.8524	.5665	.2806	.9948	.7089	.4230	.1372	.8513	.5654
537	.9961	.7103	.4244	.1386	.8527	.5669	.2810	.9952	.7093	.4235	.1376	.8518	.5659
428540	47.9965	49.7106	51.4248	53.1390	54.8531	56.5673	58.2814	59.9956	61.7098	63.4239	65.1381	66.8522	68.5664
543	.9968	.7110	.4252	.1393	.8535	.5677	.2818	.9960	.7102	.4244	.1385	.8527	.5669
546	.9972	.7113	.4255	.1397	.8539	.5681	.2823	.9964	.7106	.4248	.1390	.8532	.5674
549	.9975	.7117	.4259	.1401	.8543	.5685	.2827	.9969	.7111	.4253	.1394	.8536	.5678
552	.9978	.7120	.4262	.1404	.8547	.5689	.2831	.9973	.7115	.4257	.1399	.8541	.5683
428555	47.9982	49.7124	51.4266	53.1408	54.8550	56.5693	58.2835	59.9977	61.7119	63.4261	65.1404	66.8546	68.5688
558	.9985	.7127	.4270	.1412	.8554	.5697	.2839	.9981	.7124	.4266	.1408	.8550	.5693
561	.9988	.7131	.4273	.1416	.8558	.5701	.2843	.9985	.7128	.4270	.1413	.8555	.5698
564	.9992	.7134	.4277	.1419	.8562	.5704	.2847	.9990	.7132	.4275	.1417	.8560	.5702
567	.9995	.7138	.4280	.1423	.8566	.5708	.2851	.9994	.7136	.4279	.1422	.8565	.5707
428570	47.9998	49.7141	51.4284	53.1427	54.8570	56.5712	58.2855	59.9998	61.7141	63.4284	65.1426	66.8569	68.5712
573	48.0002	.7145	.4288	.1431	.8573	.5716	.2859	60.0002	.7145	.4288	.1431	.8574	.5717
576	.0005	.7148	.4291	.1434	.8577	.5720	.2863	.0006	.7149	.4292	.1436	.8579	.5722
579	.0008	.7152	.4295	.1438	.8581	.5724	.2867	.0011	.7154	.4297	.1440	.8583	.5726
582	.0012	.7155	.4298	.1442	.8585	.5728	.2872	.0015	.7185	.4301	.1445	.8588	.5731
428585	48.0015	49.7159	51.4302	53.1445	54.8589	56.5732	58.2876	60.0019	61.7162	63.4306	65.1449	66.8593	68.5736
588	.0019	.7162	.4306	.1449	.8593	.5736	.2880	.0023	.7167	.4310	.1454	.8597	.5741
591	.0022	.7166	.4309	.1453	.8596	.5740	.2884	.0027	.7171	.4315	.1458	.8602	.5746
594	.0025	.7169	.4313	.1457	.8600	.5744	.2888	.0032	.7175	.4319	.1463	.8607	.5750
597	.0029	.7173	.4316	.1460	.8604	.5748	.2892	.0036	.7180	.4324	.1467	.8611	.5755
428600	48.0032	49.7176	51.4320	53.1464	54.8608	56.5752	58.2896	60.0040	61.7184	63.4328	65.1472	66.8616	68.5760

MEGACYCLES PER SECOND

H A R M O N I C S

BASIC FREQ.	164	168	172	176	180	184	188	192	200	208	216	224	232
428300	70.2412	71.9544	73.6676	75.3808	77.0940	78.8072	80.5204	82.2336	85.6600	89.0864	92.5128	95.9392	99.3656
303	.2417	.9549	.6681	.3813	.0945	.8078	.5210	.2342	.6606	.0870	.5134	.9399	.3663
306	.2422	.9554	.6686	.3819	.0951	.8083	.5215	.2348	.6612	.0876	.5141	.9405	.3670
309	.2427	.9559	.6691	.3824	.0956	.8089	.5221	.2353	.6618	.0883	.5147	.9412	.3677
312	.2432	.9564	.6697	.3829	.0962	.8094	.5227	.2359	.6624	.0889	.5154	.9419	.3684
428315	70.2437	71.9569	73.6702	75.3834	77.0967	78.8100	80.5232	82.2365	85.6630	89.0895	92.5160	95.9426	99.3691
318	.2442	.9574	.6707	.3840	.0972	.8105	.5238	.2371	.6636	.0901	.5167	.9432	.3698
321	.2446	.9579	.6712	.3845	.0978	.8111	.5243	.2376	.6642	.0908	.5173	.9439	.3705
324	.2451	.9584	.6717	.3850	.0983	.8116	.5249	.2382	.6648	.0914	.5180	.9446	.3712
327	.2456	.9589	.6722	.3856	.0989	.8122	.5255	.2388	.6654	.0920	.5186	.9452	.3719
428330	70.2461	71.9594	73.6728	75.3861	77.0994	78.8127	80.5260	82.2394	85.6660	89.0926	92.5193	95.9459	99.3726
333	.2466	.9599	.6733	.3866	.0999	.8133	.5266	.2399	.6666	.0933	.5199	.9466	.3733
336	.2471	.9604	.6738	.3871	.1005	.8138	.5272	.2405	.6672	.0939	.5206	.9473	.3740
339	.2476	.9610	.6743	.3877	.1010	.8144	.5277	.2411	.6678	.0945	.5112	.9479	.3746
342	.2481	.9615	.6748	.3882	.1016	.8149	.5283	.2417	.6684	.0951	.5219	.9486	.3753
428345	70.2486	71.9620	73.6753	75.3887	77.1021	78.8155	80.5289	82.2422	85.6690	89.0958	92.5225	95.9493	99.3760
348	.2491	.9625	.6759	.3892	.1026	.8160	.5294	.2428	.6696	.0964	.5232	.9500	.3767
351	.2496	.9630	.6764	.3898	.1032	.8166	.5300	.2434	.6702	.0970	.5238	.9506	.3774
354	.2501	.9635	.6769	.3903	.1037	.8171	.5306	.2440	.6708	.0976	.5245	.9513	.3781
357	.2505	.9640	.6774	.3908	.1043	.8177	.5311	.2445	.6714	.0983	.5251	.9520	.3788
428360	70.2510	71.9645	73.6779	75.3914	77.1048	78.8182	80.5317	82.2451	85.6720	89.0989	92.5258	95.9526	99.3795
363	.2515	.9650	.6784	.3919	.1053	.8188	.5322	.2457	.6726	.0995	.5264	.9533	.3802
366	.2520	.9655	.6790	.3924	.1059	.8193	.5328	.2463	.6732	.1001	.5271	.9540	.3809
369	.2525	.9660	.6795	.3929	.1064	.8199	.5334	.2468	.6738	.1008	.5277	.9547	.3816
372	.2530	.9665	.6800	.3935	.1070	.8204	.5339	.2474	.6744	.1014	.5284	.9553	.3823
428375	70.2535	71.9670	73.6805	75.3940	77.1075	78.8210	80.5345	82.2480	85.6750	89.1020	92.5290	95.9560	99.3830
378	.2540	.9675	.6810	.3945	.1080	.8216	.5351	.2486	.6756	.1026	.5296	.9567	.3837
381	.2545	.9680	.6815	.3951	.1086	.8221	.5356	.2492	.6762	.1032	.5303	.9573	.3844
384	.2550	.9685	.6820	.3956	.1091	.8227	.5362	.2497	.6768	.1039	.5309	.9580	.3851
387	.2555	.9690	.6826	.3961	.1097	.8232	.5368	.2503	.6774	.1045	.5316	.9587	.3858
428390	70.2560	71.9695	73.6831	75.3966	77.1102	78.8238	80.5373	82.2509	85.6780	89.1051	92.5322	95.9594	99.3865
393	.2565	.9700	.6836	.3972	.1107	.8243	.5379	.2515	.6786	.1057	.5329	.9600	.3872
396	.2569	.9705	.6841	.3977	.1113	.9249	.5384	.2520	.6792	.1064	.5335	.9607	.3879
399	.2574	.9710	.6846	.3982	.1118	.8254	.5390	.2526	.6798	.1070	.5342	.9614	.3886
402	.2579	.9715	.6851	.3988	.1124	.8260	.5396	.2532	.6804	.1076	.5348	.9620	.3893
428405	70.2584	71.9720	73.6857	75.3993	77.1129	78.8265	80.5401	82.2538	85.6810	89.1082	92.5355	95.9627	99.3900
408	.2589	.9725	.6862	.3998	.1134	.8271	.5407	.2543	.6816	.1089	.5361	.9634	.3907
411	.2594	.9730	.6867	.4003	.1140	.8276	.5413	.2549	.6822	.1095	.5368	.9641	.3914
414	.2599	.9736	.6872	.4009	.1145	.8282	.5418	.2555	.6828	.1101	.5374	.9647	.3920
417	.2604	.9741	.6877	.4014	.1151	.8287	.5424	.2561	.6834	.1107	.5381	.9654	.3927
428420	70.2609	71.9746	73.6882	75.4019	77.1156	78.8293	80.5430	82.2566	85.6840	89.1114	92.5387	95.9661	99.3934
423	.2614	.9751	.6888	.4024	.1161	.8298	.5435	.2572	.6846	.1120	.5394	.9668	.3941
426	.2619	.9756	.6893	.4030	.1167	.8304	.5441	.2578	.6852	.1126	.5400	.9674	.3948
429	.2624	.9761	.6898	.4035	.1172	.8309	.5447	.2584	.6858	.1132	.5407	.9681	.3955
432	.2628	.9766	.6903	.4040	.1178	.8315	.5452	.2589	.6864	.1139	.5413	.9688	.3962
428435	70.2633	71.9771	73.6908	75.4046	77.1183	78.8320	80.5458	82.2595	85.6870	89.1145	92.5420	95.9694	99.3969
438	.2638	.9776	.6913	.4051	.1188	.8326	.5463	.2601	.6876	.1151	.5426	.9701	.3976
441	.2643	.9781	.6919	.4056	.1194	.8331	.5469	.2607	.6882	.1157	.5433	.9708	.3983
444	.2648	.9786	.6924	.4061	.1199	.8337	.5475	.2612	.6888	.1164	.5439	.9715	.3990
447	.2653	.9791	.6929	.4067	.1205	.8342	.5480	.2618	.6894	.1170	.5446	.9721	.3997
428450	70.2658	71.9796	73.6934	75.4072	77.1210	78.8348	80.5486	82.2624	85.6900	89.1176	92.5452	95.9728	99.4004
453	.2663	.9801	.6939	.4077	.1215	.8354	.5492	.2630	.6906	.1182	.5458	.9735	.4011
456	.2668	.9806	.6944	.4083	.1221	.8359	.5497	.2636	.6912	.1188	.5465	.9741	.4018
459	.2673	.9811	.6949	.4088	.1226	.8365	.5503	.2641	.6918	.1195	.5471	.9748	.4025
462	.2678	.9816	.6955	.4093	.1232	.8370	.5509	.2647	.6924	.1201	.5478	.9755	.4032
428465	70.2683	71.9821	73.6960	75.4098	77.1237	78.8376	80.5514	82.2653	85.6930	89.1207	92.5484	95.9762	99.4039
468	.2688	.9826	.6965	.4104	.1242	.8381	.5520	.2659	.6936	.1213	.5491	.9768	.4046
471	.2692	.9831	.6970	.4109	.1248	.8387	.5525	.2664	.6942	.1220	.5497	.9775	.4053
474	.2697	.9836	.6975	.4114	.1253	.8392	.5531	.2670	.6948	.1226	.5504	.9782	.4060
477	.2702	.9841	.6980	.4120	.1259	.8398	.5537	.2676	.6954	.1232	.5510	.9788	.4067
428480	70.2707	71.9846	73.6986	75.4125	77.1264	78.8403	80.5542	82.2682	85.6960	89.1238	92.5517	95.9795	99.4074
483	.2712	.9851	.6991	.4130	.1269	.8409	.5548	.2687	.6966	.1245	.5523	.9802	.4081
486	.2717	.9856	.6996	.4135	.1275	.8414	.5554	.2693	.6972	.1251	.5530	.9809	.4088
489	.2722	.9862	.7001	.4141	.1280	.8420	.5559	.2699	.6978	.1257	.5536	.9815	.4094
492	.2727	.9867	.7006	.4146	.1286	.8425	.5565	.2705	.6984	.1263	.5543	.9822	.4101
428495	70.2732	71.9872	73.7011	75.4151	77.1291	78.8431	80.5571	82.2710	85.6990	89.1270	92.5549	95.9829	99.4108
498	.2737	.9877	.7017	.4156	.1296	.8436	.5576	.2716	.6996	.1276	.5556	.9836	.4115
501	.2742	.9882	.7022	.4162	.1302	.8442	.5582	.2722	.7002	.1282	.5562	.9842	.4122
504	.2747	.9887	.7027	.4167	.1307	.8447	.5588	.2728	.7008	.1288	.5569	.9849	.4129
507	.2751	.9892	.7032	.4172	.1313	.8453	.5593	.2733	.7014	.1295	.5575	.9856	.4136
428510	70.2756	71.9897	73.7037	75.4178	77.1318	78.8458	80.5599	82.2739	85.7020	89.1301	92.5582	95.9862	99.4143
513	.2761	.9902	.7042	.4183	.1323	.8464	.5604	.2745	.7026	.1307	.5588	.9869	.4150
516	.2766	.9907	.7048	.4188	.1329	.8469	.5610	.2751	.7032	.1313	.5595	.9876	.4157
519	.2771	.9912	.7053	.4193	.1334	.8475	.5616	.2756	.7038	.1320	.5601	.9883	.4164
522	.2776	.9917	.7058	.4199	.1340	.8480	.5621	.2762	.7044	.1326	.5608	.9889	.4171
428525	70.2781	71.9922	73.7063	75.4204	77.1345	78.8486	80.5627	82.2768	85.7050	89.1332	92.5614	95.9896	99.4178
528	.2786	.9927	.7068	.4209	.1350	.8492	.5633	.2774	.7056	.1338	.5620	.9903	.4185
531	.2791	.9932	.7073	.4215	.1356	.8497	.5638	.2780	.7062	.1344	.5627	.9909	.4192
534	.2796	.9937	.7078	.4220	.1361	.8503	.5644	.2785	.7068	.1351	.5633	.9916	.4199
537	.2801	.9942	.7084	.4225	.1367	.8508	.5650	.2791	.7074	.1357	.5640	.9923	.4206
428540	70.2806	71.9947	73.7089	75.4230	77.1372	78.8514	80.5655	82.2797	85.7080	89.1363	92.5646	95.9930	99.4213
543	.2811	.9952	.7094	.4236	.1377	.8519	.5661	.2803	.7086	.1369	.5653	.9936	.4220
546	.2815	.9957	.7099	.4241	.1383	.8525	.5666	.2808	.7092	.1376	.5659	.9943	.4227
549	.2820	.9962	.7104	.4246	.1388	.8530	.5672	.2814	.7098	.1382	.5666	.9950	.4234
552	.2825	.9967	.7109	.4252	.1394	.8536	.5678	.2820	.7104	.1388	.5672	.9956	.4241
428555	70.2830	71.9972	73.7115	75.4257	77.1399	78.8541	80.5683	82.2826	85.7110	89.1394	92.5679	95.9963	99.4248
558	.2835	.9977	.7120	.5262	.1404	.8547	.5689	.2831	.7116	.1401	.5685	.9970	.4255
561	.2840	.9982	.7125	.4267	.1410	.8552	.5695	.2837	.7122	.1407	.5692	.9977	.4262
564	.2845	.9988	.7130	.4273	.1415	.8558	.5700	.2843	.7128	.1413	.5698	.9983	.4268
567	.2850	.9993	.7135	.4278	.1421	.8563	.5706	.2849	.7134	.1419	.5705	.9990	.4275
428570	70.2855	71.9998	73.7140	75.4283	77.1426	78.8569	80.5712	82.2854	85.7140	89.1426	92.5711	95.9997	99.4282
573	.2860	72.0003	.7146	.4288	.1431	.8574	.5717	.2860	.7146	.1432	.5718	96.0004	.4289
576	.2865	.0008	.7151	.4294	.1437	.8580	.5723	.2866	.7152	.1438	.5724	.0010	.4296
579	.2870	.0013	.7156	.4299	.1442	.8585	.5729	.2872	.7158	.1444	.5731	.0017	.4303
582	.2874	.0018	.7161	.4304	.1448	.8591	.5734	.2877	.7164	.1451	.5737	.0024	.4310
428585	70.2879	72.0023	73.7166	75.4310	77.1453	78.8596	80.5740	82.2883	85.7170	89.1457	92.5744	96.0030	99.4317
588	.2884	.0028	.7171	.4315	.1458	.8602	.5745	.2889	.7176	.1463	.5750	.0037	.4324
591	.2889	.0033	.7177	.4320	.1464	.8607	.5751	.2895	.7182	.1469	.5757	.0044	.4331
594	.2894	.0038	.7182	.4325	.1469	.8613	.5757	.2900	.7188	.1476	.5763	.0051	.4338
597	.2899	.0043	.7187	.4331	.1475	.8618	.5762	.2906	.7194	.1482	.5770	.0057	.4345
428600	70.2904	72.0048	73.7192	75.4336	77.1480	78.8624	80.5768	82.2912	85.7200	89.1488	92.5776	96.0064	99.4352

HARMONICS

BASIC FREQ.	112	116	120	124	128	132	136	140	144	148	152	156	160
428600	48.0032	49.7176	51.4320	53.1464	54.8608	56.5752	58.2896	60.0040	61.7184	63.4328	65.1472	66.8616	68.5760
603	.0035	.7179	.4324	.1468	.8612	.5756	.2900	.0044	.7188	.4332	.1477	.8621	.5765
606	.0039	.7183	.4327	.1471	.8616	.5760	.2904	.0048	.7193	.4337	.1481	.8625	.5770
609	.0042	.7186	.4331	.1475	.8620	.5764	.2908	.0053	.7197	.4341	.1486	.8630	.5774
612	.0045	.7190	.4334	.1479	.8623	.5768	.2912	.0057	.7201	.4346	.1490	.8635	.5779
428615	48.0049	49.7193	51.4338	53.1483	54.8627	56.5772	58.2916	60.0061	61.7206	63.4350	65.1495	66.8639	68.5784
618	.0052	.7197	.4342	.1486	.8631	.5776	.2920	.0065	.7210	.4355	.1499	.8644	.5789
621	.0056	.7200	.4345	.1490	.8635	.5780	.2925	.0069	.7214	.4359	.1504	.8649	.5794
624	.0059	.7204	.4349	.1494	.8639	.5784	.2929	.0074	.7219	.4364	.1508	.8653	.5798
627	.0062	.7207	.4352	.1497	.8643	.5788	.2933	.0078	.7223	.4368	.1513	.8658	.5803
428630	48.0066	49.7211	51.4356	53.1501	54.8646	56.5792	58.2937	60.0082	61.7227	63.4372	65.1518	66.8663	68.5808
633	.0069	.7214	.4360	.1505	.8650	.5796	.2941	.0086	.7232	.4377	.1522	.8667	.5813
636	.0072	.7218	.4363	.1509	.8654	.5800	.2945	.0090	.7236	.4381	.1527	.8672	.5818
639	.0076	.7221	.4367	.1512	.8658	.5803	.2949	.0095	.7240	.4386	.1531	.8677	.5822
642	.0079	.7225	.4370	.1516	.8662	.5807	.2953	.0099	.7244	.4390	.1536	.8682	.5827
428645	48.0082	49.7228	51.4374	53.1520	54.8666	56.5811	58.2957	60.0103	61.7249	63.4395	65.1540	66.8686	68.5882
648	.0086	.7232	.4378	.1524	.8669	.5815	.2961	.0107	.7253	.4399	.1545	.8691	.5837
651	.0089	.7235	.4381	.1527	.8673	.5819	.2965	.0111	.7257	.4403	.1550	.8696	.5842
654	.0092	.7239	.4385	.1531	.8677	.5823	.2969	.0116	.7262	.4408	.1554	.8700	.5846
657	.0096	.7242	.4388	.1535	.8681	.5827	.2974	.0120	.7266	.4412	.1559	.8705	.5851
428660	48.0099	49.7246	51.4392	53.1538	54.8685	56.5831	58.2978	60.0124	61.7270	63.4417	65.1563	66.8710	68.5856
663	.0103	.7249	.4396	.1542	.8689	.5835	.2982	.0128	.7275	.4421	.1568	.8714	.5861
666	.0106	.7253	.4399	.1546	.8692	.5839	.2986	.0132	.7279	.4426	.1572	.8719	.5866
669	.0109	.7256	.4403	.1550	.8696	.5843	.2990	.0137	.7283	.4430	.1577	.8724	.5870
672	.0113	.7260	.4406	.1553	.8700	.5847	.2994	.0141	.7288	.4435	.1581	.8728	.5875
428675	48.0116	49.7263	51.4410	53.1557	54.8704	56.5851	58.2998	60.0145	61.7292	63.4439	65.1586	66.8733	68.5880
678	.0119	.7266	.4414	.1561	.8708	.5855	.3002	.0149	.7296	.4443	.1591	.8738	.5885
681	.0123	.7270	.4417	.1564	.8712	.5859	.3006	.0153	.7301	.4448	.1595	.8742	.5890
684	.0126	.7273	.4421	.1568	.8716	.5863	.3010	.0158	.7305	.4452	.1600	.8747	.5894
687	.0129	.7277	.4424	.1572	.8719	.5867	.3014	.0162	.7309	.4457	.1604	.8752	.5899
428690	48.0133	49.7280	51.4428	53.1576	54.8723	56.5871	58.3018	60.0166	61.7314	63.4461	65.1609	66.8756	68.5904
693	.0136	.7284	.4432	.1579	.8727	.5875	.3022	.0170	.7318	.4466	.1613	.8761	.5909
696	.0140	.7287	.4435	.1583	.8731	.5879	.3027	.0174	.7322	.4470	.1618	.8766	.5914
699	.0143	.7291	.4439	.1587	.8735	.5883	.3031	.0179	.7327	.4475	.1622	.8770	.5918
702	.0146	.7294	.4442	.1590	.8739	.5887	.3035	.0183	.7331	.4479	.1627	.8775	.5923
428705	48.0150	49.7298	51.4446	53.1594	54.8742	56.5891	58.3039	60.0187	61.7335	63.4483	65.1632	66.8780	68.5928
708	.0153	.7301	.4450	.1598	.8746	.5895	.3043	.0191	.7340	.4488	.1636	.8784	.5933
711	.0156	.7305	.4453	.1602	.8750	.5899	.3047	.0195	.7344	.4492	.1641	.8789	.5938
714	.0160	.7308	.4457	.1605	.8754	.5902	.3051	.0200	.7348	.4497	.1645	.8794	.5942
717	.0163	.7312	.4460	.1609	.8758	.5906	.3055	.0204	.7352	.4501	.1650	.8799	.5947
428720	48.0166	49.7315	51.4464	53.1613	54.8762	56.5910	58.3059	60.0208	61.7357	63.4506	65.1654	66.8803	68.5952
723	.0170	.7319	.4468	.1617	.8765	.5914	.3063	.0212	.7361	.4510	.1659	.8808	.5957
726	.0173	.7322	.4471	.1620	.8769	.5918	.3067	.0216	.7365	.4514	.1664	.8813	.5962
729	.0176	.7326	.4475	.1624	.8773	.5922	.3071	.0221	.7370	.4519	.1668	.8817	.5966
732	.0180	.7329	.4478	.1628	.8777	.5926	.3076	.0225	.7374	.4523	.1673	.8822	.5971
428735	48.0183	49.7333	51.4482	53.1631	54.8781	56.5930	58.3080	60.0229	61.7378	63.4528	65.1677	66.8827	68.5976
738	.0187	.7336	.4486	.1635	.8785	.5934	.3084	.0233	.7383	.4532	.1682	.8831	.5981
741	.0190	.7340	.4489	.1639	.8788	.5938	.3088	.0237	.7387	.4537	.1686	.8836	.5986
744	.0193	.7343	.4493	.1643	.8792	.5942	.3092	.0242	.7391	.4541	.1691	.8841	.5990
747	.0197	.7347	.4496	.1646	.8796	.5946	.3096	.0246	.7396	.4546	.1695	.8845	.5995
428750	48.0200	49.7350	51.4500	53.1650	54.8800	56.5950	58.3100	60.0250	61.7400	63.4550	65.1700	66.8850	68.6000
753	.0203	.7353	.4504	.1654	.8804	.5954	.3104	.0254	.7404	.4554	.1705	.8855	.6005
756	.0207	.7357	.4507	.1657	.8808	.5958	.3108	.0258	.7409	.4559	.1709	.8859	.6010
759	.0210	.7360	.4511	.1661	.8812	.5962	.3112	.0263	.7413	.4563	.1714	.8864	.6014
762	.0213	.7364	.4514	.1665	.8815	.5966	.3116	.0267	.7417	.4568	.1718	.8869	.6019
428765	48.0217	49.7367	51.4518	53.1669	54.8819	56.5970	58.3120	60.0271	61.7422	63.4572	65.1723	66.8873	68.6024
768	.0220	.7371	.4522	.1672	.8823	.5974	.3124	.0275	.7426	.4577	.1727	.8878	.6029
771	.0224	.7374	.4525	.1676	.8827	.5978	.3129	.0279	.7430	.4581	.1732	.8883	.6034
774	.0227	.7378	.4529	.1680	.8831	.5982	.3133	.0284	.7435	.4586	.1736	.8887	.6038
777	.0230	.7381	.4532	.1683	.8835	.5986	.3137	.0288	.7439	.4590	.1741	.8892	.6043
428780	48.0234	49.7385	51.4536	53.1687	54.8838	56.5990	58.3141	60.0292	61.7443	63.4594	65.1746	66.8897	68.6048
783	.0237	.7388	.4540	.1691	.8842	.5994	.3145	.0296	.7448	.4599	.1750	.8901	.6053
786	.0240	.7392	.4543	.1695	.8846	.5998	.3149	.0300	.7452	.4603	.1755	.8906	.6058
789	.0244	.7395	.4547	.1698	.8850	.6001	.3153	.0305	.7456	.4608	.1759	.8911	.6062
792	.0247	.7399	.4550	.1702	.8854	.6005	.3157	.0309	.7460	.4612	.1764	.8916	.6067
428795	48.0250	49.7402	51.4554	53.1706	54.8858	56.6009	58.3161	60.0313	61.7465	63.4617	65.1768	66.8920	68.6072
798	.0254	.7406	.4558	.1710	.8861	.6013	.3165	.0317	.7469	.4621	.1773	.8925	.6077
801	.0257	.7409	.4561	.1713	.8865	.6017	.3169	.0321	.7473	.4625	.1778	.8930	.6082
804	.0260	.7413	.4565	.1717	.8869	.6021	.3173	.0326	.7478	.4630	.1782	.8934	.6086
807	.0264	.7416	.4568	.1721	.8873	.6025	.3178	.0330	.7482	.4634	.1787	.8939	.6091
428810	48.0267	49.7420	51.4572	53.1724	54.8877	56.6029	58.3182	60.0334	61.7486	63.4639	65.1791	66.8944	68.6096
813	.0271	.7423	.4576	.1728	.8881	.6033	.3186	.0338	.7491	.4643	.1796	.8948	.6101
816	.0274	.7427	.4579	.1732	.8884	.6037	.3190	.0342	.7495	.4648	.1800	.8953	.6106
819	.0277	.7430	.4583	.1736	.8888	.6041	.3194	.0347	.7499	.4652	.1805	.8958	.6110
822	.0281	.7434	.4586	.1739	.8892	.6045	.3198	.0351	.7504	.4657	.1809	.8962	.6115
428825	48.0284	49.7437	51.4590	53.1743	54.8896	56.6049	58.3202	60.0355	61.7508	63.4661	65.1814	66.8967	68.6120
828	.0287	.7440	.4594	.1747	.8900	.6053	.3206	.0359	.7512	.4665	.1819	.8972	.6125
831	.0291	.7444	.4597	.1750	.8904	.6057	.3210	.0363	.7517	.4670	.1823	.8976	.6130
834	.0294	.7447	.4601	.1754	.8908	.6061	.3214	.0368	.7521	.4674	.1828	.8981	.6134
837	.0297	.7451	.4604	.1758	.8911	.6065	.3218	.0372	.7525	.4679	.1832	.8986	.6139
428840	48.0301	49.7454	51.4608	53.1762	54.8915	56.6069	58.3222	60.0376	61.7530	63.4683	65.1837	66.8990	68.6144
843	.0304	.7458	.4612	.1765	.8919	.6073	.3226	.0380	.7534	.4688	.1841	.8995	.6149
846	.0308	.7461	.4615	.1769	.8923	.6077	.3231	.0384	.7538	.4692	.1846	.9000	.6154
849	.0311	.7465	.4619	.1773	.8927	.6081	.3235	.0389	.7543	.4697	.1850	.9004	.6158
852	.0314	.7468	.4622	.1776	.8931	.6085	.3239	.0393	.7547	.4701	.1855	.9009	.6163
428855	48.0318	49.7472	51.4626	53.1780	54.8934	56.6089	58.3243	60.0397	61.7551	63.4705	65.1860	66.9014	68.6168
858	.0321	.7475	.4630	.1784	.8938	.6093	.3247	.0401	.7556	.4710	.1864	.9018	.6173
861	.0324	.7479	.4633	.1788	.8942	.6097	.3251	.0405	.7560	.4714	.1869	.9023	.6178
864	.0328	.7482	.4637	.1791	.8946	.6100	.3255	.0410	.7564	.4719	.1873	.9028	.6182
867	.0331	.7486	.4640	.1795	.8950	.6104	.3259	.0414	.7568	.4723	.1878	.9033	.6187
428870	48.0334	49.7489	51.4644	53.1799	54.8954	56.6108	58.3263	60.0418	61.7573	63.4728	65.1882	66.9037	68.6192
873	.0338	.7493	.4648	.1803	.8957	.6112	.3267	.0422	.7577	.4732	.1887	.9042	.6197
876	.0341	.7496	.4651	.1806	.8961	.6116	.3271	.0426	.7581	.4736	.1892	.9047	.6202
879	.0344	.7500	.4655	.1810	.8965	.6120	.3275	.0431	.7586	.4741	.1896	.9051	.6206
882	.0348	.7503	.4658	.1814	.8969	.6124	.3280	.0435	.7590	.4745	.1901	.9056	.6211
428885	48.0351	49.7507	51.4662	53.1817	54.8973	56.6128	58.3284	60.0439	61.7594	63.4750	65.1905	66.9061	68.6216
888	.0355	.7510	.4666	.1821	.8977	.6132	.3288	.0443	.7599	.4754	.1910	.9065	.6221
891	.0358	.7514	.4669	.1825	.8980	.6136	.3292	.0447	.7603	.4759	.1914	.9070	.6226
894	.0361	.7517	.4673	.1829	.8984	.6140	.3296	.0452	.7607	.4763	.1919	.9075	.6230
897	.0365	.7521	.4676	.1832	.8988	.6144	.3300	.0456	.7612	.4768	.1923	.9079	.6235
428900	48.0368	49.7524	51.4680	53.1836	54.8992	56.6148	58.3304	60.0460	61.7616	63.4772	65.1928	66.9084	68.6240

MEGACYCLES PER SECOND

H A R M O N I C S

BASIC FREQ.	164	168	172	176	180	184	188	192	200	208	216	224	232
428600	70.2904	72.0048	73.7192	75.4336	77.1480	78.8624	80.5768	82.2912	85.7200	89.1488	92.5776	96.0064	99.4352
603	.2909	.0053	.7197	.4341	.1485	.8630	.5774	.2918	.7206	.1494	.5782	.0071	.4359
606	.2914	.0058	.7202	.4347	.1491	.8635	.5779	.2924	.7212	.1500	.5789	.0077	.4366
609	.2919	.0063	.7207	.4352	.1496	.8641	.5785	.2929	.7218	.1507	.5795	.0084	.4373
612	.2924	.0068	.7213	.4357	.1502	.8646	.5791	.2935	.7224	.1513	.5802	.0091	.4380
428615	70.2929	72.0073	73.7218	75.4362	77.1507	78.8652	80.5796	82.2941	85.7230	89.1519	92.5808	96.0098	99.4387
618	.2934	.0078	.7223	.4368	.1512	.8657	.5802	.2947	.7236	.1525	.5815	.0104	.4394
621	.2938	.0083	.7228	.4373	.1518	.8663	.5807	.2952	.7242	.1532	.5821	.0111	.4401
624	.2943	.0088	.7233	.4378	.1523	.8668	.5813	.2958	.7248	.1538	.5828	.0118	.4408
627	.2948	.0093	.7238	.4384	.1529	.8674	.5819	.2964	.7254	.1544	.5834	.0124	.4415
428630	70.2953	72.0098	73.7244	75.4389	77.1534	78.8679	80.5824	82.2970	85.7260	89.1550	92.5841	96.0131	99.4422
633	.2958	.0103	.7249	.4394	.1539	.8685	.5830	.2975	.7266	.1557	.5847	.0138	.4429
636	.2963	.0108	.7254	.4399	.1545	.8690	.5836	.2981	.7272	.1563	.5854	.0145	.4436
639	.2968	.0114	.7259	.4405	.1550	.8696	.5841	.2987	.7278	.1569	.5860	.0151	.4442
642	.2973	.0119	.7264	.4410	.1556	.8701	.5847	.2993	.7284	.1575	.5867	.0158	.4449
428645	70.2978	72.0124	73.7269	75.4415	77.1561	78.8707	80.5853	82.2998	85.7290	89.1582	92.5873	96.0165	99.4456
648	.2983	.0129	.7275	.4420	.1566	.8712	.5858	.3004	.7296	.1588	.5880	.0172	.4463
651	.2988	.0134	.7280	.4426	.1572	.8718	.5864	.3010	.7302	.1594	.5886	.0178	.4470
654	.2993	.0139	.7285	.4431	.1577	.8723	.5870	.3016	.7308	.1600	.5893	.0185	.4477
657	.2997	.0144	.7290	.4436	.1583	.8729	.5875	.3021	.7314	.1607	.5899	.0192	.4484
428660	70.3002	72.0149	73.7295	75.4442	77.1588	78.8734	80.5881	82.3027	85.7320	89.1613	92.5906	96.0198	99.4491
663	.3007	.0154	.7300	.4447	.1593	.8740	.5886	.3033	.7326	.1619	.5912	.0205	.4498
666	.3012	.0159	.7306	.4452	.1599	.8745	.5892	.3039	.7332	.1625	.5919	.0212	.4505
669	.3017	.0164	.7311	.4457	.1604	.8751	.5898	.3044	.7338	.1632	.5925	.0219	.4512
672	.3022	.0169	.7316	.4463	.1610	.8756	.5903	.3050	.7344	.1638	.5932	.0225	.4519
428675	70.3027	72.0174	73.7321	75.4468	77.1615	78.8762	80.5909	82.3056	85.7350	89.1644	92.5938	96.0232	99.4526
678	.3032	.0179	.7326	.4473	.1620	.8768	.5915	.3062	.7356	.1650	.5944	.0239	.4533
681	.3037	.0184	.7331	.4479	.1626	.8773	.5920	.3068	.7362	.1656	.5951	.0245	.4540
684	.3042	.0189	.7336	.4484	.1631	.8779	.5926	.3073	.7368	.1663	.5957	.0252	.4547
687	.3047	.0194	.7342	.4489	.1637	.8784	.5932	.3079	.7374	.1669	.5964	.0259	.4554
428690	70.3052	72.0199	73.7347	75.4494	77.1642	78.8790	80.5937	82.3085	85.7380	89.1675	92.5970	96.0266	99.4561
693	.3057	.0204	.7352	.4500	.1647	.8795	.5943	.3091	.7386	.1681	.5977	.0272	.4568
696	.3061	.0209	.7357	.4505	.1653	.8801	.5948	.3096	.7392	.1688	.5983	.0279	.4575
699	.3066	.0214	.7362	.4510	.1658	.8806	.5954	.3102	.7398	.1694	.5990	.0286	.4582
702	.3071	.0219	.7367	.4516	.1664	.8812	.5960	.3108	.7404	.1700	.5996	.0292	.4589
428705	70.3076	72.0224	73.7373	75.4521	77.1669	78.8817	80.5965	82.3114	85.7410	89.1706	92.6003	96.0299	99.4596
708	.3081	.0229	.7378	.4526	.1674	.8823	.5971	.3119	.7416	.1713	.6009	.0306	.4603
711	.3086	.0234	.7383	.4531	.1680	.8828	.5977	.3125	.7422	.1719	.6016	.0313	.4610
714	.3091	.0240	.7388	.4537	.1685	.8834	.5982	.3131	.7428	.1725	.6022	.0319	.4616
717	.3096	.0245	.7393	.4542	.1691	.8839	.5988	.3137	.7434	.1731	.6029	.0326	.4623
428720	70.3101	72.0250	73.7398	75.4547	77.1696	78.8845	80.5994	82.3142	85.7440	89.1738	92.6035	96.0333	99.4630
723	.3106	.0255	.7404	.4552	.1701	.8850	.5999	.3148	.7446	.1744	.6042	.0340	.4637
726	.3111	.0260	.7409	.4558	.1707	.8856	.6005	.3154	.7452	.1750	.6048	.0346	.4644
729	.3116	.0265	.7414	.4563	.1712	.8861	.6011	.3160	.7458	.1756	.6055	.0353	.4651
732	.3120	.0270	.7419	.4568	.1718	.8867	.6016	.3165	.7464	.1763	.6061	.0360	.4658
428735	70.3125	72.0275	73.7424	75.4574	77.1723	78.8872	80.6022	82.3171	85.7470	89.1769	92.6068	96.0366	99.4665
738	.3130	.0280	.7429	.4579	.1728	.8878	.6027	.3177	.7476	.1775	.6074	.0373	.4672
741	.3135	.0285	.7435	.4584	.1734	.8883	.6033	.3183	.7482	.1781	.6081	.0380	.4679
744	.3140	.0290	.7440	.4589	.1739	.8889	.6039	.3188	.7488	.1788	.6087	.0387	.4686
747	.3145	.0295	.7445	.4595	.1745	.8894	.6044	.3194	.7494	.1794	.6094	.0393	.4693
428750	70.3150	72.0300	73.7450	75.4600	77.1750	78.8900	80.6050	82.3200	85.7500	89.1800	92.6100	96.0400	99.4700
753	.3155	.0305	.7455	.4605	.1755	.8906	.6056	.3206	.7506	.1806	.6106	.0407	.4707
756	.3160	.0310	.7460	.4611	.1761	.8911	.6061	.3212	.7512	.1812	.6113	.0413	.4714
759	.3165	.0315	.7465	.4616	.1766	.8917	.6067	.3217	.7518	.1819	.6119	.0420	.4721
762	.3170	.0320	.7471	.4621	.1772	.8922	.6073	.3223	.7524	.1825	.6126	.0427	.4728
428765	70.3175	72.0325	73.7476	75.4626	77.1777	78.8928	80.6078	82.3229	85.7530	89.1831	92.6132	96.0434	99.4735
768	.3180	.0330	.7481	.4632	.1782	.8933	.6084	.3235	.7536	.1837	.6139	.0440	.4742
771	.3184	.0335	.7486	.4637	.1788	.8939	.6089	.3240	.7542	.1844	.6145	.0447	.4749
774	.3189	.0340	.7491	.4642	.1793	.8944	.6095	.3246	.7548	.1850	.6152	.0454	.4756
777	.3194	.0345	.7496	.4648	.1799	.8950	.6101	.3252	.7554	.1856	.6158	.0460	.4763
428780	70.3199	72.0350	73.7502	75.4653	77.1804	78.8955	80.6106	82.3258	85.7560	89.1862	92.6165	96.0467	99.4770
783	.3204	.0355	.7507	.4658	.1809	.8961	.6112	.3263	.7566	.1869	.6171	.0474	.4777
786	.3209	.0360	.7512	.4663	.1815	.8966	.6118	.3269	.7572	.1875	.6178	.0481	.4784
789	.3214	.0366	.7517	.4669	.1820	.8972	.6123	.3275	.7578	.1881	.6184	.0487	.4790
792	.3219	.0371	.7522	.4674	.1826	.8977	.6129	.3281	.7584	.1887	.6191	.0494	.4797
428795	70.3224	72.0376	73.7527	75.4679	77.1831	78.8983	80.6135	82.3286	85.7590	89.1894	92.6197	96.0501	99.4804
798	.3229	.0381	.7533	.4684	.1836	.8988	.6140	.3292	.7596	.1900	.6204	.0508	.4811
801	.3234	.0386	.7538	.4690	.1842	.8994	.6146	.3298	.7602	.1906	.6210	.0514	.4818
804	.3239	.0391	.7543	.4695	.1847	.8999	.6152	.3304	.7608	.1912	.6217	.0521	.4825
807	.3243	.0396	.7548	.4700	.1853	.9005	.6157	.3309	.7614	.1919	.6223	.0528	.4832
428810	70.3248	72.0401	73.7553	75.4706	77.1858	78.9010	80.6163	82.3315	85.7620	89.1925	92.6230	96.0534	99.4839
813	.3253	.0406	.7558	.4711	.1863	.9016	.6168	.3321	.7626	.1931	.6236	.0541	.4846
816	.3258	.0411	.7564	.4716	.1869	.9021	.6174	.3327	.7632	.1937	.6243	.0548	.4853
819	.3263	.0416	.7569	.4721	.1874	.9027	.6180	.3332	.7638	.1944	.6249	.0555	.4860
822	.3268	.0421	.7574	.4727	.1880	.9032	.6185	.3338	.7644	.1950	.6256	.0561	.4867
428825	70.3273	72.0426	73.7579	75.4732	77.1885	78.9038	80.6191	82.3344	85.7650	89.1956	92.6262	96.0568	99.4874
828	.3278	.0431	.7584	.4737	.1890	.9044	.6197	.3350	.7656	.1962	.6268	.0575	.4881
831	.3283	.0436	.7589	.4743	.1896	.9049	.6202	.3356	.7662	.1968	.6275	.0581	.4888
834	.3288	.0441	.7594	.4748	.1901	.9055	.6208	.3361	.7668	.1975	.6281	.0588	.4895
837	.3293	.0446	.7600	.4753	.1907	.9060	.6214	.3367	.7674	.1981	.6288	.0595	.4902
428840	70.3298	72.0451	73.7605	75.4758	77.1912	78.9066	80.6219	82.3373	85.7680	89.1987	92.6294	96.0602	99.4909
843	.3303	.0456	.7610	.4764	.1917	.9071	.6225	.3379	.7686	.1993	.6301	.0608	.4916
846	.3307	.0461	.7615	.4769	.1923	.9077	.6230	.3384	.7692	.2000	.6307	.0615	.4923
849	.3312	.0466	.7620	.4774	.1928	.9082	.6236	.3390	.7698	.2006	.6314	.0622	.4930
852	.3317	.0471	.7625	.4780	.1934	.9088	.6242	.3396	.7704	.2012	.6320	.0628	.4937
428855	70.3322	72.0476	73.7631	75.4785	77.1939	78.9093	80.6247	82.3402	85.7710	89.2018	92.6327	96.0635	99.4944
858	.3327	.0481	.7636	.4790	.1944	.9099	.6253	.3407	.7716	.2025	.6333	.0642	.4951
861	.3332	.0486	.7641	.4795	.1950	.9104	.6259	.3413	.7722	.2031	.6340	.0649	.4958
864	.3337	.0492	.7646	.4801	.1955	.9110	.6264	.3419	.7728	.2037	.6346	.0655	.4964
867	.3342	.0497	.7651	.4806	.1961	.9115	.6270	.3425	.7734	.2043	.6353	.0662	.4971
428870	70.3347	72.0502	73.7656	75.4811	77.1966	78.9121	80.6276	82.3430	85.7740	89.2050	92.6359	96.0669	99.4978
873	.3352	.0507	.7662	.4816	.1971	.9126	.6281	.3436	.7746	.2056	.6366	.0676	.4985
876	.3357	.0512	.7667	.4822	.1977	.9132	.6287	.3442	.7752	.2062	.6372	.0682	.4992
879	.3362	.0517	.7672	.4827	.1982	.9137	.6293	.3448	.7758	.2068	.6379	.0689	.4999
882	.3366	.0522	.7677	.4832	.1988	.9143	.6298	.3453	.7764	.2075	.6385	.0696	.5006
428885	70.3371	72.0527	73.7682	75.4838	77.1993	78.9148	80.6304	82.3459	85.7770	89.2081	92.6392	96.0702	99.5013
888	.3376	.0532	.7687	.4843	.1998	.9154	.6309	.3465	.7776	.2087	.6398	.0709	.5020
891	.3381	.0537	.7693	.4848	.2004	.9159	.6315	.3471	.7782	.2093	.6405	.0716	.5027
894	.3386	.0542	.7698	.4853	.2009	.9165	.6321	.3476	.7788	.2100	.6411	.0723	.5034
897	.3391	.0547	.7703	.4859	.2015	.9170	.6326	.3482	.7794	.2106	.6418	.0729	.5041
428900	70.3396	72.0552	73.7708	75.4864	77.2020	78.9176	80.6332	82.3488	85.7800	89.2112	92.6424	96.0736	99.5048

HARMONICS

BASIC FREQ.	112	116	120	124	128	132	136	140	144	148	152	156	160
428900	48.0368	49.7524	51.4680	53.1836	54.8992	56.6148	58.3304	60.0460	61.7616	63.4772	65.1928	66.9084	68.6240
903	.0371	.7527	.4684	.1840	.8996	.6152	.3308	.0464	.7620	.4776	.1933	.9089	.6245
906	.0375	.7531	.4687	.1843	.9000	.6156	.3312	.0468	.7625	.4781	.1937	.9093	.6250
909	.0378	.7534	.4691	.1847	.9004	.6160	.3316	.0473	.7629	.4785	.1942	.9098	.6254
912	.0381	.7538	.4694	.1851	.9007	.6164	.3320	.0477	.7633	.4790	.1946	.9103	.6259
428915	48.0385	49.7541	51.4698	53.1855	54.9011	56.6168	58.3324	60.0481	61.7638	63.4794	65.1951	66.9107	68.6264
918	.0388	.7545	.4702	.1858	.9015	.6172	.3328	.0485	.7642	.4799	.1955	.9112	.6269
921	.0392	.7548	.4705	.1862	.9019	.6176	.3333	.0489	.7646	.4803	.1960	.9117	.6274
924	.0395	.7552	.4709	.1866	.9023	.6180	.3337	.0494	.7651	.4808	.1964	.9121	.6278
927	.0398	.7555	.4712	.1869	.9027	.6184	.3341	.0498	.7655	.4812	.1969	.9126	.6283
428930	48.0402	49.7559	51.4716	53.1873	54.9030	56.6188	58.3345	60.0502	61.7659	63.4816	65.1974	66.9131	68.6288
933	.0405	.7562	.4720	.1877	.9034	.6192	.3349	.0506	.7664	.4821	.1978	.9135	.6293
936	.0408	.7566	.4723	.1881	.9038	.6196	.3353	.0510	.7668	.4825	.1983	.9140	.6298
939	.0412	.7569	.4727	.1884	.9042	.6199	.3357	.0515	.7672	.4830	.1987	.9145	.6302
942	.0415	.7573	.4730	.1888	.9046	.6203	.3361	.0519	.7676	.4834	.1992	.9150	.6307
428945	48.0418	49.7576	51.4734	53.1892	54.9050	56.6207	58.3365	60.0523	61.7681	63.4839	65.1996	66.9154	68.6312
948	.0422	.7580	.4738	.1896	.9053	.6211	.3369	.0527	.7685	.4843	.2001	.9159	.6317
951	.0425	.7583	.4741	.1899	.9057	.6215	.3373	.0531	.7689	.4847	.2006	.9164	.6322
954	.0428	.7587	.4745	.1903	.9061	.6219	.3377	.0536	.7694	.4852	.2010	.9168	.6326
957	.0432	.7590	.4748	.1907	.9065	.6223	.3382	.0540	.7698	.4856	.2015	.9173	.6331
428960	48.0435	49.7594	51.4752	53.1910	54.9069	56.6227	58.3386	60.0544	61.7702	63.4861	65.2019	66.9178	68.6336
963	.0439	.7597	.4756	.1914	.9073	.6231	.3390	.0548	.7707	.4865	.2024	.9182	.6341
966	.0442	.7601	.4759	.1918	.9076	.6235	.3394	.0552	.7711	.4870	.2028	.9187	.6346
969	.0445	.7604	.4763	.1922	.9080	.6239	.3398	.0557	.7715	.4874	.2033	.9192	.6350
972	.0449	.7608	.4766	.1925	.9084	.6243	.3402	.0561	.7720	.4879	.2037	.9196	.6355
428975	48.0452	49.7611	51.4770	53.1929	54.9088	56.6247	58.3406	60.0565	61.7724	63.4883	65.2042	66.9201	68.6360
978	.0455	.7614	.4774	.1933	.9092	.6251	.3410	.0569	.7728	.4887	.2047	.9206	.6365
981	.0459	.7618	.4777	.1936	.9096	.6255	.3414	.0573	.7733	.4892	.2051	.9210	.6370
984	.0462	.7621	.4781	.1940	.9100	.6259	.3418	.0578	.7737	.4896	.2056	.9215	.6374
987	.0465	.7625	.4784	.1944	.9103	.6263	.3422	.0582	.7741	.4901	.2060	.9220	.6379
428990	48.0469	49.7628	51.4788	53.1948	54.9107	56.6267	58.3426	60.0586	61.7746	63.4905	65.2065	66.9224	68.6384
993	.0472	.7632	.4792	.1951	.9111	.6271	.3430	.0590	.7750	.4910	.2069	.9229	.6389
996	.0476	.7635	.4795	.1955	.9115	.6275	.3435	.0594	.7754	.4914	.2074	.9234	.6394
999	.0479	.7639	.4799	.1959	.9119	.6279	.3439	.0599	.7759	.4919	.2078	.9238	.6398
429002	.0482	.7642	.4802	.1962	.9123	.6283	.3443	.0603	.7763	.4923	.2083	.9243	.6403
429005	48.0486	49.7646	51.4806	53.1966	54.9126	56.6287	58.3447	60.0607	61.7767	63.4927	65.2088	66.9248	68.6408
008	.0489	.7649	.4810	.1970	.9130	.6291	.3451	.0611	.7772	.4932	.2092	.9252	.6413
011	.0492	.7653	.4813	.1974	.9134	.6295	.3455	.0615	.7776	.4936	.2097	.9257	.6418
014	.0496	.7656	.4817	.1977	.9138	.6298	.3459	.0620	.7780	.4941	.2101	.9262	.6422
017	.0499	.7660	.4820	.1981	.9142	.6302	.3463	.0624	.7784	.4945	.2106	.9267	.6427
429020	48.0502	49.7663	51.4824	53.1985	54.9146	56.6306	58.3467	60.0628	61.7789	63.4950	65.2110	66.9271	68.6432
023	.0506	.7667	.4828	.1989	.9149	.6310	.3471	.0632	.7793	.4954	.2115	.9276	.6437
026	.0509	.7670	.4831	.1992	.9153	.6314	.3475	.0636	.7797	.4958	.2120	.9281	.6442
029	.0512	.7674	.4835	.1996	.9157	.6318	.3479	.0641	.7802	.4963	.2124	.9285	.6446
032	.0516	.7677	.4838	.2000	.9161	.6322	.3484	.0645	.7806	.4967	.2129	.9290	.6451
429035	48.0519	49.7681	51.4842	53.2003	54.9165	56.6326	58.3488	60.0649	61.7810	63.4972	65.2133	66.9295	68.6456
038	.0523	.7684	.4846	.2007	.9169	.6330	.3492	.0653	.7815	.4976	.2138	.9299	.6461
041	.0526	.7688	.4849	.2011	.9172	.6334	.3496	.0657	.7819	.4981	.2142	.9304	.6466
044	.0529	.7691	.4853	.2015	.9176	.6338	.3500	.0662	.7823	.4985	.2147	.9309	.6470
047	.0533	.7695	.4856	.2018	.9180	.6342	.3504	.0666	.7828	.4990	.2151	.9313	.6475
429050	48.0536	49.7698	51.4860	53.2022	54.9184	56.6346	58.3508	60.0670	61.7832	63.4994	65.2156	66.9318	68.6480
053	.0539	.7701	.4864	.2026	.9188	.6350	.3512	.0674	.7836	.4998	.2161	.9323	.6485
056	.0543	.7705	.4867	.2029	.9192	.6354	.3516	.0678	.7841	.5003	.2165	.9327	.6490
059	.0546	.7708	.4871	.2033	.9196	.6358	.3520	.0683	.7845	.5007	.2170	.9332	.6494
062	.0549	.7712	.4874	.2037	.9199	.6362	.3524	.0687	.7849	.5012	.2174	.9337	.6499
429065	48.0553	49.7715	51.4878	53.2041	54.9203	56.6366	58.3528	60.0691	61.7854	63.5016	65.2179	66.9341	68.6504
068	.0556	.7719	.4882	.2044	.9207	.6370	.3532	.0695	.7858	.5021	.2183	.9346	.6509
071	.0560	.7722	.4885	.2048	.9211	.6374	.3537	.0699	.7862	.5025	.2188	.9351	.6514
074	.0563	.7726	.4889	.2052	.9215	.6378	.3541	.0704	.7867	.5030	.2192	.9355	.6518
077	.0566	.7729	.4892	.2055	.9219	.6382	.3545	.0708	.7871	.5034	.2197	.9360	.6523
429080	48.0570	49.7733	51.4896	53.2059	54.9222	56.6386	58.3549	60.0712	61.7875	63.5038	65.2202	66.9365	68.6528
083	.0573	.7736	.4900	.2063	.9226	.6390	.3553	.0716	.7880	.5043	.2206	.9369	.6533
086	.0576	.7740	.4903	.2067	.9230	.6394	.3557	.0720	.7884	.5047	.2211	.9374	.6538
089	.0580	.7743	.4907	.2070	.9234	.6397	.3561	.0725	.7888	.5052	.2215	.9379	.6542
092	.0583	.7747	.4910	.2074	.9238	.6401	.3565	.0729	.7892	.5056	.2220	.9384	.6547
429095	48.0586	49.7750	51.4914	53.2078	54.9242	56.6405	58.3569	60.0733	61.7897	63.5061	65.2224	66.9388	68.6552
098	.0590	.7754	.4918	.2082	.9245	.6409	.3573	.0737	.7901	.5065	.2229	.9393	.6557
101	.0593	.7757	.4921	.2085	.9249	.6413	.3577	.0741	.7905	.5069	.2234	.9398	.6562
104	.0596	.7761	.4925	.2089	.9253	.6417	.3581	.0746	.7910	.5074	.2238	.9402	.6566
107	.0600	.7764	.4928	.2093	.9257	.6421	.3586	.0750	.7914	.5078	.2243	.9407	.6571
429110	48.0603	49.7768	51.4932	53.2096	54.9261	56.6425	58.3590	60.0754	61.7918	63.5083	65.2247	66.9412	68.6576
113	.0607	.7771	.4936	.2100	.9265	.6429	.3594	.0758	.7923	.5087	.2252	.9416	.6581
116	.0610	.7775	.4939	.2104	.9268	.6433	.3598	.0762	.7927	.5092	.2256	.9421	.6586
119	.0613	.7778	.4943	.2108	.9272	.6437	.3602	.0767	.7931	.5096	.2261	.9426	.6590
122	.0617	.7782	.4946	.2111	.9276	.6441	.3606	.0771	.7936	.5101	.2265	.9430	.6595
429125	48.0620	49.7785	51.4950	53.2115	54.9280	56.6445	58.3610	60.0775	61.7940	63.5105	65.2270	66.9435	68.6600
128	.0623	.7788	.4954	.2119	.9284	.6449	.3614	.0779	.7944	.5109	.2275	.9440	.6605
131	.0627	.7792	.4957	.2122	.9288	.6453	.3618	.0783	.7949	.5114	.2279	.9444	.6610
134	.0630	.7795	.4961	.2126	.9292	.6457	.3622	.0788	.7953	.5118	.2284	.9449	.6614
137	.0633	.7799	.4964	.2130	.9295	.6461	.3626	.0792	.7957	.5123	.2288	.9454	.6619
429140	48.0637	49.7802	51.4968	53.2134	54.9299	56.6465	58.3630	60.0796	61.7962	63.5127	65.2293	66.9458	68.6624
143	.0640	.7806	.4972	.2137	.9303	.6469	.3634	.0800	.7966	.5132	.2297	.9463	.6629
146	.0644	.7809	.4975	.2141	.9307	.6473	.3639	.0804	.7970	.5136	.2302	.9468	.6634
149	.0647	.7813	.4979	.2145	.9311	.6477	.3643	.0809	.7975	.5141	.2306	.9472	.6638
152	.0650	.7816	.4982	.2148	.9315	.6481	.3647	.0813	.7979	.5145	.2311	.9477	.6643
429155	48.0654	49.7820	51.4986	53.2152	54.9318	56.6485	58.3651	60.0817	61.7983	63.5149	65.2316	66.9482	68.6648
158	.0657	.7823	.4990	.2156	.9322	.6489	.3655	.0821	.7988	.5154	.2320	.9486	.6653
161	.0660	.7827	.4993	.2160	.9326	.6493	.3659	.0825	.7992	.5158	.2325	.9491	.6658
164	.0664	.7830	.4997	.2163	.9330	.6496	.3663	.0830	.7996	.5163	.2329	.9496	.6662
167	.0667	.7834	.5000	.2167	.9334	.6500	.3667	.0834	.8000	.5167	.2334	.9501	.6667
429170	48.0670	49.7837	51.5004	53.2171	54.9338	56.6504	58.3671	60.0838	61.8005	63.5172	65.2338	66.9505	68.6672
173	.0674	.7841	.5008	.2175	.9341	.6508	.3675	.0842	.8009	.5176	.2343	.9510	.6677
176	.0677	.7844	.5011	.2178	.9345	.6512	.3679	.0846	.8013	.5180	.2348	.9515	.6682
179	.0680	.7848	.5015	.2182	.9349	.6516	.3683	.0851	.8018	.5185	.2352	.9519	.6686
182	.0684	.7851	.5018	.2186	.9353	.6520	.3688	.0855	.8022	.5189	.2357	.9524	.6691
429185	48.0687	49.7855	51.5022	53.2189	54.9357	56.6524	58.3692	60.0859	61.8026	63.5194	65.2361	66.9529	68.6696
188	.0691	.7858	.5026	.2193	.9361	.6528	.3696	.0863	.8031	.5198	.2366	.9533	.6701
191	.0694	.7862	.5029	.2197	.9364	.6532	.3700	.0867	.8035	.5203	.2370	.9538	.6706
194	.0697	.7865	.5033	.2201	.9368	.6536	.3704	.0872	.8039	.5207	.2375	.9543	.6710
197	.0701	.7869	.5036	.2204	.9372	.6540	.3708	.0876	.8044	.5212	.2379	.9547	.6715
429200	48.0704	49.7872	51.5040	53.2208	54.9376	56.6544	58.3712	60.0880	61.8048	63.5216	65.2384	66.9552	68.6720

MEGACYCLES PER SECOND

H A R M O N I C S

BASIC FREQ.	164	168	172	176	180	184	188	192	200	208	216	224	232
428900	70.3396	72.0552	73.7708	75.4864	77.2020	78.9176	80.6332	82.3488	85.7800	89.2112	92.6424	96.0736	99.5048
903	.3401	.0557	.7713	.4869	.2025	.9182	.6338	.3494	.7806	.2118	.6430	.0743	.5055
906	.3406	.0562	.7718	.4875	.2031	.9187	.6343	.3500	.7812	.2124	.6437	.0749	.5062
909	.3411	.0567	.7723	.4880	.2036	.9193	.6349	.3505	.7818	.2131	.6443	.0756	.5069
912	.3416	.0572	.7729	.4885	.2042	.9198	.6355	.3511	.7824	.2137	.6450	.0763	.5076
428915	70.3421	72.0577	73.7734	75.4890	77.2047	78.9204	80.6360	82.3517	85.7830	89.2143	92.6456	96.0770	99.5083
918	.3426	.0582	.7739	.4896	.2052	.9209	.6366	.3523	.7836	.2149	.6463	.0776	.5090
921	.3430	.0587	.7744	.4901	.2058	.9215	.6371	.3528	.7842	.2156	.6469	.0783	.5097
924	.3435	.0592	.7749	.4906	.2063	.9220	.6377	.3534	.7848	.2162	.6476	.0790	.5104
927	.3440	.0597	.7754	.4912	.2069	.9226	.6383	.3540	.7854	.2168	.6482	.0796	.5111
428930	70.3445	72.0602	73.7760	75.4917	77.2074	78.9231	80.6388	82.3546	85.7860	89.2174	92.6489	96.0803	99.5118
933	.3450	.0607	.7765	.4922	.2079	.9237	.6394	.3551	.7866	.2181	.6495	.0810	.5125
936	.3455	.0612	.7770	.4927	.2085	.9242	.6400	.3557	.7872	.2187	.6502	.0817	.5132
939	.3460	.0618	.7775	.4933	.2090	.9248	.6405	.3563	.7878	.2193	.6508	.0823	.5138
942	.3465	.0623	.7780	.4938	.2096	.9253	.6411	.3569	.7884	.2199	.6515	.0830	.5145
428945	70.3470	72.0628	73.7785	75.4943	77.2101	78.9259	80.6417	82.3574	85.7890	89.2206	92.6521	96.0837	99.5152
948	.3475	.0633	.7791	.4948	.2106	.9264	.6422	.3580	.7896	.2212	.6528	.0844	.5159
951	.3480	.0638	.7796	.4954	.2112	.9270	.6428	.3586	.7902	.2218	.6534	.0850	.5166
954	.3485	.0643	.7801	.4959	.2117	.9275	.6434	.3592	.7908	.2224	.6541	.0857	.5173
957	.3489	.0648	.7806	.4964	.2123	.9281	.6439	.3597	.7914	.2231	.6547	.0864	.5180
428960	70.3494	72.0653	73.7811	75.4970	77.2128	78.9286	80.6445	82.3603	85.7920	89.2237	92.6554	96.0870	99.5187
963	.3499	.0658	.7816	.4975	.2133	.9292	.6450	.3609	.7926	.2243	.6560	.0877	.5194
966	.3504	.0663	.7822	.4980	.2139	.9297	.6456	.3615	.7932	.2249	.6567	.0884	.5201
969	.3509	.0668	.7827	.4985	.2144	.9303	.6462	.3620	.7938	.2256	.6573	.0891	.5208
972	.3514	.0673	.7832	.4991	.2150	.9308	.6467	.3626	.7944	.2262	.6580	.0897	.5215
428975	70.3519	72.0678	73.7837	75.4996	77.2155	78.9314	80.6473	82.3632	85.7950	89.2268	92.6586	96.0904	99.5222
978	.3524	.0683	.7842	.5001	.2160	.9320	.6479	.3638	.7956	.2274	.6592	.0911	.5229
981	.3529	.0688	.7847	.5007	.2166	.9325	.6484	.3644	.7962	.2280	.6599	.0917	.5236
984	.3534	.0693	.7852	.5012	.2171	.9331	.6490	.3649	.7968	.2287	.6605	.0924	.5243
987	.3539	.0698	.7858	.5017	.2177	.9336	.6496	.3655	.7974	.2293	.6612	.0931	.5250
428990	70.3544	72.0703	73.7863	75.5022	77.2182	78.9342	80.6501	82.3661	85.7980	89.2299	92.6618	96.0938	99.5257
993	.3549	.0708	.7868	.5028	.2187	.9347	.6507	.3667	.7986	.2305	.6625	.0944	.5264
996	.3553	.0713	.7873	.5033	.2193	.9353	.6512	.3672	.7992	.2312	.6631	.0951	.5271
999	.3558	.0718	.7878	.5038	.2198	.9358	.6518	.3678	.7998	.2318	.6638	.0958	.5278
429002	.3563	.0723	.7883	.5044	.2204	.9364	.6524	.3684	.8004	.2324	.6644	.0964	.5285
429005	70.3568	72.0728	73.7889	75.5049	77.2209	78.9369	80.6529	82.3690	85.8010	89.2330	92.6651	96.0971	99.5292
008	.3573	.0733	.7894	.5054	.2214	.9375	.6535	.3695	.8016	.2337	.6657	.0978	.5299
011	.3578	.0738	.7899	.5059	.2220	.9380	.6541	.3701	.8022	.2343	.6664	.0985	.5306
014	.3583	.0744	.7904	.5065	.2225	.9386	.6546	.3707	.8028	.2349	.6670	.0991	.5312
017	.3588	.0749	.7909	.5070	.2231	.9391	.6552	.3713	.8034	.2355	.6677	.0998	.5319
429020	70.3593	72.0754	73.7914	75.5075	77.2236	78.9397	80.6558	82.3718	85.8040	89.2362	92.6683	96.1005	99.5326
023	.3598	.0759	.7920	.5080	.2241	.9402	.6563	.3724	.8046	.2368	.6690	.1012	.5333
026	.3603	.0764	.7925	.5086	.2247	.9408	.6569	.3730	.8052	.2374	.6696	.1018	.5340
029	.3608	.0769	.7930	.5091	.2252	.9413	.6575	.3736	.8058	.2380	.6703	.1025	.5347
032	.3612	.0774	.7935	.5096	.2258	.9419	.6580	.3741	.8064	.2387	.6709	.1032	.5354
429035	70.3617	72.0779	73.7940	75.5102	77.2263	78.9424	80.6586	82.3747	85.8070	89.2393	92.6716	96.1038	99.5361
038	.3622	.0784	.7945	.5107	.2268	.9430	.6591	.3753	.8076	.2399	.6722	.1045	.5368
041	.3627	.0789	.7951	.5112	.2274	.9435	.6597	.3759	.8082	.2405	.6729	.1052	.5375
044	.3632	.0794	.7956	.5117	.2279	.9441	.6603	.3764	.8088	.2412	.6735	.1059	.5382
047	.3637	.0799	.7961	.5123	.2285	.9446	.6608	.3770	.8094	.2418	.6742	.1065	.5389
429050	70.3642	72.0804	73.7966	75.5128	77.2290	78.9452	80.6614	82.3776	85.8100	89.2424	92.6748	96.1072	99.5396
053	.3647	.0809	.7971	.5133	.2295	.9458	.6620	.3782	.8106	.2430	.6754	.1079	.5403
056	.3652	.0814	.7976	.5139	.2301	.9463	.6625	.3788	.8112	.2436	.6761	.1085	.5410
059	.3657	.0819	.7981	.5144	.2306	.9469	.6631	.3793	.8118	.2443	.6767	.1092	.5417
062	.3662	.0824	.7987	.5149	.2312	.9474	.6637	.3799	.8124	.2449	.6774	.1099	.5424
429065	70.3667	72.0829	73.7992	75.5154	77.2317	78.9480	80.6642	82.3805	85.8130	89.2455	92.6780	96.1106	99.5431
068	.3672	.0834	.7997	.5160	.2322	.9485	.6648	.3811	.8136	.2461	.6787	.1112	.5438
071	.3676	.0839	.8002	.5165	.2328	.9491	.6653	.3816	.8142	.2468	.6793	.1119	.5445
074	.3681	.0844	.8007	.5170	.2333	.9496	.6659	.3822	.8148	.2474	.6800	.1126	.5452
077	.3686	.0849	.8012	.5176	.2339	.9502	.6665	.3828	.8154	.2480	.6806	.1132	.5459
429080	70.3691	72.0854	73.8018	75.5181	77.2344	78.9507	80.6670	82.3834	85.8160	89.2486	92.6813	96.1139	99.5466
083	.3696	.0859	.8023	.5186	.2349	.9513	.6676	.3839	.8166	.2493	.6819	.1146	.5473
086	.3701	.0864	.8028	.5191	.2355	.9518	.6682	.3845	.8172	.2499	.6826	.1153	.5480
089	.3706	.0870	.8033	.5197	.2360	.9524	.6687	.3851	.8178	.2505	.6832	.1159	.5486
092	.3711	.0875	.8038	.5202	.2366	.9529	.6693	.3857	.8184	.2511	.6839	.1166	.5493
429095	70.3716	72.0880	73.8043	75.5207	77.2371	78.9535	80.6699	82.3862	85.8190	89.2518	92.6845	96.1173	99.5500
098	.3721	.0885	.8049	.5212	.2376	.9540	.6704	.3868	.8196	.2524	.6852	.1180	.5507
101	.3726	.0890	.8054	.5218	.2382	.9546	.6710	.3874	.8202	.2530	.6858	.1186	.5514
104	.3731	.0895	.8059	.5223	.2387	.9551	.6716	.3880	.8208	.2536	.6865	.1193	.5521
107	.3735	.0900	.8064	.5228	.2393	.9557	.6721	.3885	.8214	.2543	.6871	.1200	.5528
429110	70.3740	72.0905	73.8069	75.5234	77.2398	78.9562	80.6727	82.3891	85.8220	89.2549	92.6878	96.1206	99.5535
113	.3745	.0910	.8074	.5239	.2403	.9568	.6732	.3897	.8226	.2555	.6884	.1213	.5542
116	.3750	.0915	.8080	.5244	.2409	.9573	.6738	.3903	.8232	.2561	.6891	.1220	.5549
119	.3755	.0920	.8085	.5249	.2414	.9579	.6744	.3908	.8238	.2568	.6897	.1227	.5556
122	.3760	.0925	.8090	.5255	.2420	.9584	.6749	.3914	.8244	.2574	.6904	.1233	.5563
429125	70.3765	72.0930	73.8095	75.5260	77.2425	78.9590	80.6755	82.3920	85.8250	89.2580	92.6910	96.1240	99.5570
128	.3770	.0935	.8100	.5265	.2430	.9596	.6761	.3926	.8256	.2586	.6916	.1247	.5577
131	.3775	.0940	.8105	.5271	.2436	.9601	.6766	.3932	.8262	.2592	.6923	.1253	.5584
134	.3780	.0945	.8110	.5276	.2441	.9607	.6772	.3937	.8268	.2599	.6929	.1260	.5591
137	.3785	.0950	.8116	.5281	.2447	.9612	.6778	.3943	.8274	.2605	.6936	.1267	.5598
429140	70.3790	72.0955	73.8121	75.5286	77.2452	78.9618	80.6783	82.3949	85.8280	89.2611	92.6942	96.1274	99.5605
143	.3795	.0960	.8126	.5292	.2457	.9623	.6789	.3955	.8286	.2617	.6949	.1280	.5612
146	.3799	.0965	.8131	.5297	.2463	.9629	.6794	.3960	.8292	.2624	.6955	.1287	.5619
149	.3804	.0970	.8136	.5302	.2468	.9634	.6800	.3966	.8298	.2630	.6962	.1294	.5626
152	.3809	.0975	.8141	.5308	.2474	.9640	.6806	.3972	.8304	.2636	.6968	.1300	.5633
429155	70.3814	72.0980	73.8147	75.5313	77.2479	78.9645	80.6811	82.3978	85.8310	89.2642	92.6975	96.1307	99.5640
158	.3819	.0985	.8152	.5318	.2484	.9651	.6817	.3983	.8316	.2649	.6981	.1314	.5647
161	.3824	.0990	.8157	.5323	.2490	.9656	.6823	.3989	.8322	.2655	.6988	.1321	.5654
164	.3829	.0996	.8162	.5329	.2495	.9662	.6828	.3995	.8328	.2661	.6994	.1327	.5660
167	.3834	.1001	.8167	.5334	.2501	.9667	.6834	.4001	.8334	.2667	.7001	.1334	.5667
429170	70.3839	72.1006	73.8172	75.5339	77.2506	78.9673	80.6840	82.4006	85.8340	89.2674	92.7007	96.1341	99.5674
173	.3844	.1011	.8178	.5344	.2511	.9678	.6845	.4012	.8346	.2680	.7014	.1348	.5681
176	.3849	.1016	.8183	.5350	.2517	.9684	.6851	.4018	.8352	.2686	.7020	.1354	.5688
179	.3854	.1021	.8188	.5355	.2522	.9689	.6857	.4024	.8358	.2692	.7027	.1361	.5695
182	.3858	.1026	.8193	.5360	.2528	.9695	.6862	.4029	.8364	.2699	.7033	.1368	.5702
429185	70.3863	72.1031	73.8198	75.5366	77.2533	78.9700	80.6868	82.4035	85.8370	89.2705	92.7040	96.1374	99.5709
188	.3868	.1036	.8203	.5371	.2538	.9706	.6873	.4041	.8376	.2711	.7046	.1381	.5716
191	.3873	.1041	.8209	.5376	.2544	.9711	.6879	.4047	.8382	.2717	.7053	.1388	.5723
194	.3878	.1046	.8214	.5381	.2549	.9717	.6885	.4052	.8388	.2724	.7059	.1395	.5730
197	.3883	.1051	.8219	.5387	.2555	.9722	.6890	.4058	.8394	.2730	.7066	.1401	.5737
429200	70.3888	72.1056	73.8224	75.5392	77.2560	78.9728	80.6896	82.4064	85.8400	89.2736	92.7072	96.1408	99.5744

H A R M O N I C S

BASIC FREQ.	112	116	120	124	128	132	136	140	144	148	152	156	160
429200	48.0704	49.7872	51.5040	53.2208	54.9376	56.6544	58.3712	60.0880	61.8048	63.5216	65.2384	66.9552	68.6720
203	.0707	.7875	.5044	.2212	.9380	.6548	.3716	.0884	.8052	.5220	.2389	.9557	.6725
206	.0711	.7879	.5047	.2215	.9384	.6552	.3720	.0888	.8057	.5225	.2393	.9561	.6730
209	.0714	.7882	.5051	.2219	.9388	.6556	.3724	.0893	.8061	.5229	.2398	.9566	.6734
212	.0717	.7886	.5054	.2223	.9391	.6560	.3728	.0897	.8065	.5234	.2402	.9571	6739
429215	48.0721	49.7889	51.5058	53.2227	54.9395	56.6564	58.3732	60.0901	61.8070	63.5238	65.2407	66.9575	68.6744
218	.0724	.7893	.5062	.2230	.9399	.6568	.3736	.0905	.8074	.5243	.2411	.9580	.6749
221	.0728	.7896	.5065	.2234	.9403	.6572	.3741	.0909	.8078	.5247	.2416	.9585	.6754
224	.0731	.7900	.5069	.2238	.9407	.6576	.3745	.0914	.8083	.5252	.2420	.9589	.6758
227	.0734	.7903	.5072	.2241	.9411	.6580	.3749	.0918	.8087	.5256	.2425	.9594	.6763
429230	48.0738	49.7907	51.5076	53.2245	54.9414	56.6584	58.3753	60.0922	61.8091	63.5260	65.2430	66.9599	68.6768
233	.0741	.7910	.5080	.2249	.9418	.6588	.3757	.0926	.8096	.5265	.2434	.9603	.6773
236	.0744	.7914	.5083	.2253	.9422	.6592	.3761	.0930	.8100	.5269	.2439	.9608	.6778
239	.0748	.7917	.5087	.2256	.9426	.6595	.3765	.0935	.8104	.5274	.2443	.9613	.6782
242	.0751	.7921	.5090	.2260	.9430	.6599	.3769	.0939	.8108	.5278	.2448	.9618	.6787
429245	48.0754	49.7924	51.5094	53.2264	54.9434	56.6603	58.3773	60.0943	61.8113	63.5283	65.2452	66.9622	68.6792
248	.0758	.7928	.5098	.2268	.9437	.6607	.3777	.0947	.8117	.5287	.2457	.9627	.6797
251	.0761	.7931	.5101	.2271	.9441	.6611	.3781	.0951	.8121	.5291	.2462	.9632	.6802
254	.0764	.7935	.5105	.2275	.9445	.6615	.3785	.0956	.8126	.5296	.2466	.9636	.6806
257	.0768	.7938	.5108	.2279	.9449	.6619	.3790	.0960	.8130	.5300	.2471	.9641	.6811
429260	48.0771	49.7942	51.5112	53.2282	54.9453	56.6623	58.3794	60.0964	61.8134	63.5305	65.2475	66.9646	68.6816
263	.0775	.7945	.5116	.2286	.9457	.6627	.3798	.0968	.8139	.5309	.2480	.9650	.6821
266	.0778	.7949	.5119	.2290	.9460	.6631	.3802	.0972	.8143	.5314	.2484	.9655	.6826
269	.0781	.7952	.5123	.2294	.9464	.6635	.3806	.0977	.8147	.5318	.2489	.9660	.6830
272	.0785	.7956	.5126	.2297	.9468	.6639	.3810	.0981	.8152	.5323	.2493	.9664	.6835
429275	48.0788	49.7959	51.5130	53.2301	54.9472	56.6643	58.3814	60.0985	61.8156	63.5327	65.2498	66.9669	68.6840
278	.0791	.7962	.5134	.2305	.9476	.6647	.3818	.0989	.8160	.5331	.2503	.9674	.6845
281	.0795	.7966	.5137	.2308	.9480	.6651	.3822	.0993	.8165	.5336	.2507	.9678	.6850
284	.0798	.7969	.5141	.2312	.9484	.6655	.3826	.0998	.8169	.5340	.2512	.9683	.6854
287	.0801	.7973	.5144	.2316	.9487	.6659	.3830	.1002	.8173	.5345	.2516	.9688	.6859
429290	48.0805	49.7976	51.5148	53.2320	54.9491	56.6663	58.3834	60.1006	61.8178	63.5349	65.2521	66.9692	68.6864
293	.0808	.7980	.5152	.2323	.9495	.6667	.3838	.1010	.8182	.5354	.2525	.9697	.6869
296	.0812	.7983	.5155	.2327	.9499	.6671	.3843	.1014	.8186	.5358	.2530	.9702	.6874
299	.0815	.7987	.5159	.2331	.9503	.6675	.3847	.1019	.8191	.5363	.2534	.9706	.6878
302	.0818	.7990	.5162	.2334	.9507	.6679	.3851	.1023	.8195	.5367	.2539	.9711	.6883
429305	48.0822	49.7994	51.5166	53.2338	54.9510	56.6683	58.3855	60.1027	61.8199	63.5371	65.2544	66.9716	68.6888
308	.0825	.7997	.5170	.2342	.9514	.6687	.3859	.1031	.8204	.5376	.2548	.9720	.6893
311	.0828	.8001	.5173	.2346	.9518	.6691	.3863	.1035	.8208	.5380	.2553	.9725	.6898
314	.0832	.8004	.5177	.2349	.9522	.6694	.3867	.1040	.8212	.5385	.2557	.9730	.6902
317	.0835	.8008	.5180	.2353	.9526	.6698	.3871	.1044	.8216	.5389	.2562	.9735	.6907
429320	48.0838	49.8011	51.5184	53.2357	54.9530	56.6702	58.3875	60.1048	61.8221	63.5394	65.2566	66.9739	68.6912
323	.0842	.8015	.5188	.2361	.9533	.6706	.3879	.1052	.8225	.5398	.2571	.9744	.6917
326	.0845	.8018	.5191	.2364	.9537	.6710	.3883	.1056	.8229	.5402	.2576	.9749	.6922
329	.0848	.8022	.5195	.2368	.9541	.6714	.3887	.1061	.8234	.5407	.2580	.9753	.6926
332	.0852	.8025	.5198	.2372	.9545	.6718	.3892	.1065	.8238	.5411	.2585	.9758	.6931
429335	48.0855	49.8029	51.5202	53.2375	54.9549	56.6722	58.3896	60.1069	61.8242	63.5416	65.2589	66.9763	68.6936
338	.0859	.8032	.5206	.2379	.9553	.6726	.3900	.1073	.8247	.5420	.2594	.9767	.6941
341	.0862	.8036	.5209	.2383	.9556	.6730	.3904	.1077	.8251	.5425	.2598	.9772	.6946
344	.0865	.8039	.5213	.2387	.9560	.6734	.3908	.1082	.8255	.5429	.2603	.9777	.6950
347	.0869	.8043	.5216	.2390	.9564	.6738	.3912	.1086	.8260	.5434	.2607	.9781	.6955
429350	48.0872	49.8046	51.5220	53.2394	54.9568	56.6742	58.3916	60.1090	61.8264	63.5438	65.2612	66.9786	68.6960
353	.0875	.8049	.5224	.2398	.9572	.6746	.3920	.1094	.8268	.5442	.2617	.9791	.6965
356	.0879	.8053	.5227	.2401	.9576	.6750	.3924	.1098	.8273	.5447	.2621	.9795	.6970
359	.0882	.8056	.5231	.2405	.9580	.6754	.3928	.1103	.8277	.5451	.2626	.9800	.6974
362	.0885	.8060	.5234	.2409	.9583	.6758	.3932	.1107	.8281	.5456	.2630	.9805	.6979
429365	48.0889	49.8063	51.5238	53.2413	54.9587	56.6762	58.3936	60.1111	61.8286	63.5460	65.2635	66.9809	68.6984
368	.0892	.8067	.5242	.2416	.9591	.6766	.3940	.1115	.8290	.5465	.2639	.9814	.6989
371	.0896	.8070	.5245	.2420	.9595	.6770	.3945	.1119	.8294	.5469	.2644	.9819	.6994
374	.0899	.8074	.5249	.2424	.9599	.6774	.3949	.1124	.8299	.5474	.2648	.9823	.6998
377	.0902	.8077	.5252	.2427	.9603	.6778	.3953	.1128	.8303	.5478	.2653	.9828	.7003
429380	48.0906	49.8081	51.5256	53.2431	54.9606	56.6782	58.3957	60.1132	61.8307	63.5482	65.2658	66.9833	68.7008
383	.0909	.8084	.5260	.2435	.9610	.6786	.3961	.1136	.8312	.5487	.2662	.9837	.7013
386	.0912	.8088	.5263	.2439	.9614	.6790	.3965	.1140	.8316	.5491	.2667	.9842	.7018
389	.0916	.8091	.5267	.2442	.9618	.6793	.3969	.1145	.8320	.5496	.2671	.9847	.7022
392	.0919	.8095	.5270	.2446	.9622	.6797	.3973	.1149	.8324	.5500	.2676	.9852	.7027
429395	48.0922	49.8098	51.5274	53.2450	54.9626	56.6801	58.3977	60.1153	61.8329	63.5505	65.2680	66.9856	68.7032
398	.0926	.8102	.5278	.2454	.9629	.6805	.3981	.1157	.8333	.5509	.2685	.9861	.7037
401	.0929	.8105	.5281	.2457	.9633	.6809	.3985	.1161	.8337	.5513	.2690	.9866	.7042
404	.0932	.8109	.5285	.2461	.9637	.6813	.3989	.1166	.8342	.5518	.2694	.9870	.7046
407	.0936	.8112	.5288	.2465	.9641	.6817	.3994	.1170	.8346	.5522	.2699	.9875	.7051
429410	48.0939	49.8116	51.5292	53.2468	54.9645	56.6821	58.3998	60.1174	61.8350	63.5527	65.2703	66.9880	68.7056
413	.0943	.8119	.5296	.2472	.9649	.6825	.4002	.1178	.8355	.5531	.2708	.9884	.7061
416	.0946	.8123	.5299	.2476	.9652	.6829	.4006	.1182	.8359	.5536	.2712	.9889	.7066
419	.0949	.8126	.5303	.2480	.9656	.6833	.4010	.1187	.8363	.5540	.2717	.9894	.7070
422	.0953	.8130	.5306	.2483	.9660	.6837	.4014	.1191	.8368	.5545	.2721	.9898	.7075
429425	48.0956	49.8133	51.5310	53.2487	54.9664	56.6841	58.4018	60.1195	61.8372	63.5549	65.2726	66.9903	68.7080
428	.0959	.8136	.5314	.2491	.9668	.6845	.4022	.1199	.8376	.5553	.2731	.9908	.7085
431	.0963	.8140	.5317	.2494	.9672	.6849	.4026	.1203	.8381	.5558	.2735	.9912	.7090
434	.0966	.8143	.5321	.2498	.9676	.6853	.4030	.1208	.8385	.5562	.2740	.9917	.7094
437	.0969	.8147	.5324	.2502	.9679	.6857	.4034	.1212	.8389	.5567	.2744	.9922	.7099
429440	48.0973	49.8150	51.5328	53.2506	54.9683	56.6861	58.4038	60.1216	61.8394	63.5571	65.2749	66.9926	68.7104
443	.0976	.8154	.5332	.2509	.9687	.6865	.4042	.1220	.8398	.5576	.2753	.9931	.7109
446	.0980	.8157	.5335	.2513	.9691	.6869	.4047	.1224	.8402	.5580	.2758	.9936	.7114
449	.0983	.8161	.5339	.2517	.9695	.6873	.4051	.1229	.8407	.5585	.2762	.9940	.7118
452	.0986	.8164	.5342	.2520	.9699	.6877	.4055	.1233	.8411	.5589	.2767	.9945	.7123
429455	48.0990	49.8168	51.5346	53.2524	54.9702	56.6881	58.4059	60.1237	61.8415	63.5593	65.2772	66.9950	68.7128
458	.0993	.8171	.5350	.2528	.9706	.6885	.4063	.1241	.8420	.5598	.2776	.9954	.7133
461	.0996	.8175	.5353	.2532	.9710	.6889	.4067	.1245	.8424	.5602	.2781	.9959	.7138
464	.1000	.8178	.5357	.2535	.9714	.6892	.4071	.1250	.8428	.5607	.2785	.9964	.7142
467	.1003	.8182	.5360	.2539	.9718	.6896	.4075	.1254	.8432	.5611	.2790	.9969	.7147
429470	48.1006	49.8185	51.5364	53.2543	54.9722	56.6900	58.4079	60.1258	61.8437	63.5616	65.2794	66.9973	68.7152
473	.1010	.8189	.5368	.2547	.9725	.6904	.4083	.1262	.8441	.5620	.2799	.9978	.7157
476	.1013	.8192	.5371	.2550	.9729	.6908	.4087	.1266	.8445	.5624	.2804	.9983	.7162
479	.1016	.8196	.5375	.2554	.9733	.6912	.4091	.1271	.8450	.5639	.2808	.9987	.7166
482	.1020	.8199	.5378	.2558	.9737	.6916	.4096	.1275	.8454	.5633	.2813	.9992	.7171
429485	48.1023	49.8203	51.5382	53.2561	54.9741	56.6920	58.4100	60.1279	61.8458	63.5638	65.2817	66.9997	68.7176
488	.1027	.8206	.5386	.2565	.9745	.6924	.4104	.1283	.8463	.5642	.2822	67.0001	.7181
491	.1030	.8210	.5389	.2569	.9748	.6928	.4108	.1287	.8467	.5647	.2826	.0006	.7186
494	.1033	.8213	.5393	.2573	.9752	.6932	.4112	.1292	.8471	.5651	.2831	.0011	.7190
497	.1037	.8217	.5396	.2576	.9756	.6936	.4116	.1296	.8476	.5656	.2835	.0015	.7195
429500	48.1040	49.8220	51.5400	53.2580	54.9760	56.6940	58.4120	60.1300	61.8480	63.5660	65.2840	67.0020	68.7200

MEGACYCLES PER SECOND

HARMONICS

BASIC FREQ.	164	168	172	176	180	184	188	192	200	208	216	224	232
429200	70.3888	72.1056	73.8224	75.5392	77.2560	78.9728	80.6896	82.4064	85.8400	89.2736	92.7072	96.1408	99.5744
203	.3893	.1061	.8229	.5397	.2565	.9734	.6902	.4070	.8406	.2742	.7078	.1415	.5751
206	.3898	.1066	.8234	.5403	.2571	.9739	.6907	.4076	.8412	.2748	.7085	.1421	.5758
209	.3903	.1071	.8239	.5408	.2576	.9745	.6913	.4081	.8418	.2755	.7091	.1428	.5765
212	.3908	.1076	.8245	.5413	.2582	.9750	.6919	.4087	.8424	.2761	.7098	.1435	.5772
429215	70.3913	72.1081	73.8250	75.5418	77.2587	78.9756	80.6924	82.4093	85.8430	89.2767	92.7104	96.1442	99.5779
218	.3918	.1086	.8255	.5424	.2592	.9761	.6930	.4099	.8436	.2773	.7111	.1448	.5786
221	.3922	.1091	.8260	.5429	.2598	.9767	.6935	.4104	.8442	.2780	.7117	.1455	.5793
224	.3927	.1096	.8265	.5434	.2603	.9772	.6941	.4110	.8448	.2786	.7124	.1462	.5800
227	.3932	.1101	.8270	.5440	.2609	.9778	.6947	.4116	.8454	.2792	.7130	.1468	.5807
429230	70.3937	72.1106	73.8276	75.5445	77.2614	78.9783	80.6952	82.4122	85.8460	89.2798	92.7137	96.1475	99.5814
233	.3942	.1111	.8281	.5450	.2619	.9789	.6958	.4127	.8466	.2805	.7143	.1482	.5821
236	.3947	.1116	.8286	.5455	.2625	.9794	.6964	.4133	.8472	.2811	.7150	.1589	.5828
239	.3952	.1122	.8291	.5461	.2630	.9800	.6969	.4139	.8478	.2817	.7156	.1495	.5834
242	.3957	.1127	.8296	.5466	.2636	.9805	.6975	.4145	.8484	.2823	.7163	.1502	.5841
429245	70.3962	72.1132	73.8301	75.5471	77.2641	78.9811	80.6981	82.4150	85.8490	89.2830	92.7169	96.1509	99.5848
248	.3967	.1137	.8307	.5476	.2646	.9816	.6986	.4156	.8496	.2836	.7176	.1516	.5855
251	.3972	.1142	.8312	.5482	.2652	.9822	.6992	.4162	.8502	.2842	.7182	.1522	.5862
254	.3977	.1147	.8317	.5487	.2657	.9827	.6998	:4168	.8508	.2848	.7189	.1529	.5869
257	.3981	.1152	.8322	.5492	.2663	.9833	.7003	.4173	.8514	.2855	.7195	.1536	.5876
429260	70.3986	72.1157	73.8327	75.5498	77.2668	78.9838	80.7009	82.4179	85.8520	89.2861	92.7202	96.1542	99.5883
263	.3991	.1162	.8332	.5503	.2673	.9844	.7014	.4185	.8526	.2867	.7208	.1549	.5890
266	.3996	.1167	.8338	.5508	.2679	.9849	.7020	.4191	.8532	.2873	.7215	.1556	.5897
269	.4001	.1172	.8343	.5513	.2684	.9855	.7026	.4196	.8538	.2880	.7221	.1563	.5904
272	.4006	.1177	.8348	.5519	.2690	.9860	.7031	.4202	.8544	.2886	.7228	.1569	.5911
429275	70.4011	72.1182	73.8353	75.5524	77.2695	78.9866	80.7037	82.4208	85.8550	89.2892	92.7234	96.1576	99.5918
278	.4016	.1187	.8358	.5529	.2700	.9872	.7043	.4214	.8556	.2898	.7240	.1583	.5925
281	.4021	.1192	.8363	.5535	.2706	.9877	.7048	.4220	.8562	.2904	.7247	.1589	.5932
284	.4026	.1197	.8368	.5540	.2711	.9883	.7054	.4225	.8568	.2911	.7253	.1596	.5939
287	.4031	.1202	.8374	.5545	.2717	.9888	.7060	.4231	.8574	.2917	.7260	.1603	.5946
429290	70.4036	72.1207	73.8379	75.5550	77.2722	78.9894	80.7065	82.4237	85.8580	89.2923	92.7266	96.1610	99.5953
293	.4041	.1212	.8384	.5556	.2727	.9899	.7071	.4243	.8586	.2929	.7273	.1616	.5960
296	.4045	.1217	.8389	.5561	.2733	.9905	.7076	.4248	.8592	.2936	.7279	.1623	.5967
299	.4050	.1222	.8394	.5566	.2738	.9910	.7082	.4254	.8598	.2942	.7286	.1630	.5974
302	.4055	.1227	.8399	.5572	.2744	.9916	.7088	.4260	.8604	.2948	.7292	.1636	.5981
429305	70.4060	72.1232	73.8405	75.5577	77.2749	78.9921	80.7093	82.4266	85.8610	89.2954	92.7299	96.1643	99.5988
308	.4065	.1237	.8410	.5582	.2754	.9927	.7099	.4271	.8616	.2961	.7305	.1650	.5995
311	.4070	.1242	.8415	.5587	.2760	.9932	.7105	.4277	.8622	.2967	.7312	.1657	.6002
314	.4075	.1248	.8420	.5593	.2765	.9938	.7110	.4283	.8628	.2973	.7318	.1663	.6008
317	.4080	.1253	.8425	.5598	.2771	.9943	.7116	.4289	.8634	.2979	.7325	.1670	.6015
429320	70.4085	72.1258	73.8430	75.5603	77.2776	78.9949	80.7122	82.4294	85.8640	89.2986	92.7331	96.1677	99.6022
323	.4090	.1263	.8436	.5608	.2781	.9954	.7127	.4300	.8646	.2992	.7338	.1684	.6029
326	.4095	.1268	.8441	.5614	.2787	.9960	.7133	.4306	.8652	.2998	.7344	.1690	.6036
329	.4100	.1273	.8446	.5619	.2792	.9965	.7139	.4312	.8658	.3004	.7351	.1697	.6043
332	.4104	.1278	.8451	.5624	.2798	.9971	.7144	.4317	.8664	.3011	.7357	.1704	6050
429335	70.4109	72.1283	73.8456	85.5630	77.2803	78.9976	80.7150	82.4323	85.8670	89.3017	92.7364	96.1710	99.6057
338	.4114	.1288	.8461	.5635	.2808	.9982	.7155	.4329	.8676	.3023	.7370	.1717	.6064
341	.4119	.1293	.8467	.5640	.2814	.9987	.7161	.4335	.8682	.3029	.7377	.1724	.6071
344	.4124	.1298	.8472	.5645	.2819	.9993	.7167	.4340	.8688	.3036	.7383	.1731	.6078
347	.4129	.1303	.8477	.5651	.2825	.9998	.7172	.4346	.8694	.3042	.7390	.1737	.6085
429350	70.4134	72.1308	73.8482	75.5656	77.2830	79.0004	80.7178	82.4352	85.8700	89.3048	92.7396	96.1744	99.6092
353	.4139	.1313	.8487	.5661	.2835	.0010	.7184	.4358	.8706	.3054	.7402	.1751	.6099
356	.4144	.1318	.8492	.5667	.2841	.0015	.7189	.4364	.8712	.3060	.7409	.1757	.6106
359	.4149	.1323	.8497	.5672	.2846	.0021	.7195	.4369	.8718	.3067	.7415	.1764	.6113
362	.4154	.1328	.8503	.5677	.2852	.0026	.7201	.4375	.8724	.3073	.7422	.1771	.6120
429365	70.4159	72.1333	73.8508	75.5682	77.2857	79.0032	80.7206	82.4381	85.8730	89.3079	92.7428	96.1778	99.6127
368	.4164	.1338	.8513	.5688	.2862	.0037	.7212	.4387	.8736	.3085	.7435	.1784	.6134
371	.4168	.1343	.8518	.5693	.2868	.0043	.7217	.4392	.8742	.3092	.7441	.1791	.6141
374	.4173	.1348	.8523	.5698	.2873	.0048	.7223	.4398	.8748	.3098	.7448	.1798	.6148
377	.4178	.1353	.8528	.5704	.2879	.0054	.7229	.4404	.8754	.3104	.7454	.1804	6155
429380	70.4183	72.1358	73.8534	75.5709	77.2884	79.0059	80.7234	82.4410	85.8760	89.3110	92.7461	96.1811	99.6162
383	.4188	.1363	.8539	.5714	.2889	.0065	.7240	.4415	.8766	.3117	.7467	.1818	.6169
386	.4193	.1368	.8544	.5719	.2895	.0070	.7246	.4421	.8772	.3123	.7474	.1825	.6176
389	.4198	.1374	.8549	.5725	.2900	.0076	.7251	.4427	.8778	.3129	.7480	.1831	.6182
392	.4203	.1379	.8554	.5730	.2906	.0081	.7257	.4433	.8784	.3135	.7487	.1838	.6189
429395	70.4208	72.1384	73.8559	75.5735	77.2911	79.0087	80.7263	82.4438	85.8790	89.3142	92.7493	96.1845	99.6196
398	.4213	.1389	.8565	.5740	.2916	.0092	.7268	.4444	.8796	.3148	.7500	.1852	.6203
401	.4218	.1394	.8570	.5746	.2922	.0098	.7274	.4450	.8802	.3154	.7506	.1858	.6210
404	.4223	.1399	.8575	.5751	.2927	.0103	.7280	.4456	.8808	.3160	.7513	.1865	.6217
407	.4227	.1404	.8580	.5756	.2933	.0109	.7285	.4461	.8814	.3167	.7519	.1872	.6224
429410	70.4232	72.1409	73.8585	75.5762	77.2938	79.0114	80.7291	82.4467	85.8820	89.3173	92.7526	96.1878	99.6231
413	.4237	.1414	.8590	.5767	.2943	.0120	.7296	.4473	.8826	.3179	.7532	.1885	.6238
416	.4242	.1419	.8596	.5772	.2949	.0125	.7302	.4479	.8832	.3185	.7539	.1892	.6245
419	.4247	.1424	.8601	.5777	.2954	.0131	.7308	.4484	.8838	.3192	.7545	.1899	.6252
422	.4252	.1429	.8606	.5783	.2960	.0136	.7313	.4490	.8844	.3198	.7552	.1905	.6259
429425	70.4257	72.1434	73.8611	75.5788	77.2965	79.0142	80.7319	82.4496	85.8850	89.3204	92.7558	96.1912	99.6266
428	.4262	.1439	.8616	.5793	.2970	.0148	.7325	.4502	.8856	.3210	.7564	.1919	.6273
431	.4267	.1444	.8621	.5799	.2976	.0153	.7330	.4508	.8862	.3216	.7571	.1925	.6280
434	.4272	.1449	.8626	.5804	.2981	.0159	.7336	.4513	.8868	.3223	.7577	.1932	.6287
437	.4277	.1454	.8632	.5809	.2987	.0164	.7342	.4519	.8874	.3229	.7584	.1939	.6294
429440	70.4282	72.1459	73.8637	75.5814	77.2992	79.0170	80.7347	82.4525	85.8880	89.3235	92.7590	96.1946	99.6301
443	.4287	.1464	.8642	.5820	.2997	.0175	.7353	.4531	.8886	.3241	.7597	.1952	.6308
446	.4291	.1469	.8647	.5825	.3003	.0181	.7358	.4536	.8892	.3248	.7603	.1959	.6315
449	.4296	.1474	.8652	.5830	.3008	.0186	.7364	.4542	.8898	.3254	.7610	.1966	.6322
452	.4301	.1479	.8657	.5836	.3014	.0192	.7370	.4548	.8904	.3260	.7616	.1972	.6329
429455	70.4306	72.1484	73.8663	75.5841	77.3019	79.0197	80.7375	82.4554	85.8910	89.3266	92.7623	96.1979	99.6336
458	.4311	.1489	.8668	.5846	.3024	.0203	.7381	.4559	.8916	.3273	.7629	.1986	.6343
461	.4316	.1494	.8673	.5851	.3030	.0208	.7387	.4565	.8922	.3279	.7636	.1993	.6350
464	.4321	.1500	.8678	.5857	.3035	.0214	.7392	.4571	.8928	.3285	.7642	.1999	.6356
467	.4326	.1505	.8683	.5862	.3041	.0219	.7398	.4577	.8934	.3291	.7649	.2006	.6363
429470	70.4331	72.1510	73.8688	75.5867	77.3046	79.0225	80.7404	82.4582	85.8940	89.3298	92.7655	96.2013	99.6370
473	.4336	.1515	.8694	.5872	.3051	.0230	.7409	.4588	.8946	.3304	.7662	.2020	.6377
476	.4341	.1520	.8699	.5878	.3057	.0236	.7415	.4594	.8952	.3310	.7668	.2026	.6384
479	.4346	.1525	.8704	.5883	.3062	.0241	.7421	.4600	.8958	.3316	.7675	.2033	.6391
482	.4350	.1530	.8709	.5888	.3068	.0247	.7426	.4605	.8964	.3323	.7681	.2040	.6398
429485	70.4355	72.1535	73.8714	75.5894	77.3073	79.0252	80.7432	82.4611	85.8970	89.3329	92.7688	96.2046	99.6405
488	.4360	.1540	.8719	.5899	.3078	.0258	.7437	.4617	.8976	.3335	.7694	.2053	.6412
491	.4365	.1545	.8725	.5904	.3084	.0263	.7443	.4623	.8982	.3341	.7701	.2060	.6419
494	.4370	.1550	.8730	.5909	.3089	.0269	.7449	.4628	.8988	.3348	.7707	.2067	.6426
497	.4375	.1555	.8735	.5915	.3095	.0274	.7454	.4634	.8994	.3354	.7714	.2073	.6433
429500	70.4380	72.1560	73.8740	75.5920	77.3100	79.0280	80.7460	82.4640	85.9000	89.3360	92.7720	96.2080	99.6440

H A R M O N I C S

BASIC FREQ.	112	116	120	124	128	132	136	140	144	148	152	156	160
429500	48.1040	49.8220	51.5400	53.2580	54.9760	56.6940	58.4120	60.1300	61.8480	63.5660	65.2840	67.0020	68.7200
503	.1043	.8223	.5404	.2584	.9764	.6944	.4124	.1304	.8484	.5664	.2845	.0025	.7205
506	.1047	.8227	.5407	.2587	.9768	.6948	.4128	.1308	.8489	.5669	.2849	.0029	.7210
509	.1050	.8230	.5411	.2591	.9772	.6952	.4132	.1313	.8493	.5673	.2854	.0034	.7214
512	.1053	.8234	.5414	.2595	.9775	.6956	.4136	.1317	.8497	.5678	.2858	.0039	.7219
429515	48.1057	49.8237	51.5418	53.2599	54.9779	56.6960	58.4140	60.1321	61.8502	63.5682	65.2863	67.0043	68.7224
518	.1060	.8241	.5422	.2602	.9783	.6964	.4144	.1325	.8506	.5687	.2867	.0048	.7229
521	.1064	.8244	.5425	.2606	.9787	.6968	.4149	.1329	.8510	.5691	.2872	.0053	.7234
524	.1067	.8248	.5429	.2610	.9791	.6972	.4153	.1334	.8515	.5696	.2876	.0057	.7238
527	.1070	.8251	.5432	.2613	.9795	.6976	.4157	.1338	.8519	.5700	.2881	.0062	.7243
429530	48.1074	49.8255	51.5436	53.2617	54.9798	56.6980	58.4161	60.1342	61.8523	63.5704	65.2886	67.0067	68.7248
533	.1077	.8258	.5440	.2621	.9802	.6984	.4165	.1346	.8528	.5709	.2890	.0071	.7253
536	.1080	.8262	.5443	.2625	.9806	.6988	.4169	.1350	.8532	.5713	.2895	.0076	.7258
539	.1084	.8265	.5447	.2628	.9810	.6991	.4173	.1355	.8536	.5718	.2899	.0081	.7262
542	.1087	.8269	.5450	.2632	.9814	.6995	.4177	.1359	.8540	.5722	.2904	.0086	.7267
429545	48.1090	49.8272	51.5454	53.2636	54.9818	56.6999	58.4181	60.1363	61.8545	63.5727	65.2908	67.0090	68.7272
548	.1094	.8276	.5458	.2640	.9821	.7003	.4185	.1367	.8549	.5731	.2913	.0095	.7277
551	.1097	.8279	.5461	.2643	.9825	.7007	.4189	.1371	.8553	.5735	.2918	.0100	.7282
554	.1100	.8283	.5465	.2647	.9829	.7011	.4193	.1376	.8558	.5740	.2922	.0104	.7286
557	.1104	.8286	.5468	.2651	.9833	.7015	.4198	.1380	.8562	.5744	.2927	.0109	.7291
429560	48.1107	49.8290	51.5472	53.2654	54.9837	56.7019	58.4202	60.1384	61.8566	63.5749	65.2931	67.0114	68.7296
563	.1111	.8293	.5476	.2658	.9841	.7023	.4206	.1388	.8571	.5753	.2936	.0118	.7301
566	.1114	.8297	.5479	.2662	.9844	.7027	.4210	.1392	.8575	.5758	.2940	.0123	.7306
569	.1117	.8300	.5483	.2666	.9848	.7031	.4214	.1397	.8579	.5762	.2945	.0128	.7310
572	.1121	.8304	.5486	.2669	.9852	.7035	.4218	.1401	.8584	.5767	.2949	.0132	.7315
429575	48.1124	49.8307	51.5490	53.2673	54.9856	56.7039	58.4222	60.1405	61.8588	63.5771	65.2954	67.0137	68.7320
578	.1127	.8310	.5494	.2677	.9860	.7043	.4226	.1409	.8592	.5775	.2959	.0142	.7325
581	.1131	.8314	.5497	.2680	.9864	.7047	.4230	.1413	.8597	.5780	.2963	.0146	.7330
584	.1134	.8317	.5501	.2684	.9868	.7051	.4234	.1418	.8601	.5784	.2968	.0151	.7334
587	.1137	.8321	.5504	.2688	.9871	.7055	.4238	.1422	.8605	.5789	.2972	.0156	.7339
429590	48.1141	49.8324	51.5508	53.2692	54.9875	56.7059	58.4242	60.1426	61.8610	63.5793	65.2977	67.0160	68.7344
593	.1144	.8328	.5512	.2695	.9879	.7063	.4246	.1430	.8614	.5798	.2981	.0165	.7349
596	.1148	.8331	.5515	.2699	.9883	.7067	.4251	.1434	.8618	.5802	.2986	.0170	.7354
599	.1151	.8335	.5519	.2703	.9887	.7071	.4255	.1439	.8623	.5807	.2990	.0174	.7358
602	.1154	.8338	.5522	.2706	.9891	.7075	.4259	.1443	.8627	.5811	.2995	.0179	.7363
429605	48.1158	49.8342	51.5526	53.2710	54.9894	56.7079	58.4263	60.1447	61.8631	63.5815	65.3000	67.0184	68.7368
608	.1161	.8345	.5530	.2714	.9898	.7083	.4267	.1451	.8636	.5820	.3004	.0188	.7373
611	.1164	.8349	.5533	.2718	.9902	.7087	.4271	.1455	.8640	.5824	.3009	.0193	.7378
614	.1168	.8352	.5537	.2721	.9906	.7090	.4275	.1460	.8644	.5829	.3013	.0198	.7382
617	.1171	.8356	.5540	.2725	.9910	.7094	.4279	.1464	.8648	.5833	.3018	.0203	.7387
429620	48.1174	49.8359	51.5544	53.2729	54.9914	56.7098	58.4283	60.1468	61.8653	63.5838	65.3022	67.0207	68.7392
623	.1178	.8363	.5548	.2733	.9917	.7102	.4287	.1472	.8657	.5842	.3027	.0212	.7397
626	.1181	.8366	.5551	.2736	.9921	.7106	.4291	.1476	.8661	.5846	.3032	.0217	.7402
629	.1184	.8370	.5555	.2740	.9925	.7110	.4295	.1481	.8666	.5851	.3036	.0221	.7406
632	.1188	.8373	.5558	.2744	.9929	.7114	.4300	.1485	.8670	.5855	.3041	.0226	.7411
429635	48.1191	49.8377	51.5562	53.2747	54.9933	56.7118	58.4304	60.1489	61.8674	63.5860	65.3045	67.0231	68.7416
638	.1195	.8380	.5566	.2751	.9937	.7122	.4308	.1493	.8679	.5864	.3050	.0235	.7421
641	.1198	.8384	.5569	.2755	.9940	.7126	.4312	.1497	.8683	.5869	.3054	.0240	.7426
644	.1201	.8387	.5573	.2759	.9944	.7130	.4316	.1502	.8687	.5873	.3059	.0245	.7430
647	.1205	.8391	.5576	.2762	.9948	.7134	.4320	.1506	.8692	.5878	.3063	.0249	.7435
429650	48.1208	49.8394	51.5580	53.2766	54.9952	56.7138	58.4324	60.1510	61.8696	63.5882	65.3068	67.0254	68.7440
653	.1211	.8397	.5584	.2770	.9956	.7142	.4328	.1514	.8700	.5886	.3073	.0259	.7445
656	.1215	.8401	.5587	.2773	.9960	.7146	.4332	.1518	.8705	.5891	.3077	.0263	.7450
659	.1218	.8404	.5591	.2777	.9964	.7150	.4336	.1523	.8709	.5895	.3082	.0268	.7454
662	.1221	.8408	.5594	.2781	.9967	.7154	.4340	.1527	.8713	.5900	.3086	.0273	.7459
429665	48.1225	49.8411	51.5598	53.2785	54.9971	56.7158	58.4344	60.1531	61.8718	63.5904	65.3091	67.0277	68.7464
668	.1228	.8415	.5602	.2788	.9975	.7162	.4348	.1535	.8722	.5909	.3095	.0282	.7469
671	.1232	.8418	.5605	.2792	.9979	.7166	.4353	.1539	.8726	.5913	.3100	.0287	.7474
674	.1235	.8422	.5609	.2796	.9983	.7170	.4357	.1544	.8731	.5918	.3104	.0291	.7478
677	.1238	.8425	.5612	.2799	.9987	.7174	.4361	.1548	.8735	.5922	.3109	.0296	.7483
429680	48.1242	49.8429	51.5616	53.2803	54.9990	56.7178	58.4365	60.1552	61.8739	63.5926	65.3114	67.0301	68.7488
683	.1245	.8432	.5620	.2807	.9994	.7182	.4369	.1556	.8744	.5931	.3118	.0305	.7493
686	.1248	.8436	.5623	.2811	.9998	.7186	.4373	.1560	.8748	.5935	.3123	.0310	.7498
689	.1252	.8439	.5627	.2814	55.0002	.7189	.4377	.1565	.8752	.5940	.3127	.0315	.7502
692	.1255	.8443	.5630	.2818	.0006	.7193	.4381	.1569	.8756	.5944	.3132	.0320	.7507
429695	48.1258	49.8446	51.5634	53.2822	55.0010	56.7197	58.4385	60.1573	61.8761	63.5949	65.3136	67.0324	68.7512
698	.1262	.8450	.5638	.2826	.0013	.7201	.4389	.1577	.8765	.5953	.3141	.0329	.7517
701	.1265	.8453	.5641	.2829	.0017	.7205	.4393	.1581	.8769	.5957	.3146	.0334	.7522
704	.1268	.8457	.5645	.2833	.0021	.7209	.4397	.1586	.8774	.5962	.3150	.0338	.7526
707	.1272	.8460	.5648	.2837	.0025	.7213	.4402	.1590	.8778	.5966	.3155	.0343	.7531
429710	48.1275	49.8464	51.5652	53.2840	55.0029	56.7217	58.4406	60.1594	61.8782	63.5971	65.3159	67.0348	68.7536
713	.1279	.8467	.5656	.2844	.0033	.7221	.4410	.1598	.8787	.5975	.3164	.0352	.7541
716	.1282	.8471	.5659	.2848	.0036	.7225	.4414	.1602	.8791	.5980	.3168	.0357	.7546
719	.1285	.8474	.5663	.2852	.0040	.7229	.4418	.1607	.8795	.5984	.3173	.0362	.7550
722	.1289	.8478	.5666	.2855	.0044	.7233	.4422	.1611	.8800	.5989	.3177	.0366	.7555
429725	48.1292	49.8481	51.5670	53.2859	55.0048	56.7237	58.4426	60.1615	61.8804	63.5993	65.3182	67.0371	68.7560
728	.1295	.8484	.5674	.2863	.0052	.7241	.4430	.1619	.8808	.5997	.3187	.0376	.7565
731	.1299	.8488	.5677	.2866	.0056	.7245	.4434	.1623	.8813	.6002	.3191	.0380	.7570
734	.1302	.8491	.5681	.2870	.0060	.7249	.4438	.1628	.8817	.6006	.3196	.0385	.7574
737	.1305	.8495	.5684	.2874	.0063	.7253	.4442	.1632	.8821	.6011	.3200	.0390	.7579
429740	48.1309	49.8498	51.5688	53.2878	55.0067	56.7257	58.4446	60.1636	61.8826	63.6015	65.3205	67.0394	68.7584
743	.1312	.8502	.5692	.2881	.0071	.7261	.4450	.1640	.8830	.6020	.3209	.0399	.7589
746	.1316	.8505	.5695	.2885	.0075	.7265	.4455	.1644	.8834	.6024	.3214	.0404	.7594
749	.1319	.8509	.5699	.2889	.0079	.7269	.4459	.1649	.8839	.6029	.3218	.0408	.7598
752	.1322	.8512	.5702	.2892	.0083	.7273	.4463	.1653	.8843	.6033	.3223	.0413	.7603
429755	48.1326	49.8516	51.5706	53.2896	55.0086	56.7277	58.4467	60.1657	61.8847	63.6037	65.3228	67.0418	68.7608
758	.1329	.8519	.5710	.2900	.0090	.7281	.4471	.1661	.8852	.6042	.3232	.0422	.7613
761	.1332	.8523	.5713	.2904	.0094	.7285	.4475	.1665	.8856	.6046	.3237	.0427	.7618
764	.1336	.8526	.5717	.2907	.0098	.7288	.4479	.1670	.8860	.6051	.3241	.0432	.7622
767	.1339	.8530	.5720	.2911	.0102	.7292	.4483	.1674	.8864	.6055	.3246	.0437	.7627
429770	48.1342	49.8533	51.5724	53.2915	55.0106	56.7296	58.4487	60.1678	61.8869	63.6060	65.3250	67.0441	68.7632
773	.1346	.8537	.5728	.2919	.0109	.7300	.4491	.1682	.8873	.6064	.3255	.0446	.7637
776	.1349	.8540	.5731	.2922	.0113	.7304	.4495	.1686	.8877	.6068	.3260	.0451	.7642
779	.1352	.8544	.5735	.2926	.0117	.7308	.4499	.1691	.8882	.6073	.3264	.0455	.7646
782	.1356	.8547	.5738	.2930	.0121	.7312	.4504	.1695	.8886	.6077	.3269	.0460	.7651
429785	48.1359	49.8551	51.5742	53.2933	55.0125	56.7316	58.4508	60.1699	61.8890	63.6082	65.3273	67.0465	68.7656
788	.1363	.8554	.5746	.2937	.0129	.7320	.4512	.1703	.8895	.6086	.3278	.0469	.7661
791	.1366	.8558	.5749	.2941	.0132	.7324	.4516	.1707	.8899	.6091	.3282	.0474	.7666
794	.1369	.8561	.5753	.2945	.0136	.7328	.3520	.1712	.8903	.6095	.3287	.0479	.7670
797	.1373	.8565	.5756	.2948	.0140	.7332	.4524	.1716	.8908	.6100	.3291	.0483	.7675
429800	48.1376	49.8568	51.5760	53.2952	55.0144	56.7336	58.4528	60.1720	61.8912	63.6104	65.3296	67.0488	68.7680

MEGACYCLES PER SECOND

HARMONICS

BASIC FREQ.	164	168	172	176	180	184	188	192	200	208	216	224	232
429500	70.4380	72.1560	73.8740	75.5920	77.3100	79.0280	80.7460	82.4640	85.9000	89.3360	92.7720	96.2080	99.6440
503	.4385	.1565	.8745	.5925	.3105	.0286	.7466	.4646	.9006	.3366	.7726	.2087	.6447
506	.4390	.1570	.8750	.5931	.3111	.0291	.7471	.4652	.9012	.3372	.7733	.2093	.6454
509	.4395	.1575	.8755	.5936	.3116	.0297	.7477	.4657	.9018	.3379	.7739	.2100	.6461
512	.4400	.1580	.8761	.5941	.3122	.0302	.7483	.4663	.9024	.3385	.7746	.2107	.6468
429515	70.4405	72.1585	73.8766	75.5946	77.3127	79.0308	80.7488	82.4669	85.9030	89.3391	92.7752	96.2114	99.6475
518	.4410	.1590	.8771	.5952	.3132	.0313	.7494	.4675	.9036	.3397	.7759	.2120	.6482
521	.4414	.1595	.8776	.5957	.3138	.0319	.7499	.4680	.9042	.3404	.7765	.2127	.6489
524	.4419	.1600	.8781	.5962	.3143	.0324	.7505	.4686	.9048	.3410	.7772	.2134	.6496
527	.4424	.1605	.8786	.5968	.3149	.0330	.7511	.4692	.9054	.3416	.7778	.2140	.6503
429530	70.4429	72.1610	73.8792	75.5973	77.3154	79.0335	80.7516	82.4698	85.9060	89.3422	92.7785	96.2147	99.6510
533	.4434	.1615	.8797	.5978	.3159	.0341	.7522	.4703	.9066	.3429	.7791	.2154	.6517
536	.4439	.1620	.8802	.5983	.3165	.0346	.7528	.4709	.9072	.3435	.7798	.2161	.6524
539	.4444	.1626	.8807	.5989	.3170	.0352	.7533	.4715	.9078	.3441	.7804	.2167	.6530
542	.4449	.1631	.8812	.5994	.3176	.0357	.7539	.4721	.9084	.3447	.7811	.2174	.6537
429545	70.4454	72.1636	73.8817	75.5999	77.3181	79.0363	80.7545	82.4726	85.9090	89.3454	92.7817	96.2181	99.6544
548	.4459	.1641	.8823	.6004	.3186	.0368	.7550	.4732	.9096	.3460	.7824	.2188	.6551
551	.4464	.1646	.8828	.6010	.3192	.0374	.7556	.4738	.9102	.3466	.7830	.2194	.6558
554	.4469	.1651	.8833	.6015	.3197	.0379	.7562	.4744	.9108	.3472	.7837	.2201	.6565
557	.4473	.1656	.8838	.6020	.3203	.0385	.7567	.4749	.9114	.3479	.7843	.2208	.6572
429560	70.4478	72.1661	73.8843	75.6026	77.3208	79.0390	80.7573	82.4755	85.9120	89.3485	92.7850	96.2214	99.6579
563	.4483	.1666	.8848	.6031	.3213	.0396	.7578	.4761	.9126	.3491	.7856	.2221	.6586
566	.4488	.1671	.8854	.6036	.3219	.0401	.7584	.4767	.9132	.3497	.7863	.2228	.6593
569	.4493	.1676	.8859	.6041	.3224	.0407	.7590	.4772	.9138	.3504	.7869	.2235	.6600
572	.4498	.1681	.8864	.6047	.3230	.0412	.7595	.4778	.9144	.3510	.7876	.2241	.6607
429575	70.4503	72.1686	73.8869	75.6052	77.3235	79.0418	80.7601	82.4784	85.9150	89.3516	92.7882	96.2248	99.6614
578	.4508	.1691	.8874	.6057	.3240	.0424	.7607	.4790	.9156	.3522	.7888	.2255	.6621
581	.4513	.1696	.8879	.6063	.3246	.0429	.7612	.4796	.9162	.3528	.7895	.2261	.6628
584	.4518	.1701	.8884	.6068	.3251	.0435	.7618	.4801	.9168	.3535	.7901	.2268	.6635
587	.4523	.1706	.8890	.6073	.3257	.0440	.7624	.4807	.9174	.3541	.7908	.2275	.6642
429590	70.4528	72.1711	73.8895	75.6078	77.3262	79.0446	80.7629	82.4813	85.9180	89.3547	92.7914	96.2282	99.6649
593	.4533	.1716	.8900	.6084	.3267	.0451	.7635	.4819	.9186	.3553	.7921	.2288	.6656
596	.4537	.1721	.8905	.6089	.3273	.0457	.7640	.4824	.9192	.3560	.7927	.2295	.6663
599	.4542	.1726	.8910	.6094	.3278	.0462	.7646	.8430	.9198	.3566	.7934	.2302	.6670
602	.4547	.1731	.8915	.6100	.3284	.0468	.7652	.4836	.9204	.3572	.7940	.2308	.6677
429605	70.4552	72.1736	73.8921	75.6105	77.3289	79.0473	80.7657	82.4842	85.9210	89.3578	92.7947	96.2315	99.6684
608	.4557	.1741	.8926	.6110	.3294	.0479	.7663	.4847	.9216	.3585	.7953	.2322	.6691
611	.4562	.1746	.8931	.6115	.3300	.0484	.7669	.4853	.9222	.3591	.7960	.2329	.6698
614	.4567	.1752	.8936	.6121	.3305	.0490	.7674	.4859	.9228	.3597	.7966	.2335	.6704
617	.4572	.1757	.8941	.6126	.3311	.0495	.7680	.4865	.9234	.3603	.7973	.2342	.6711
429620	70.4577	72.1762	73.8946	75.6131	77.3316	79.0501	80.7686	82.4870	85.9240	89.3610	92.7979	96.2349	99.6718
623	.4582	.1767	.8952	.6136	.3321	.0506	.7691	.4876	.9246	.3616	.7986	.2356	.6725
626	.4587	.1772	.8957	.6142	.3327	.0512	.7697	.4882	.9252	.3622	.7992	.2362	.6732
629	.4592	.1777	.8962	.6147	.3332	.0517	.7703	.4888	.9258	.3628	.7999	.2369	.6739
632	.4596	.1782	.8967	.6152	.3338	.0523	.7708	.4893	.9264	.3635	.8005	.2376	.6746
429635	70.4601	72.1787	73.8972	75.6158	77.3343	79.0528	80.7714	82.4899	85.9270	89.3641	92.8012	96.2382	99.6753
638	.4606	.1792	.8977	.6163	.3348	.0534	.7719	.4905	.9276	.3647	.8018	.2389	.6760
641	.4611	.1797	.8983	.6168	.3354	.0539	.7725	.4911	.9282	.3653	.8025	.2396	.6767
644	.4616	.1802	.8988	.6173	.3359	.0545	.7731	.4916	.9288	.3660	.8031	.2403	.6774
647	.4621	.1807	.8993	.6179	.3365	.0550	.7736	.4922	.9294	.3666	.8038	.2409	.6781
429650	70.4626	72.1812	73.8998	75.6184	77.3370	79.0556	80.7742	82.4928	85.9300	89.3672	92.8044	96.2416	99.6788
653	.4631	.1817	.9003	.6189	.3375	.0562	.7748	.4934	.9306	.3678	.8050	.2423	.6795
656	.4636	.1822	.9008	.6195	.3381	.0567	.7753	.4940	.9312	.3684	.8057	.2429	.6802
659	.4641	.1827	.9013	.6200	.3386	.0573	.7759	.4945	.9318	.3691	.8063	.2436	.6809
662	.4646	.1832	.9019	.6205	.3392	.0578	.7765	.4951	.9324	.3697	.8070	.2443	.6816
429665	70.4651	72.1837	73.9024	75.6210	77.3397	79.0584	80.7770	82.4957	85.9330	89.3703	92.8076	96.2450	99.6823
668	.4656	.1842	.9029	.6216	.3402	.0589	.7776	.4963	.9336	.3709	.8083	.2456	.6830
671	.4660	.1847	.9034	.6221	.3408	.0595	.7781	.4968	.9342	.3716	.8089	.2463	.6837
674	.4665	.1852	.9039	.6226	.3413	.0600	.7787	.4974	.9348	.3722	.8096	.2470	.6844
677	.4670	.1857	.9044	.6232	.3419	.0606	.7793	.4980	.9254	.3728	.8102	.2476	.6851
429680	70.4675	72.1862	73.9050	75.6237	77.3424	79.0611	80.7798	82.4986	85.9360	89.3734	92.8109	96.2483	99.6858
683	.4680	.1867	.9055	.6242	.3429	.0617	.7804	.4991	.9366	.3741	.8115	.2490	.6865
686	.4685	.1872	.9060	.6247	.3435	.0622	.7810	.4997	.9372	.3747	.8122	.2497	.6872
689	.4690	.1878	.9065	.6253	.3440	.0628	.7815	.5003	.9378	.3753	.8128	.2503	.6878
692	.4695	.1883	.9070	.6258	.3446	.0633	.7821	.5009	.9384	.3759	.8135	.2510	.6885
429695	70.4700	72.1888	73.9075	75.6263	77.3451	79.0639	80.7827	82.5014	85.9390	89.3766	92.8141	96.2517	99.6892
698	.4705	.1893	.9081	.6268	.3456	.0644	.7832	.5020	.9396	.3772	.8148	.2524	.6899
701	.4710	.1898	.9086	.6274	.3462	.0650	.7838	.5026	.9402	.3778	.8154	.2530	.6906
704	.4715	.1903	.9091	.6279	.3467	.0655	.7844	.5032	.9408	.3784	.8161	.2537	.6913
707	.4719	.1908	.9096	.6284	.3473	.0661	.7849	.5037	.9414	.3791	.8167	.3544	.6920
429710	70.4724	72.1913	73.9101	75.6290	77.3478	79.0666	80.7855	82.5043	85.9420	89.3797	92.8174	96.2550	99.6927
713	.4729	.1918	.9106	.6295	.3483	.0672	.7860	.5049	.9426	.3803	.8180	.2557	.6934
716	.4734	.1923	.9112	.6300	.3489	.0677	.7866	.5055	.9432	.3809	.8187	.2564	.6941
719	.4739	.1928	.9117	.6305	.3494	.0683	.7872	.5060	.9438	.3816	.8193	.2571	.6948
722	.4744	.1933	.9122	.6311	.3500	.0688	.7877	.5066	.9444	.3822	.8200	.2577	.6955
429725	70.4749	72.1938	73.9127	75.6316	77.3505	79.0694	80.7883	82.5072	85.9450	89.3828	92.8206	96.2584	99.6962
728	.4754	.1943	.9132	.6321	.3510	.0700	.7889	.5078	.9456	.3834	.8212	.2591	.6969
731	.4759	.1948	.9137	.6327	.3516	.0705	.7894	.5084	.9462	.3840	.8219	.2597	.6976
734	.4764	.1953	.9142	.6332	.3521	.0711	.7900	.5089	.9468	.3847	.8225	.2604	.6983
737	.4769	.1958	.9148	.6337	.3527	.0716	.7906	.5095	.9474	.3853	.8232	.2611	.6990
429740	70.4774	72.1963	73.9153	75.6342	77.3532	79.0722	80.7911	82.5101	85.9480	89.3859	92.8238	96.2618	99.6997
743	.4779	.1968	.9158	.6348	.3537	.0727	.7917	.5107	.9486	.3865	.8245	.2624	.7004
746	.4783	.1973	.9163	.6353	.3543	.0733	.7922	.5112	.9492	.3872	.8251	.2631	.7011
749	.4788	.1978	.9168	.6358	.3548	.0738	.7928	.5118	.9498	.3878	.8258	.2638	.7018
752	.4793	.1983	.9173	.6364	.3554	.0744	.7934	.5124	.9504	.3884	.8264	.2644	.7025
429755	70.4798	72.1988	73.9179	75.6369	77.3559	79.0749	80.7939	82.5130	85.9510	89.3890	92.8271	96.2651	99.7032
758	.4803	.1993	.9184	.6374	.3564	.0755	.7945	.5135	.9516	.3897	.8277	.2658	.7039
761	.4808	.1998	.9189	.6379	.3570	.0760	.7951	.5141	.9522	.3903	.8284	.2665	.7046
764	.4813	.2004	.9194	.6385	.3575	.0766	.7956	.5147	.9528	.3909	.9290	.2671	.7052
767	.4818	.2009	.9199	.6390	.3581	.0771	.7962	.5153	.9534	.3915	.8297	.2678	.7059
429770	70.4823	72.2014	73.9204	75.6395	77.3586	79.0777	80.7968	82.5158	85.9540	89.3922	92.8303	96.2685	99.7066
773	.4828	.2019	.9210	.6400	.3591	.0782	.7973	.5164	.9546	.3928	.8310	.2692	.7073
776	.4833	.2024	.9215	.6406	.3597	.0788	.7979	.5170	.9552	.3934	.8316	.2698	.7080
779	.4838	.2029	.9220	.6411	.3602	.0793	.7985	.5176	.9558	.3940	.8323	.2705	.7087
782	.4842	.2034	.9225	.6416	.3608	.0799	.7990	.5181	.9564	.3947	.8329	.2712	.7094
429785	70.4847	72.2039	73.9230	75.6422	77.3613	79.0804	80.7996	82.5187	85.9570	89.3953	92.8336	96.2718	99.7101
788	.4852	.2044	.9235	.6427	.3618	.0810	.8001	.5193	.9576	.3959	.8342	.2725	.7108
791	.4857	.2049	.9241	.6432	.3624	.0815	.8007	.5199	.9582	.3965	.8349	.2732	.7115
794	.4862	.2054	.9246	.6437	.3629	.0821	.8013	.5204	.9588	.3972	.8355	.2739	.7122
797	.4867	.2059	.9251	.6443	.3635	.0826	.8018	.5210	.9594	.3978	.8362	.2745	.7129
429800	70.4872	72.2064	73.9256	75.6448	77.3640	79.0832	80.8024	82.5216	85.9600	89.3984	92.8368	96.2752	99.7136

MEGACYCLES PER SECOND

H A R M O N I C S

BASIC FREQ.	112	116	120	124	128	132	136	140	144	148	152	156	160
429800	48.1376	49.8568	51.5760	53.2952	55.0144	56.7336	58.4528	60.1720	61.8912	63.6104	65.3296	67.0488	68.7680
803	.1379	.8571	.5764	.2956	.0148	.7340	.4532	.1724	.8916	.6108	.3301	.0493	.7685
806	.1383	.8575	.5767	.2959	.0152	.7344	.4536	.1728	.8921	.6113	.3305	.0497	.7690
809	.1386	.8578	.5771	.2963	.0156	.7348	.4540	.1733	.8925	.6117	.3310	.0502	.7694
812	.1389	.8582	.5774	.2967	.0159	.7352	.4544	.1737	.8929	.6122	.3314	.0507	.7699
429815	48.1393	49.8585	51.5778	53.2971	55.0163	56.7356	58.4548	60.1741	61.8934	62.6126	65.3319	67.0511	68.7704
818	.1396	.8589	.5782	.2974	.0167	.7360	.4552	.1745	.8938	.6131	.3323	.0516	.7709
821	.1400	.8592	.5785	.2978	.0171	.7364	.4557	.1749	.8942	.6135	.3328	.0521	.7714
824	.1403	.8596	.5789	.2982	.0175	.7368	.4561	.1754	.8947	.6140	.3332	.0525	.7718
827	.1406	.8599	.5792	.2985	.0179	.7372	.4565	.1758	.8951	.6144	.3337	.0530	.7723
429830	48.1410	49.8603	51.5796	53.2989	55.0182	56.7376	58.4569	60.1762	61.8955	63.6148	65.3342	67.0535	68.7728
833	.1413	.8606	.5800	.2993	.0186	.7380	.4573	.1766	.8960	.6153	.3346	.0539	.7733
836	.1416	.8610	.5803	.2997	.0190	.7384	.4577	.1770	.8964	.6157	.3351	.0544	.7738
839	.1420	.8613	.5807	.3000	.0194	.7387	.4581	.1775	.8968	.6162	.3355	.0549	.7742
842	.1423	.8617	.5810	.3004	.0198	.7391	.4585	.1779	.8972	.6166	.3360	.0554	.7747
429845	48.1426	49.8620	51.5814	53.3008	55.0202	56.7395	58.4589	60.1783	61.8977	63.6171	65.3364	67.0558	68.7752
848	.1430	.8624	.5818	.3012	.0205	.7399	.4593	.1787	.8981	.6175	.3369	.0563	.7757
851	.1433	.8627	.5821	.3015	.0209	.7403	.4597	.1791	.8985	.6179	.3374	.0568	.7762
854	.1436	.8631	.5825	.3019	.0213	.7407	.4601	.1796	.8990	.6184	.3378	.0572	.7766
857	.1440	.8634	.5828	.3023	.0217	.7411	.4606	.1800	.8994	.6188	.3383	.0577	.7771
429860	48.1443	49.8638	51.5832	53.3026	55.0221	56.7415	58.4610	60.1804	61.8998	63.6193	65.3387	67.0582	68.7776
863	.1447	.8641	.5836	.3030	.0225	.7419	.4614	.1808	.9003	.6197	.3392	.0586	.7781
866	.1450	.8645	.5839	.3034	.0228	.7423	.4618	.1812	.9007	.6202	.3396	.0591	.7786
869	.1453	.8648	.5843	.3038	.0232	.7427	.4622	.1817	.9011	.6206	.3401	.0596	.7790
872	.1457	.8652	.5846	.3041	.0236	.7431	.4626	.1821	.9016	.6211	.3405	.0600	.7795
429875	48.1460	49.8655	51.5850	53.3045	55.0240	56.7435	58.4630	60.1825	61.9020	63.6215	65.3410	67.0605	68.7800
878	.1463	.8658	.5854	.3049	.0244	.7439	.4634	.1829	.9024	.6219	.3415	.0610	.7805
881	.1467	.8662	.5857	.3052	.0248	.7443	.4638	.1833	.9029	.6224	.3419	.0614	.7810
884	.1470	.8665	.5861	.3056	.0252	.7447	.4642	.1838	.9033	.6228	.3424	.0619	.7814
887	.1473	.8669	.5864	.3060	.0255	.7451	.4646	.1842	.9037	.6233	.3428	.0624	.7819
429890	48.1477	49.8672	51.5868	53.3064	55.0259	56.7455	58.4650	60.1846	61.9042	63.6237	65.3433	67.0628	68.7824
893	.1480	.8676	.5872	.3067	.0263	.7459	.4654	.1850	.9046	.6242	.3437	.0633	.7829
896	.1484	.8679	.5875	.3071	.0267	.7463	.4659	.1854	.9050	.6246	.3442	.0638	.7834
899	.1487	.8683	.5879	.3075	.0271	.7467	.4663	.1859	.9055	.6251	.3446	.0642	.7838
902	.1490	.8686	.5882	.3078	.0275	.7471	.4667	.1863	.9059	.6255	.3451	.0647	.7843
429905	48.1494	49.8690	51.5886	53.3082	55.0278	56.7475	58.4671	60.1867	61.9063	63.6259	65.3456	67.0652	68.7848
908	.1497	.8693	.5890	.3086	.0282	.7479	.4675	.1871	.9068	.6264	.3460	.0656	.7853
911	.1500	.8697	.5893	.3090	.0286	.7483	.4679	.1875	.9072	.6268	.3465	.0661	.7858
914	.1504	.8700	.5897	.3093	.0290	.7486	.4683	.1880	.9076	.6273	.3469	.0666	.7862
917	.1507	.8704	.5900	.3097	.0294	.7490	.4687	.1884	.9080	.6277	.3474	.0671	.7867
429920	48.1510	49.8707	51.5904	53.3101	55.0298	56.7494	58.4691	60.1888	61.9085	63.6282	65.3478	67.0675	68.7872
923	.1514	.8711	.5908	.3105	.0301	.7498	.4695	.1892	.9089	.6286	.3483	.0680	.7877
926	.1517	.8714	.5911	.3108	.0305	.7502	.4699	.1896	.9093	.6290	.3488	.0685	.7882
929	.1520	.8718	.5915	.3112	.0309	.7506	.4703	.1901	.9098	.6295	.3492	.0689	.7886
932	.1524	.8721	.5918	.3116	.0313	.7510	.4708	.1905	.9102	.6299	.3497	.0694	.7891
429935	48.1527	49.8725	51.5922	53.3119	55.0317	56.7514	58.4712	60.1909	61.9106	63.6304	65.3501	67.0699	68.7896
938	.1531	.8728	.5926	.3123	.0321	.7518	.4716	.1913	.9111	.6308	.3506	.0703	.7901
941	.1534	.8732	.5929	.3127	.0324	.7522	.4720	.1917	.9115	.6313	.3510	.0708	.7906
944	.1537	.8735	.5933	.3131	.0328	.7526	.4724	.1922	.9119	.6317	.3515	.0713	.7910
947	.1541	.8739	.5936	.3134	.0332	.7530	.4728	.1926	.9124	.6322	.3519	.0717	.7915
429950	48.1544	49.8742	51.5940	53.3138	55.0336	56.7534	58.4732	60.1930	61.9128	63.6326	65.3524	67.0722	68.7920
953	.1547	.8745	.5944	.3142	.0340	.7538	.4736	.1934	.9132	.6330	.3529	.0727	.7925
956	.1551	.8749	.5947	.3145	.0344	.7542	.4740	.1938	.9137	.6335	.3533	.0731	.7930
959	.1554	.8752	.5951	.3149	.0348	.7546	.4744	.1943	.9141	.6339	.3538	.0736	.7934
962	.1557	.8756	.5954	.3153	.0351	.7550	.4748	.1947	.9145	.6344	.3542	.0741	.7939
429965	48.1561	49.8759	51.5958	53.3157	55.0355	56.7554	58.4752	60.1951	61.9150	63.6348	65.3547	67.0745	68.7944
968	.1564	.8763	.5962	.3160	.0359	.7558	.4756	.1955	.9154	.6353	.3551	.0750	.7949
971	.1568	.8766	.5965	.3164	.0363	.7562	.4761	.1959	.9158	.6357	.3556	.0755	.7954
974	.1571	.8770	.5969	.3168	.0367	.7566	.4765	.1964	.9163	.6362	.3560	.0759	.7958
977	.1574	.8773	.5972	.3171	.0371	.7570	.4769	.1968	.9167	.6366	.3565	.0764	.7963
429980	48.1578	49.8777	51.5976	53.3175	55.0374	56.7574	58.4773	60.1972	61.9171	63.6370	65.3570	67.0769	68.7968
983	.1581	.8780	.5980	.3179	.0378	.7578	.4777	.1976	.9176	.6375	.3574	.0773	.7973
986	.1584	.8784	.5983	.3183	.0382	.7582	.4781	.1980	.9180	.6379	.3579	.0778	.7978
989	.1588	.8787	.5987	.3186	.0386	.7585	.4785	.1985	.9184	.6384	.3583	.0783	.7982
992	.1591	.8791	.5990	.3190	.0390	.7589	.4789	.1989	.9188	.6388	.3588	.0788	.7987
429995	48.1594	49.8794	51.5994	53.3194	55.0394	56.7593	58.4793	60.1993	61.9193	63.6393	65.3592	67.0792	68.7992
998	.1598	.8798	.5998	.3198	.0397	.7597	.4797	.1997	.9197	.6397	.3597	.0797	.7997
430001	.1601	.8801	.6001	.3201	.0401	.7601	.4801	.2001	.9201	.6401	.3602	.0802	.8002
004	.1604	.8805	.6005	.3205	.0405	.7605	.4805	.2006	.9206	.6406	.3606	.0806	.8006
007	.1608	.8808	.6008	.3209	.0409	.7609	.4810	.2010	.9210	.6410	.3611	.0811	.8011
430010	48.1611	49.8812	51.6012	53.3212	55.0413	56.7613	58.4814	60.2014	61.9214	63.6415	65.3615	67.0816	68.8016
013	.1615	.8815	.6016	.3216	.0417	.7617	.4818	.2018	.9219	.6419	.3620	.0820	.8021
016	.1618	.8819	.6019	.3220	.0420	.7621	.4822	.2022	.9223	.6424	.3624	.0825	.8026
019	.1621	.8822	.6023	.3224	.0424	.7625	.4826	.2027	.9227	.6428	.3629	.0830	.8030
022	.1625	.8826	.6026	.3227	.0428	.7629	.4830	.2031	.9232	.6433	.3633	.0834	.8035
430025	48.1628	49.8829	51.6030	53.3231	55.0432	56.7633	58.4834	60.2035	61.9236	63.6437	65.3638	67.0839	68.8040
028	.1631	.8832	.6034	.3235	.0436	.7637	.4838	.2039	.9240	.6441	.3643	.0844	.8045
031	.1635	.8836	.6037	.3238	.0440	.7641	.4842	.2043	.9245	.6446	.3647	.0848	.8050
034	.1638	.8839	.6041	.3242	.0444	.7645	.4846	.2048	.9249	.6450	.3652	.0853	.8054
037	.1641	.8843	.6044	.3246	.0447	.7649	.4850	.2052	.9253	.6455	.3656	.0858	.8059
430040	48.1645	49.8846	51.6048	53.3250	55.0451	56.7653	58.4854	60.2056	61.9258	63.6459	65.3661	67.0862	68.8064
043	.1648	.8850	.6052	.3253	.0455	.7657	.4858	.2060	.9262	.6464	.3665	.0867	.8069
046	.1652	.8853	.6055	.3257	.0459	.7661	.4863	.2064	.9266	.6468	.3670	.0872	.8074
049	.1655	.8857	.6059	.3261	.0463	.7665	.4867	.2069	.9271	.6473	.3674	.0876	.8078
052	.1658	.8860	.6062	.3264	.0467	.7669	.4871	.2073	.9275	.6477	.3679	.0881	.8083
430055	48.1662	49.8864	51.6066	53.3268	55.0470	56.7673	58.4875	60.2077	61.9279	63.6481	65.3684	67.0886	68.8088
058	.1665	.8867	.6070	.3272	.0474	.7677	.4879	.2081	.9284	.6486	.3688	.0890	.8093
061	.1668	.8871	.6073	.3276	.0478	.7681	.4883	.2085	.9288	.6490	.3693	.0895	.8098
064	.1672	.8874	.6077	.3279	.0482	.7684	.4887	.2090	.9292	.6495	.3697	.0900	.8102
067	.1675	.8878	.6080	.3283	.0486	.7688	.4891	.2094	.9296	.6499	.3702	.0905	.8107
430070	48.1678	49.8881	51.6084	53.3287	55.0490	56.7692	58.4895	60.2098	61.9301	63.6504	65.3706	67.0909	68.8112
073	.1682	.8885	.6088	.3291	.0493	.7696	.4899	.2102	.9305	.6508	.3711	.0914	.8117
076	.1685	.8888	.6091	.3294	.0497	.7700	.4903	.2106	.9309	.6512	.3716	.0919	.8122
079	.1688	.8892	.6095	.3298	.0501	.7704	.4907	.2111	.9314	.6517	.3720	.0923	.8126
082	.1692	.8895	.6098	.3302	.0505	.7708	.4912	.2115	.9318	.6521	.3725	.0928	.8131
430085	48.1695	49.8899	51.6102	53.3305	55.0509	56.7712	58.4916	60.2119	61.9322	63.6526	65.3729	67.0933	68.8136
088	.1699	.8902	.6106	.3309	.0513	.7716	.4920	.2123	.9327	.6530	.3734	.0937	.8141
091	.1702	.8906	.6109	.3313	.0516	.7720	.4924	.2127	.9331	.6535	.3738	.0942	.8146
094	.1705	.8909	.6113	.3317	.0520	.7724	.4928	.2132	.9335	.6539	.3743	.0947	.8150
097	.1709	.8913	.6116	.3320	.0524	.7728	.4932	.2136	.9340	.6544	.3747	.0951	.8155
430100	48.1712	49.8916	51.6120	53.3324	55.0528	56.7732	58.4936	60.2140	61.9344	63.6548	65.3752	67.0956	68.8160

MEGACYCLES PER SECOND

H A R M O N I C S

BASIC FREQ.	164	168	172	176	180	184	188	192	200	208	216	224	232
429800	70.4872	72.2064	73.9256	75.6448	77.3640	79.0832	80.8024	82.5216	85.9600	89.3984	92.8368	96.2752	99.7136
803	.4877	.2069	.9261	.6453	.3645	.0838	.8030	.5222	.9606	.3990	.8374	.2759	.7143
806	.4882	.2074	.9266	.6459	.3651	.0843	.8035	.5228	.9612	.3996	.8381	.2765	.7150
809	.4887	.2079	.9271	.6464	.3656	.0849	.8041	.5233	.9618	.4003	.8387	.2772	.7157
812	.4892	.2084	.9277	.6469	.3662	.0854	.8047	.5239	.9624	.4009	.8394	.2779	.7164
429815	70.4897	72.2089	73.9282	75.6474	77.3667	79.0860	80.8052	82.5245	85.9630	89.4015	92.8400	96.2786	99.7171
818	.4902	.2094	.9287	.6480	.3672	.0865	.8058	.5251	.9636	.4021	.8407	.2792	.7178
821	.4906	.2099	.9292	.6485	.3678	.0871	.8063	.5256	.9642	.4028	.8413	.2799	.7185
824	.4911	.2104	.9297	.6490	.3683	.0876	.8069	.5262	.9648	.4034	.8420	.2806	.7192
827	.4916	.2109	.9302	.6496	.3689	.0882	.8075	.5268	.9654	.4040	.8426	.2812	.7199
429830	70.4921	72.2114	73.9308	75.6501	77.3694	79.0887	80.8080	82.5274	85.9660	89.4046	92.8433	96.2819	99.7206
833	.4926	.2119	.9313	.6506	.3699	.0893	.8086	.5279	.9666	.4053	.8439	.2826	.7213
836	.4931	.2124	.9318	.6511	.3705	.0898	.8092	.5285	.9672	.4059	.8446	.2833	.7220
839	.4936	.2130	.9323	.6517	.3710	.0904	.8097	.5291	.9678	.4065	.8452	.2839	.7226
842	.4941	.2135	.9328	.6522	.3716	.0909	.8103	.5297	.9684	.4071	.8459	.2846	.7233
429845	70.4946	72.2140	73.9333	75.6527	77.3721	79.0915	80.8109	82.5302	85.9690	89.4078	92.8465	96.2853	99.7240
848	.4951	.2145	.9339	.6532	.3726	.0920	.8114	.5308	.9696	.4084	.8472	.2860	.7247
851	.4956	.2150	.9344	.6538	.3732	.0926	.8120	.5314	.9702	.4090	.8478	.2866	.7254
854	.4961	.2155	.9349	.6543	.3737	.0931	.8126	.5320	.9708	.4096	.8485	.2873	.7261
857	.4965	.2160	.9354	.6548	.3743	.0937	.8131	.5325	.9714	.4103	.8491	.2880	.7268
429860	70.4970	72.2165	73.9359	75.6554	77.3748	79.0942	80.8137	82.5331	85.9720	89.4109	92.8498	96.2886	99.7275
863	.4975	.2170	.9364	.6559	.3753	.0948	.8142	.5337	.9726	.4115	.8504	.2893	.7282
866	.4980	.2175	.9370	.6564	.3759	.0953	.8148	.5343	.9732	.4121	.8511	.2900	.7289
869	.4985	.2180	.9375	.6569	.3764	.0959	.8154	.5348	.9738	.4128	.8517	.2907	.7296
872	.4990	.2185	.9380	.6575	.3770	.0964	.8159	.5354	.9744	.4134	.8524	.2913	.7303
429875	70.4995	72.2190	73.9385	75.6580	77.3775	79.0970	80.8165	82.5360	85.9750	89.4140	92.8530	96.2920	99.7310
878	.5000	.2195	.9390	.6585	.3780	.0976	.8171	.5366	.9756	.4146	.8536	.2927	.7317
881	.5005	.2200	.9395	.6591	.3786	.0981	.8176	.5372	.9762	.4152	.8543	.2933	.7324
884	.5010	.2205	.9400	.6596	.3791	.0987	.8182	.5377	.9768	.4159	.8549	.2940	.7331
887	.5015	.2210	.9406	.6601	.3797	.0992	.8188	.5383	.9774	.4165	.8556	.2947	.7338
429890	70.5020	72.2215	73.9411	75.6606	77.3802	79.0998	80.8193	82.5389	85.9780	89.4171	92.8562	96.2954	99.7345
893	.5025	.2220	.9416	.6612	.3807	.1003	.8199	.5395	.9786	.4177	.8569	.2960	.7352
896	.5029	.2225	.9421	.6617	.3813	.1009	.8204	.5400	.9792	.4184	.8575	.2967	.7359
899	.5034	.2230	.9426	.6622	.3818	.1014	.8210	.5406	.9798	.4190	.8582	.2974	.7366
902	.5039	.2235	.9431	.6628	.3824	.1020	.8216	.5412	.9804	.4196	.8588	.2980	.7373
429905	70.5044	72.2240	73.9437	75.6633	77.3829	79.1025	80.8221	82.5418	85.9810	89.4202	92.8595	96.2987	99.7380
908	.5049	.2245	.9442	.6638	.3834	.1031	.8227	.5423	.9816	.4209	.8601	.2994	.7387
911	.5054	.2250	.9447	.6643	.3840	.1036	.8233	.5429	.9822	.4215	.8608	.3001	.7394
914	.5059	.2256	.9452	.6649	.3845	.1042	.8238	.5435	.9828	.4221	.8614	.3007	.7400
917	.5064	.2261	.9457	.6654	.3851	.1047	.8244	.5441	.9834	.4227	.8621	.3014	.7407
429920	70.5069	72.2266	73.9462	75.6659	77.3856	79.1053	80.8250	82.5446	85.9840	89.4234	92.8627	96.3021	99.7414
923	.5074	.2271	.9468	.6664	.3861	.1058	.8255	.5452	.9846	.4240	.8634	.3028	.7421
926	.5079	.2276	.9473	.6670	.3867	.1064	.8261	.5458	.9852	.4246	.8640	.3034	.7428
929	.5084	.2281	.9478	.6675	.3872	.1069	.8267	.5464	.9858	.4252	.8647	.3041	.7435
932	.5088	.2286	.9483	.6680	.3878	.1075	.8272	.5469	.9864	.4259	.8653	.3048	.7442
429935	70.5093	72.2291	73.9488	75.6686	77.3883	79.1080	80.8278	82.5475	85.9870	89.4265	92.8660	96.3054	99.7449
938	.5098	.2296	.9493	.6691	.3888	.1086	.8283	.5481	.9876	.4271	.8666	.3061	.7456
941	.5103	.2301	.9499	.6696	.3894	.1091	.8289	.5487	.9882	.4277	.8673	.3068	.7463
944	.5108	.2306	.9504	.6701	.3899	.1097	.8295	.5492	.9888	.4284	.8679	.3075	.7470
947	.5113	.2311	.9509	.6707	.3905	.1102	.8300	.5498	.9894	.4290	.8686	.3081	.7477
429950	70.5118	72.2316	73.9514	75.6712	77.3910	79.1108	80.8306	82.5504	85.9900	89.4296	92.8692	96.3088	99.7484
953	.5123	.2321	.9519	.6717	.3915	.1114	.8312	.5510	.9906	.4302	.8698	.3095	.7491
956	.5128	.2326	.9524	.6723	.3921	.1119	.8317	.5516	.9912	.4308	.8705	.3101	.7498
959	.5133	.2331	.9529	.6728	.3926	.1125	.8323	.5521	.9918	.4315	.8711	.3108	.7505
962	.5138	.2336	.9535	.6733	.3932	.1130	.8329	.5527	.9924	.4321	.8718	.3115	.7512
429965	70.5143	72.2341	73.9540	75.6738	77.3937	79.1136	80.8334	82.5533	85.9930	89.4327	92.8724	96.3122	99.7519
968	.5148	.2346	.9545	.6744	.3942	.1141	.8340	.5539	.9936	.4333	.8731	.3128	.7526
971	.5152	.2351	.9550	.6749	.3948	.1147	.8345	.5544	.9942	.4340	.8737	.3135	.7533
974	.5157	.2356	.9555	.6754	.3953	.1152	.8351	.5550	.9948	.4346	.8744	.3142	.7540
977	.5162	.2361	.9560	.6760	.3959	.1158	.8357	.5556	.9954	.4352	.8750	.3148	.7547
429980	70.5167	72.2366	73.9566	75.6765	77.3964	79.1163	80.8362	82.5562	85.9960	89.4358	92.8757	96.3155	99.7554
983	.5172	.2371	.9571	.6770	.3969	.1169	.8368	.5567	.9966	.4365	.8763	.3162	.7561
986	.5177	.2376	.9576	.6775	.3975	.1174	.8374	.5573	.9972	.4371	.8770	.3169	.7568
989	.5182	.2382	.9581	.6781	.3980	.1180	.8379	.5579	.9978	.4377	.8776	.3175	.7574
992	.5187	.2387	.9586	.6786	.3986	.1185	.8385	.5585	.9984	.4383	.8783	.3182	.7581
429995	70.5192	72.2392	73.9591	75.6791	77.3991	79.1191	80.8391	82.5590	85.9990	89.4390	92.8789	96.3189	99.7588
998	.5197	.2397	.9597	.6796	.3996	.1196	.8396	.5596	.9996	.4396	.8796	.3196	.7595
430001	.5202	.2402	.9602	.6802	.4002	.1202	.8402	.5602	86.0002	.4402	.8802	.3202	.7602
004	.5207	.2407	.9607	.6807	.4007	.1207	.8408	.5608	.0008	.4408	.8809	.3209	.7609
007	.5211	.2412	.9612	.6812	.4013	.1213	.8413	.5613	.0014	.4415	.8815	.3216	.7616
430010	70.5216	72.2417	73.9617	75.6818	77.4018	79.1218	80.8419	82.5619	86.0020	89.4421	92.8822	96.3222	99.7623
013	.5221	.2422	.9622	.6823	.4023	.1224	.8424	.5625	.0026	.4427	.8828	.3229	.7630
016	.5226	.2427	.9628	.6828	.4029	.1229	.8430	.5631	.0032	.4433	.8835	.3236	.7637
019	.5231	.2432	.9633	.6833	.4034	.1235	.8436	.5636	.0038	.4440	.8841	.3243	.7644
022	.5236	.2437	.9638	.6839	.4040	.1240	.8441	.5642	.0044	.4446	.8848	.3249	.7651
430025	70.5241	72.2442	73.9643	75.6844	77.4045	79.1246	80.8447	82.5648	86.0050	89.4452	92.8854	96.3256	99.7658
028	.5246	.2447	.9648	.6849	.4050	.1252	.8453	.5654	.0056	.4458	.8860	.3263	.7665
031	.5251	.2452	.9653	.6855	.4056	.1257	.8458	.5660	.0062	.4464	.8867	.3269	.7672
034	.5256	.2457	.9658	.6860	.4061	.1263	.8464	.5665	.0068	.4471	.8873	.3276	.7679
037	.5261	.2462	.9664	.6865	.4067	.1268	.8470	.5671	.0074	.4477	.8880	.3283	.7686
430040	70.5266	72.2467	73.9669	75.6870	77.4072	79.1274	80.8475	82.5677	86.0080	89.4483	92.8886	96.3290	99.7693
043	.5271	.2472	.9674	.6876	.4077	.1279	.8481	.5683	.0086	.4489	.8893	.3296	.7700
046	.5275	.2477	.9679	.6881	.4083	.1285	.8486	.5688	.0092	.4496	.8899	.3303	.7707
049	.5280	.2482	.9684	.6886	.4088	.1290	.8492	.5694	.0098	.4502	.8906	.3310	.7714
052	.5285	.2487	.9689	.6892	.4094	.1296	.8498	.5700	.0104	.4508	.8912	.3316	.7721
430055	70.5290	72.2492	73.9695	75.6897	77.4099	79.1301	80.8503	82.5706	86.0110	89.4514	92.8919	96.3323	99.7728
058	.5295	.2497	.9700	.6902	.4104	.1307	.8509	.5711	.0116	.4521	.8925	.3330	.7735
061	.5300	.2502	.9705	.6907	.4110	.1312	.8515	.5717	.0122	.4527	.8932	.3337	.7742
064	.5305	.2508	.9710	.6913	.4115	.1318	.8520	.5723	.0128	.4533	.8938	.3343	.7748
067	.5310	.2513	.9715	.6918	.4121	.1323	.8526	.5729	.0134	.4539	.8945	.3350	.7755
430070	70.5315	72.2518	73.9720	75.6923	77.4126	79.1329	80.8532	82.5734	86.0140	89.4546	92.8951	96.3357	99.7762
073	.5320	.2523	.9726	.6928	.4131	.1334	.8537	.5740	.0146	.4552	.8958	.3364	.7769
076	.5325	.2528	.9731	.6934	.4137	.1340	.8543	.5746	.0152	.4558	.8964	.3370	.7776
079	.5330	.2533	.9736	.6939	.4142	.1345	.8549	.5752	.0158	.4564	.8971	.3377	.7783
082	.5334	.2538	.9741	.6944	.4148	.1351	.8554	.5757	.0164	.4571	.8977	.3384	.7790
430085	70.5339	72.2543	73.9746	75.6950	77.4153	79.1356	80.8560	82.5763	86.0170	89.4577	92.8984	96.3390	99.7797
088	.5344	.2548	.9751	.6955	.4158	.1362	.8565	.5769	.0176	.4583	.8990	.3397	.7804
091	.5349	.2553	.9757	.6960	.4164	.1367	.8571	.5775	.0182	.4589	.8997	.3404	.7811
094	.5354	.2558	.9762	.6965	.4169	.1373	.8577	.5780	.0188	.4596	.9003	.3411	.7818
097	.5359	.2563	.9767	.6971	.4175	.1378	.8582	.5786	.0194	.4602	.9010	.3417	.7825
430100	70.5364	72.2568	73.9772	75.6976	77.4180	79.1384	80.8588	82.5792	86.0200	89.4608	92.9016	96.3424	99.7832

H A R M O N I C S

BASIC FREQ.	112	116	120	124	128	132	136	140	144	148	152	156	160
430100	48.1712	49.8916	51.6120	53.3324	55.0528	56.7732	58.4936	60.2140	61.9344	63.6548	65.3752	67.0956	68.8160
103	.1715	.8919	.6124	.3328	.0532	.7736	.4940	.2144	.9348	.6552	.3757	.0961	.8165
106	.1719	.8923	.6127	.3331	.0536	.7740	.4944	.2148	.9353	.6557	.3761	.0965	.8170
109	.1722	.8926	.6131	.3335	.0540	.7744	.4948	.2153	.9357	.6561	.3766	.0970	.8174
112	.1725	.8930	.6134	.3339	.0543	.7748	.4952	.2157	.9361	.6566	.3770	.0975	.8179
430115	48.1729	49.8933	51.6138	53.3343	55.0547	56.7752	58.4956	60.2161	61.9366	63.7570	65.3775	67.0979	68.8184
118	.1732	.8937	.6142	.3346	.0551	.7756	.4960	.2165	.9370	.6575	.3779	.0984	.8189
121	.1736	.8940	.6145	.3350	.0555	.7760	.4965	.2169	.9374	.6579	.3784	.0989	.8194
124	.1739	.8944	.6149	.3354	.0559	.7764	.4969	.2174	.9379	.6584	.3788	.0993	.8198
127	.1742	.8947	.6152	.3357	.0563	.7768	.4973	.2178	.9383	.6588	.3793	.0998	.8203
430130	48.1746	49.8951	51.6156	53.3361	55.0566	56.7772	58.4977	60.2182	61.9387	63.6592	65.3798	67.1003	68.8208
133	.1749	.8954	.6160	.3365	.0570	.7776	.4981	.2186	.9392	.6597	.3802	.1007	.8213
136	.1752	.8958	.6163	.3369	.0574	.7780	.4985	.2190	.9396	.6601	.3807	.1012	.8218
139	.1756	.8961	.6167	.3372	.0578	.7783	.4989	.2195	.9400	.6606	.3811	.1017	.8222
142	.1759	.8965	.6170	.3376	.0582	.7787	.4993	.2199	.9404	.6610	.3816	.1022	.8227
430145	48.1762	49.8968	51.6174	53.3380	55.0586	56.7791	58.4997	60.2203	61.9409	63.6615	65.3820	67.1026	68.8232
148	.1766	.8972	.6178	.3384	.0589	.7795	.5001	.2207	.9413	.6619	.3825	.1031	.8237
151	.1769	.8975	.6181	.3387	.0593	.7799	.5005	.2211	.9417	.6623	.3830	.1036	.8242
154	.1772	.8979	.6185	.3391	.0597	.7803	.5009	.2216	.9422	.6628	.3834	.1040	.8246
157	.1776	.8982	.6188	.3395	.0601	.7807	.5014	.2220	.9426	.6632	.3839	.1045	.8251
430160	48.1779	49.8986	51.6192	53.3398	55.0605	56.7811	58.5018	60.2224	61.9430	63.6637	65.3843	67.1050	68.8256
163	.1783	.8989	.6196	.3402	.0609	.7815	.5022	.2228	.9435	.6641	.3848	.1054	.8261
166	.1786	.8993	.6199	.3406	.0612	.7819	.5026	.2232	.9439	.6646	.3852	.1059	.8266
169	.1789	.8996	.6203	.3410	.0616	.7823	.5030	.2237	.9443	.6650	.3857	.1064	.8270
172	.1793	.9000	.6206	.3413	.0620	.7827	.5034	.2241	.9448	.6655	.3861	.1068	.8275
430175	48.1796	49.9003	51.6210	53.3417	55.0624	56.7831	58.5038	60.2245	61.9452	63.6659	65.3866	67.1073	68.8280
178	.1799	.9006	.6214	.3421	.0628	.7835	.5042	.2249	.9456	.6663	.3871	.1078	.8285
181	.1803	.9010	.6217	.3424	.0632	.7839	.5046	.2253	.9461	.6668	.3875	.1082	.8290
184	.1806	.9013	.6221	.3428	.0636	.7843	.5050	.2258	.9465	.6672	.3880	.1087	.8294
187	.1809	.9017	.6224	.3432	.0639	.7847	.5054	.2262	.9469	.6677	.3884	.1092	.8299
430190	48.1813	49.9020	51.6228	53.3436	55.0643	56.7851	58.5058	60.2266	61.9474	63.6681	65.3889	67.1096	68.8304
193	.1816	.9024	.6232	.3439	.0647	.7855	.5062	.2270	.9478	.6686	.3893	.1101	.8309
196	.1820	.9027	.6235	.3443	.0651	.7859	.5067	.2274	.9482	.6690	.3898	.1106	.8314
199	.1823	.9031	.6239	.3447	.0655	.7863	.5071	.2279	.9487	.6695	.3902	.1110	.8318
202	.1826	.9034	.6242	.3450	.0659	.7867	.5075	.2283	.9491	.6699	.3907	.1115	.8323
430205	48.1830	49.9038	51.6246	53.3454	55.0662	56.7871	58.5079	60.2287	61.9495	63.6703	65.3912	67.1120	68.8328
208	.1833	.9041	.6250	.3458	.0666	.7875	.5083	.2291	.9500	.6708	.3916	.1124	.8333
211	.1836	.9045	.6253	.3462	.0670	.7879	.5087	.2295	.9504	.6712	.3921	.1129	.8338
214	.1840	.9048	.6257	.3465	.0674	.7882	.5091	.2300	.9508	.6717	.3925	.1134	.8342
217	.1843	.9052	.6260	.3469	.0678	.7886	.5095	.2304	.9512	.6721	.3930	.1139	.8347
420220	48.1846	49.9055	51.6264	53.3473	55.0682	56.7890	58.5099	60.2308	61.9517	63.6726	65.3934	67.1143	68.8352
223	.1850	.9059	.6268	.3477	.0685	.7894	.5103	.2312	.9521	.6730	.3939	.1148	.8357
226	.1853	.9062	.6271	.3480	.0689	.7898	.5107	.2316	.9525	.6734	.3944	.1153	.8362
229	.1856	.9066	.6275	.3484	.0693	.7902	.5111	.2321	.9530	.6739	.3948	.1157	.8366
232	.1860	.9069	.6278	.3488	.0697	.7906	.5116	.2325	.9534	.6743	.3953	.1162	.8371
430235	48.1863	49.9073	51.6282	53.3491	55.0701	56.7910	58.5120	60.2329	61.9538	63.6748	65.3957	67.1167	68.8376
238	.1867	.9076	.6286	.3495	.0705	.7914	.5124	.2333	.9543	.6752	.3962	.1171	.8381
241	.1870	.9080	.6289	.3499	.0708	.7918	.5128	.2337	.9547	.6757	.3966	.1176	.8386
244	.1873	.9083	.6293	.3503	.0712	.7922	.5132	.2342	.9551	.6761	.3971	.1181	.8390
247	.1877	.9087	.6296	.3506	.0716	.7926	.5136	.2346	.9556	.6766	.3975	.1185	.8395
430250	48.1880	49.9090	51.6300	53.3510	55.0720	56.7930	58.5140	60.2350	61.9560	63.6770	65.3980	67.1190	68.8400
253	.1883	.9093	.6304	.3514	.0724	.7934	.5144	.2354	.9564	.6774	.3985	.1195	.8405
256	.1887	.9097	.6307	.3517	.0728	.7938	.5148	.2358	.9569	.6779	.3989	.1199	.8410
259	.1890	.9100	.6311	.3521	.0732	.7942	.5152	.2363	.9573	.6783	.3994	.1204	.8414
262	.1893	.9104	.6314	.3525	.0735	.7946	.5156	.2367	.9577	.6788	.3998	.1209	.8419
430265	48.1897	49.9107	51.6318	53.3529	55.0739	56.7950	58.5160	60.2371	61.9582	63.6792	65.4003	67.1213	68.8424
268	.1900	.9111	.6322	.3532	.0743	.7954	.5164	.2375	.9586	.6797	.4007	.1218	.8429
271	.1904	.9114	.6325	.3536	.0747	.7958	.5169	.2379	.9590	.6801	.4012	.1223	.8434
274	.1907	.9118	.6329	.3540	.0751	.7962	.5173	.2384	.9595	.6806	.4016	.1227	.8438
277	.1910	.9121	.6332	.3543	.0755	.7966	.5177	.2388	.9599	.6810	.4021	.1232	.8443
430280	48.1914	49.9125	51.6336	53.3547	55.0758	56.7970	58.5181	60.2392	61.9603	63.6814	65.4026	67.1237	68.8448
283	.1917	.9128	.6340	.3551	.0762	.7974	.5185	.2396	.9608	.6819	.4030	.1241	.8453
286	.1920	.9132	.6343	.3555	.0766	.7978	.5189	.2400	.9612	.6823	.4035	.1246	.8458
289	.1924	.9135	.6347	.3558	.0770	.7981	.5193	.2405	.9616	.6828	.4039	.1251	.8462
292	.1927	.9139	.6350	.3562	.0774	.7985	.5197	.2409	.9620	.6832	.4044	.1256	.8467
430295	48.1930	49.9142	51.6354	53.3566	55.0778	56.7989	58.5201	60.2413	61.9625	63.6837	65.4048	67.1260	68.8472
298	.1934	.9146	.6358	.3570	.0781	.7993	.5205	.2417	.9629	.6841	.4053	.1265	.8477
301	.1937	.9149	.6361	.3573	.0785	.7997	.5209	.2421	.9633	.6845	.4058	.1270	.8482
304	.1940	.9153	.6365	.3577	.0789	.8001	.5213	.2426	.9638	.6850	.4062	.1274	.8486
307	.1944	.9156	.6368	.3581	.0793	.8005	.5218	.2430	.9642	.6854	.4067	.1279	.8491
430310	48.1947	49.9160	51.6372	53.3584	55.0797	56.8009	58.5222	60.2434	61.9646	63.6859	65.4071	67.1284	68.8496
313	.1951	.9163	.6376	.3588	.0801	.8013	.5226	.2438	.9651	.6863	.4076	.1288	.8501
316	.1954	.9167	.6379	.3592	.0804	.8017	.5230	.2442	.9655	.6868	.4080	.1293	.8506
319	.1957	.9170	.6383	.3596	.0808	.8021	.5234	.2447	.9659	.6872	.4085	.1298	.8510
322	.1961	.9174	.6386	.3599	.0812	.8025	.5238	.2451	.9664	.6877	.4089	.1302	.8515
430325	48.1964	49.9177	51.6390	53.3603	55.0816	56.8029	58.5242	60.2455	61.9668	63.6881	65.4094	67.1307	68.8520
328	.1967	.9180	.6394	.3607	.0820	.8033	.5246	.2459	.9672	.6885	.4099	.1312	.8525
331	.1971	.9184	.6397	.3610	.0824	.8037	.5250	.2463	.9677	.6890	.4103	.1316	.8530
334	.1974	.9187	.6401	.3614	.0828	.8041	.5254	.2468	.9681	.6894	.4108	.1321	.8534
337	.1977	.9191	.6404	.3618	.0831	.8045	.5258	.2472	.9685	.6899	.4112	.1326	.8539
430340	48.1981	49.9194	51.6408	53.3622	55.0835	56.8049	58.5262	60.2476	61.9690	63.6903	65.4117	67.1330	68.8544
343	.1984	.9198	.6412	.3625	.0839	.8053	.5266	.2480	.9694	.6908	.4121	.1335	.8549
346	.1988	.9201	.6415	.3629	.0843	.8057	.5271	.2484	.9698	.6912	.4126	.1340	.8554
349	.1991	.9205	.6419	.3633	.0847	.8061	.5275	.2489	.9703	.6917	.4130	.1344	.8558
352	.1994	.9208	.6422	.3636	.0851	.8065	.5279	.2493	.9707	.6921	.4135	.1349	.8563
430355	48.1998	49.9212	51.6426	53.3640	55.0854	56.8069	58.5283	60.2497	61.9711	63.6925	65.4140	67.1354	68.8568
358	.2001	.9215	.6430	.3644	.0858	.8073	.5287	.2501	.9716	.6930	.4144	.1358	.8573
361	.2004	.9219	.6433	.3648	.0862	.8077	.5291	.2505	.9720	.6934	.4149	.1363	.8578
364	.2008	.9222	.6437	.3651	.0866	.8080	.5295	.2510	.9724	.6939	.4153	.1368	.8582
367	.2011	.9226	.6440	.3655	.0870	.8084	.5299	.2514	.9728	.6943	.4158	.1373	.8587
430370	48.2014	49.9229	51.6444	53.3659	55.0874	56.8088	58.5303	60.2518	61.9733	63.6948	65.4162	67.1377	68.8592
373	.2018	.9233	.6448	.3663	.0877	.8092	.5307	.2522	.9737	.6952	.4167	.1382	.8597
376	.2021	.9236	.6451	.3666	.0881	.8096	.5311	.2526	.9741	.6956	.4172	.1387	.8602
379	.2024	.9240	.6455	.3670	.0885	.8100	.5315	.2531	.9746	.6961	.4176	.1391	.8606
382	.2028	.9243	.6458	.3674	.0889	.8104	.5320	.2535	.9750	.6965	.4181	.1396	.8611
430385	48.2031	49.9247	51.6462	53.3677	55.0893	56.8108	58.5324	60.2539	61.9754	63.6970	65.4185	67.1401	68.8616
388	.2035	.9250	.6466	.3681	.0897	.8112	.5328	.2543	.9759	.6974	.4190	.1405	.8621
391	.2038	.9254	.6469	.3685	.0900	.8116	.5332	.2547	.9763	.6979	.4194	.1410	.8626
394	.2041	.9257	.6473	.3689	.0904	.8120	.5336	.2552	.9767	.6983	.4199	.1415	.8630
397	.2045	.9261	.6476	.3692	.0908	.8124	.5340	.2556	.9772	.6988	.4203	.1419	.8635
430400	48.2048	49.9264	51.6480	53.3696	55.0912	56.8128	58.5344	60.2560	61.9776	63.6992	65.4208	67.1424	68.8640

MEGACYCLES PER SECOND

H A R M O N I C S

BASIC FREQ.	164	168	172	176	180	184	188	192	200	208	216	224	232
430100	70.5364	72.2568	73.9772	75.6976	77.4180	79.1384	80.8588	82.5792	86.0200	89.4608	92.9016	96.3424	99.7832
103	.5369	.2573	.9777	.6981	.4185	.1390	.8594	.5798	.0206	.4614	.9022	.3431	.7839
106	.5374	.2578	.9782	.6987	.4191	.1395	.8599	.5804	.0212	.4620	.9029	.3437	.7846
109	.5379	.2583	.9787	.6992	.4196	.1401	.8605	.5809	.0218	.4627	.9035	.3444	.7853
112	.5384	.2588	.9793	.6997	.4202	.1406	.8611	.5815	.0224	.4633	.9042	.3451	.7860
430115	70.5389	72.2593	73.9798	75.7002	77.4207	79.1412	80.8616	82.5821	86.0230	89.4639	92.9048	96.3458	99.7867
118	.5394	.2598	.9803	.7008	.4212	.1417	.8622	.5827	.0236	.4645	.9055	.3464	.7874
121	.5398	.2603	.9808	.7013	.4218	.1423	.8627	.5832	.0242	.4652	.9061	.3471	.7881
124	.5403	.2608	.9813	.7018	.4223	.1428	.8633	.5838	.0248	.4658	.9068	.3478	.7888
127	.5408	.2613	.9818	.7024	.4229	.1434	.8639	.5844	.0254	.4664	.9074	.3484	.7895
430130	70.5413	72.2618	73.9824	75.7029	77.4234	79.1439	80.8644	82.5850	86.0260	89.4670	92.9081	96.3491	99.7902
133	.5418	.2623	.9829	.7034	.4239	.1445	.8650	.5855	.0266	.4677	.9087	.3498	.7909
136	.5423	.2628	.9834	.7039	.4245	.1450	.8656	.5861	.0272	.4683	.9094	.3505	.7916
139	.5428	.2634	.9839	.7045	.4250	.1456	.8661	.5867	.0278	.4689	.9100	.3511	.7922
142	.5433	.2639	.9844	.7050	.4256	.1461	.8667	.5873	.0284	.4695	.9107	.3518	.7929
430145	70.5438	72.2644	73.9849	75.7055	77.4261	79.1467	80.8673	82.5878	86.0290	89.4702	92.9113	96.3525	99.7936
148	.5443	.2649	.9855	.7060	.4266	.1472	.8678	.5884	.0296	.4708	.9120	.3532	.7943
151	.5448	.2654	.9860	.7066	.4272	.1478	.8684	.5890	.0302	.4714	.9126	.3538	.7950
154	.5453	.2659	.9865	.7071	.4277	.1483	.8690	.5896	.0308	.4720	.9133	.3545	.7957
157	.5457	.2664	.9870	.7076	.4283	.1489	.8695	.5901	.0314	.4727	.9139	.3552	.7964
430160	70.5462	72.2669	73.9875	75.7082	77.4288	79.1494	80.8701	82.5907	86.0320	89.4733	92.9146	96.3558	99.7971
163	.5467	.2674	.9880	.7087	.4293	.1500	.8706	.5913	.0326	.4739	.9152	.3565	.7978
166	.5472	.2679	.9886	.7092	.4299	.1505	.8712	.5919	.0332	.4745	.9159	.3572	.7985
169	.5477	.2684	.9891	.7097	.4304	.1511	.8718	.5924	.0338	.4752	.9165	.3579	.7992
172	.5482	.2689	.9896	.7103	.4310	.1516	.8723	.5930	.0344	.4758	.9172	.3585	.7999
430175	70.5487	72.2694	73.9901	75.7108	77.4315	79.1522	90.8729	82.5936	86.0350	89.4764	92.9178	96.3592	99.8006
178	.5492	.2699	.9906	.7113	.4320	.1528	.8735	.5942	.0356	.4770	.9184	.3599	.8013
181	.5497	.2704	.9911	.7119	.4326	.1533	.8740	.5948	.0362	.4776	.9191	.3605	.8020
184	.5502	.2709	.9916	.7124	.4331	.1539	.8746	.5953	.0368	.4783	.9197	.3612	.8027
187	.5507	.2714	.9922	.7129	.4337	.1544	.8752	.5959	.0374	.4789	.9204	.3619	.8034
430190	70.5512	72.2719	73.9927	75.7134	77.4342	79.1550	80.8757	82.5965	86.0380	89.4795	92.9210	96.3626	99.8041
193	.5517	.2724	.9932	.7140	.4347	.1555	.8763	.5971	.0386	.4801	.9217	.3632	.8048
196	.5521	.2729	.9937	.7145	.4353	.1561	.8768	.5976	.0392	.4808	.9223	.3639	.8055
199	.5526	.2734	.9942	.7150	.4358	.1566	.8774	5982	.0398	.4814	.9230	.3646	.8062
202	.5531	.2739	.9947	.7156	.4364	.1572	.8780	.5988	.0404	.4820	.9236	.3652	.8069
430205	70.5536	72.2744	73.9953	75.7161	77.4369	79.1577	80.8785	82.5994	86.0410	89.4826	92.9243	96.3659	99.8076
208	.5541	.2749	.9958	.7166	.4374	.1583	.8791	.5999	.0416	.4833	.9249	.3666	.8083
211	.5546	.2754	.9963	.7171	.4380	.1588	.8797	.6005	.0422	.4839	.9256	.3673	.8090
214	.5551	.2760	.9968	.7177	.4385	.1594	.8802	.6011	.0428	.4845	.9262	.3679	.8096
217	.5556	.2765	.9973	.7182	.4391	.1599	.8808	.6017	.0434	.4851	.9269	.3686	.8103
430220	70.5561	72.2770	73.9978	75.7187	77.4396	79.1605	80.8814	82.6022	86.0440	89.4858	92.9275	96.3693	99.8110
223	.5566	.2775	.9984	.7192	.4401	.1610	.8819	.6028	.0446	.4864	.9282	.3700	.8117
226	.5571	.2780	.9989	.7198	.4407	.1616	.8825	.6034	.0452	.4870	.9288	.3706	.8124
229	.5576	.2785	.9994	.7203	.4412	.1621	.8831	.6040	.0458	.4876	.9295	.3713	.8131
232	.5580	.2790	.9999	.7208	.4418	.1627	.8836	.6045	.0464	.4883	.9301	.3720	.8138
430235	70.5585	72.2795	74.0004	75.7214	77.4423	79.1632	80.8842	82.6051	86.0470	89.4889	92.9308	96.3726	99.8145
238	.5590	.2800	.0009	.7219	.4428	.1638	.8847	.6057	.0476	.4895	.9314	.3733	.8152
241	.5595	.2805	.0015	.7224	.4434	.1643	.8853	.6063	.0482	.4901	.9321	.3740	.8159
244	.5600	.2810	.0020	.7229	.4439	.1649	.8859	.6068	.0488	.4908	.9327	.3747	.8166
247	.5605	.2815	.0025	.7235	.4445	.1654	.8864	.6074	.0494	.4914	.9334	.3753	.8173
430250	70.5610	72.2820	74.0030	75.7240	77.4450	79.1660	80.8870	82.6080	86.0500	89.4920	92.9340	96.3760	99.8180
253	.5615	.2825	.0035	.7245	.4455	.1666	.8876	.6086	.0506	.4926	.9346	.3767	.8187
256	.5620	.2830	.0040	.7251	.4461	.1671	.8881	.6092	.0512	.4932	.9353	.3773	.8194
259	.5625	.2835	.0045	.7256	.4466	.1677	.8887	.6097	.0518	.4939	.9359	.3780	.8201
262	.5630	.2840	.0051	.7261	.4472	.1682	.8893	.6103	.0524	.4945	.9366	.3787	.8208
430265	70.5635	72.2845	74.0056	75.7266	77.4477	79.1688	80.8898	82.6109	86.0530	89.4951	92.9372	96.3794	99.8215
268	.5640	.2850	.0061	.7272	.4482	.1693	.8904	.6115	.0536	.4957	.9379	.3800	.8222
271	.5644	.2855	.0066	.7277	.4488	.1699	.8909	.6120	.0542	.4964	.9385	.3807	.8229
274	.5649	.2860	.0071	.7282	.4493	.1704	.8915	.6126	.0548	.4970	.9392	.3814	.8236
277	.5654	.2865	.0076	.7288	.4499	.1710	.8921	.6132	.0554	.4976	.9398	.3820	.8243
430280	70.5659	72.2870	74.0082	75.7293	77.4504	79.1715	80.8926	82.6138	86.0560	89.4982	92.9405	96.3827	99.8250
283	.5664	.2875	.0087	.7298	.4509	.1721	.8932	.6143	.0566	.4989	.9411	.3834	.8257
286	.5669	.2880	.0092	.7303	.4515	.1726	.8938	.6149	.0572	.4995	.9418	.3841	.8264
289	.5674	.2886	.0097	.7309	.4520	.1732	.8943	.6155	.0578	.5001	.9424	.3847	.8270
292	.5679	.2891	.0102	.7314	.4526	.1737	.8949	.6161	.0584	.5007	.9431	.3854	.8277
430295	70.5684	72.2896	74.0107	75.7319	77.4531	79.1743	80.8955	82.6166	86.0590	89.5014	92.9437	96.3861	99.8284
298	.5689	.2901	.0113	.7324	.4536	.1748	.8960	.6172	.0596	.5020	.9444	.3868	.8291
301	.5694	.2906	.0118	.7330	.4542	.1754	.8966	.6178	.0602	.5026	.9450	.3874	.8298
304	.5699	.2911	.0123	.7335	.4547	.1759	.8972	.6184	.0608	.5032	.9457	.3881	.8305
307	.5703	.2916	.0128	.7340	.4553	.1765	.8977	.6189	.0614	.5039	.9463	.3888	.8312
430310	70.5708	72.2921	74.0133	75.7346	77.4558	79.1770	80.8983	82.6195	86.0620	89.5045	92.9470	96.3894	99.8319
313	.5713	.2926	.0138	.7351	.4563	.1776	.8988	.6201	.0626	.5051	.9476	.3901	.8326
316	.5718	.2931	.0144	.7356	.4569	.1781	.8994	.6207	.0632	.5057	.9483	.3908	.8333
319	.5723	.2936	.0149	.7361	.4574	.1787	.9000	.6212	.0638	.5064	.9489	.3915	.8340
322	.5728	.2941	.0154	.7367	.4580	.1792	.9005	.6218	.0644	.5070	.9496	.3921	.8347
430325	70.5733	72.2946	74.0159	75.7372	77.4585	79.1798	80.9011	82.6224	86.0650	89.5076	92.9502	96.3928	99.8354
328	.5738	.2951	.0164	.7377	.4590	.1804	.9017	.6230	.0656	.5082	.9508	.3935	.8361
331	.5743	.2956	.0169	.7383	.4596	.1809	.9022	.6236	.0662	.5088	.9515	.3941	.8368
334	.5748	.2961	.0174	.7388	.4601	.1815	.9028	.6241	.0668	.5095	.9521	.3948	.8375
337	.5753	.2966	.0180	.7393	.4607	.1820	.9034	.6247	.0674	.5101	.9528	.3955	.8382
430340	70.5758	72.2971	74.0185	75.7398	77.4612	79.1826	80.9039	82.6253	86.0680	89.5107	92.9534	96.3962	99.8389
343	.5763	.2976	.0190	.7404	.4617	.1831	.9045	.6259	.0686	.5113	.9541	.3968	.8396
346	.5767	.2981	.0195	.7409	.4623	.1837	.9050	.6264	.0692	.5120	.9547	.3975	.8403
349	.5772	.2986	.0200	.7414	.4628	.1842	.9056	.6270	.0698	.5126	.9554	.3982	.8410
352	.5777	.2991	.0205	.7420	.4634	.1848	.9062	.6276	.0704	.5132	.9560	.3988	.8417
430355	70.5782	72.2996	74.0211	75.7425	77.4639	79.1853	80.9067	82.6282	86.0710	89.5138	92.9567	96.3995	99.8424
358	.5787	.3001	.0216	.7430	.4644	.1859	.9073	.6287	.0716	.5145	.9573	.4002	.8431
361	.5792	.3006	.0221	.7435	.4650	.1864	.9079	.6293	.0722	.5151	.9580	.4009	.8438
364	.5797	.3012	.0226	.7441	.4655	.1870	.9084	.6299	.0728	.5157	.9586	.4015	.8444
367	.5802	.3017	.0231	.7446	.4661	.1875	.9090	.6305	.0734	.5163	.9593	.4022	.8451
430370	70.5807	72.3022	74.0236	75.7451	77.4666	79.1881	80.9096	92.6310	86.0740	89.5170	92.9599	96.4029	99.8458
373	.5812	.3027	.0242	.7456	.4671	.1886	.9101	.6316	.0746	.5176	.9606	.4036	.8465
376	.5817	.3032	.0247	.7462	.4677	.1892	.9107	.6322	.0752	.5182	.9612	.4042	.8472
379	.5822	.3037	.0252	.7467	.4682	.1897	.9113	.6328	.0758	.5188	.9619	.4049	.8479
382	.5826	.3042	.0257	.7472	.4688	.1903	.9118	.6333	.0764	.5195	.9625	.4056	.8486
430385	70.5831	72.3047	74.0262	75.7478	77.4693	79.1908	80.9124	82.6339	86.0770	89.5201	92.9632	96.4062	99.8493
388	.5836	.3052	.0267	.7483	.4698	.1914	.9129	.6345	.0776	.5207	.9638	.4069	.8500
391	.5841	.3057	.0273	.7488	.4704	.1919	.9135	.6351	.0782	.5213	.9645	.4076	.8507
394	.5846	.3062	.0278	.7493	.4709	.1925	.9141	.6356	.0788	.5220	.9651	.4083	.8514
397	.5851	.3067	.0283	.7499	.4715	.1930	.9146	.6362	.0794	.5226	.9658	.4089	.8521
430400	70.5856	72.3072	74.0288	75.7504	77.4720	79.1936	80.9152	82.6368	86.0800	89.5232	92.9664	96.4096	99.8528

MEGACYCLES PER SECOND

H A R M O N I C S

BASIC FREQ.	112	116	120	124	128	132	136	140	144	148	152	156	160
430400	48.2048	49.9264	51.6480	53.3696	55.0912	56.8128	58.5344	60.2560	61.9776	63.6992	65.4208	67.1424	68.8640
403	.2051	.9267	.6484	.3700	.0916	.8132	.5348	.2564	.9780	.6996	.4213	.1429	.8645
406	.2055	.9271	.6487	.3703	.0920	.8136	.5352	.2568	.9785	.7001	.4217	.1433	.8650
409	.2058	.9274	.6491	.3707	.0924	.8140	.5356	.2573	.9789	.7005	.4222	.1438	.8654
412	.2061	.9278	.6494	.3711	.0927	.8144	.5360	.2577	.9793	.7010	.4226	.1443	.8659
430415	48.2065	49.9281	51.6498	53.3715	55.0931	56.8148	58.5364	60.2581	61.9798	63.7014	65.4231	67.1447	68.8664
418	.2068	.9285	.6502	.3718	.0935	.8152	.5368	.2585	.9802	.7019	.4235	.1452	.8669
421	.2072	.9288	.6505	.3722	.0939	.8155	.5373	.2589	.9806	.7023	.4240	.1457	.8674
424	.2075	.9292	.6509	.3726	.0943	.8160	.5377	.2594	.9811	.7028	.4244	.1461	.8678
427	.2078	.9295	.6512	.3729	.0947	.8164	.5381	.2598	.9815	.7032	.4249	.1466	.8633
430430	48.2082	49.9299	51.6516	53.3733	55.0950	56.8168	58.5385	60.2602	61.9819	63.7036	65.4254	67.1471	68.8688
433	.2085	.9302	.6520	.3737	.0954	.8172	.5389	.2606	.9824	.7041	.4258	.1475	.8693
436	.2088	.9306	.6523	.3741	.0958	.8176	.5393	.2610	.9828	.7045	.4263	.1480	.8698
439	.2092	.9309	.6527	.3744	.0962	.8179	.5397	.2615	.9832	.7050	.4267	.1485	.8702
442	.2095	.9313	.6530	.3748	.0966	.8183	.5401	.2619	.9836	.7054	.4272	.1490	.8707
430445	48.2098	49.9316	51.6534	53.3752	55.0970	56.8187	58.5405	60.2623	61.9841	63.7059	65.4276	67.1494	68.8712
448	.2102	.9320	.6538	.3756	.0973	.8191	.5409	.2627	.9845	.7063	.4281	.1499	.8717
451	.2105	.9323	.6541	.3759	.0977	.8195	.5413	.2631	.9849	.7067	.4286	.1504	.8722
454	.2108	.9327	.6545	.3763	.0981	.8199	.5417	.2636	.9854	.7072	.4290	.1508	.8726
457	.2112	.9330	.6548	.3767	.0985	.8203	.5422	.2640	.9858	.7076	.4295	.1513	.8731
430460	48.2115	49.9334	51.6552	53.3770	55.0989	56.8207	58.5426	60.2644	61.9862	63.7081	65.4299	67.1518	68.8736
463	.2119	.9337	.6556	.3774	.0993	.8211	.5430	.2648	.9867	.7085	.4304	.1522	.8741
466	.2122	.9341	.6559	.3778	.0996	.8215	.5434	.2652	.9871	.7090	.4308	.1527	.8746
469	.2125	.9344	.6563	.3782	.1000	.8219	.5438	.2657	.9875	.7094	.4313	.1532	.8750
472	.2129	.9348	.6566	.3785	.1004	.8223	.5442	.2661	.9880	.7099	.4317	.1536	.8755
430475	48.2132	49.9351	51.6570	53.3789	55.1008	56.8227	58.5446	60.2665	61.9884	63.7103	65.4322	67.1541	68.8760
478	.2135	.9354	.6574	.3793	.1012	.8231	.5450	.2669	.9888	.7107	.4327	.1546	.8765
481	.2139	.9358	.6577	.3796	.1016	.8235	.5454	.2673	.9893	.7112	.4331	.1550	.8770
484	.2142	.9361	.6581	.3800	.1020	.8239	.5458	.2678	.9897	.7116	.4336	.1555	.8774
487	.2145	.9365	.6584	.3804	.1023	.8243	.5462	.2682	.9901	.7121	.4340	.1560	.8779
430490	48.2149	49.9368	51.6588	53.3808	55.1027	56.8247	58.5466	60.2686	61.9906	63.7125	65.4345	67.1564	68.8784
493	.2152	.9372	.6592	.3811	.1031	.8251	.5470	.2690	.9910	.7130	.4349	.1569	.8789
496	.2156	.9375	.6595	.3815	.1035	.8255	.5475	.2694	.9914	.7134	.4354	.1574	.8794
499	.2159	.9379	.6599	.3819	.1039	.8259	.5479	.2699	.9919	.7139	.4358	.1578	.8798
502	.2162	.9382	.6602	.3822	.1043	.8263	.5483	.2703	.9923	.7143	.4363	.1583	.8803
430505	48.2166	49.9386	51.6606	53.3826	55.1046	56.8267	58.5487	60.2707	61.9927	63.7147	65.4368	67.1588	68.8808
508	.2169	.9389	.6610	.3830	.1050	.8271	.5491	.2711	.9932	.7152	.4372	.1592	.8813
511	.2172	.9393	.6613	.3834	.1054	.8275	.5495	.2715	.9936	.7156	.4377	.1597	.8818
514	.2176	.9396	.6617	.3837	.1058	.8278	.5499	.2720	.9940	.7161	.4381	.1602	.8822
517	.2179	.9400	.6620	.3841	.1062	.8282	.5503	.2724	.9944	.7165	.4386	.1607	.8827
430520	48.2182	49.9403	51.6624	53.3845	55.1066	56.8286	58.5507	60.2728	61.9949	63.7170	65.4390	67.1611	68.8832
523	.2186	.9407	.6628	.3849	.1069	.8290	.5511	.2732	.9953	.7174	.4395	.1616	.8837
526	.2189	.9410	.6631	.3852	.1073	.8294	.5515	.2736	.9957	.7178	.4400	.1621	.8842
529	.2192	.9414	.6635	.3856	.1077	.8298	.5519	.2741	.9962	.7183	.4404	.1625	.8846
532	.2196	.9417	.6638	.3860	.1081	.8302	.5524	.2745	.9966	.7187	.4409	.1630	.8851
430535	48.2199	49.9421	51.6642	53.3863	55.1085	56.8306	58.5528	60.2749	61.9970	63.7192	65.4413	67.1635	68.8856
538	.2203	.9424	.6646	.3867	.1089	.8310	.5532	.2753	.9975	.7196	.4418	.1639	.8861
541	.2206	.9428	.6649	.3871	.1092	.8314	.5536	.2757	.9979	.7201	.4422	.1644	.8866
544	.2209	.9431	.6653	.3875	.1096	.8318	.5540	.2762	.9983	.7205	.4427	.1649	.8870
547	.2213	.9435	.6656	.3878	.1100	.8322	.5544	.2766	.9988	.7210	.4431	.1653	.8875
430550	48.2216	49.9438	51.6660	53.3882	55.1104	56.6826	58.5548	60.2770	61.9992	63.7214	65.4436	67.1658	68.8880
553	.2219	.9441	.6664	.3886	.1108	.8330	.5552	.2774	.9996	.7218	.4441	.1663	.8885
556	.2223	.9445	.6667	.3889	.1112	.8334	.5556	.2778	62.0001	.7223	.4445	.1667	.8890
559	.2226	.9448	.6671	.3893	.1116	.8338	.5560	.2783	.0005	.7227	.4450	.1672	.8894
562	.2229	.9452	.6674	.3897	.1119	.8342	.5564	.2787	.0009	.7232	.4454	.1677	.8899
430565	48.2233	49.9455	51.6678	53.3901	55.1123	56.8346	58.5568	60.2791	62.0014	63.7236	65.4459	67.1681	68.8904
568	.2236	.9459	.6682	.3904	.1127	.8350	.5572	.2795	.0018	.7241	.4463	.1686	.8909
571	.2240	.9462	.6685	.3908	.1131	.8354	.5577	.2799	.0022	.7245	.4468	.1691	.8914
574	.2243	.9466	.6689	.3912	.1135	.8358	.5581	.2804	.0027	.7250	.4472	.1695	.8918
577	.2246	.9469	.6692	.3915	.1139	.8362	.5585	.2808	.0031	.7254	.4477	.1700	.8923
430580	48.2250	49.9473	51.6696	53.3919	55.1142	56.8366	58.5589	60.2812	62.0035	63.7258	65.4482	67.1705	68.8928
583	.2253	.9476	.6700	.3923	.1146	.8370	.5593	.2816	.0040	.7263	.4486	.1709	.8933
586	.2256	.9480	.6703	.3927	.1150	.8374	.5597	.2820	.0044	.7267	.4491	.1714	.8938
589	.2260	.9483	.6707	.3930	.1154	.8377	.5601	.2825	.0048	.7272	.4495	.1719	.8942
592	.2263	.9487	.6710	.3934	.1158	.8381	.5605	.2829	.0052	.7276	.4500	.1724	.8947
430595	48.2266	49.9490	51.6714	53.3938	55.1162	56.8385	58.5609	60.2833	62.0057	63.7281	65.4504	67.1728	68.8952
598	.2270	.9494	.6718	.3942	.1165	.8389	.5613	.2837	.0061	.7285	.4509	.1733	.8957
601	.2273	.9497	.6721	.3945	.1169	.8393	.5617	.2841	.0065	.7289	.4514	.1738	.8962
604	.2276	.9501	.6725	.3949	.1173	.8397	.5621	.2846	.0070	.7294	.4518	.1742	8966
607	.2280	.9504	.6728	.3953	.1177	.8401	.5626	.2850	.0074	.7298	.4523	.1747	.8971
430610	48.2283	49.9508	51.6732	53.3956	55.1181	56.8405	58.5630	60.2854	62.0078	63.7303	65.4527	67.1752	68.8976
613	.2287	.9511	.6736	.3960	.1185	.8409	.5634	.2858	.0083	.7307	.4532	.1756	.8981
616	.2290	.9515	.6739	.3964	.1188	.8413	.5638	.2862	.0087	.7312	.4536	.1761	.8986
619	.2293	.9518	.6743	.3968	.1192	.8417	.5642	.2867	.0091	.7316	.4541	.1766	.8990
622	.2297	.9522	.6746	.3971	.1196	.8421	.5646	.2871	.0096	.7321	.4545	.1770	.8995
430625	48.2300	49.9525	51.6750	53.3975	55.1200	56.8425	58.5650	60.2875	62.0100	63.7325	65.4550	67.1775	68.9000
628	.2303	.9528	.6754	.3979	.1204	.8429	.5654	.2879	.0104	.7329	.4555	.1780	.9005
631	.2307	.9532	.6757	.3982	.1208	.8433	.5658	.2883	.0109	.7334	.4559	.1784	.9010
634	.2310	.9535	.6761	.3986	.1212	.8437	.5662	.2888	.0113	.7338	.4564	.1789	.9014
637	.2313	.9539	.6764	.3990	.1215	.8441	.5666	.2892	.0117	.7343	.4568	.1794	.9019
430640	48.2317	49.9542	51.6768	53.3994	55.1219	56.8445	58.5670	60.2896	62.0122	63.7347	65.4573	67.1798	68.9024
643	.2320	.9546	.6772	.3997	.1223	.8449	.5674	.2900	.0126	.7352	.4577	.1803	.9029
646	.2324	.9549	.6775	.4001	.1227	.8453	.5679	.2904	.0130	.7356	.4582	.1808	.9034
649	.2327	.9553	.6779	.4005	.1231	.8457	.5683	.2909	.0135	.7361	.4586	.1812	.9038
652	.2330	.9556	.6782	.4008	.1235	.8461	.5687	.2913	.0139	.7365	.4591	.1817	.9043
430655	48.2334	49.9560	51.6786	53.4012	55.1238	56.8465	58.5691	60.2917	61.0143	63.7369	65.4596	67.1822	68.9048
658	.2337	.9563	.6790	.4016	.1242	.8469	.5695	.2921	.0148	.7374	.4600	.1826	.9053
661	.2340	.9567	.6793	.4020	.1246	.8473	.5699	.2925	.0152	.7378	.4605	.1831	.9058
664	.2344	.9570	.6797	.4023	.1250	.8476	.5703	.2930	.0156	.7383	.4609	.1836	.9062
667	.2347	.9574	.6800	.4027	.1254	.8480	.5707	.2934	.0160	.7387	.4614	.1841	.9067
430670	48.2350	49.9577	51.6804	53.4031	55.1258	56.8484	58.5711	60.2938	62.0165	63.7392	65.4618	67.1845	68.9072
673	.2354	.9581	.6808	.4035	.1261	.8488	.5715	.2942	.0169	.7396	.4623	.1850	.9077
676	.2357	.9584	.6811	.4038	.1265	.8492	.5719	.2946	.0173	.7400	.4628	.1855	.9082
679	.2360	.9588	.6815	.4042	.1269	.8496	.5723	.2951	.0178	.7405	.4632	.1859	.9086
682	.2364	.9591	.6818	.4046	.1273	.8500	.5728	.2955	.0182	.7409	.4637	.1864	.9091
430685	48.2367	49.9595	51.6822	53.4049	55.1277	56.8504	58.5732	60.2959	62.0186	63.7414	65.4641	67.1869	68.9096
688	.2371	.9598	.6826	.4053	.1281	.8508	.5736	.2963	.0191	.7418	.4646	.1873	.9101
691	.2374	.9602	.6829	.4057	.1284	.8512	.5740	.2967	.0195	.7423	.4650	.1878	.9106
694	.2377	.9605	.6833	.4061	.1288	.8516	.5744	.2972	.0199	.7427	.4655	.1883	.9110
697	.2381	.9609	.6836	.4064	.1292	.8520	.5748	.2976	.0204	.7432	.4659	.1887	.9115
430700	48.2384	49.9612	51.6840	53.4068	55.1296	56.8524	58.5752	60.2980	62.0208	63.7436	65.4664	67.1892	68.9120

MEGACYCLES PER SECOND

HARMONICS

BASIC FREQ.	164	168	172	176	180	184	188	192	200	208	216	224	232
430400	70.5856	72.3072	74.0288	75.7504	77.4720	79.1936	80.9152	82.6368	86.0800	89.5232	92.9664	96.4096	99.8528
403	.5861	.3077	.0293	.7509	.4725	.1942	.9158	.6374	.0806	.5238	.9670	.4103	.8535
406	.5866	.3082	.0298	.7515	.4731	.1947	.9163	.6380	.0812	.5244	.9677	.4109	.8542
409	.5871	.3087	.0303	.7520	.4736	.1953	.9169	.6385	.0818	.5251	.9683	.4116	.8549
412	.5876	.3092	.0309	.7525	.4742	.1958	.9175	.6391	.0824	.5257	.9690	.4123	.8556
430415	70.5881	72.3097	74.0314	75.7530	77.4747	79.1964	80.9180	82.6397	86.0830	89.5263	92.9696	96.4130	99.8563
418	.5886	.3102	.0319	.7536	.4752	.1969	.9186	.6403	.0836	.5269	.9703	.4136	.8570
421	.5890	.3107	.0324	.7541	.4758	.1975	.9191	.6408	.0842	.5276	.9709	.4143	.8577
424	.5895	.3112	.0329	.7546	.4763	.1980	.9197	.6414	.0848	.5282	.9716	.4150	.8584
427	.5900	.3117	.0334	.7552	.4769	.1986	.9203	.6420	.0854	.5288	.9722	.4156	.8591
430430	70.5905	72.3122	74.0340	75.7557	77.4774	79.1991	80.9208	82.6426	86.0860	89.5294	92.9729	96.4163	99.8598
433	.5910	.3127	.0345	.7562	.4779	.1997	.9214	.6431	.0866	.5301	.9735	.4170	.8605
436	.5915	.3132	.0350	.7567	.4785	.2002	.9220	.6437	.0872	.5307	.9742	.4177	.8612
439	.5920	.3138	.0355	.7573	.4790	.2008	.9225	.6443	.0878	.5313	.9748	.4183	.8618
442	.5925	.3143	.0360	.7578	.4796	.2013	.9231	.6449	.0884	.5319	.9755	.4190	.8625
430445	70.5930	72.3148	74.0365	75.7583	77.4801	79.2019	80.9237	82.6454	86.0890	89.5326	92.9761	96.4197	99.8632
448	.5935	.3153	.0371	.7588	.4806	.2024	.9242	.6460	.0896	.5332	.9768	.4204	.8639
451	.5940	.3158	.0376	.7594	.4812	.2030	.9248	.6466	.0902	.5338	.9774	.4210	.8646
454	.5945	.3163	.0381	.7599	.4817	.2035	.9254	.6472	.0908	.5344	.9781	.4217	.8653
457	.5949	.3168	.0386	.7604	.4823	.2041	.9259	.6477	.0914	.5351	.9787	.4224	.8660
430460	70.5954	72.3173	74.0391	75.7610	77.4828	79.2046	80.9265	82.6483	86.0920	89.5357	92.9794	96.4230	99.8667
463	.5959	.3178	.0396	.7615	.4833	.2052	.9270	.6489	.0926	.5363	.9800	.4237	.8674
466	.5964	.3183	.0402	.7620	.4839	.2057	.9276	.6495	.0932	.5369	.9807	.4244	.8681
469	.5969	.3188	.0407	.7625	.4844	.2063	.9282	.6500	.0938	.5376	.9813	.4251	.8688
472	.5974	.3193	.0412	.7631	.4850	.2068	.9287	.6506	.0944	.5382	.9820	.4257	.8695
430475	70.5979	72.3198	74.0417	75.7636	77.4855	79.2074	80.9293	82.6512	86.0950	89.5388	92.9826	96.4264	99.8702
478	.5984	.3203	.0422	.7641	.4860	.2080	.9299	.6518	.0956	.5394	.9832	.4271	.8709
481	.5989	.3208	.0427	.7647	.4866	.2085	.9304	.6524	.0962	.5400	.9839	.4277	.8716
484	.5994	.3213	.0432	.7652	.4871	.2091	.9310	.6529	.0968	.5407	.9845	.4284	.8723
487	.5999	.3218	.0438	.7657	.4877	.2096	.9316	.6535	.0974	.5413	.9852	.4291	.8730
430490	70.6004	72.3223	74.0443	75.7662	77.4882	79.2102	80.9321	82.6541	86.0980	89.5419	92.9858	96.4298	99.8737
493	.6009	.3228	.0448	.7668	.4887	.2107	.9327	.6547	.0986	.5425	.9865	.4304	.8744
496	.6013	.3233	.0453	.7673	.4893	.2113	.9332	.6552	.0992	.5432	.9871	.4311	.8751
499	.6018	.3238	.0458	.7678	.4898	.2118	.9338	.6558	.0998	.5438	.9878	.4318	.8758
502	.6023	.3243	.0463	.7684	.4904	.2124	.9344	.6564	.1004	.5444	.9884	.4324	.8765
430505	70.6028	72.3248	74.0469	75.7689	77.4909	79.2129	80.9349	82.6570	86.1010	89.5450	92.9891	96.4331	99.8772
508	.6033	.3253	.0474	.7694	.4914	.2135	.9355	.6575	.1016	.5457	.9897	.4338	.8779
511	.6038	.3258	.0479	.7699	.4920	.2140	.9361	.6581	.1022	.5463	.9904	.4345	.8786
514	.6043	.3264	.0484	.7705	.4925	.2146	.9366	.6587	.1028	.5469	.9910	.4351	.8792
517	.6048	.3269	.0489	.7710	.4931	.2151	.9372	.6593	.1034	.5475	.9917	.4358	.8799
430520	70.6053	72.3274	74.0494	75.7715	77.4936	79.2157	80.9378	82.6598	86.1040	89.5482	92.9923	96.4365	99.8806
523	.6058	.3279	.0500	.7720	.4941	.2162	.9383	.6604	.1046	.5488	.9930	.4372	.8813
526	.6063	.3284	.0505	.7726	.4947	.2168	.9389	.6610	.1052	.5494	.9936	.4378	.8820
529	.6068	.3289	.0510	.7731	.4952	.2173	.9395	.6616	.1058	.5500	.9943	.4385	.8827
532	.6072	.3294	.0515	.7736	.4958	.2179	.9400	.6621	.1064	.5507	.9949	.4392	.8834
430535	70.6077	72.3299	74.0520	75.7742	77.4963	79.2184	80.9406	82.6627	86.1070	89.5513	92.9956	96.4398	99.8841
538	.6082	.3304	.0525	.7747	.4968	.2190	.9411	.6633	.1076	.5519	.9962	.4405	.8848
541	.6087	.3309	.0531	.7752	.4974	.2195	.9417	.6639	.1082	.5525	.9969	.4412	.8855
544	.6092	.3314	.0536	.7757	.4979	.2201	.9423	.6644	.1088	.5532	.9975	.4419	.8862
547	.6097	.3319	.0541	.7763	.4985	.2206	.9428	.6650	.1094	.5538	.9982	.4425	.8869
430550	70.6102	72.3324	74.0546	75.7768	77.4990	79.2212	80.9434	82.6656	86.1100	89.5544	92.9988	96.4432	99.8876
553	.6107	.3329	.0551	.7773	.4995	.2218	.9440	.6662	.1106	.5550	.9994	.4439	.8883
556	.6112	.3334	.0556	.7779	.5001	.2223	.9445	.6668	.1112	.5556	93.0001	.4445	.8890
559	.6117	.3339	.0561	.7784	.5006	.2229	.9451	.6673	.1118	.5563	.0007	.4452	.8897
562	.6122	.3344	.0567	.7789	.5012	.2234	.9457	.6679	.1124	.5569	.0014	.4459	.8904
430565	70.6127	72.3349	74.0572	75.7794	77.5017	79.2240	80.9462	82.6685	86.1130	89.5575	93.0020	96.4466	99.8911
568	.6132	.3354	.0577	.7800	.5022	.2245	.9468	.6691	.1136	.5581	.0027	.4472	.8918
571	.6136	.3359	.0582	.7805	.5028	.2251	.9473	.6696	.1142	.5588	.0033	.4479	.8925
574	.6141	.3364	.0587	.7810	.5033	.2256	.9479	.6702	.1148	.5594	.0040	.4486	.8932
577	.6146	.3369	.0592	.7816	.5039	.2262	.9485	.6708	.1154	.5600	.0046	.4492	.8939
430580	70.6151	72.3374	74.0598	75.7821	77.5044	79.2267	80.9490	82.6714	86.1160	89.5606	93.0053	96.4499	99.8946
583	.6156	.3379	.0603	.7826	.5049	.2273	.9496	.6719	.1166	.5613	.0059	.4506	.8953
586	.6161	.3384	.0608	.7831	.5055	.2278	.9502	.6725	.1172	.5619	.0066	.4513	.8960
589	.6166	.3390	.0613	.7837	.5060	.2284	.9507	.6731	.1178	.5625	.0072	.4519	.8966
592	.6171	.3395	.0618	.7842	.5066	.2289	.9513	.6737	.1184	.5631	.0079	.4526	.8973
430595	70.6176	72.3400	74.0623	75.7847	77.5071	79.2295	80.9519	82.6742	86.1190	89.5638	93.0085	96.4533	99.8980
598	.6181	.3405	.0629	.7852	.5076	.2300	.9524	.6748	.1196	.5644	.0092	.4540	.8987
601	.6186	.3410	.0634	.7858	.5082	.2306	.9530	.6754	.1202	.5650	.0098	.4546	.8994
604	.6191	.3415	.0639	.7863	.5087	.2311	.9536	.6760	.1208	.5656	.0105	.4553	.9001
607	.6195	.3420	.0644	.7868	.5093	.2317	.9541	.6765	.1214	.5663	.0111	.4560	.9008
430610	70.6200	72.3425	74.0649	75.7874	77.5098	79.2322	80.9547	82.6771	86.1220	89.5669	93.0118	96.4566	99.9015
613	.6205	.3430	.0654	.7879	.5103	.2328	.9552	.6777	.1226	.5675	.0124	.4573	.9022
616	.6210	.3435	.0660	.7884	.5109	.2333	.9558	.6783	.1232	.5681	.0131	.4580	.9029
619	.6215	.3440	.0665	.7889	.5114	.2339	.9564	.6788	.1238	.5688	.0137	.4587	.9036
622	.6220	.3445	.0670	.7895	.5120	.2344	.9569	.6794	.1244	.5694	.0144	.4593	.9043
430625	70.6225	72.3450	74.0675	75.7900	77.5125	79.2350	80.9575	82.6800	86.1250	89.5700	93.0150	96.4600	99.9050
628	.6230	.3455	.0680	.7905	.5130	.2356	.9581	.6806	.1256	.5706	.0156	.4607	.9057
631	.6235	.3460	.0685	.7911	.5136	.2361	.9586	.6812	.1262	.5712	.0163	.4613	.9064
634	.6240	.3465	.0690	.7916	.5141	.2367	.9592	.6817	.1268	.5719	.0169	.4620	.9071
637	.6245	.3470	.0696	.7921	.5147	.2372	.9598	.6823	.1274	.5725	.0176	.4627	.9078
430640	70.6250	72.3475	74.0701	75.7926	77.5152	79.2378	80.9603	82.6829	86.1280	89.5731	93.0182	96.4634	99.9085
643	.6255	.3480	.0706	.7932	.5157	.2383	.9609	.6835	.1286	.5737	.0189	.4640	.9092
646	.6259	.3485	.0711	.7937	.5163	.2389	.9614	.6840	.1292	.5744	.0195	.4647	.9099
649	.6264	.3490	.0716	.7942	.5168	.2394	.9620	.6846	.1298	.5750	.0202	.4654	.9106
652	.6269	.3495	.0721	.7948	.5174	.2400	.9626	.6852	.1304	.5756	.0208	.4660	.9113
430655	70.6274	72.3500	74.0727	75.7953	77.5179	79.2405	80.9631	82.6858	86.1310	89.5762	93.0215	96.4667	99.9120
658	.6279	.3505	.0732	.7958	.5184	.2411	.9637	.6863	.1316	.5769	.0221	.4674	.9127
661	.6284	.3510	.0737	.7963	.5190	.2416	.9643	.6869	.1322	.5775	.0228	.4681	.9134
664	.6289	.3516	.0742	.7969	.5195	.2422	.9648	.6875	.1328	.5781	.0234	.4687	.9140
667	.6294	.3521	.0747	.7974	.5201	.2427	.9654	.6881	.1334	.5787	.0241	.4694	.9147
430670	70.6299	72.3526	74.0752	75.7979	77.5206	79.2433	80.9660	82.6886	86.1340	89.5794	93.0247	96.4701	99.9154
673	.6304	.3531	.0758	.7984	.5211	.2438	.9665	.6892	.1346	.5800	.0254	.4708	.9161
676	.6309	.3536	.0763	.7990	.5217	.2444	.9671	.6898	.1352	.5806	.0260	.4714	.9168
679	.6314	.3541	.0768	.7995	.5222	.2449	.9677	.6904	.1358	.5812	.0267	.4721	.9175
682	.6318	.3546	.0773	.8000	.5228	.2455	.9682	.6909	.1364	.5819	.0273	.4728	.9182
430685	70.6323	72.3551	74.0778	75.8006	77.5233	79.2460	80.9688	82.6915	86.1370	89.5825	93.0280	96.4734	99.9189
688	.6328	.3556	.0783	.8011	.5238	.2466	.9693	.6921	.1376	.5831	.0286	.4741	.9196
691	.6333	.3561	.0789	.8016	.5244	.2471	.9699	.6927	.1382	.5837	.0293	.4748	.9203
694	.6338	.3566	.0794	.8021	.5249	.2477	.9705	.6932	.1388	.5844	.0299	.4755	.9210
697	.6343	.3571	.0799	.8027	.5255	.2482	.9710	.6938	.1394	.5850	.0306	.4761	.9217
430700	70.6348	72.3576	74.0804	75.8032	77.5260	79.2488	80.9716	82.6944	86.1400	89.5856	93.0312	96.4768	99.9224

H A R M O N I C S

BASIC FREQ.	112	116	120	124	128	132	136	140	144	148	152	156	160
430700	48.2384	49.9612	51.6840	53.4068	55.1296	56.8524	58.5752	60.2980	62.0208	63.7436	65.4664	67.1892	68.9120
703	.2387	.9615	.6844	.4072	.1300	.8528	.5756	.2984	.0212	.7440	.4669	.1897	.9125
706	.2391	.9619	.6847	.4075	.1304	.8532	.5760	.2988	.0217	.7445	.4673	.1901	.9130
709	.2394	.9622	.6851	.4079	.1308	.8536	.5764	.2993	.0221	.7449	.4678	.1906	.9134
712	.2397	.9626	.6854	.4083	.1311	.8540	.5768	.2997	.0225	.7454	.4682	.1911	.9139
430715	48.2401	49.9629	51.6858	53.4087	55.1315	56.8544	58.5772	60.3001	62.0230	63.7458	65.4687	67.1915	68.9144
718	.2404	.9633	.6862	.4090	.1319	.8548	.5776	.3005	.0234	.7463	.4691	.1920	.9149
721	.2408	.9636	.6865	.4094	.1323	.8552	.5781	.3009	.0238	.7467	.4696	.1925	.9154
724	.2411	.9640	.6869	.4098	.1327	.8556	.5785	.3014	.0243	.7472	.4700	.1929	.9158
727	.2414	.9643	.6872	.4101	.1331	.8560	.5789	.3018	.0247	.7476	.4705	.1934	.9163
430730	48.2418	49.9647	51.6876	53.4105	55.1334	56.8564	58.5793	60.3022	62.0251	63.7480	65.4710	67.1939	68.9168
733	.2421	.9650	.6880	.4109	.1338	.8568	.5797	.3026	.0256	.7485	.4714	.1943	.9173
736	.2424	.9654	.6883	.4113	.1342	.8572	.5801	.3030	.0260	.7489	.4719	.1948	.9178
739	.2428	.9657	.6887	.4116	.1346	.8575	.5805	.3035	.0264	.7494	.4723	.1953	.9182
742	.2431	.9661	.6890	.4120	.1350	.8579	.5809	.3039	.0268	.7498	.4728	.1958	.9187
430745	48.2434	49.9664	51.6894	53.4124	55.1354	56.8583	56.5813	60.3043	62.0273	63.7503	65.4732	67.1962	68.9192
748	.2438	.9668	.6898	.4128	.1357	.8587	.5817	.3047	.0277	.7507	.4737	.1967	.9197
751	.2441	.9671	.6901	.4131	.1361	.8591	.5821	.3051	.0281	.7511	.4742	.1972	.9202
754	.2444	.9675	.6905	.4135	.1365	.8595	.5825	.3056	.0286	.7516	.4746	.1976	.9206
757	.2448	.9678	.6908	.4139	.1369	.8599	.5830	.3060	.0290	.7520	.4751	.1981	.9211
430760	48.2451	49.9682	51.6912	53.4142	55.1373	56.8603	58.5834	60.3064	62.0294	63.7525	65.4755	67.1986	68.9216
763	.2455	.9685	.6916	.4146	.1377	.8607	.5838	.3068	.0299	.7529	.4760	.1990	.9221
766	.2458	.9689	.6919	.4150	.1380	.8611	.5842	.3072	.0303	.7534	.4764	.1995	.9226
769	.2461	.9692	.6923	.4154	.1384	.8615	.5846	.3077	.0307	.7538	.4769	.2000	.9230
772	.2465	.9696	.6926	.4157	.1388	.8619	.5850	.3081	.0312	.7543	.4773	.2004	.9235
430775	48.2468	49.9699	51.6930	53.4161	55.1392	56.8623	58.5854	60.3085	62.0316	63.7547	65.4778	67.2009	68.9240
778	.2471	.9702	.6934	.4165	.1396	.8627	.5858	.3089	.0320	.7551	.4783	.2014	.9245
781	.2475	.9706	.6937	.4168	.1400	.8631	.5862	.3093	.0325	.7556	.4787	.2018	.9250
784	.2478	.9709	.6941	.4172	.1404	.8635	.5866	.3098	.0329	.7560	.4792	.2023	.9254
787	.2481	.9713	.6944	.4176	.1407	.8639	.5870	.3102	.0333	.7565	.4796	.2028	.9259
430790	48.2485	49.9716	51.6948	53.4180	55.1411	56.8643	58.5874	60.3106	62.0338	63.7569	65.4801	67.2032	68.9264
793	.2488	.9720	.6952	.4183	.1415	.8647	.5878	.3110	.0342	.7574	.4805	.2037	.9269
796	.2492	.9723	.6955	.4187	.1419	.8651	.5883	.3114	.0346	.7578	.4810	.2042	.9274
799	.2495	.9727	.6959	.4191	.1423	.8655	.5887	.3119	.0351	.7583	.4814	.2046	.9278
802	.2498	.9730	.6962	.4194	.1427	.8659	.5891	.3123	.0355	.7587	.4819	.2051	.9283
430805	48.2502	49.9734	51.6966	51.4198	55.1430	56.8663	58.5895	60.3127	62.0359	63.7591	65.4824	67.2056	68.9288
808	.2505	.9737	.6970	.4202	.1434	.8667	.5899	.3131	.0364	.7596	.4828	.2060	.9293
811	.2508	.9741	.6973	.4206	.1438	.8671	.5903	.3135	.0368	.7600	.4833	.2065	.9298
814	.2512	.9744	.6977	.4209	.1442	.8674	.5907	.3140	.0372	.7605	.4837	.2070	.9302
817	.2515	.9748	.6980	.4213	.1446	.8678	.5911	.3144	.0376	.7609	.4842	.2075	.9307
430820	48.2518	49.9751	51.6984	53.4217	55.1450	56.8682	58.5915	60.3148	62.0381	63.7614	65.4846	67.2079	68.9312
823	.2522	.9755	.6988	.4221	.1453	.8686	.5919	.3152	.0385	.7618	.4851	.2084	.9317
826	.2525	.9758	.6991	.4224	.1457	.8690	.5923	.3156	.0389	.7622	.4856	.2089	.9322
829	.2528	.9762	.6995	.4228	.1461	.8694	.5927	.3161	.0394	.7627	.4860	.2093	.9326
832	.2532	.9765	.6998	.4232	.1465	.8698	.5932	.3165	.0398	.7631	.4865	.2098	.9331
430835	48.2535	49.9769	51.7002	53.4235	55.1469	56.8702	58.5936	60.3169	62.0402	63.7636	65.4869	67.2103	68.9336
838	.2539	.9772	.7006	.4239	.1473	.8706	.5940	.3173	.0407	.7640	.4874	.2107	.9341
841	.2542	.9776	.7009	.4243	.1476	.8710	.5944	.3177	.0411	.7645	.4878	.2112	.9346
844	.2545	.9779	.7013	.4247	.1480	.8714	.5948	.3182	.0415	.7649	.4883	.2117	.9350
847	.2549	.9783	.7016	.4250	.1484	.8718	.5952	.3186	.0420	.7654	.4887	.2121	.9355
430850	48.2552	49.9786	51.7020	53.4254	55.1488	56.8722	58.5956	60.3190	62.0424	63.7658	65.4892	67.2126	68.9360
853	.2555	.9789	.7024	.4258	.1492	.8726	.5960	.3194	.0428	.7662	.4897	.2131	.9365
856	.2559	.9793	.7027	.4261	.1496	.8730	.5964	.3198	.0433	.7667	.4901	.2135	.9370
859	.2562	.9796	.7031	.4265	.1500	.8734	.5968	.3203	.0437	.7671	.4906	.2140	.9374
862	.2565	.9800	.7034	.4269	.1503	.8738	.5972	.3207	.0441	.7676	.4910	.2145	.9379
430865	48.2569	49.9803	51.7038	53.4273	55.1507	56.8742	58.5976	60.3211	62.0446	63.7680	65.4915	67.2149	68.9384
868	.2572	.9807	.7042	.4276	.1511	.8746	.5980	.3215	.0450	.7685	.4919	.2154	.9389
871	.2576	.9810	.7045	.4280	.1515	.8750	.5985	.3219	.0454	.7689	.4924	.2159	.9394
874	.2579	.9814	.7049	.4284	.1519	.8754	.5989	.3224	.0459	.7694	.4928	.2163	.9398
877	.2582	.9817	.7052	.4287	.1523	.8758	.5993	.3228	.0463	.7698	.4933	.2168	.9403
430880	48.2586	49.9821	51.7056	53.4291	55.1526	56.8762	58.5997	60.3232	62.0467	63.7702	65.4938	67.2173	68.9408
883	.2589	.9824	.7060	.4295	.1530	.8766	.6001	.3236	.0472	.7707	.4942	.2177	.9413
886	.2592	.9828	.7063	.4299	.1534	.8770	.6005	.3240	.0476	.7711	.4947	.2182	.9418
889	.2596	.9831	.7067	.4302	.1538	.8773	.6009	.3245	.0480	.7716	.4951	.2187	.9422
892	.2599	.9835	.7070	.4306	.1542	.8777	.6013	.3249	.0484	.7720	.4956	.2192	.9427
430895	48.2602	49.9838	51.7074	53.4310	55.1546	56.8781	58.6017	60.3253	62.0489	63.7725	65.4960	67.2196	68.9432
898	.2606	.9842	.7078	.4314	.1549	.8785	.6021	.3257	.0493	.7729	.4965	.2201	.9437
901	.2609	.9845	.7081	.4317	.1553	.8789	.6025	.3261	.0497	.7733	.4970	.2206	.9442
904	.2612	.9849	.7085	.4321	.1557	.8793	.6029	.3266	.0502	.7738	.4974	.2210	.9446
907	.2616	.9852	.7088	.4325	.1561	.8797	.6034	.3270	.0506	.7742	.4979	.2215	.9451
430910	48.2619	49.9856	51.7092	53.4328	55.1565	56.8801	58.6038	60.3274	62.0510	63.7747	65.4983	67.2220	68.9456
913	.2623	.9859	.7096	.4332	.1569	.8805	.6042	.3278	.0515	.7751	.4988	.2224	.9461
916	.2626	.9863	.7099	.4336	.1572	.8809	.6046	.3282	.0519	.7756	.4992	.2229	.9466
919	.2629	.9866	.7103	.4340	.1576	.8813	.6050	.3287	.0523	.7760	.4997	.2234	.9470
922	.2633	.9870	.7106	.4343	.1580	.8817	.6054	.3291	.0528	.7765	.5001	.2238	.9475
430925	48.2636	49.9873	51.7110	53.4347	55.1584	56.8821	58.6058	60.3295	62.0532	63.7769	65.5006	67.2243	68.9480
928	.2639	.9876	.7114	.4351	.1588	.8825	.6062	.3299	.0536	.7773	.5011	.2248	.9485
931	.2643	.9880	.7117	.4354	.1592	.8829	.6066	.3303	.0541	.7778	.5015	.2252	.9490
934	.2646	.9883	.7121	.4358	.1596	.8833	.6070	.3308	.0545	.7782	.5020	.2257	.9494
937	.2649	.9887	.7124	.4362	.1599	.8837	.6074	.3312	.0549	.7787	.5024	.2262	.9499
430940	48.2653	49.9890	51.7128	53.4366	55.1603	56.8841	58.6078	60.3316	62.0554	63.7791	65.5029	67.2266	68.9504
943	.2656	.9894	.7132	.4369	.1607	.8845	.6082	.3320	.0558	.7796	.5033	.2271	.9509
946	.2660	.9897	.7135	.4373	.1611	.8849	.6087	.3324	.0562	.7800	.5038	.2276	.9514
949	.2663	.9901	.7139	.4377	.1615	.8853	.6091	.3329	.0567	.7805	.5042	.2280	.9518
952	.2666	.9904	.7142	.4380	.1619	.8857	.6095	.3333	.0571	.7809	.5047	.2285	.9523
430955	48.2670	49.9908	51.7146	53.4384	55.1622	56.8861	58.6099	60.3337	62.0575	63.7813	65.5052	67.2290	68.9528
958	.2673	.9911	.7150	.4388	.1626	.8865	.6103	.3341	.0580	.7818	.5056	.2294	.9533
961	.2676	.9915	.7153	.4392	.1630	.8869	.6107	.3345	.0584	.7822	.5061	.2299	.9538
964	.2680	.9918	.7157	.4395	.1634	.8872	.6111	.3350	.0588	.7827	.5065	.2304	.9542
967	.2683	.9922	.7160	.4399	.1638	.8876	.6115	.3354	.0592	.7831	.5070	.2309	.9547
430970	48.2686	49.9925	51.7164	53.4403	55.1642	56.8880	58.6119	60.3358	62.0597	63.7836	65.5074	67.2313	68.9552
973	.2690	.9929	.7168	.4407	.1645	.8884	.6123	.3362	.0601	.7840	.5079	.2318	.9557
976	.2693	.9932	.7171	.4410	.1649	.8888	.6127	.3366	.0605	.7844	.5084	.2323	.9562
979	.2696	.9936	.7175	.4414	.1653	.8892	.6131	.3371	.0610	.7849	.5088	.2327	.9566
982	.2700	.9939	.7178	.4418	.1657	.8896	.6136	.3375	.0614	.7853	.5093	.2332	.9571
430985	48.2703	49.9943	51.7182	53.4421	55.1661	56.8900	58.6140	60.3379	62.0618	63.7858	65.5097	67.2337	68.9576
988	.2707	.9946	.7186	.4425	.1665	.8904	.6144	.3383	.0623	.7862	.5102	.2341	.9581
991	.2710	.9950	.7189	.4429	.1668	.8908	.6148	.3387	.0627	.7867	.5106	.2346	.9586
994	.2713	.9953	.7193	.4433	.1672	.8912	.6152	.3392	.0631	.7871	.5111	.2351	.9590
997	.2717	.9957	.7196	.4436	.1676	.8916	.6156	.3396	.0636	.7876	.5115	.2355	.9595
431000	48.2720	49.9960	51.7200	53.4440	55.1680	56.8920	58.6160	60.3400	62.0640	63.7880	65.5120	67.2360	68.9600

MEGACYCLES PER SECOND

HARMONICS

BASIC FREQ.	164	168	172	176	180	184	188	192	200	208	216	224	232
430700	70.6348	72.3576	74.0804	75.8032	77.5260	79.2488	80.9716	82.6944	86.1400	89.5856	93.0312	96.4768	99.9224
703	.6353	.3581	.0809	.8037	.5265	.2494	.9722	.6950	.1406	.5862	.0318	.4775	.9231
706	.6358	.3586	.0814	.8043	.5271	.2499	.9727	.6956	.1412	.5868	.0325	.4781	.9238
709	.6363	.3591	.0819	.8048	.5276	.2505	.9733	.6961	.1418	.5875	.0331	.4788	.9245
712	.6368	.3596	.0825	.8053	.5282	.2510	.9739	.6967	.1424	.5881	.0338	.4795	.9252
430715	70.6373	72.3601	74.0830	75.8058	77.5287	79.2516	80.9744	82.6973	86.1430	89.5887	93.0344	96.4802	99.9259
718	.6378	.3606	.0835	.8064	.5292	.2521	.9750	.6979	.1436	.5893	.0351	.4808	.9266
721	.6382	.3611	.0840	.8069	.5298	.2527	.9755	.6984	.1442	.5900	.0357	.4815	.9273
724	.6387	.3616	.0845	.8074	.5303	.2532	.9761	.6990	.1448	.5906	.0364	.4822	.9280
727	.6392	.3621	.0850	.8080	.5309	.2538	.9767	.6996	.1454	.5912	.0370	.4828	.9287
430730	70.6397	72.3626	74.0856	75.8085	77.5314	79.2543	80.9772	82.7002	86.1460	89.5918	93.0377	96.4835	99.9294
733	.6402	.3631	.0861	.8090	.5319	.2549	.9778	.7007	.1466	.5925	.0383	.4842	.9301
736	.6407	.3636	.0866	.8095	.5325	.2554	.9784	.7013	.1472	.5931	.0390	.4849	.9308
739	.6412	.3642	.0871	.8101	.5330	.2560	.9789	.7019	.1478	.5937	.0396	.4855	.9314
742	.6417	.3647	.0876	.8106	.5336	.2565	.9795	.7025	.1484	.5943	.0403	.4862	.9321
430745	70.6422	72.3652	74.0881	75.8111	77.5341	79.2571	80.9801	82.7030	86.1490	89.5950	93.0409	96.4869	99.9328
748	.6427	.3657	.0887	.8116	.5346	.2576	.9806	.7036	.1496	.5956	.0416	.4876	.9335
751	.6432	.3662	.0892	.8122	.5352	.2582	.9812	.7042	.1502	.5962	.0422	.4882	.9342
754	.6437	.3667	.0897	.8127	.5357	.2587	.9818	.7048	.1508	.5968	.0429	.4889	.9349
757	.6441	.3672	.0902	.8132	.5363	.2593	.9823	.7053	.1514	.5975	.0435	.4896	.9356
430760	70.6446	72.3677	74.0907	75.8138	77.5368	79.2598	80.9829	82.7059	86.1520	89.5981	93.0442	96.4902	99.9363
763	.6451	.3682	.0912	.8143	.5373	.2604	.9834	.7065	.1526	.5987	.0448	.4909	.9370
766	.6456	.3687	.0918	.8148	.5379	.2609	.9840	.7071	.1532	.5993	.0455	.4916	.9377
769	.6461	.3692	.0923	.8153	.5384	.2615	.9846	.7076	.1538	.6000	.0461	.4923	.9384
772	.6466	.3697	.0928	.8159	.5390	.2620	.9851	.7082	.1544	.6006	.0468	.4929	.9391
430775	70.6471	72.3702	74.0933	75.8164	77.5395	79.2626	80.9857	82.7088	86.1550	89.6012	93.0474	96.4936	99.9398
778	.6476	.3707	.0938	.8169	.5400	.2632	.9863	.7094	.1556	.6018	.0480	.4943	.9405
781	.6481	.3712	.0943	.8175	.5406	.2637	.9868	.7100	.1562	.6024	.0487	.4949	.9412
784	.6486	.3717	.0948	.8180	.5411	.2643	.9874	.7105	.1568	.6031	.0493	.4956	.9419
787	.6491	.3722	.0954	.8185	.5417	.2648	.9880	.7111	.1574	.6037	.0500	.4963	.9426
430790	70.6496	72.3727	74.0959	75.8190	75.5422	79.2654	80.9885	82.7117	86.1580	89.6043	93.0506	96.4970	99.9433
793	.6501	.3732	.0964	.8196	.5427	.2659	.9891	.7123	.1586	.6049	.0513	.4976	.9440
796	.6505	.3737	.0969	.8201	.5433	.2665	.9896	.7128	.1592	.6056	.0519	.4983	.9447
799	.6510	.3742	.0974	.8206	.5438	.2670	.9902	.7134	.1598	.6062	.0526	.4990	.9454
802	.6515	.3747	.0979	.8212	.5444	.2676	.9908	.7140	.1604	.6068	.0532	.4996	.9461
430805	70.6520	72.3752	74.0985	75.8217	77.5449	79.2681	80.9913	82.7146	86.1610	89.6074	93.0539	96.5003	99.9468
808	.6525	.3757	.0990	.8222	.5454	.2687	.9919	.7151	.1616	.6081	.0545	.5010	.9475
811	.6530	.3762	.0995	.8227	.5460	.2692	.9925	.7157	.1622	.6087	.0552	.5017	.9482
814	.6535	.3768	.1000	.8233	.5465	.2698	.9930	.7163	.1628	.6093	.0558	.5023	.9488
817	.6540	.3773	.1005	.8238	.5471	.2703	.9936	.7169	.1634	.6099	.0565	.5030	.9495
430820	70.6545	72.3778	74.1010	75.8243	77.5476	79.2709	80.9942	82.7174	86.1640	89.6106	93.0571	96.5037	99.9502
823	.6550	.3783	.1016	.8248	.5481	.2714	.9947	.7180	.1646	.6112	.0578	.5044	.9509
826	.6555	.3788	.1021	.8254	.5487	.2720	.9953	.7186	.1652	.6118	.0584	.5050	.9516
829	.6560	.3793	.1026	.8259	.5492	.2725	.9959	.7192	.1658	.6124	.0591	.5057	.9523
832	.6564	.3798	.1031	.8264	.5498	.2731	.9964	.7197	.1664	.6131	.0597	.5064	.9530
430835	70.6569	72.3803	74.1036	75.8270	77.5503	79.2736	80.9970	82.7203	86.1670	89.6137	93.0604	96.5070	99.9537
838	.6574	.3808	.1041	.8275	.5508	.2742	.9975	.7209	.1676	.6143	.0610	.5077	.9544
841	.6579	.3813	.1047	.8280	.5514	.2747	.9981	.7215	.1682	.6149	.0617	.5084	.9551
844	.6584	.3818	.1052	.8285	.5519	.2753	.9987	.7220	.1688	.6156	.0623	.5091	.9558
847	.6589	.3823	.1057	.8291	.5525	.2758	.9992	.7226	.1694	.6162	.0630	.5097	.9565
430850	70.6594	72.3828	74.1062	75.8296	77.5530	79.2764	80.9998	82.7232	86.1700	89.6168	93.0636	96.5104	99.9572
853	.6599	.3833	.1067	.8301	.5535	.2770	81.0004	.7238	.1706	.6174	.0642	.5111	.9579
856	.6604	.3838	.1072	.8307	.5541	.2775	.0009	.7244	.1712	.6180	.0649	.5117	.9586
859	.6609	.3843	.1077	.8312	.5546	.2781	.0015	.7249	.1718	.6187	.0655	.5124	.9593
862	.6614	.3848	.1083	.8317	.5552	.2786	.0021	.7255	.1724	.6193	.0662	.5131	.9600
430865	70.6619	72.3853	74.1088	75.8322	77.5557	79.2792	81.0026	82.7261	86.1730	89.6199	93.0668	96.5138	99.9607
868	.6624	.3858	.1093	.8328	.5562	.2797	.0032	.7267	.1736	.6205	.0675	.5144	.9614
871	.6628	.3863	.1098	.8333	.5568	.2803	.0037	.7272	.1742	.6212	.0681	.5151	.9621
874	.6633	.3868	.1103	.8338	.5573	.2808	.0043	.7278	.1748	.6218	.0688	.5158	.9628
877	.6638	.3873	.1108	.8344	.5579	.2814	.0049	.7284	.1754	.6224	.0694	.5164	.9635
430880	70.6643	72.3878	74.1114	75.8349	77.5584	79.2819	81.0054	82.7290	86.1760	89.6230	93.0701	96.5171	99.9642
883	.6648	.3883	.1119	.8354	.5589	.2825	.0060	.7295	.1766	.6237	.0707	.5178	.9649
886	.6653	.3888	.1124	.8359	.5595	.2830	.0066	.7301	.1772	.6243	.0714	.5185	.9656
889	.6658	.3894	.1129	.8365	.5600	.2836	.0071	.7307	.1778	.6249	.0720	.5191	.9662
892	.6663	.3899	.1134	.8370	.5606	.2841	.0077	.7313	.1784	.6255	.0727	.5198	.9669
430895	70.6668	72.3904	74.1139	75.8375	77.5611	79.2847	81.0083	82.7318	86.1790	89.6262	93.0733	96.5205	99.9676
898	.6673	.3909	.1145	.8380	.5616	.2852	.0088	.7324	.1796	.6268	.0740	.5212	.9683
901	.6678	.3914	.1150	.8386	.5622	.2858	.0094	.7330	.1802	.6274	.0746	.5218	.9690
904	.6683	.3919	.1155	.8391	.5627	.2863	.0100	.7336	.1808	.6280	.0753	.5225	.9697
907	.6687	.3924	.1160	.8396	.5633	.2869	.0105	.7341	.1814	.6287	.0759	.5232	.9704
430910	70.6692	72.3929	74.1165	75.8402	77.5638	79.2874	81.0111	82.7347	86.1820	89.6293	93.0766	96.5238	99.9711
913	.6697	.3934	.1170	.8407	.5643	.2880	.0116	.7353	.1826	.6299	.0772	.5245	.9718
916	.6702	.3939	.1176	.8412	.5649	.2885	.0122	.7359	.1832	.6305	.0779	.5252	.9725
919	.6707	.3944	.1181	.8417	.5654	.2891	.0128	.7364	.1838	.6312	.0785	.5259	.9732
922	.6712	.3949	.1186	.8423	.5660	.2896	.0133	.7370	.1844	.6318	.0792	.5265	.9739
430925	70.6717	72.3954	74.1191	75.8428	77.5665	79.2902	81.0139	82.7376	86.1850	89.6324	93.0798	96.5272	99.9746
928	.6722	.3959	.1196	.8433	.5670	.2908	.0145	.7382	.1856	.6330	.0804	.5279	.9753
931	.6727	.3964	.1201	.8439	.5676	.2913	.0150	.7388	.1862	.6336	.0811	.5285	.9760
934	.6732	.3969	.1206	.8444	.5681	.2919	.0156	.7393	.1868	.6343	.0817	.5292	.9767
937	.6737	.3974	.1212	.8449	.5687	.2924	.0162	.7399	.1874	.6349	.0824	.5299	.9774
430940	70.6742	72.3979	74.1217	75.8454	77.5692	79.2930	81.0167	82.7405	86.1880	89.6355	93.0830	96.5306	99.9781
943	.6747	.3984	.1222	.8460	.5697	.2935	.0173	.7411	.1886	.6361	.0837	.5312	.9788
946	.6751	.3989	.1227	.8465	.5703	.2941	.0178	.7416	.1892	.6368	.0843	.5319	.9795
949	.6756	.3994	.1232	.8470	.5708	.2946	.0184	.7422	.1898	.6374	.0850	.5326	.9802
952	.6761	.3999	.1237	.8476	.5714	.2952	.0190	.7428	.1904	.6380	.0856	.5332	.9809
430955	70.6766	72.4004	74.1243	75.8481	77.5719	79.2957	81.0195	82.7434	86.1910	89.6386	93.0863	96.5339	99.9816
958	.6771	.4009	.1248	.8486	.5724	.2963	.0201	.7439	.1916	.6393	.0869	.5346	.9823
961	.6776	.4014	.1253	.8491	.5730	.2968	.0207	.7445	.1922	.6399	.0876	.5353	.9830
964	.6781	.4020	.1258	.8497	.5735	.2974	.0212	.7451	.1928	.6405	.0882	.5359	.9836
967	.6786	.4025	.1263	.8502	.5741	.2979	.0218	.7457	.1934	.6411	.0889	.5366	.9843
430970	70.6791	72.4030	74.1268	75.8507	77.5746	79.2985	81.0224	82.7462	86.1940	89.6418	93.0895	96.5373	99.9850
973	.6796	.4035	.1274	.8512	.5751	.2990	.0229	.7468	.1946	.6424	.0902	.5380	.9857
976	.6801	.4040	.1279	.8518	.5757	.2996	.0235	.7474	.1952	.6430	.0908	.5386	.9864
979	.6806	.4045	.1284	.8523	.5762	.3001	.0241	.7480	.1958	.6436	.0915	.5393	.9871
982	.6810	.4050	.1289	.8528	.5768	.3007	.0246	.7485	.1964	.6443	.0921	.5400	.9878
430985	70.6815	72.4055	74.1294	75.8534	77.5773	79.3012	81.0252	82.7491	86.1970	89.6449	93.0928	96.5406	99.9885
988	.6820	.4060	.1299	.8539	.5778	.3018	.0257	.7497	.1976	.6455	.0934	.5413	.9892
991	.6825	.4065	.1305	.8544	.5784	.3023	.0263	.7503	.1982	.6461	.0941	.5420	.9899
994	.6830	.4070	.1310	.8549	.5789	.3029	.0269	.7508	.1988	.6468	.0947	.5427	.9906
997	.6835	.4075	.1315	.8555	.5795	.3034	.0274	.7514	.1994	.6474	.0954	.5433	.9913
431000	70.6840	72.4080	74.1320	75.8560	77.5800	79.3040	81.0280	82.7520	86.2000	89.6480	93.0960	96.5440	99.9920

HARMONICS

BASIC FREQ.	112	116	120	124	128	132	136	140	144	148	152	156	160
431000	48.2720	49.9960	51.7200	53.4440	55.1680	56.8920	58.6160	60.3400	62.0640	63.7880	65.5120	67.2360	68.9600
003	.2723	.9963	.7204	.4444	.1684	.8924	.6164	.3404	.0644	.7884	.5125	.2365	.9605
006	.2727	.9967	.7207	.4447	.1688	.8928	.6168	.3408	.0649	.7889	.5129	.2369	.9610
009	.2730	.9970	.7211	.4451	.1692	.8932	.6172	.3413	.0653	.7893	.5134	.2374	.9614
012	.2733	.9974	.7214	.4455	.1695	.8936	.6176	.3417	.0657	.7898	.5138	.2379	.9619
431015	48.2737	49.9977	51.7218	53.4459	55.1699	56.8940	58.6180	60.3421	62.0662	63.7902	65.5143	67.2383	68.9624
018	.2740	.9981	.7222	.4462	.1703	.8944	.6184	.3425	.0666	.7907	.5147	.2388	.9629
021	.2744	.9984	.7225	.4466	.1707	.8948	.6189	.3429	.0670	.7911	.5152	.2393	.9634
024	.2747	.9988	.7229	.4470	.1711	.8952	.6193	.3434	.0675	.7916	.5156	.2397	.9638
027	.2750	.9991	.7232	.4473	.1715	.8956	.6197	.3438	.0679	.7920	.5161	.2402	.9643
431030	48.2754	49.9995	51.7236	53.4477	55.1718	56.8960	58.6201	60.3442	62.0683	63.7924	65.5166	67.2407	68.9648
033	.2757	.9998	.7240	.4481	.1722	.8964	.6205	.3446	.0688	.7929	.5170	.2411	.9653
036	.2760	50.0002	.7243	.4485	.1726	.8968	.6209	.3450	.0692	.7933	.5175	.2416	.9658
039	.2764	.0005	.7247	.4488	.1730	.8971	.6213	.3455	.0696	.7938	.5179	.2421	.9662
042	.2767	.0009	.7250	.4492	.1734	.8975	.6217	.3459	.0700	.7942	.5184	.2426	.9667
431045	48.2770	50.0012	51.7254	53.4496	55.1738	56.8979	58.6221	60.3463	62.0705	63.7947	65.5188	67.2430	68.9672
048	.2774	.0016	.7258	.4500	.1741	.8983	.6225	.3467	.0709	.7951	.5193	.2435	.9677
051	.2777	.0019	.7261	.4503	.1745	.8987	.6229	.3471	.0713	.7955	.5198	.2440	.9682
054	.2780	.0023	.7265	.4507	.1749	.8991	.6233	.3476	.0718	.7960	.5202	.2444	.9686
057	.2784	.0026	.7268	.4511	.1753	.8995	.6238	.3480	.0722	.7964	.5207	.2449	.9691
431060	48.2787	50.0030	51.7272	53.4514	55.1757	56.8999	58.6242	60.3484	62.0726	63.7969	65.5211	67.2454	68.9696
063	.2791	.0033	.7276	.4518	.1761	.9003	.6246	.3488	.0731	.7973	.5216	.2458	.9701
066	.2794	.0037	.7279	.4522	.1764	.9007	.6250	.3492	.0735	.7978	.5220	.2463	.9706
069	.2797	.0040	.7283	.4526	.1768	.9011	.6254	.3497	.0739	.7982	.5225	.2468	.9710
072	.2801	.0044	.7286	.4529	.1772	.9015	.6258	.3501	.0744	.7987	.5229	.2472	.9715
431075	48.2804	50.0047	51.7290	53.4533	55.1776	56.9019	58.6262	60.3505	62.0748	63.7991	65.5234	67.2477	68.9720
078	.2807	.0050	.7294	.4537	.1780	.9023	.6266	.3509	.0752	.7995	.5239	.2482	.9725
081	.2811	.0054	.7297	.4540	.1784	.9027	.6270	.3513	.0757	.8000	.5243	.2486	.9730
084	.2814	.0057	.7301	.4544	.1788	.9031	.6274	.3518	.0761	.8004	.5248	.2491	.9734
087	.2817	.0061	.7304	.4548	.1791	.9035	.6278	.3522	.0765	.8009	.5252	.2496	.9739
431090	48.2821	50.0064	51.7308	53.4552	55.1795	56.9039	58.6282	60.3526	62.0770	63.8013	65.5257	67.2500	68.9744
093	.2824	.0068	.7312	.4555	.1799	.9043	.6286	.3530	.0774	.8018	.5261	.2505	.9749
096	.2828	.0071	.7315	.4559	.1803	.9047	.6291	.3534	.0778	.8022	.5266	.2510	.9754
099	.2831	.0075	.7319	.4563	.1807	.9051	.6295	.3539	.0783	.8027	.5270	.2514	.9758
102	.2834	.0078	.7322	.4566	.1811	.9055	.6299	.3543	.0787	.8031	.5275	.2519	.9763
431105	48.2838	50.0082	51.7326	53.4570	55.1814	56.9059	58.6303	60.3547	62.0791	63.8035	65.5280	67.2524	68.9768
108	.2841	.0085	.7330	.4574	.1818	.9063	.6307	.3551	.0796	.8040	.5284	.2528	.9773
111	.2844	.0089	.7333	.4578	.1822	.9067	.6311	.3555	.0800	.8044	.5289	.2533	.9778
114	.2848	.0092	.7337	.4581	.1826	.9070	.6315	.3560	.0804	.8049	.5293	.2538	.9782
117	.2851	.0096	.7340	.4585	.1830	.9074	.6319	.3564	.0808	.8053	.5298	.2543	.9787
431120	48.2854	50.0099	51.7344	53.4589	55.1834	56.9078	58.6323	60.3568	62.0813	63.8058	65.5302	67.2547	68.9792
123	.2858	.0103	.7348	.4593	.1837	.9082	.6327	.3572	.0817	.8062	.5307	.2552	.9797
126	.2861	.0106	.7351	.4596	.1841	.9086	.6331	.3576	.0821	.8066	.5312	.2557	.9802
129	.2864	.0110	.7355	.4600	.1845	.9090	.6335	.3581	.0826	.8071	.5316	.2561	.9806
132	.2868	.0113	.7358	.4604	.1849	.9094	.6340	.3585	.0830	.8075	.5321	.2566	.9811
431135	48.2871	50.0117	51.7362	53.4607	55.1853	56.9098	58.6344	60.3589	62.0834	63.8080	65.5325	67.2571	68.9816
138	.2875	.0120	.7366	.4611	.1857	.9102	.6348	.3593	.0839	.8084	.5330	.2575	.9821
141	.2878	.0124	.7369	.4615	.1860	.9106	.6352	.3597	.0843	.8089	.5334	.2580	.9826
144	.2881	.0127	.7373	.4619	.1864	.9110	.6356	.3602	.0847	.8093	.5339	.2585	.9830
147	.2885	.0131	.7376	.4622	.1868	.9114	.6360	.3606	.0852	.8098	.5343	.2589	.9835
431150	48.2888	50.0134	51.7380	53.4626	55.1872	56.9118	58.6364	60.3610	62.0856	62.8102	65.5348	67.2594	68.9840
153	.2891	.0137	.7384	.4630	.1876	.9122	.6368	.3614	.0860	.8106	.5353	.2599	.9845
156	.2895	.0141	.7387	.4633	.1880	.9126	.6372	.3618	.0865	.8111	.5357	.2603	.9850
159	.2898	.0144	.7391	.4637	.1884	.9130	.6376	.3623	.0869	.8115	.5362	.2608	.9854
162	.2901	.0148	.7394	.4641	.1887	.9134	.6380	.3627	.0873	.8120	.5366	.2613	.9859
431165	48.2905	50.0151	51.7398	53.4645	55.1891	56.9138	58.6384	60.3631	62.0878	63.8124	65.5371	67.2617	68.9864
168	.2908	.0155	.7402	.4648	.1895	.9142	.6388	.3635	.0882	.8129	.5375	.2622	.9869
171	.2912	.0158	.7405	.4652	.1899	.9146	.6393	.3639	.0886	.8133	.5380	.2627	.9874
174	.2915	.0162	.7409	.4656	.1903	.9150	.6397	.3644	.0891	.8138	.5384	.2631	.9878
177	.2918	.0165	.7412	.4659	.1907	.9154	.6401	.3648	.0895	.8142	.5389	.2636	.9883
431180	48.2922	50.0169	51.7416	53.4663	55.1910	56.9158	58.6405	60.3652	62.0899	63.8146	65.5394	67.2641	68.9888
183	.2925	.0172	.7420	.4667	.1914	.9162	.6409	.3656	.0904	.8151	.5398	.2645	.9893
186	.2928	.0176	.7423	.4671	.1918	.9166	.6413	.3660	.0908	.8155	.5403	.2650	.9898
189	.2932	.0179	.7427	.4674	.1922	.9169	.6417	.3665	.0912	.8160	.5407	.2655	.9902
192	.2935	.0183	.7430	.4678	.1926	.9173	.6421	.3669	.0916	.8164	.5412	.2660	.9907
431195	48.2938	50.0186	51.7434	53.4682	55.1930	56.9177	58.6425	60.3673	62.0921	63.8169	65.5416	67.2664	68.9912
198	.2942	.0190	.7438	.4686	.1933	.9181	.6429	.3677	.0925	.8173	.5421	.2669	.9917
201	.2945	.0193	.7441	.4689	.1937	.9185	.6433	.3681	.0929	.8177	.5426	.2674	.9922
204	.2948	.0197	.7445	.4693	.1941	.9189	.6437	.3686	.0934	.8182	.5430	.2678	.9926
207	.2952	.0200	.7448	.4697	.1945	.9193	.6442	.3690	.0938	.8186	.5435	.2683	.9931
431210	48.2955	50.0204	51.7452	53.4700	55.1949	56.9197	58.6446	60.3694	62.0942	63.8191	65.5439	67.2688	68.9936
213	.2959	.0207	.7456	.4704	.1953	.9201	.6450	.3698	.0947	.8195	.5444	.2692	.9941
216	.2962	.0211	.7459	.4708	.1956	.9205	.6454	.3702	.0951	.8200	.5448	.2697	.9946
219	.2965	.0214	.7463	.4712	.1960	.9209	.6458	.3707	.0955	.8204	.5453	.2702	.9950
222	.2969	.0218	.7466	.4715	.1964	.9213	.6462	.3711	.0960	.8209	.5457	.2706	.9955
431225	48.2972	50.0221	51.7470	53.4719	55.1968	56.9217	58.6466	60.3715	62.0964	63.8213	65.5462	67.2711	68.9960
228	.2975	.0224	.7474	.4723	.1972	.9221	.6470	.3719	.0968	.8217	.5467	.2716	.9965
231	.2979	.0228	.7477	.4726	.1976	.9225	.6474	.3723	.0973	.8222	.5471	.2720	.9970
234	.2982	.0231	.7481	.4730	.1980	.9229	.6478	.3728	.0977	.8226	.5476	.2725	.9974
237	.2985	.0235	.7484	.4734	.1983	.9233	.6482	.3732	.0981	.8231	.5480	.2730	.9979
431240	48.2989	50.0238	51.7488	53.4738	55.1987	56.9237	58.6486	60.3736	62.0986	63.8235	65.5485	67.2734	68.9984
243	.2992	.0242	.7492	.4741	.1991	.9241	.6490	.3740	.0990	.8240	.5489	.2739	.9989
246	.2996	.0245	.7495	.4745	.1995	.9245	.6495	.3744	.0994	.8244	.5494	.2744	.9994
249	.2999	.0249	.7499	.4749	.1999	.9249	.6499	.3749	.0999	.8249	.5498	.2748	.9998
252	.3002	.0252	.7502	.4752	.2003	.9253	.6503	.3753	.1003	.8253	.5503	.2753	69.0003
431255	48.3006	50.0256	51.7506	53.4756	55.2006	56.9257	58.6507	60.3757	62.1007	63.8257	65.5508	67.2758	69.0008
258	.3009	.0259	.7510	.4760	.2010	.9261	.6511	.3761	.1012	.8262	.5512	.2762	.0013
261	.3012	.0263	.7513	.4764	.2014	.9265	.6515	.3765	.1016	.8266	.5517	.2767	.0018
264	.3016	.0266	.7517	.4767	.2018	.9268	.6519	.3770	.1020	.8271	.5521	.2772	.0022
267	.3019	.0270	.7520	.4771	.2022	.9272	.6523	.3774	.1024	.8275	.5526	.2777	.0027
431270	48.3022	50.0273	51.7524	53.4775	55.2026	56.9276	58.6527	60.3778	62.1029	63.8280	65.5530	67.2781	69.0032
273	.3026	.0277	.7528	.4779	.2029	.9280	.6531	.3782	.1033	.8284	.5535	.2786	.0037
276	.3029	.0280	.7531	.4782	.2033	.9284	.6535	.3786	.1037	.8288	.5540	.2791	.0042
279	.3032	.0284	.7535	.4786	.2037	.9288	.6539	.3791	.1042	.8293	.5544	.2795	.0046
282	.3036	.0287	.7538	.4790	.2041	.9292	.6544	.3795	.1046	.8297	.5549	.2800	.0051
431285	48.3039	50.0291	51.7542	53.4793	55.2045	56.9296	58.6548	60.3799	62.1050	63.8302	65.5553	67.2805	69.0056
288	.3043	.0294	.7546	.4797	.2049	.9300	.6552	.3803	.1055	.8306	.5558	.2809	.0061
291	.3046	.0298	.7549	.4801	.2052	.9304	.6556	.3807	.1059	.8311	.5562	.2814	.0066
294	.3049	.0301	.7553	.4805	.2056	.9308	.6560	.3812	.1063	.8315	.5567	.2819	.0070
297	.3053	.0305	.7556	.4808	.2060	.9312	.6564	.3816	.1068	.8320	.5571	.2823	.0075
431300	48.3056	50.0308	51.7560	53.4812	55.2064	56.9316	58.6568	60.3820	62.1072	63.8324	65.5576	67.2828	69.0080

MEGACYCLES PER SECOND

H A R M O N I C S

BASIC FREQ.	164	168	172	176	180	184	188	192	200	208	216	224	232
431000	70.6840	72.4080	74.1320	75.8560	77.5800	79.3040	81.0280	82.7520	86.2000	89.6480	93.0960	96.5440	99.9920
003	.6845	.4085	.1325	.8565	.5805	.3046	.0286	.7526	.2006	.6486	.0966	.5447	.9927
006	.6850	.4090	.1330	.8571	.5811	.3051	.0291	.7532	.2012	.6492	.0973	.5453	.9934
009	.6855	.4095	.1335	.8576	.5816	.3057	.0297	.7537	.2018	.6499	.0979	.5460	.9941
012	.6860	.4100	.1341	.8581	.5822	.3062	.0303	.7543	.2024	.6505	.0986	.5467	.9948
431015	70.6865	72.4105	74.1346	75.8586	77.5827	79.3068	81.0308	82.7549	86.2030	89.6511	93.0992	96.5474	99.9955
018	.6870	.4110	.1351	.8592	.5832	.3073	.0314	.7555	.2036	.6517	.0999	.5480	9962
021	.6874	.4115	.1356	.8597	.5838	.3079	.0319	.7560	.2042	.6524	.1005	.5487	.9969
024	.6879	.4120	.1361	.8602	.5843	.3084	.0325	.7566	.2048	.6530	.1012	.5494	.9976
027	.6884	.4125	.1366	.8608	.5849	.3090	.0331	.7572	.2054	.6536	.1018	.5500	.9983
431030	70.6889	72.4130	74.1372	75.8613	77.5854	79.3095	81.0336	82.7578	86.2060	89.6542	93.1025	96.5507	99.9990
033	.6894	.4135	.1377	.8618	.5859	.3101	.0342	.7583	.2066	.6549	.1031	.5514	.9997
036	.6899	.4140	.1382	.8623	.5865	.3106	.0348	.7589	.2072	.6555	.1038	.5521	100.0004
039	.6904	.4146	.1387	.8629	.5870	.3112	.0353	.7595	.2078	.6561	.1044	.5527	.0010
042	.6909	.4151	.1392	.8634	.5876	.3117	.0359	.7601	.2084	.6567	.1051	.5534	.0017
431045	70.6914	72.4156	74.1397	75.8639	77.5881	79.3123	81.0365	82.7606	86.2090	89.6574	93.1057	96.5541	100.0024
048	.6919	.4161	.1403	.8644	.5886	.3128	.0370	.7612	.2096	.6580	.1064	.5548	.0031
051	.6924	.4166	.1408	.8650	.5892	.3134	.0376	.7618	.2102	.6586	.1070	.5554	.0038
054	.6929	.4171	.1413	.8655	.5897	.3139	.0382	.7624	.2108	.6592	.1077	.5561	.0045
057	.6933	.4176	.1418	.8660	.5903	.3145	.0387	.7629	.2114	.6599	.1083	.5568	.0052
431060	70.6938	72.4181	74.1423	75.8666	77.5908	79.3150	81.0393	82.7635	86.2120	89.6605	93.1090	96.5574	100.0059
063	.6943	.4186	.1428	.8671	.5913	.3156	.0398	.7641	.2126	.6611	.1096	.5581	.0066
066	.6948	.4191	.1434	.8676	.5919	.3161	.0404	.7647	.2132	.6617	.1103	.5588	.0073
069	.6953	.4196	.1439	.8681	.5924	.3167	.0410	.7652	.2138	.6624	.1109	.5595	.0080
072	.6958	.4201	.1444	.8687	.5930	.3172	.0415	.7658	.2144	.6630	.1116	.5601	.0087
431075	70.6963	72.4206	74.1449	75.8692	77.5935	79.3178	81.0421	82.7664	86.2150	89.6636	93.1122	96.5608	100.0094
078	.6968	.4211	.1454	.8697	.5940	.3184	.0427	.7670	.2156	.6642	.1128	.5615	.0101
081	.6973	.4216	.1459	.8703	.5946	.3189	.0432	.7676	.2162	.6648	.1135	.5621	.0108
084	.6978	.4221	.1464	.8708	.5951	.3195	.0438	.7681	.2168	.6655	.1141	.5628	.0115
087	.6983	.4226	.1470	.8713	.5957	.3200	.0444	.7687	.2174	.6661	.1148	.5635	.0122
431090	70.6988	72.4231	74.1475	75.8718	77.5962	79.3206	81.0449	82.7693	86.2180	89.6667	93.1154	96.5642	100.0129
093	.6993	.4236	.1480	.8724	.5967	.3211	.0455	.7699	.2186	.6673	.1161	.5648	.0136
096	.6997	.4241	.1485	.8729	.5973	.3217	.0460	.7704	.2192	.6680	.1167	.5655	.0143
099	.7002	.4246	.1490	.8734	.5978	.3222	.0466	.7710	.2198	.6686	.1174	.5662	.0150
102	.7007	.4251	.1495	.8740	.5984	.3228	.0472	.7716	.2204	.6692	.1180	.5668	.0157
431105	70.7012	72.4256	74.1401	75.8745	77.5989	79.3233	81.0477	82.7722	86.2210	89.6698	93.1187	96.5675	100.0164
108	.7017	.4261	.1506	.8750	.5994	.3239	.0483	.7727	.2216	.6705	.1193	.5682	.0171
111	.7022	.4266	.1511	.8755	.6000	.3244	.0489	.7733	.2222	.6711	.1200	.5689	.0178
114	.7027	.4272	.1516	.8761	.6005	.3250	.0494	.7739	.2228	.6717	.1206	.5695	.0184
117	.7032	.4277	.1521	.8766	.6011	.3255	.0500	.7745	.2234	.6723	.1213	.5702	.0191
431120	70.7037	72.4282	74.1526	75.8771	77.6016	79.3261	81.0506	82.7750	86.2240	89.6730	93.1219	96.5709	100.0198
123	.7042	.4287	.1532	.8776	.6021	.3266	.0511	.7756	.2246	.6736	.1226	.5716	.0205
126	.7047	.4292	.1537	.8782	.6027	.3272	.0517	.7762	.2252	.6742	.1232	.5722	.0212
129	.7052	.4297	.1542	.8787	.6032	.3277	.0523	.7768	.2258	.6748	.1239	.5729	.0219
132	.7056	.4302	.1547	.8792	.6038	.3283	.0528	.7773	.2264	.6755	.1245	.5736	.0226
431135	70.7061	72.4307	74.1552	75.8798	77.6043	79.3288	81.0534	82.7779	86.2270	89.6761	93.1252	96.5742	100.0233
138	.7066	.4312	.1557	.8803	.6048	.3294	.0539	.7785	.2276	.6767	.1258	.5749	.0240
141	.7071	.4317	.1563	.8808	.6054	.3299	.0545	.7791	.2282	.6773	.1265	.5756	.0247
144	.7076	.4322	.1568	.8813	.6059	.3305	.0551	.7796	.2288	.6780	.1271	.5763	.0254
147	.7081	.4327	.1573	.8819	.6065	.3310	.0556	.7802	.2294	.6786	.1278	.5769	.0261
431150	70.7086	72.4332	74.1578	75.8824	77.6070	79.3316	81.0562	82.7808	86.2300	89.6792	93.1284	96.5776	100.0268
153	.7091	.4337	.1583	.8829	.6075	.3322	.0568	.7814	.2306	.6798	.1290	.5783	.0275
156	.7096	.4342	.1588	.8835	.6081	.3327	.0573	.7820	.2312	.6804	.1297	.5789	.0282
159	.7101	.4347	.1593	.8840	.6086	.3333	.0579	.7825	.2318	.6811	.1303	.5796	.0289
162	.7106	.4352	.1599	.8845	.6092	.3338	.0585	.7831	.2324	.6817	.1310	.5803	.0296
431165	70.7111	72.4357	74.1604	75.8850	77.6097	79.3344	81.0590	82.7837	86.2330	89.6823	93.1316	96.5810	100.0303
168	.7116	.4362	.1609	.8856	.6102	.3349	.0596	.7843	.2336	.6829	.1323	.5816	.0310
171	.7120	.4367	.1614	.8861	.6108	.3355	.0601	.7848	.2342	.6836	.1329	.5823	.0317
174	.7125	.4372	.1619	.8866	.6113	.3360	.0607	.7854	.2348	.6842	.1336	.5830	.0324
177	.7130	.4377	.1624	.8872	.6119	.3366	.0613	.7860	.2354	.6848	.1342	.5836	.0331
431180	70.7135	72.4382	74.1630	75.8877	77.6124	79.3371	81.0618	82.7866	86.2360	89.6854	93.1349	96.5843	100.0338
183	.7140	.4387	.1635	.8882	.6129	.3377	.0624	.7871	.2366	.6861	.1355	.5850	.0345
186	.7145	.4392	.1640	.8887	.6135	.3382	.0630	.7877	.2372	.6867	.1362	.5857	.0352
189	.7150	.4398	.1645	.8893	.6140	.3388	.0635	.7883	.2378	.6873	.1368	.5863	.0358
192	.7155	.4403	.1650	.8898	.6146	.3393	.0641	.7889	.2384	.6879	.1375	.5870	.0365
431195	70.7160	72.4408	74.1655	75.8903	77.6151	79.3399	81.0647	82.7894	86.2390	89.6886	93.1381	96.5877	100.0372
198	.7165	.4413	.1661	.8908	.6156	.3404	.0652	.7900	.2396	.6892	.1388	.5884	.0379
201	.7170	.4418	.1666	.8914	.6162	.3410	.0658	.7906	.2402	.6898	.1394	.5890	.0386
204	.7175	.4423	.1671	.8919	.6167	.3415	.0664	.7912	.2408	.6904	.1401	.5897	.0393
207	.7179	.4428	.1676	.8924	.6173	.3421	.0669	.7917	.2414	.6911	.1407	.5904	.0400
431210	70.7184	72.4433	74.1681	75.8930	77.6178	79.3426	81.0675	82.7923	86.2420	89.6917	93.1414	96.5910	100.0407
213	.7189	.4438	.1686	.8935	.6183	.3432	.0680	.7929	.2426	.6923	.1420	.5917	.0414
216	.7194	.4443	.1692	.8940	.6189	.3437	.0686	.7935	.2432	.6929	.1427	.5924	.0421
219	.7199	.4448	.1697	.8945	.6194	.3443	.0692	.7940	.2438	.6936	.1433	.5931	.0428
222	.7204	.4453	.1702	.8951	.6200	.3448	.0697	.7946	.2444	.6942	.1440	.5937	.0435
431225	70.7209	72.4458	74.1707	75.8956	77.6205	79.3454	81.0703	82.7952	86.2450	89.6948	93.1446	96.5944	100.0442
228	.7214	.4463	.1712	.8961	.6210	.3460	.0709	.7958	.2456	.6954	.1452	.5951	.0449
231	.7219	.4468	.1717	.8967	.6216	.3465	.0714	.7964	.2462	.6960	.1459	.5957	.0456
234	.7224	.4473	.1722	.8972	.6221	.3471	.0720	.7969	.2468	.6967	.1465	.5964	.0463
237	.7229	.4478	.1728	.8977	.6227	.3476	.0726	.7975	.2474	.6973	.1472	.5971	.0470
431240	70.7234	72.4483	74.1733	75.8982	77.6232	79.3482	81.0731	82.7981	86.2480	89.6979	93.1478	96.5978	100.0477
243	.7239	.4488	.1738	.8988	.6237	.3487	.0737	.7987	.2486	.6985	.1485	.5984	.0484
246	.7243	.4493	.1743	.8993	.6243	.3493	.0742	.7992	.2492	.6992	.1491	.5991	.0491
249	.7248	.4498	.1748	.8998	.6248	.3498	.0748	.7998	.2498	.6998	.1498	.5998	.0498
252	.7253	.4503	.1753	.9004	.6254	.3504	.0754	.8004	.2504	.7004	.1504	.6004	.0505
431255	70.7258	72.4508	74.1759	75.9009	77.6259	79.3509	81.0759	82.8010	86.2510	89.7010	93.1511	96.6011	100.0512
258	.7263	.4513	.1764	.9014	.6264	.3515	.0765	.8015	.2516	.7017	.1517	.6018	.0519
261	.7268	.4518	.1769	.9019	.6270	.3520	.0771	.8021	.2522	.7023	.1524	.6025	.0526
264	.7273	.4524	.1774	.9025	.6275	.3526	.0776	.8027	.2528	.7029	.1530	.6031	.0532
267	.7278	.4529	.1779	.9030	.6281	.3531	.0782	.8033	.2534	.7035	.1537	.6038	.0539
431270	70.7283	72.4534	74.1784	75.9035	77.6286	79.3537	81.0788	82.8038	86.2540	89.7042	93.1543	96.6045	100.0546
273	.7288	.4539	.1790	.9040	.6291	.3542	.0793	.8044	.2546	.7048	.1550	.6052	.0553
276	.7293	.4544	.1795	.9046	.6297	.3548	.0799	.8050	.2552	.7054	.1556	.6058	.0560
279	.7298	.4549	.1800	.9051	.6302	.3553	.0805	.8056	.2558	.7060	.1563	.6065	.0567
282	.7302	.4554	.1805	.9056	.6308	.3559	.0810	.8061	.2564	.7067	.1569	.6072	.0574
431285	70.7307	72.4559	74.1810	75.9062	77.6313	79.3564	81.0816	82.8067	86.2570	89.7073	93.1576	96.6078	100.0581
288	.7312	.4564	.1815	.9067	.6318	.3570	.0821	.8073	.2576	.7079	.1582	.6085	.0588
291	.7317	.4569	.1821	.9072	.6324	.3575	.0827	.8079	.2582	.7085	.1589	.6092	.0595
294	.7322	.4574	.1826	.9077	.6329	.3581	.0833	.8084	.2588	.7092	.1595	.6099	.0602
297	.7327	.4579	.1831	.9083	.6335	.3586	.0838	.8090	.2594	.7098	.1602	.6105	.0609
431300	70.7332	72.4584	74.1836	75.9088	77.6340	79.3592	81.0844	82.8096	86.2600	89.7104	93.1608	96.6112	100.0616

HARMONICS

BASIC FREQ.	112	116	120	124	128	132	136	140	144	148	152	156	160
431300	48.3056	50.0308	51.7560	53.4812	55.2064	56.9316	58.6568	60.3820	62.1072	63.8324	65.5576	67.2828	69.0080
303	.3059	.0311	.7564	.4816	.2068	.9320	.6572	.3824	.1076	.8328	.5581	.2833	.0085
306	.3063	.0315	.7567	.4819	.2072	.9324	.6576	.3828	.1081	.8333	.5585	.2837	.0090
309	.3066	.0318	.7571	.4823	.2076	.9328	.6580	.3833	.1085	.8337	.5590	.2842	.0094
312	.3069	.0322	.7574	.4827	.2079	.9332	.6584	.3837	.1089	.8342	.5594	.2847	.0099
431315	48.3073	50.0325	51.7578	53.4831	55.2083	56.9336	58.6588	60.3841	62.1094	63.8346	65.5599	67.2851	69.0104
318	.3076	.0329	.7582	.4834	.2087	.9340	.6592	.3845	.1098	.8351	.5603	.2856	.0109
321	.3080	.0332	.7585	.4838	.2091	.9344	.6597	.3849	.1102	.8355	.5608	.2861	.0114
324	.3083	.0336	.7589	.4842	.2095	.9348	.6601	.3854	.1107	.8360	.5612	.2865	.0118
327	.3086	.0339	.7592	.4845	.2099	.9352	.6605	.3858	.1111	.8364	.5617	.2870	.0123
431330	48.3090	50.0343	51.7596	53.4849	55.2102	56.9356	58.6609	60.3862	62.1115	63.8368	65.5622	67·2875	69.0128
333	.3093	.0346	.7600	.4853	.2106	.9360	.6613	.3866	.1120	.8373	.5626	.2879	.0133
336	.3096	.0350	.7603	.4857	.2110	.9364	.6617	.3870	.1124	.8377	.5631	.2884	.0138
339	.3100	.0353	.7607	.4860	.2114	.9367	.6621	.3875	.1128	.8382	.5635	.2889	.0142
342	.3103	.0357	.7610	.4864	.2118	.9371	.6625	.3879	.1132	.8386	.5640	.2894	.0147
431345	48.3106	50.0360	51.7614	53.4868	55.2122	56.9375	58.6629	60.3883	62.1137	63.8391	65.5644	67.2898	69.0152
348	.3110	.0364	.7618	.4872	.2125	.9379	.6633	.3887	.1141	.8395	.5649	.2903	.0157
351	.3113	.0367	.7621	.4875	.2129	.9383	.6637	.3891	.1145	.8399	.5654	.2908	.0162
354	.3116	.0371	.7625	.4879	.2133	.9387	.6641	.3896	.1150	.8404	.5658	.2912	.0166
357	.3120	.0374	.7628	.4883	.2137	.9391	.6646	.3900	.1154	.8408	.5663	.2917	.0171
431360	48.3123	50.0378	51.7632	53.4886	55.2141	56.9395	58.6650	60.3904	62.1158	63.8413	65.5667	67.2922	69.0176
363	.3127	.0381	.7636	.4890	.2145	.9399	.6654	.3908	.1163	.8417	.5672	.2926	.0181
366	.3130	.0385	.7639	.4894	.2148	.9403	.6658	.3912	.1167	.8422	.5676	.2931	.0186
369	.3133	.0388	.7643	.4898	.2152	.9407	.6662	.3917	.1171	.8426	.5681	.2936	.0190
372	.3137	.0392	.7646	.4901	.2156	.9411	.6666	.3921	.1176	.8431	.5685	.2940	.0195
431375	48.3140	50.0395	51.7650	53.4905	55.2160	56.9415	58.6670	60.3925	62.1180	63.8435	65.5690	67.2945	69.0200
378	.3143	.0398	.7654	.4909	.2164	.9419	.6674	.3929	.1184	.8439	.5695	.2950	.0205
381	.3147	.0402	.7657	.4912	.2168	.9423	.6678	.3933	.1189	.8444	.5699	.2954	.0210
384	.3150	.0405	.7661	.4916	.2172	.9427	.6682	.3938	.1193	.8448	.5704	.2959	.0214
387	.3153	.0409	.7664	.4920	.2175	.9431	.6686	.3942	.1197	.8453	.5708	.2964	.0219
431390	48.3157	50.0412	51.7668	53.4924	55.2179	56.9435	58.6690	60.3946	62.1202	63.8457	65.5713	67.2968	69.0224
393	.3160	.0416	.7672	.4927	.2183	.9439	.6694	.3950	.1206	.8462	.5717	.2973	.0229
396	.3164	.0419	.7675	.4931	.2187	.9443	.6699	.3954	.1210	.8466	.5722	.2978	.0234
399	.3167	.0423	.7679	.4935	.2191	.9447	.6703	.3959	.1215	.8471	.5726	.2982	.0238
402	.3170	.0426	.7682	.4938	.2195	.9451	.6707	.3963	.1219	.8475	.5731	.2987	.0243
431405	48.3174	50.0430	51.7686	53.4942	55.2198	56.9455	58.6711	60.3967	62.1223	63.8479	65.5736	67.2992	69.0248
408	.3177	.0433	.7690	.4946	.2202	.9459	.6715	.3971	.1228	.8484	.5740	.2996	.0253
411	.3180	.0437	.7693	.4950	.2206	.9463	.6719	.3975	.1232	.8488	.5745	.3001	.0258
414	.3184	.0440	.7697	.4953	.2210	.9466	.6723	.3980	.1236	.8493	.5749	.3006	.0262
417	.3187	.0444	.7700	.4957	.2214	.9470	.6727	.3984	.1240	.8497	.5754	.3011	.0267
431420	48.3190	50.0447	51.7704	53.4961	55.2218	56.9474	58.6731	60.3988	62.1245	63.8502	65.5758	67.3015	69.0272
423	.3194	.0451	.7708	.4965	.2221	.9478	.6735	.3992	.1249	.8506	.5763	.3020	.0277
426	.3197	.0454	.7711	.4968	.2225	.9482	.6739	.3996	.1253	.8510	.5768	.3025	.0282
429	.3200	.0458	.7715	.4972	.2229	.9486	.6743	.4001	.1258	.8515	.5772	.3029	.0286
432	.3204	.0461	.7718	.4976	.2233	.9490	.6748	.4005	.1262	.8519	.5777	.3034	.0291
431435	48.3207	50.0465	51.7722	53.4979	55.2237	56.9494	58.6752	60.4009	62.1266	63.8524	65.5781	67.3039	69.0296
438	.3211	.0468	.7726	.4983	.2241	.9498	.6756	.4013	.1271	.8528	.5786	.3043	.0301
441	.3214	.0472	.7729	.4987	.2244	.9502	.6760	.4017	.1275	.8533	.5790	.3048	.0306
444	.3217	.0475	.7733	.4991	.2248	.9506	.6764	.4022	.1279	.8537	.5795	.3053	.0310
447	.3221	.0479	.7736	.4994	.2252	.9510	.6768	.4026	.1284	.8542	.5799	.3057	.0315
431450	48.3224	50.0482	51.7740	53.4998	55.2256	56.9514	58.6772	60.4030	62.1288	63.8546	65.5804	67.3062	69.0320
453	.3227	.0485	.7744	.5002	.2260	.9518	.6776	.4034	.1292	.8550	.5809	.3067	.0325
456	.3231	.0489	.7747	.5005	.2264	.9522	.6780	.4038	.1297	.8555	.5813	.3071	.0330
459	.3234	.0492	.7751	.5009	.2268	.9526	.6784	.4043	.1301	.8559	.5818	.3076	.0334
462	.3237	.0496	.7754	.5013	.2271	.9530	.6788	.4047	.1305	.8564	.5822	.3081	.0339
431465	48.3241	50.0499	51.7758	53.5017	55.2275	56.9534	58.6792	60.4051	62.1310	63.8568	65.5827	67.3085	69.0344
468	.3244	.0503	.7762	.5020	.2279	.9538	.6796	.4055	.1314	.8573	.5831	.3090	.0349
471	.3248	.0506	.7765	.5024	.2283	.9542	.6801	.4059	.1318	.8577	.5836	.3095	.0354
474	.3251	.0510	.7769	.5028	.2287	.9546	.6805	.4064	.1323	.8582	.5840	.3099	.0358
477	.3254	.0513	.7772	.5031	.2291	.9550	.6809	.4068	.1327	.8586	.5845	.3104	.0363
431480	48.3258	50.0517	51.7776	53.5035	55.2294	56.9554	58.6813	60.4072	62.1331	63.8590	65.5850	67.3109	69.0368
483	.3261	.0520	.7780	.5039	.2298	.9558	.6817	.4076	.1336	.8595	.5854	.3113	.0373
486	.3264	.0524	.7783	.5043	.2302	.9562	.6821	.4080	.1340	.8599	.5859	.3118	.0378
489	.3268	.0527	.7787	.5046	.2306	.9565	.6825	.4085	.1344	.8604	.5863	.3123	.0382
492	.3271	.0531	.7790	.5050	.2310	.9569	.6829	.4089	.1348	.8608	.5868	.3128	.0387
431495	48.3274	50.0534	51.7794	53.5054	55.2314	56.9573	58.6833	60.4093	62.1353	63.8613	65.5872	67.3132	69.0392
498	.3278	.0538	.7798	.5058	.2317	.9577	.6837	.4097	.1357	.8617	.5877	.3137	.0397
501	.3281	.0541	.7801	.5061	.2321	.9581	.6841	.4101	.1361	.8621	.5882	.3142	.0402
504	.3284	.0545	.7805	.5065	.2325	.9585	.6845	.4106	.1366	.8626	.5886	.3146	.0406
507	.3288	.0548	.7808	.5069	.2329	.9589	.6850	.4110	.1370	.8630	.5891	.3151	.0411
431510	48.3291	50.0552	51.7812	53.5072	55.2333	56.9593	58.6854	60.4114	62.1374	63.8635	65.5895	67.3156	69.0416
513	.3295	.0555	.7816	.5076	.2337	.9597	.6858	.4118	.1379	.8639	.5900	.3160	.0421
516	.3298	.0559	.7819	.5080	.2340	.9601	.6862	.4122	.1383	.8644	.5904	.3165	.0426
519	.3301	.0562	.7823	.5084	.2344	.9605	.6866	.4127	.1387	.8648	.5909	.3170	.0430
522	.3305	.0566	.7826	.5087	.2348	.9609	.6870	.4131	.1392	.8653	.5913	.3174	.0435
431525	48.3308	50.0569	51.7830	53.5091	55.2352	56.9613	58.6874	60.4135	62.1396	63.8657	65.5918	67.3179	69.0440
528	.3311	.0572	.7834	.5095	.2356	.9617	.6878	.4139	.1400	.8661	.5923	.3184	.0445
531	.3315	.0576	.7837	.5098	.2360	.9621	.6882	.4143	.1405	.8666	.5927	.3188	.0450
534	.3318	.0579	.7841	.5102	.2364	.9625	.6886	.4148	.1409	.8670	.5932	.3193	.0454
537	.3321	.0583	.7844	.5106	.2367	.9629	.6890	.4152	.1413	.8675	.5936	.3198	.0459
431540	48.3325	50.0586	51.7848	53.5110	55.2371	56.9633	58.6894	60.4156	62.1418	63.8679	65.5941	67.3202	69.0464
543	.3328	.0590	.7852	.5113	.2375	.9637	.6898	.4160	.1422	.8684	.5945	.3207	.0469
546	.3332	.0593	.7855	.5117	.2379	.9641	.6903	.4164	.1426	.8688	.5950	.3212	.0474
549	.3335	.0597	.7859	.5121	.2383	.9645	.6907	.4169	.1431	.8693	.5954	.3216	.0478
552	.3338	.0600	.7862	.5124	.2387	.9649	.6911	.4173	.1435	.8697	.5959	.3221	.0483
431555	48.3342	50.0604	51.7866	53.5128	55.2390	56.9653	58.6915	60.4177	62.1439	63.8701	65.5964	67.3226	69.0488
558	.3345	.0607	.7870	.5132	.2394	.9657	.6919	.4181	.1444	.8706	.5968	.3230	.0493
561	.3348	.0611	.7873	.5136	.2398	.9661	.6923	.4185	.1448	.8710	.5973	.3235	.0498
564	.3352	.0614	.7877	.5139	.2402	.9664	.6927	.4190	.1452	.8715	.5977	.3240	.0502
567	.3355	.0618	.7880	.5143	.2406	.9668	.6931	.4194	.1456	.8719	.5982	.3245	.0507
431570	48.3358	50.0621	51.7884	53.5147	55.2410	56.9672	58.6935	60.4198	62.1461	63.8724	65.5986	67.3249	69.0512
573	.3362	.0625	.7888	.5151	.2413	.9676	.6939	.4202	.1465	.8728	.5991	.3254	.0517
576	.3365	.0628	.7891	.5154	.2417	.9680	.6943	.4206	.1469	.8732	.5996	.3259	.0522
579	.3368	.0632	.7895	.5158	.2421	.9684	.6947	.4211	.1474	.8737	.6000	.3263	.0526
582	.3372	.0635	.7898	.5162	.2425	.9688	.6952	.4215	.1478	.8741	.6005	.3268	.0531
431585	48.3375	50.0639	51.7902	53.5165	55.2429	56.9692	58.6956	60.4219	62.1482	63.8746	65.6009	67.3273	69.0536
588	.3379	.0642	.7906	.5169	.2433	.9696	.6960	.4223	.1487	.8750	.6014	.3277	.0541
591	.3382	.0646	.7909	.5173	.2436	.9700	.6964	.4227	.1491	.8755	.6018	.3282	.0546
594	.3385	.0649	.7913	.5177	.2440	.9704	.6968	.4232	.1495	.8759	.6023	.3287	.0550
597	.3389	.0653	.7916	.5180	.2444	.9708	.6972	.4236	.1500	.8764	.6027	.3291	.0555
431600	48.3392	50.0656	51.7920	53.5184	55.2448	56.9712	58.6976	60.4240	62.1504	63.8768	65.6032	67.3296	69.0560

MEGACYCLES PER SECOND

H A R M O N I C S

BASIC FREQ.	164	168	172	176	180	184	188	192	200	208	216	224	232
431300	70.7332	72.4584	74.1836	75.9088	77.6340	79.3592	81.0844	82.8096	86.2600	89.7104	93.1608	96.6112	100.0616
303	.7337	.4589	.1841	.9093	.6345	.3598	.0850	.8102	.2606	.7110	.1614	.6119	.0623
306	.7342	.4594	.1846	.9099	.6351	.3603	.0855	.8108	.2612	.7116	.1621	.6125	.0630
309	.7347	.4599	.1851	.9104	.6356	.3609	.0861	.8113	.2618	.7123	.1627	.6132	.0637
312	.7352	.4604	.1857	.9109	.6362	.3614	.0867	.8119	.2624	.7129	.1634	.6139	.0644
431315	70.7357	72.4609	74.1862	75.9114	77.6367	79.3620	81.0872	82.8125	86.2630	89.7135	93.1640	96.6146	100.0651
318	.7362	.4614	.1867	.9120	.6372	.3625	.0878	.8131	.2636	.7141	.1647	.6152	.0658
321	.7366	.4619	.1872	.9125	.6378	.3631	.0883	.8136	.2642	.7148	.1653	.6159	.0665
324	.7371	.4624	.1877	.9130	.6383	.3636	.0889	.8142	.2648	.7154	.1660	.6166	.0672
327	.7376	.4629	.1882	.9136	.6389	.3642	.0895	.8148	.2654	.7160	.1666	.6172	.0679
431330	70.7381	72.4634	74.1888	75.9141	77.6394	79.3647	81.0900	82.8154	86.2660	89.7166	93.1673	96.6179	100.0686
333	.7386	.4639	.1893	.9146	.6399	.3653	.0906	.8159	.2666	.7173	.1679	.6186	.0693
336	.7391	.4644	.1898	.9151	.6405	.3658	.0912	.8165	.2672	.7179	.1686	.6193	.0700
339	.7396	.4650	.1903	.9157	.6410	.3664	.0917	.8171	.2678	.7185	.1692	.6199	.0706
342	.7401	.4655	.1908	.9162	.6416	.3669	.0923	.8177	.2684	.7191	.1699	.6206	.0713
431345	70.7406	72.4660	74.1913	75.9167	77.6421	79.3675	81.0929	82.8182	86.2690	89.7198	93.1705	96.6213	100.0720
348	.7411	.4665	.1919	.9172	.6426	.3680	.0934	.8188	.2696	.7204	.1712	.6220	.0727
351	.7416	.4670	.1924	.9178	.6432	.3686	.0940	.8194	.2702	.7210	.1718	.6226	.0734
354	.7421	.4675	.1929	.9183	.6437	.3691	.0946	.8200	.2708	.7216	.1725	.6233	.0741
357	.7425	.4680	.1934	.9188	.6443	.3697	.0951	.8205	.2714	.7223	.1731	.6240	.0748
431360	70.7430	72.4685	74.1939	75.9194	77.6448	79.3702	81.0957	82.8211	86.2720	89.7229	93.1738	96.6246	100.0755
363	.7435	.4690	.1944	.9199	.6453	.3708	.0962	.8217	.2726	.7235	.1744	.6253	.0762
366	.7440	.4695	.1950	.9204	.6459	.3713	.0968	.8223	.2732	.7241	.1751	.6260	.0769
369	.7445	.4700	.1955	.9209	.6464	.3719	.0974	.8228	.2738	.7248	.1757	.6267	.0776
372	.7450	.4705	.1960	.9215	.6470	.3724	.0979	.8234	.2744	.7254	.1764	.6273	.0783
431375	70.7455	72.4710	74.1965	75.9220	77.6475	79.3730	81.0985	82.8240	86.2750	89.7260	93.1770	96.6280	100.0790
378	.7460	.4715	.1970	.9225	.6480	.3736	.0991	.8246	.2756	.7266	.1776	.6287	.0797
381	.7465	.4720	.1975	.9231	.6486	.3741	.0996	.8252	.2762	.7272	.1783	.6293	.0804
384	.7470	.4725	.1980	.9236	.6491	.3747	.1002	.8257	.2768	.7279	.1789	.6300	.0811
387	.7475	.4730	.1986	.9241	.6497	.3752	.1008	.8263	.2774	.7285	.1796	.6307	.0818
431390	70.7480	72.4735	74.1991	75.9246	77.6502	79.3758	81.1013	82.8269	86.2780	89.7291	93.1802	96.6314	100.0825
393	.7485	.4740	.1996	.9252	.6507	.3763	.1019	.8275	.2786	.7297	.1809	.6320	.0832
396	.7489	.4745	.2001	.9257	.6513	.3769	.1024	.8280	.2792	.7304	.1815	.6327	.0839
399	.7494	.4750	.2006	.9262	.6518	.3774	.1030	.8286	.2798	.7310	.1822	.6334	.0846
402	.7499	.4755	.2011	.9268	.6524	.3780	.1036	.8292	.2804	.7316	.1828	.6340	.0853
431405	70.7504	72.4760	74.2017	75.9273	77.6529	79.3785	81.1041	82.8298	86.2810	89.7322	93.1835	96.6347	100.0860
408	.7509	.4765	.2022	.9278	.6534	.3791	.1047	.8303	.2816	.7329	.1841	.6354	.0867
411	.7514	.4770	.2027	.9283	.6540	.3796	.1053	.8309	.2822	.7335	.1848	.6361	.0874
414	.7519	.4776	.2032	.9289	.6545	.3802	.1058	.8315	.2828	.7341	.1854	.6367	.0880
417	.7524	.4781	.2037	.9294	.6551	.3807	.1064	.8321	.2834	.7347	.1861	.6374	.0887
431420	70.7529	72.4786	74.2042	75.9299	77.6556	79.3813	81.1070	82.8326	86.2840	89.7354	93.1867	96.6381	100.0894
423	.7534	.4791	.2048	.9304	.6561	.3818	.1075	.8332	.2846	.7360	.1874	.6388	.0901
426	.7539	.4796	.2053	.9310	.6567	.3824	.1081	.8338	.2852	.7366	.1880	.6394	.0908
429	.7544	.4801	.2058	.9315	.6572	.3829	.1087	.8344	.2858	.7372	.1887	.6401	.0915
432	.7548	.4806	.2063	.9320	.6578	.3835	.1092	.8349	.2864	.7379	.1893	.6408	.0922
431435	70.7553	72.4811	74.2068	75.9326	77.6583	79.3840	81.1098	82.8355	86.2870	89.7385	93.1900	96.6414	100.0929
438	.7558	.4816	.2073	.9331	.6588	.3846	.1103	.8361	.2876	.7391	.1906	.6421	.0936
441	.7563	.4821	.2079	.9336	.6594	.3851	.1109	.8367	.2882	.7397	.1913	.6428	.0943
444	.7568	.4826	.2084	.9341	.6599	.3857	.1115	.8372	.2888	.7404	.1919	.6435	.0950
447	.7573	.4831	.2089	.9347	.6605	.3862	.1120	.8378	.2894	.7410	.1926	.6441	.0957
431450	70.7578	72.4836	74.2094	75.9352	77.6610	79.3868	81.1126	82.8384	86.2900	89.7416	93.1932	96.6448	100.0964
453	.7583	.4841	.2099	.9357	.6615	.3874	.1132	.8390	.2906	.7422	.1938	.6455	.0971
456	.7588	.4846	.2104	.9363	.6621	.3879	.1137	.8396	.2912	.7428	.1945	.6461	.0978
459	.7593	.4851	.2109	.9368	.6626	.3885	.1143	.8401	.2918	.7435	.1951	.6468	.0985
462	.7598	.4856	.2115	.9373	.6632	.3890	.1149	.8407	.2924	.7441	.1958	.6475	.0992
431465	70.7603	72.4861	74.2120	75.9378	77.6637	79.3896	81.1154	82.8413	86.2930	89.7447	93.1964	96.6482	100.0999
468	.7608	.4866	.2125	.9384	.6642	.3901	.1160	.8419	.2936	.7453	.1971	.6488	.1006
471	.7612	.4871	.2130	.9389	.6648	.3907	.1165	.8424	.2942	.7460	.1977	.6495	.1013
474	.7617	.4876	.2135	.9394	.6653	.3912	.1171	.8430	.2948	.7466	.1984	.6502	.1020
477	.7622	.4881	.2140	.9400	.6659	.3918	.1177	.8436	.2954	.7472	.1990	.6508	.1027
431480	70.7627	72.4886	74.2146	75.9405	77.6664	79.3923	81.1182	82.8442	86.2960	89.7478	93.1997	96.6515	100.1034
483	.7632	.4891	.2151	.9410	.6669	.3929	.1188	.8447	.2966	.7485	.2003	.6522	.1041
486	.7367	.4896	.2156	.9415	.6675	.3934	.1194	.8453	.2972	.7491	.2010	.6529	.1048
489	.7642	.4902	.2161	.9421	.6680	.3940	.1199	.8459	.2978	.7497	.2016	.6535	.1054
492	.7647	.4907	.2166	.9426	.6686	.3945	.1205	.8465	.2984	.7503	.2023	.6542	.1061
431495	70.7652	72.4912	74.2171	75.9431	77.6691	79.3951	81.1211	82.8470	86.2990	89.7510	93.2029	96.6549	100.1068
498	.7657	.4917	.2177	.9436	.6696	.3956	.1216	.8476	.2996	.7516	.2036	.6556	.1075
501	.7662	.4922	.2182	.9442	.6702	.3962	.1222	.8482	.3002	.7522	.2042	.6562	.1082
504	.7667	.4927	.2187	.9447	.6707	.3967	.1228	.8488	.3008	.7528	.2049	.6569	.1089
507	.7671	.4932	.2192	.9452	.6713	.3973	.1233	.8493	.3014	.7535	.2055	.6576	.1096
431510	70.7676	72.4937	74.2197	75.9458	77.6718	79.3978	81.1239	82.8499	86.3020	89.7541	93.2062	96.6582	100.1103
513	.7681	.4942	.2202	.9463	.6723	.3984	.1244	.8505	.3026	.7547	.2068	.6589	.1110
516	.7686	.4947	.2208	.9468	.6729	.3989	.1250	.8511	.3032	.7553	.2075	.6596	.1117
519	.7691	.4952	.2213	.9473	.6734	.3995	.1256	.8516	.3038	.7560	.2081	.6603	.1124
522	.7696	.4957	.2218	.9479	.6740	.4000	.1261	.8522	.3044	.7566	.2088	.6609	.1131
431525	70.7701	72.4962	74.2223	75.9484	77.6745	79.4006	81.1267	82.8528	86.3050	89.7572	93.2094	96.6616	100.1138
528	.7706	.4967	.2228	.9489	.6750	.4012	.1273	.8534	.3056	.7578	.2100	.6623	.1145
531	.7711	.4972	.2233	.9495	.6756	.4017	.1278	.8540	.3062	.7584	.2107	.6629	.1152
534	.7716	.4977	.2238	.9500	.6761	.4023	.1284	.8545	.3068	.7591	.2113	.6636	.1159
537	.7721	.4982	.2244	.9505	.6767	.4028	.1290	.8551	.3074	.7597	.2120	.6643	.1166
431540	70.7726	72.4987	74.2249	75.9510	77.6772	79.4034	81.1295	82.8557	86.3080	89.7603	93.2126	96.6650	100.1173
543	.7731	.4992	.2254	.9516	.6777	.4039	.1301	.8563	.3086	.7609	.2133	.6656	.1180
546	.7735	.4997	.2259	.9521	.6783	.4045	.1306	.8568	.3092	.7616	.2139	.6663	.1187
549	.7740	.5002	.2264	.9526	.6788	.4050	.1312	.8574	.3098	.7622	.2146	.6670	.1194
552	.7745	.5007	.2269	.9532	.6794	.4056	.1318	.8580	.3104	.7628	.2152	.6676	.1201
431555	70.7750	72.5012	74.2275	75.9537	77.6799	79.4061	81.1323	82.8586	86.3110	89.7634	93.2159	96.6683	100.1208
558	.7755	.5017	.2280	.9542	.6804	.4067	.1329	.8591	.3116	.7641	.2165	.6690	.1215
561	.7760	.5022	.2285	.9547	.6810	.4072	.1335	.8597	.3122	.7647	.2172	.6697	.1222
564	.7765	.5028	.2290	.9553	.6815	.4078	.1340	.8603	.3128	.7653	.2178	.6703	.1228
567	.7770	.5033	.2295	.9558	.6821	.4083	.1346	.8609	.3134	.7659	.2185	.6710	.1235
431570	70.7775	72.5038	74.2300	75.9563	77.6826	79.4089	81.1352	82.8614	86.3140	89.7666	93.2191	96.6717	100.1242
573	.7780	.5043	.2306	.9568	.6831	.4094	.1357	.8620	.3146	.7672	.2198	.6724	.1249
576	.7785	.5048	.2311	.9574	.6837	.4100	.1363	.8626	.3152	.7678	.2204	.6730	.1256
579	.7790	.5053	.2316	.9579	.6842	.4105	.1369	.8632	.3158	.7684	.2211	.6737	.1263
582	.7794	.5058	.2321	.9584	.6848	.4111	.1374	.8637	.3164	.7691	.2217	.6744	.1270
431585	70.7799	72.5063	74.2326	75.9590	77.6853	79.4116	81.1380	82.8643	86.3170	89.7697	93.2224	96.6750	100.1277
588	.7804	.5068	.2331	.9595	.6858	.4122	.1385	.8649	.3176	.7703	.2230	.6757	.1284
591	.7809	.5073	.2337	.9600	.6864	.4127	.1391	.8655	.3182	.7709	.2237	.6764	.1291
594	.7814	.5078	.2342	.9605	.6869	.4133	.1397	.8660	.3188	.7716	.2243	.6771	.1298
597	.7819	.5083	.2347	.9611	.6875	.4138	.1402	.8666	.3194	.7722	.2250	.6777	.1305
431600	70.7824	72.5088	74.2352	75.9616	77.6880	79.4144	81.1408	82.8672	86.3200	89.7728	93.2256	96.6784	100.1312

HARMONICS

BASIC FREQ.	112	116	120	124	128	132	136	140	144	148	152	156	160
431600	48.3392	50.0656	51.7920	53.5184	55.2448	56.9712	58.6976	60.4240	62.1504	63.8768	65.6032	67.3296	69.0560
603	.3395	.0659	.7924	.5188	.2452	.9716	.6980	.4244	.1508	.8772	.6037	.3301	.0565
606	.3399	.0663	.7927	.5191	.2456	.9720	.6984	.4248	.1513	.8777	.6041	.3305	.0570
609	.3402	.0666	.7931	.5195	.2460	.9724	.6988	.4253	.1517	.8781	.6046	.3310	.0574
612	.3405	.0670	.7934	.5199	.2463	.9728	.6992	.4257	.1521	.8786	.6050	.3315	.0579
431615	48.3409	50.0673	51.7938	53.5203	55.2467	56.9732	58.6996	60.4261	62.1526	63.8790	65.6055	67.3319	69.0584
618	.3412	.0677	.7942	.5206	.2471	.9736	.7000	.4265	.1530	.8795	.6059	.3324	.0589
621	.3416	.0680	.7945	.5210	.2475	.9740	.7005	.4269	.1534	.8799	.6064	.3329	.0594
624	.3419	.0684	.7949	.5214	.2479	.9744	.7009	.4274	.1539	.8804	.6068	.3333	.0598
627	.3422	.0687	.7952	.5217	.2483	.9748	.7013	.4278	.1543	.8808	.6073	.3338	.0603
431630	48.3426	50.0691	51.7956	53.5221	55.2486	56.9752	58.7017	60.4282	62.1547	63.8812	65.6078	67.3343	69.0608
633	.3429	.0694	.7960	.5225	.2490	.9756	.7021	.4286	.1552	.8817	.6082	.3347	.0613
636	.3432	.0698	.7963	.5229	.2494	.9760	.7025	.4290	.1556	.8821	.6087	.3352	.0618
639	.3436	.0701	.7967	.5232	.2498	.9763	.7029	.4295	.1560	.8826	.6091	.3357	.0622
642	.3439	.0705	.7970	.5236	.2502	.9767	.7033	.4299	.1564	.8830	.6096	.3362	.0627
431645	48.3442	50.0708	51.7974	53.5240	55.2506	56.9771	58.7037	60.4303	62.1569	63.8835	65.6100	67.3366	69.0632
648	.3446	.0712	.7978	.5244	.2509	.9775	.7041	.4307	.1573	.8839	.6105	.3371	.0637
651	.3449	.0715	.7981	.5247	.2513	.9779	.7045	.4311	.1577	.8843	.6110	.3376	.0642
654	.3452	.0719	.7985	.5251	.2517	.9783	.7049	.4316	.1582	.8848	.6114	.3380	.0646
657	.3456	.0722	.7988	.5255	.2521	.9787	.7054	.4320	.1586	.8852	.6119	.3385	.0651
431660	48.3459	50.0726	51.7992	53.5258	55.2525	56.9791	58.7058	60.4324	62.1590	63.8857	65.6123	67.3390	69.0656
663	.3463	.0729	.7996	.5262	.2529	.9795	.7062	.4328	.1595	.8861	.6128	.3394	.0661
666	.3466	.0733	.7999	.5266	.2532	.9799	.7066	.4332	.1599	.8866	.6132	.3399	.0666
669	.3469	.0736	.8003	.5270	.2536	.9803	.7070	.4337	.1603	.8870	.6137	.3404	.0670
672	.3473	.0740	.8006	.5273	.2540	.9807	.7074	.4341	.1608	.8875	.6141	.3408	.0675
431675	48.3476	50.0743	51.8010	53.5277	55.2544	56.9811	58.7078	60.4345	62.1612	63.8879	65.6146	67.3413	69.0680
678	.3479	.0746	.8014	.5281	.2548	.9815	.7082	.4349	.1616	.8883	.6151	.3418	.0685
681	.3483	.0750	.8017	.5284	.2552	.9819	.7086	.4353	.1621	.8888	.6155	.3422	.0690
684	.3486	.0753	.8021	.5288	.2556	.9823	.7090	.4358	.1625	.8892	.6160	.3427	.0694
687	.3489	.0757	.8024	.5292	.2559	.9827	.7094	.4362	.1629	.8897	.6164	.3432	.0699
431690	48.3493	50.0760	51.8028	53.5296	55.2563	56.9831	58.7098	60.4366	62.1634	63.8901	65.6169	67.3436	69.0704
693	.3496	.0764	.8032	.5299	.2567	.9835	.7102	.4370	.1638	.8906	.6173	.3441	.0709
696	.3500	.0767	.8035	.5303	.2571	.9839	.7107	.4374	.1642	.8910	.6178	.3446	.0714
699	.3503	.0771	.8039	.5307	.2575	.9843	.7111	.4379	.1647	.8915	.6182	.3450	.0718
702	.3506	.0774	.8042	.5310	.2579	.9847	.7115	.4383	.1651	.8919	.6187	.3455	.0723
431705	48.3510	50.0778	51.8046	53.5314	55.2582	56.9851	58.7119	60.4387	62.1655	63.8923	65.6192	67.3460	69.0728
708	.3513	.0781	.8050	.5318	.2586	.9855	.7123	.4391	.1660	.8928	.6196	.3464	.0733
711	.3516	.0785	.8053	.5322	.2590	.9859	.7127	.4395	.1664	.8932	.6201	.3469	.0738
714	.3520	.0788	.8057	.5325	.2594	.9862	.7131	.4400	.1668	.8937	.6205	.3474	.0742
717	.3523	.0792	.8060	.5329	.2598	.9866	.7135	.4404	.1672	.8941	.6210	.3479	.0747
431720	48.3526	50.0795	51.8064	53.5333	55.2602	56.9870	58.7139	60.4408	62.1677	63.8946	65.6214	67.3483	69.0752
723	.3530	.0799	.8068	.5337	.2605	.9874	.7143	.4412	.1681	.8950	.6219	.3488	.0757
726	.3533	.0802	.8071	.5340	.2609	.9878	.7147	.4416	.1685	.8954	.6224	.3493	.0762
729	.3536	.0806	.8075	.5344	.2613	.9882	.7151	.4421	.1690	.8959	.6228	.3497	.0766
732	.3540	.0809	.8078	.5348	.2617	.9886	.7156	.4425	.1694	.8963	.6233	.3502	.0771
431735	48.3543	50.0813	51.8082	53.5351	55.2621	56.9890	58.7160	60.4429	62.1698	63.8968	65.6237	67.3507	69.0776
738	.3547	.0816	.8086	.5355	.2625	.9894	.7164	.4433	.1703	.8972	.6242	.3511	.0781
741	.3550	.0820	.8089	.5359	.2628	.9898	.7168	.4437	.1707	.8977	.6246	.3516	.0786
744	.3553	.0823	.8093	.5363	.2632	.9902	.7172	.4442	.1711	.8981	.6251	.3521	.0790
747	.3557	.0827	.8096	.5366	.2636	.9906	.7176	.4446	.1716	.8986	.6255	.3525	.0795
431750	48.3560	60.0830	51.8100	53.5370	55.2640	56.9910	58.7180	60.4450	62.1720	63.8990	65.6260	67.3530	69.0800
753	.3563	.0833	.8104	.5374	.2644	.9914	.7184	.4454	.1724	.8994	.6265	.3535	.0805
756	.3567	.0837	.8107	.5377	.2648	.9918	.7188	.4458	.1729	.8999	.6269	.3539	.0810
759	.3570	.0840	.8111	.5381	.2652	.9922	.7192	.4463	.1733	.9003	.6274	.3544	.0814
762	.3573	.0844	.8114	.5385	.2655	.9926	.7196	.4467	.1737	.9008	.6278	.3549	.0819
431765	48.3577	50.0847	51.8118	53.5389	55.2659	56.9930	58.7200	60.4471	62.1742	63.9012	65.6283	67.3553	69.0824
768	.3580	.0851	.8122	.5392	.2663	.9934	.7204	.4475	.1746	.9017	.6287	.3558	.0829
771	.3584	.0854	.8125	.5396	.2667	.9938	.7209	.4479	.1750	.9021	.6292	.3563	.0834
774	.3587	.0858	.8129	.5400	.2671	.9942	.7213	.4484	.1755	.9026	.6296	.3567	.0838
777	.3590	.0861	.8132	.5403	.2675	.9946	.7217	.4488	.1759	.9030	.6301	.3572	.0843
431780	48.3594	50.0865	51.8136	53.5407	55.2678	56.9950	58.7221	60.4492	62.1763	63.9034	65.6306	67.3577	69.0848
783	.3597	.0868	.8140	.5411	.2682	.9954	.7225	.4496	.1768	.9039	.6310	.3581	.0853
786	.3600	.0872	.8143	.5415	.2686	.9958	.7229	.4500	.1772	.9043	.6315	.3586	.0858
789	.3604	.0875	.8147	.5418	.2690	.9961	.7233	.4505	.1776	.9048	.6319	.3591	.0862
792	.3607	.0879	.8150	.5422	.2694	.9965	.7237	.4509	.1780	.9052	.6324	.3596	.0867
431795	48.3610	50.0882	51.8154	53.5426	55.2698	56.9969	58.7241	60.4513	62.1785	63.9057	65.6328	67.3600	69.0872
798	.3614	.0886	.8158	.5430	.2701	.9973	.7245	.4517	.1789	.9061	.6333	.3605	.0877
801	.3617	.0889	.8161	.5433	.2705	.9977	.7249	.4521	.1793	.9065	.6338	.3610	.0882
804	.3620	.0893	.8165	.5437	.2709	.9981	.7253	.4526	.1798	.9070	.6342	.3614	.0886
807	.3624	.0896	.8168	.5441	.2713	.9985	.7258	.4530	.1802	.9074	.6347	.3619	.0891
431810	48.3627	50.0900	51.8172	53.5444	55.2717	56.9989	58.7262	60.4534	62.1806	63.9079	65.6351	67.3624	69.0896
813	.3631	.0903	.8176	.5448	.2721	.9993	.7266	.4538	.1811	.9083	.6356	.3628	.0901
816	.3634	.0907	.8179	.5452	.2724	.9997	.7270	.4542	.1815	.9088	.6360	.3633	.0906
819	.3637	.0910	.8183	.5456	.2728	57.0001	.7274	.4547	.1819	.9092	.6365	.3638	.0910
822	.3641	.0914	.8186	.5459	.2732	.0005	.7278	.4551	.1824	.9097	.6369	.3642	.0915
430825	48.3644	50.0917	51.8190	53.5463	55.2736	57.0009	58.7282	60.4555	62.1828	63.9101	65.6374	67.3647	69.0920
828	.3647	.0920	.8194	.5467	.2740	.0013	.7286	.4559	.1832	.9105	.6379	.3652	.0925
831	.3651	.0924	.8197	.5470	.2744	.0017	.7290	.4563	.1837	.9110	.6383	.3656	.0930
834	.3654	.0927	.8201	.5474	.2748	.0021	.7294	.4568	.1841	.9114	.6388	.3661	.0934
837	.3657	.0931	.8204	.5478	.2751	.0025	.7298	.4572	.1845	.9119	.6392	.3666	.0939
431840	48.3661	50.0934	51.8208	53.5482	55.2755	57.0029	58.7302	60.4576	62.1850	63.9123	65.6397	67.3670	69.0944
843	.3664	.0938	.8212	.5485	.2759	.0033	.7306	.4580	.1854	.9128	.6401	.3675	.0949
846	.3668	.0941	.8215	.5489	.2763	.0037	.7311	.4584	.1858	.9132	.6406	.3680	.0954
849	.3671	.0945	.8219	.5493	.2767	.0041	.7315	.4589	.1863	.9137	.6410	.3684	.0958
852	.3674	.0948	.8222	.5496	.2771	.0045	.7319	.4593	.1867	.9141	.6415	.3689	.0963
431855	48.3678	50.0952	51.8226	53.5500	55.2774	57.0049	58.7323	60.4597	62.1871	63.9145	65.6420	67.3694	69.0968
858	.3681	.0955	.8230	.5504	.2778	.0053	.7327	.4601	.1876	.9150	.6424	.3698	.0973
861	.3684	.0959	.8233	.5508	.2782	.0057	.7331	.4605	.1880	.9154	.6429	.3703	.0978
864	.3688	.0962	.8237	.5511	.2786	.0060	.7335	.4610	.1884	.9159	.6433	.3708	.0982
867	.3691	.0966	.8240	.5515	.2790	.0064	.7339	.4614	.1888	.9163	.6438	.3713	.0987
431870	48.3694	50.0969	51.8244	53.5519	55.2794	57.0068	58.7343	60.4618	62.1893	63.9168	65.6442	67.3717	69.0992
873	.3698	.0973	.8248	.5523	.2797	.0072	.7347	.4622	.1897	.9172	.6447	.3722	.0997
876	.3701	.0976	.8251	.5526	.2801	.0076	.7351	.4626	.1901	.9176	.6452	.3727	.1002
879	.3704	.0980	.8255	.5530	.2805	.0080	.7355	.4631	.1906	.9181	.6456	.3731	.1006
882	.3708	.0983	.8258	.5534	.2809	.0084	.7360	.4635	.1910	.9185	.6461	.3736	.1011
431885	48.3711	50.0987	51.8262	53.5537	55.2813	57.0088	58.7364	60.4639	62.1914	63.9190	65.6465	67.3741	69.1016
888	.3715	.0990	.8266	.5541	.2817	.0092	.7368	.4643	.1919	.9194	.6470	.3745	.1021
891	.3718	.0994	.8269	.5545	.2820	.0096	.7372	.4647	.1923	.9199	.6474	.3750	.1026
894	.3721	.0997	.8273	.5549	.2824	.0100	.7376	.4652	.1927	.9203	.6479	.3755	.1030
897	.3725	.1001	.8276	.5552	.2828	.0104	.7380	.4656	.1932	.9208	.6483	.3759	.1035
431900	48.3728	50.1004	51.8280	53.5556	55.2832	57.0108	58.7384	60.4660	62.1936	63.9212	65.6488	67.3764	69.1040

MEGACYCLES PER SECOND

HARMONICS

BASIC FREQ.	164	168	172	176	180	184	188	192	200	208	216	224	232
431600	70.7824	72.5088	74.2352	75.9616	77.6880	79.4144	81.1408	82.8672	86.3200	89.7728	93.2256	96.6784	100.1312
603	.7829	.5093	.2357	.9621	.6885	.4150	.1414	.8678	.3206	.7734	.2262	.6791	.1319
606	.7834	.5098	.2362	.9627	.6891	.4155	.1419	.8684	.3212	.7740	.2269	.6997	.1326
609	.7839	.5103	.2367	.9632	.6896	.4161	.1425	.8689	.3218	.7747	.2275	.6804	.1333
612	.7844	.5108	.2373	.9637	.6902	.4166	.1431	.8695	.3224	.7753	.2282	.6811	.1340
431615	70.7849	72.5113	74.2378	75.9642	77.6907	79.4172	81.1436	82.8701	86.3230	89.7759	93.2288	96.6818	100.1347
618	.7854	.5118	.2383	.9648	.6912	.4177	.1442	.8707	.3236	.7765	.2295	.6824	.1354
621	.7858	.5123	.2388	.9653	.6918	.4183	.1447	.8712	.3242	.7772	.2301	.6831	.1361
624	.7863	.5128	.2393	.9658	.6923	.4188	.1453	.8718	.3248	.7778	.2308	.6838	.1368
627	.7868	.5133	.2398	.9664	.6929	.4194	.1459	.8724	.3254	.7784	.2314	.6844	.1375
431630	70.7873	72.5138	74.2404	75.9669	77.6934	79.4199	81.1464	82.8730	86.3260	89.7790	93.2321	96.6851	100.1382
633	.7878	.5143	.2409	.9674	.6939	.4205	.1470	.8735	.3266	.7797	.2327	.6858	.1389
636	.7883	.5148	.2414	.9679	.6945	.4210	.1476	.8741	.3272	.7803	.2334	.6865	.1396
639	.7888	.5154	.2419	.9685	.6950	.4216	.1481	.8747	.3278	.7809	.2340	.6871	.1402
642	.7893	.5159	.2424	.9690	.6956	.4221	.1487	.8753	.3284	.7815	.2347	.6878	.1409
431645	70.7898	72.5164	74.2429	75.9695	77.6961	79.4227	81.1493	82.8758	86.3290	89.7822	93.2353	96.6885	100.1416
648	.7903	.5169	.2435	.9700	.6966	.4232	.1498	.8764	.3296	.7828	.2360	.6892	.1423
651	.7908	.5174	.2440	.9706	.6972	.4238	.1504	.8770	.3302	.7834	.2366	.6898	.1430
654	.7913	.5179	.2445	.9711	.6977	.4243	.1510	.8776	.3308	.7840	.2373	.6905	.1437
657	.7917	.5184	.2450	.9716	.6983	.4249	.1515	.8781	.3314	.7847	.2379	.6912	.1444
431660	70.7922	72.5189	74.2455	75.9722	77.6988	79.4254	81.1521	82.8787	86.3320	89.7853	93.2386	96.6918	100.1451
663	.7927	.5194	.2460	.9727	.6993	.4260	.1526	.8793	.3326	.7859	.2392	.6925	.1458
666	.7932	.5199	.2466	.9732	.6999	.4265	.1532	.8799	.3332	.7865	.2399	.6932	.1465
669	.7937	.5204	.2471	.9737	.7004	.4271	.1538	.8804	.3338	.7872	.2404	.6939	.1472
672	.7942	.5209	.2476	.9743	.7010	.4276	.1543	.8810	.3344	.7878	.2412	.6945	.1479
431675	70.7947	72.5214	74.2481	75.9748	77.7015	79.4282	81.1549	82.8816	86.3350	89.7884	93.2418	96.6952	100.1486
678	.7952	.5219	.2486	.9753	.7020	.4288	.1555	.8822	.3356	.7890	.2424	.6959	.1493
681	.7957	.5224	.2491	.9759	.7026	.4293	.1560	.8828	.3362	.7896	.2431	.6965	.1500
684	.7962	.5229	.2496	.9764	.7031	.4299	.1566	.8833	.3368	.7903	.2437	.6972	.1507
687	.7967	.5234	.2502	.9769	.7037	.4304	.1572	.8839	.3374	.7909	.2444	.6979	.1514
431690	70.7972	72.5239	74.2507	75.9774	77.7042	79.4310	81.1577	82.8845	86.3380	89.7915	93.2450	96.6986	100.1521
693	.7977	.5244	.2512	.9780	.7047	.4315	.1583	.8851	.3386	.7921	.2457	.6992	.1528
696	.7981	.5249	.2517	.9785	.7053	.4321	.1588	.8856	.3392	.7928	.2463	.6999	.1535
699	.7986	.5254	.2522	.9790	.7058	.4326	.1594	.8862	.3398	.7934	.2470	.7006	.1542
702	.7991	.5259	.2527	.9796	.7064	.4332	.1600	.8868	.3404	.7940	.2476	.7012	.1549
431705	70.7996	72.5264	74.2533	75.9801	77.7069	79.4337	81.1605	82.8874	86.3410	89.7946	93.2483	96.7019	100.1556
708	.8001	.5269	.2538	.9806	.7074	.4343	.1611	.8879	.3416	.7953	.2489	.7026	.1563
711	.8006	.5274	.2543	.9811	.7080	.4348	.1617	.8885	.3422	.7959	.2496	.7033	.1570
714	.8011	.5280	.2548	.9817	.7085	.4354	.1622	.8891	.3428	.7965	.2502	.7039	.1576
717	.8016	.5285	.2553	.9822	.7091	.4359	.1628	.8897	.3434	.7971	.2509	.7046	.1583
431720	70.8021	72.5290	74.2558	75.9827	77.7096	79.4365	81.1634	82.8902	86.3440	89.7978	93.2515	96.7053	100.1590
723	.8026	.5295	.2564	.9832	.7101	.4370	.1639	.8908	.3446	.7984	.2522	.7060	.1597
726	.8031	.5300	.2569	.9838	.7107	.4376	.1645	8914	.3452	.7990	.2528	.7066	.1604
729	.8036	.5305	.2574	.9843	.7112	.4381	.1651	.8920	.3458	.7996	.2535	.7073	.1611
732	.8040	.5310	.2579	.9848	.7118	.4387	.1656	.8925	.3464	.8003	.2541	.7080	.1618
431735	70.8045	72.5315	74.2584	75.9854	77.7123	79.4392	81.1662	82.8931	86.3470	89.8009	93.2548	96.7086	100.1625
738	.8050	.5320	.2589	.9859	.7128	.4398	.1667	.8937	.3476	.8015	.2554	.7093	.1632
741	.8055	.5325	.2595	.9864	.7134	.4403	.1673	.8943	.3482	.8021	.2561	.7100	.1639
744	.8060	.5330	.2600	.9869	.7139	.4409	.1679	.8948	.3488	.8028	.2567	.7107	.1646
747	.8065	.5335	.2605	.9875	.7145	.4414	.1684	.8954	.3494	.8034	.2574	.7113	.1653
431750	70.8070	72.5340	74.2610	75.9880	77.7150	79.4420	81.1690	82.8960	86.3500	89.8040	93.2580	96.7120	100.1660
753	.8075	.5345	.2615	.9885	.7155	.4426	.1696	.8966	.3506	.8046	.2586	.7127	.1667
756	.8080	.5350	.2620	.9891	.7161	.4431	.1701	.8972	.3512	.8052	.2993	.7133	.1674
759	.8085	.5355	.2625	.9896	.7166	.4437	.1707	.8977	.3518	.8059	.2599	.7140	.1681
762	.8090	.5360	.2631	.9901	.7172	.4442	.1713	.8983	.3524	.8065	.2606	.7147	.1688
431765	70.8095	72.5365	74.2636	75.9906	77.7177	79.4448	81.1718	82.8989	86.3530	89.8071	93.2612	96.7154	100.1695
768	.8100	.5370	.2641	.9912	.7182	.4453	.1724	.8995	.3536	.8077	.2619	.7160	.1702
771	.8104	.5375	.2646	.9917	.7188	.4459	.1729	.9000	.3542	.8084	.2625	.7167	.1709
774	.8109	.5380	.2651	.9922	.7193	.4464	.1735	.9006	.3548	.8990	.2632	.7174	.1716
777	.8114	.5385	.2656	.9928	.7199	.4470	.1741	.9012	.3554	.8096	.2638	.7180	.1723
431780	70.8119	72.5390	74.2662	75.9933	77.7204	79.4475	81.1746	82.9018	86.3560	89.8102	93.2645	96.7187	100.1730
783	.8124	.5395	.2667	.9938	.7209	.4481	.1752	.9023	.3566	.8109	.2651	.7194	.1737
786	.8129	.5400	.2672	.9943	.7215	.4486	.1758	.9029	.3572	.8115	.2658	.7201	.1744
789	.8134	.5406	.2677	.9949	.7220	.4492	.1763	.9035	.3578	.8121	.2664	.7207	.1750
792	.8139	.5411	.2682	.9954	.7226	.4497	.1769	.9041	.3584	.8127	.2671	.7214	.1757
431795	70.8144	72.5416	74.2687	75.9959	77.7231	79.4503	81.1775	82.9046	86.3590	89.8134	93.2677	96.7221	100.1764
798	.8149	.5421	.2693	.9964	.7236	.4508	.1780	.9052	.3596	.8140	.2684	.7228	.1771
801	.8154	.5426	.2698	.9970	.7242	.4514	.1786	.9058	.3602	.8146	.2690	.7234	.1778
804	.8159	.5431	.2703	.9975	.7247	.4519	.1792	.9064	.3608	.8152	.2697	.7241	.1785
807	.8163	.5436	.2708	.9980	.7253	.4525	.1797	.9069	.3614	.8159	.2703	.7248	.1992
431810	70.8168	72.5441	74.2713	75.9986	77.7258	79.4530	81.1803	82.9075	86.3620	89.8165	93.2710	96.7254	100.1799
813	.8173	.5446	.2718	.9991	.7263	.4536	.1808	.9081	.3626	.8171	.2716	.7261	.1806
816	.8178	.5451	.2724	.9996	.7269	.4541	.1814	.9087	.3632	.8177	.2723	.7268	.1813
819	.8183	.5456	.2729	76.0001	.7274	.4547	.1820	.9092	.3638	.8184	.2729	.7275	.1820
822	.8188	.5461	.2734	.0007	.7280	.4552	.1825	.9098	.3644	.8190	.2736	.7281	.1827
431825	70.8193	72.5466	74.2739	76.0012	77.7285	79.4558	81.1831	82.9104	86.3650	89.8196	93.2742	96.7288	100.1834
828	.8198	.5471	.2744	.0017	.7290	.4564	.1837	.9110	.3656	.8202	.2748	.7295	.1841
831	.8203	.5476	.2749	.0023	.7296	.4569	.1842	.9116	.3662	.8208	.2755	.7301	.1848
834	.8308	.5481	.2754	.0028	.7301	.4575	.1848	.9121	.3668	.8215	.2761	.7308	.1855
837	.8213	.5486	.2760	.0033	.7307	.4580	.1854	.9127	.3674	.8221	.2768	.7315	.1862
431840	70.8218	72.5491	74.2765	76.0038	77.7312	79.4586	81.1859	82.9133	86.3680	89.8227	93.2774	96.7322	100.1869
843	.8223	.5596	.2770	.0044	.7317	.4591	.1865	.9199	.3686	.8233	.2781	.7328	.1876
846	.8227	.5501	.2775	.0049	.7323	.4997	.1870	.9144	.3692	.8240	.2787	.7335	.1883
849	.8232	.5506	.2780	.0054	.7328	.4602	.1876	.9150	.3698	.8246	.2794	.7342	.1890
852	.8237	.5511	.2785	.0060	.7334	.4608	.1882	.9156	.3704	.8252	.2800	.7348	.1897
431855	70.8242	72.5516	74.2791	76.0065	77.7339	79.4613	81.1887	82.9162	86.3710	89.8258	93.2807	96.7355	100.1904
858	.8247	.5521	.2796	.0070	.7344	.4619	.1893	.9167	.3716	.8265	.2813	.7362	.1911
861	.8252	.5526	.2801	.0075	.7350	.4624	.1899	.9173	.3722	.8271	.2820	.7369	.1918
864	.8257	.5532	.2806	.0081	.7355	.4630	.1904	.9179	.3728	.8277	.2826	.7375	.1924
867	.8262	.5537	.2811	.0086	.7361	.4635	.1910	.9185	.3734	.8283	.2833	.7382	.1931
431870	70.8267	72.5542	74.2816	76.0091	77.7366	79.4641	81.1916	82.9190	86.3740	89.8290	93.2839	96.7389	100.1938
873	.8272	.5547	.2822	.0096	.7371	.4646	.1921	.9196	.3746	.8296	.2846	.7396	.1945
876	.8277	.5552	.2827	.0102	.7377	.4652	.1927	.9202	.3752	.8302	.2852	.7402	.1952
879	.8282	.5557	.2832	.0107	.7382	.4657	.1933	.9208	.3758	.8308	.2859	.7409	.1959
882	.8286	.5562	.2837	.0112	.7388	.4663	.1938	.9213	.3764	.8315	.2865	.7416	.1966
431885	70.8291	72.5567	74.2842	76.0118	77.7393	79.4668	81.1944	82.9219	86.3770	89.8321	93.2872	96.7422	100.1973
888	.8296	.5572	.2847	.0123	7398	.4674	.1949	.9225	.3776	.8327	.2878	.7429	.1980
891	.8301	.5577	.2853	.0128	.7404	.4679	.1955	.9231	.3782	.8333	.2885	.7436	.1987
894	.8306	.5582	.2858	.0133	.7409	.4685	.1961	.9236	.3788	.8340	.2891	.7443	.1994
897	.8311	.5587	.2863	.0139	.7415	.4690	.1966	.9242	.3794	.8346	.2898	.7449	.2001
431900	70.8316	72.5592	74.2868	76.0144	77.7420	79.4696	81.1972	82.9248	86.3800	89.8352	93.2904	96.7456	100.2008

HARMONICS

BASIC FREQ.	112	116	120	124	128	132	136	140	144	148	152	156	160
431900	48.3728	50.1004	51.8280	53.5556	55.2832	57.0108	58.7384	60.4660	62.1936	63.9212	65.6488	67.3764	69.1040
903	.3731	.1007	.8284	.5560	.2836	.0112	.7388	.4664	.1940	.9216	.6493	.3769	.1045
906	.3735	.1011	.8287	.5563	.2840	.0116	.7392	.4668	.1945	.9221	.6497	.3773	.1050
909	.3738	.1014	.8291	.5567	.2844	.0120	.7396	.4673	.1949	.9225	.6502	.3778	.1054
912	.3741	.1018	.8294	.5571	.2847	.0124	.7400	.4677	.1953	.9230	.6506	.3783	.1059
431915	48.3745	50.1021	51.8298	53.5575	55.2851	57.0128	58.7404	60.4681	62.1958	63.9234	65.6511	67.3787	69.1064
918	.3748	.1025	.8302	.5578	.2855	.0132	.7408	.4685	.1962	.9239	.6515	.3792	.1069
921	.3752	.1028	.8305	.5582	.2859	.0136	.7413	.4689	.1966	.9243	.6520	.3797	.1074
924	.3755	.1032	.8309	.5586	.2863	.0140	.7417	.4694	.1971	.9248	.6524	.3801	.1078
927	.3758	.1035	.8312	.5589	.2867	.0144	.7421	.4698	.1975	.9252	.6529	.3806	.1083
431930	48.3762	50.1039	51.8316	53.5593	55.2870	57.0148	58.7425	60.4702	62.1979	63.9256	65.6534	67.3811	69.1088
933	.3765	.1042	.8320	.5597	.2874	.0152	.7429	.4706	.1984	.9261	.6538	.3815	.1093
936	.3768	.1046	.8323	.5601	.2878	.0156	.7433	.4710	.1988	.9265	.6543	.3820	.1098
939	.3772	.1049	.8327	.5604	.2882	.0159	.7437	.4715	.1992	.9270	.6547	.3825	.1102
942	.3775	.1053	.8330	.5608	.2886	.0163	.7441	.4719	.1996	.9274	.6552	.3830	.1107
431945	48.3778	50.1056	51.8334	53.5612	55.2890	57.0167	58.7445	60.4723	62.2001	63.9279	65.6556	67.3834	69.1112
948	.3782	.1060	.8338	.5616	.2893	.0171	.7449	.4727	.2005	.9283	.6561	.3839	.1117
951	.3785	.1063	.8341	.5619	.2897	.0175	.7453	.4731	.2009	.9287	.6566	.3844	.1122
954	.3788	.1067	.8345	.5623	.2901	.0179	.7457	.4736	.2014	.9292	.6570	.3848	.1126
957	.3792	.1070	.8348	.5627	.2905	.0183	.7462	.4740	.2018	.9296	.6575	.3853	.1131
431960	48.3795	50.1074	51.8352	53.5630	55.2909	57.0187	58.7466	60.4744	62.2022	63.9301	65.6579	67.3858	69.1136
963	.3799	.1077	.8356	.5634	.2913	.0191	.7470	.4748	.2027	.9305	.6584	.3862	.1141
966	.3802	.1081	.8359	.5638	.2916	.0195	.7474	.4752	.2031	.9310	.6588	.3867	.1146
969	.3805	.1084	.8363	.5642	.2920	.0199	.7478	.4757	.2035	.9314	.6593	.3872	.1150
972	.3809	.1088	.8366	.5645	.2924	.0203	.7482	.4761	.2040	.9319	.6597	.3876	.1155
431975	48.3812	50.1091	51.8370	53.5649	55.2928	57.0207	58.7486	60.4765	62.2044	63.9323	65.6602	67.3881	69.1160
978	.3815	.1094	.8374	.5653	.2932	.0211	.7490	.4769	.2048	.9327	.6607	.3886	.1165
981	.3819	.1098	.8377	.5656	.2936	.0215	.7494	.4773	.2053	.9332	.6611	.3890	.1170
984	.3822	.1101	.8381	.5660	.2940	.0219	.7498	.4778	.2057	.9336	.6616	.3895	.1174
987	.3825	.1105	.8384	.5664	.2943	.0223	.7502	.4782	.2061	.9341	.6620	.3900	.1179
431990	48.3829	50.1108	51.8388	53.5668	55.2947	57.0227	58.7506	60.4786	62.2066	63.9345	65.6625	67.3904	69.1184
993	.3832	.1112	.8392	.5671	.2951	.0231	.7510	.4790	.2070	.9350	.6629	.3909	.1189
996	.3836	.1115	.8395	.5675	.2955	.0235	.7515	.4794	.2074	.9354	.6634	.3914	.1194
999	.3839	.1119	.8399	.5679	.2959	.0239	.7519	.4799	.2079	.9359	.6638	.3918	.1198
432002	.3842	.1122	.8402	.5682	.2963	.0243	.7523	.4803	.2083	.9363	.6643	.3923	.1203
432005	48.3846	50.1126	51.8406	53.5686	55.2966	57.0247	58.7527	60.4807	62.2087	63.9367	65.6648	67.3928	69.1208
008	.3849	.1129	.8410	.5690	.2970	.0251	.7531	.4811	.2092	.9372	.6652	.3932	.1213
011	.3852	.1133	.8413	.5694	.2974	.0255	.7535	.4815	.2096	.9376	.6657	.3937	.1218
014	.3856	.1136	.8417	.5697	.2978	.0258	.7539	.4820	.2100	.9381	.6661	.3942	.1222
017	.3859	.1140	.8420	.5701	.2982	.0262	.7543	.4824	.2104	.9385	.6666	.3947	.1227
432020	48.3862	50.1143	51.8424	53.5705	55.2986	57.0266	58.7547	60.4828	62.2109	63.9390	65.6670	67.3951	69.1232
023	.3866	.1147	.8428	.5709	.2989	.0270	.7551	.4832	.2113	.9394	.6675	.3956	.1237
026	.3869	.1150	.8431	.5712	.2993	.0274	.7555	.4836	.2117	.9398	.6680	.3961	.1242
029	.3872	.1154	.8435	.5716	.2997	.0278	.7559	.4841	.2122	.9403	.6684	.3965	.1246
032	.3876	.1157	.8438	.5720	.3001	.0282	.7564	.4845	.2126	.9407	.6689	.3970	.1251
432035	48.3879	50.1161	51.8442	53.5723	55.3005	57.0286	58.7568	60.4849	62.2130	63.9412	65.6693	67.2975	69.1256
038	.3883	.1164	.8446	.5727	.3009	.0290	.7572	.4853	.2135	.9416	.6698	.3979	.1261
041	.3886	.1168	.8449	.5731	.3012	.0294	.7576	.4857	.2139	.9421	.6702	.3984	.1266
044	.3889	.1171	.8453	.5735	.3016	.0298	.7580	.4862	.2143	.9425	.6707	.3989	.1270
047	.3893	.1175	.8456	.5738	.3020	.0302	.7584	.4866	.2148	.9430	.6711	.3993	.1275
432050	48.3896	50.1178	51.8460	53.5742	55.3024	57.0306	58.7588	60.4870	62.2152	63.9434	65.6716	67.3998	69.1280
053	.3899	.1181	.8464	.5746	.3028	.0310	.7592	.4874	.2156	.9438	.6721	.4003	.1285
056	.3903	.1185	.8467	.5749	.3032	.0314	.7596	.4878	.2161	.9443	.6725	.4007	.1290
059	.3906	.1188	.8471	.5753	.3036	.0318	.7600	.4883	.2165	.9447	.6730	.4012	.1294
062	.3909	.1192	.8474	.5757	.3039	.0322	.7604	.4887	.2169	.9452	.6734	.4017	.1299
432065	48.3913	50.1195	51.8478	53.5761	55.3043	57.0326	58.7608	60.4891	62.2174	63.9456	65.6739	67.4021	69.1304
068	.3916	.1199	.8482	.5764	.3047	.0330	.7612	.4895	.2178	.9461	.6743	.4026	.1309
071	.3920	.1202	.8485	.5768	.3051	.0334	.7617	.4899	.2182	.9465	.6748	.4031	.1314
074	.3923	.1206	.8489	.5772	.3055	.0338	.7621	.4904	.2187	.9470	.6752	.4035	.1318
077	.3926	.1209	.8492	.5775	.3059	.0342	.7625	.4908	.2191	.9474	.6757	.4040	.1323
432080	48.3930	50.1213	51.8496	53.5779	55.3062	57.0346	58.7629	60.4912	62.2195	63.9478	65.6762	67.4045	69.1328
083	.3933	.1216	.8500	.5783	.3066	.0350	.7633	.4916	.2200	.9483	.6766	.4049	.1333
086	.3936	.1220	.8503	.5787	.3070	.0354	.7637	.4920	.2204	.9487	.6771	.4054	.1338
089	.3940	.1223	.8507	.5790	.3074	.0357	.7641	.4925	.2208	.9492	.6775	.4059	.1342
092	.3943	.1227	.8510	.5794	.3078	.0361	.7645	.4929	.2212	.9496	.6780	.4064	.1347
432095	48.3946	50.1230	51.8514	53.5798	55.3082	57.0365	58.7649	60.4933	62.2217	63.9501	65.6784	67.4068	69.1352
098	.3950	.1234	.8518	.5802	.3085	.0369	.7653	.4937	.2221	.9505	.6789	.4073	.1357
101	.3953	.1237	.8521	.5805	.3089	.0373	.7657	.4941	.2225	.9509	.6794	.4078	.1362
104	.3956	.1241	.8525	.5809	.3093	.0377	.7661	.4946	.2230	.9514	.6798	.4082	.1366
107	.3960	.1244	.8528	.5813	.3097	.0381	.7666	.4950	.2234	.9518	.6803	.4087	.1371
432110	48.3963	50.1248	51.8532	53.5816	55.3101	57.0385	58.7670	60.4954	62.2238	63.9523	65.6807	67.4092	69.1376
113	.3967	.1251	.8536	.5820	.3105	.0389	.7674	.4958	.2243	.9527	.6812	.4096	.1381
116	.3970	.1255	.8539	.5824	.3108	.0393	.7678	.4962	.2247	.9532	.6816	.4101	.1386
119	.3973	.1258	.8543	.5828	.3112	.0397	.7682	.4967	.2251	.9536	.6821	.4106	.1390
122	.3977	.1262	.8546	.5831	.3116	.0401	.7686	.4971	.2256	.9541	.6825	.4110	.1395
432125	48.3980	50.1265	51.8550	53.5835	55.3120	57.0405	58.7690	60.4975	62.2260	63.9545	65.6830	67.4115	69.1400
128	.3983	.1268	.8554	.5839	.3124	.0409	.7694	.4979	.2264	.9549	.6835	.4120	.1405
131	.3987	.1272	.8557	.5842	.3128	.0413	.7698	.4983	.2269	.9554	.6839	.4124	.1410
134	.3990	.1275	.8561	.5846	.3132	.0417	.7702	.4988	.2273	.9558	.6844	.4129	.1414
137	.3993	.1279	.8564	.5850	.3135	.0421	.7706	.4992	.2277	.9563	.6848	.4134	.1419
432140	48.3997	50.1282	51.8568	53.5854	55.3139	57.0425	58.7710	60.4996	62.2282	63.9567	65.6853	67.4138	69.1424
143	.4000	.1286	.8572	.5857	.3143	.0429	.7714	.5000	.2286	.9572	.6857	.4143	.1429
146	.4004	.1289	.8575	.5861	.3147	.0433	.7719	.5004	.2290	.9576	.6862	.4148	.1434
149	.4007	.1293	.8579	.5865	.3151	.0437	.7723	.5009	.2295	.9581	.6866	.4152	.1438
152	.4010	.1296	.8582	.5868	.3155	.0441	.7727	.5013	.2299	.9585	.6871	.4157	.1443
432155	48.4014	50.1300	51.8586	53.5872	55.3158	57.0445	58.7731	60.5017	62.2303	63.9589	65.6876	67.4162	69.1448
158	.4017	.1303	.8590	.5876	.3162	.0449	.7735	.5021	.2308	.9594	.6880	.4166	.1453
161	.4020	.1307	.8593	.5880	.3166	.0453	.7739	.5025	.2312	.9598	.6885	.4171	.1458
164	.4024	.1310	.8597	.5883	.3170	.0456	.7743	.5030	.2316	.9603	.6889	.4176	.1462
167	.4027	.1314	.8600	.5887	.3174	.0460	.7747	.5034	.2320	.9607	.6894	.4181	.1467
432170	48.4030	50.1317	51.8604	53.5891	55.3178	57.0464	58.7751	60.5038	62.2325	63.9612	65.6898	67.4185	69.1472
173	.4034	.1321	.8608	.5895	.3181	.0468	.7755	.5042	.2329	.9616	.6903	.4190	.1477
176	.4037	.1324	.8611	.5898	.3185	.0472	.7759	.5046	.2333	.9620	.6908	.4195	.1482
179	.4040	.1328	.8615	.5902	.3189	.0476	.7763	.5051	.2338	.9625	.6912	.4199	.1486
182	.4044	.1331	.8618	.5906	.3193	.0480	.7768	.5055	.2342	.9629	.6917	.4204	.1491
432185	48.4047	50.1335	51.8622	53.5909	55.3197	57.0484	58.7772	60.5059	62.2346	63.9634	65.6921	67.4209	69.1496
188	.4051	.1338	.8626	.5913	.3201	.0488	.7776	.5063	.2351	.9638	.6926	.4213	.1501
191	.4054	.1342	.8629	.5917	.3204	.0492	.7780	.5067	.2355	.9643	.6930	.4218	.1506
194	.4057	.1345	.8633	.5921	.3208	.0496	.7784	.5072	.2359	.9647	.6935	.4223	.1510
197	.4061	.1349	.8636	.5924	.3212	.0500	.7788	.5076	.2364	.9652	.6939	.4227	.1515
432200	48.4064	50.1352	51.8640	53.5928	55.3216	57.0504	58.7792	60.5080	62.2368	63.9656	65.6944	67.4232	69.1520

MEGACYCLES PER SECOND

H A R M O N I C S

BASIC FREQ.	164	168	172	176	180	184	188	192	200	208	216	224	232
431900	70.8316	72.5592	74.2868	76.0144	77.7420	79.4696	81.1972	82.9248	86.3800	89.8352	93.2904	96.7456	100.2008
903	.8321	.5597	.2873	.0149	.7425	.4702	.1978	.9254	.3806	.8358	.2910	.7463	.2015
906	.8326	.5602	.2878	.0155	.7431	.4707	.1983	.9260	.3812	.8364	.2917	.7469	.2022
909	.8331	.5607	.2883	.0160	.7436	.4713	.1989	.9265	.3818	.8371	.2923	.7476	.2029
912	.8336	.5612	.2889	.0165	.7442	.4718	.1995	.9271	.3824	.8377	.2930	.7483	.2036
431915	70.8341	72.5617	74.2894	76.0170	77.7447	79.4724	81.2000	82.9277	86.3830	89.8383	93.2936	96.7490	100.2043
918	.8346	.5622	.2899	.0176	.7452	.4729	.2006	.9283	.3836	.8389	.2943	.7496	.2050
921	.8350	.5627	.2904	.0181	.7458	.4735	.2011	.9288	.3842	.8396	.2949	.7503	.2057
924	.8355	.5632	.2909	.1086	.7463	.4740	.2017	.9294	.3848	.8402	.2956	.7510	.2064
927	.8360	.5637	.2914	.0192	.7469	.4746	.2023	.9300	.3854	.8408	.2962	.7516	.2017
431930	70.8365	72.5642	74.2920	76.0197	77.7474	79.4751	81.2028	82.9306	86.3860	89.8414	93.2969	96.7523	100.2078
933	.8370	.5647	.2925	.0202	.7479	.4757	.2034	.9311	.3866	.8421	.2975	.7530	.2085
936	.8375	.5652	.2930	.0207	.7485	.4762	.2040	.9317	.3872	.8427	.2982	.7537	.2092
939	.8380	.5658	.2935	.0213	.7490	.4768	.2045	.9323	.3878	.8433	.2988	.7543	.2098
942	.8385	.5663	.2940	.0218	.7496	.4773	.2051	.9329	.3884	.8439	.2995	.7550	.2105
431945	70.8390	72.5668	74.2945	76.0223	77.7501	79.4779	81.2057	82.9334	86.3890	89.8446	93.3001	96.7557	100.2112
948	.8395	.5673	.2951	.0228	.7506	.4784	.2062	.9340	.3896	.8452	.3008	.7564	.2119
951	.8400	.5678	.2956	.0234	.7512	.4790	.2068	.9346	.3902	.8458	.3014	.7570	.2126
954	.8405	.5683	.2961	.0239	.7517	.4795	.2074	.9352	.3908	.8464	.3021	.7577	.2133
957	.8409	.5688	.2966	.0244	.7523	.4801	.2079	.9357	.3914	.8471	.3027	.7584	.2140
431960	70.8414	72.5693	74.2971	76.0250	77.7528	79.4806	81.2085	82.9363	86.3920	89.8477	93.3034	96.7590	100.2147
963	.8419	.5698	.2976	.0255	.7533	.4812	.2090	.9369	.3926	.8483	.3040	.7597	.2154
966	.8424	.5703	.2982	.0260	.7539	.4817	.2096	.9375	.3932	.8489	.3047	.7604	.2161
969	.8429	.5708	.2987	.0265	.7544	.4823	.2102	.9380	.3938	.8496	.3053	.7611	.2168
972	.8434	.5713	.2992	.0271	.7550	.4828	.2107	.9386	.3944	.8502	.3060	.7617	.2175
431975	70.8439	72.5718	74.2997	76.0276	77.7555	79.4834	81.2113	82.9392	86.3950	89.8508	93.3066	96.7624	100.2182
978	.8444	.5723	.3002	.0281	.7560	.4840	.2119	.9398	.3956	.8514	.3072	.7631	.2189
981	.8449	.5728	.3007	.0287	.7566	.4845	.2124	.9404	.3962	.8520	.3079	.7637	.2196
984	.8454	.5733	.3012	.0292	.7571	.4851	.2130	.9409	.3968	.8527	.3085	.7644	.2203
987	.8459	.5738	.3018	.0297	.7577	.4856	.2136	.9415	.3974	.8533	.3092	.7651	.2210
431990	70.8464	72.5743	74.3023	76.0302	77.7582	79.4862	81.2141	82.9421	86.3980	89.8539	93.3098	96.7658	100.2217
993	.8469	.5748	.3028	.0308	.7587	.4867	.2147	.9427	.3986	.8545	.3105	.7664	.2224
996	.8473	.5753	.3033	.0313	.7593	.4873	.2152	.9432	.3992	.8552	.3111	.7671	.2231
999	.8478	.5758	.3038	.0318	.7598	.4878	.2158	.9438	.3998	.8558	.3118	.7678	.2238
432002	.8483	.5763	.3043	.0324	.7604	.4884	.2164	.9444	.4004	.8564	.3124	.7684	.2245
432005	70.8488	72.5768	74.3049	76.0329	77.7609	79.4889	81.2169	82.9450	86.4010	89.8570	93.3131	96.7691	100.2252
008	.8493	.5773	.3054	.0334	.7614	.4895	.2175	.9455	.4016	.8577	.3137	.7698	.2259
011	.8498	.5778	.3059	.0339	.7620	.4900	.2181	.9461	.4022	.8583	.3144	.7705	.2266
014	.8503	.5784	.3064	.0345	.7625	.4906	.2186	.9467	.4028	.8589	.3150	.7711	.2272
017	.8508	.5789	.3069	.0350	.7631	.4911	.2192	.9473	.4034	.8595	.3157	.7718	.2279
432020	70.8513	72.5794	74.3074	76.0355	77.7636	79.4917	81.2198	82.9478	86.4040	89.8602	93.3163	96.7725	100.2286
023	.8518	.5799	.3080	.0360	.7641	.4922	.2203	.9484	.4046	.8608	.3170	.7732	.2293
026	.8523	.5804	.3085	.0366	.7647	.4928	.2209	.9490	.4052	.8614	.3176	.7738	.2300
029	.8528	.5809	.3090	.0371	.7652	.4933	.2215	.9496	.4058	.8620	.3183	.7745	.2307
032	.8532	.5814	.3095	.0376	.7658	.4939	.2220	.9501	.4064	.8627	.3189	.7752	.2314
432035	70.8537	72.5819	74.3100	76.0382	77.7663	79.4944	81.2226	82.9507	86.4070	89.8633	93.3196	96.7758	100.2321
038	.8542	.5824	.3105	.0387	.7668	.4950	.2231	.9513	.4076	.8639	.3202	.7765	.2328
041	.8547	.5829	.3111	.0392	.7674	.4955	.2237	.9519	.4082	.8645	.3209	.7772	.2335
044	.8552	.5834	.3116	.0397	.7679	.4961	.2243	.9524	.4088	.8652	.3215	.7779	.2342
047	.8557	.5839	.3121	.0403	.7685	.4966	.2248	.9530	.4094	.8658	.3222	.7785	.2349
432050	70.8562	72.5844	74.3126	76.0408	77.7690	79.4972	81.2254	82.9536	86.4100	89.8664	93.3228	96.7792	100.2356
053	.8567	.5849	.3131	.0413	.7695	.4978	.2260	.9542	.4106	.8670	.3234	.7799	.2363
056	.8572	.5854	.3136	.0419	.7701	.4983	.2265	.9548	.4112	.8676	.3241	.7805	.2370
059	.8577	.5859	.3141	.0424	.7706	.4989	.2271	.9553	.4118	.8683	.3247	.7812	.2377
062	.8582	.5864	.3147	.0429	.7712	.4994	.2277	.9559	.4124	.8689	.3254	.7819	.2384
432065	70.8587	72.5869	74.3152	76.0434	77.7717	79.5000	81.2282	82.9565	86.4130	89.8695	93.3260	96.7826	100.2391
068	.8592	.5874	.3157	.0440	.7722	.5005	.2288	.9571	.4136	.8701	.3267	.7832	.2398
071	.8596	.5879	.3162	.0445	.7728	.5011	.2293	.9576	.4142	.8708	.3273	.7839	.2405
074	.8601	.5884	.3167	.0450	.7733	.5016	.2299	.9582	.4148	.8714	.3280	.7846	.2412
077	.8606	.5889	.3172	.0456	.7739	.5022	.2305	.9588	.4154	.8720	.3286	.7852	.2419
432080	70.8611	72.5894	74.3178	76.0461	77.7744	79.5027	81.2310	82.9594	86.4160	89.8726	93.3293	96.7859	100.2426
083	.8616	.5899	.3183	.0466	.7749	.5033	.2316	.9599	.4166	.8733	.3299	.7866	.2433
086	.8621	.5904	.3188	.0471	.7755	.5038	.2322	.9605	.4172	.8739	.3306	.7873	.2440
089	.8626	.5910	.3193	.0477	.7760	.5044	.2327	.9611	.4178	.8745	.3312	.7879	.2446
092	.8631	.5915	.3198	.0482	.7766	.5049	.2333	.9617	.4184	.8751	.3319	.7886	.2453
432095	70.8636	72.5920	74.3203	76.0487	77.7771	79.5055	81.2339	82.9622	86.4190	89.8758	93.3325	96.7893	100.2560
098	.8641	.5925	.3209	.0492	.7776	.5060	.2344	.9628	.4196	.8764	.3332	.7900	.2467
101	.8646	.5930	.3214	.0498	.7782	.5066	.2350	.9634	.4202	.8770	.3338	.7906	.2474
104	.8651	.5935	.3219	.0503	.7787	.5071	.2356	.9640	.4208	.8776	.3345	.7913	.2481
107	.8655	.5940	.3224	.0508	.7793	.5077	.2361	.9645	.4214	.8783	.3351	.7920	.2488
432110	70.8660	72.5945	74.3229	76.0514	77.7798	79.5082	81.2367	82.9651	86.4220	89.8789	93.3358	96.7926	100.2495
113	.8665	.5950	.3234	.0519	.7803	.5088	.2372	.9657	.4226	.8795	.3364	.7933	.2502
116	.8670	.5955	.3240	.0524	.7809	.5093	.2378	.9663	.4232	.8801	.3371	.7940	.2509
119	.8675	.5960	.3245	.0529	.7814	.5099	.2384	.9668	.4238	.8808	.3377	.7947	.2516
122	.8680	.5965	.3250	.0535	.7820	.5104	.2389	.9674	.4244	.8814	.3384	.7953	.2523
432125	70.8685	72.5970	74.3255	76.0540	77.7825	79.5110	81.2395	82.9680	86.4250	89.8820	93.3390	96.7960	100.2530
128	.8690	.5975	.3260	.0545	.7830	.5116	.2401	.9686	.4256	.8826	.3396	.7967	.2537
131	.8695	.5980	.3265	.0551	.7836	.5121	.2406	.9692	.4262	.8832	.3403	.7973	.2544
134	.8700	.5985	.3270	.0556	.7841	.5127	.2412	.9697	.4268	.8839	.3409	.7980	.2551
137	.8705	.5990	.3276	.0561	.7847	.5132	.2418	.9703	.4274	.8845	.3416	.7987	.2558
432140	70.8710	72.5995	74.3281	76.0566	77.7852	79.5138	81.2423	82.9709	86.4280	89.8851	93.3422	96.7994	100.2565
143	.8715	.6000	.3286	.0572	.7857	.5143	.2429	.9715	.5286	.8857	.3429	.8000	.2572
146	.8719	.6005	.3291	.0577	.7863	.5149	.2434	.9720	.4292	.8864	.3435	.8007	.2579
149	.8724	.6010	.3296	.0582	.7868	.5154	.2440	.9726	.4298	.8870	.3442	.8014	.2586
152	.8729	.6015	.3301	.0588	.7874	.5160	.2446	.9732	.4304	.8876	.3448	.8020	.2593
432155	70.8734	72.6020	74.3307	76.0593	77.7879	79.5165	81.2451	82.9738	86.4310	89.8882	93.3455	96.8027	100.2600
158	.8739	.6025	.3312	.0598	.7884	.5171	.2457	.9743	.4316	.8889	.3461	.8034	.2607
161	.8744	.6030	.3317	.0603	.7890	.5176	.2463	.9749	.4322	.8895	.3468	.8041	.2614
164	.8749	.6036	.3322	.0609	.7895	.5182	.2468	.9755	.4328	.8901	.3474	.8047	.2620
167	.8754	.6041	.3327	.0614	.7901	.5187	.2474	.9761	.4334	.8907	.3481	.8054	.2627
432170	70.8759	72.6046	74.3332	76.0619	77.7906	79.5193	81.2480	82.9766	86.4340	89.8914	93.3487	96.8061	100.2634
173	.8764	.6051	.3338	.0624	.7911	.5198	.2485	.9772	.4346	.8920	.3494	.8068	.2641
176	.8769	.6056	.3343	.0630	.7917	.5204	.2491	.9778	.4352	.8926	.3500	.8074	.2648
179	.8774	.6061	.3348	.0635	.7922	.5209	.2497	.9784	.4358	.8932	.3507	.8081	.2655
182	.8778	.6066	.3353	.0640	.7928	.5215	.2502	.9789	.4364	.8939	.3513	.8088	.2662
432185	70.8783	72.6071	74.3358	76.0646	77.7933	79.5220	81.2508	82.9795	86.4370	89.8945	93.3520	96.8094	100.2669
188	.8788	.6076	.3363	.0651	.7938	.5226	.2513	.9801	.4376	.8951	.3526	.8101	.2676
191	.8793	.6081	.3369	.0656	.7944	.5231	.2519	.9807	.4382	.8957	.3533	.8108	.2683
194	.8798	.6086	.3374	.0661	.7949	.5237	.2525	.9812	.4388	.8964	.3539	.8115	.2690
197	.8803	.6091	.3379	.0667	.7955	.5242	.2530	.9818	.4394	.8970	.3546	.8121	.2697
432200	70.8808	72.6096	74.3384	76.0672	77.7960	79.5248	81.2536	82.9824	86.4400	89.8976	93.3552	96.8128	100.2704

HARMONICS

BASIC FREQ.	112	116	120	124	128	132	136	140	144	148	152	156	160
432200	48.4064	50.1352	51.8640	53.5928	55.3216	57.0504	58.7792	60.5080	62.2368	63.9656	65.6944	67.4232	69.1520
203	.4067	.1355	.8644	.5932	.3220	.0508	.7796	.5084	.2372	.9660	.6949	.4237	.1525
206	.4071	.1359	.8647	.5935	.3224	.0512	.7800	.5088	.2377	.9665	.6953	.4241	.1530
209	.4074	.1362	.8651	.5939	.3228	.0516	.7804	.5093	.2381	.9669	.6958	.4246	.1534
212	.4077	.1366	.8654	.5943	.3231	.0520	.7808	.5097	.2385	.9674	.6962	.4251	.1539
432215	48.4081	50.1369	51.8658	53.5947	55.3235	57.0524	58.7812	60.5101	62.2390	63.9678	65.6967	67.4255	69.1544
218	.4084	.1373	.8662	.5950	.3239	.0528	.7816	.5105	.2394	.9683	.6971	.4260	.1549
221	.4088	.1376	.8665	.5954	.3243	.0532	.7821	.5109	.2398	.9687	.6976	.4265	.1554
224	.4091	.1380	.8669	.5958	.3247	.0536	.7825	.5114	.2403	.9692	.6980	.4269	.1558
227	.4094	.1383	.8672	.5961	.3251	.0540	.7829	.5118	.2407	.9696	.6985	.4274	.1563
432230	48.4098	50.1387	51.8676	53.5965	55.3254	57.0544	58.7833	60.5122	62.2411	63.9700	65.6990	67.4279	69.1568
233	.4101	.1390	.8680	.5969	.3258	.0548	.7837	.5126	.2416	.9705	.6994	.4283	.1573
236	.4104	.1394	.8683	.5973	.3262	.0552	.7841	.5130	.2420	.9709	.6999	.4288	.1578
239	.4108	.1397	.8687	.5976	.3266	.0555	.7845	.5135	.2424	.9714	.7003	.4293	.1582
242	.4111	.1401	.8690	.5980	.3270	.0559	.7849	.5139	.2428	.9718	.7008	.4298	.1587
432245	48.4114	50.1404	51.8694	53.5984	55.3274	57.0563	58.7853	60.5143	62.2433	63.9723	65.7012	67.4302	69.1592
248	.4118	.1408	.8698	.5988	.3277	.0567	.7857	.5147	.2437	.9727	.7017	.4307	.1597
251	.4121	.1411	.8701	.5991	.3281	.0571	.7861	.5151	.2441	.9731	.7022	.4312	.1602
254	.4124	.1415	.8705	.5995	.3285	.0575	.7865	.5156	.2446	.9736	.7026	.4316	.1606
257	.4128	.1418	.8708	.5999	.3289	.0579	.7870	.5160	.2450	.9740	.7031	.4321	.1611
432260	48.4131	50.1422	51.8712	53.6002	55.3293	57.0583	58.7874	60.5164	62.2454	63.9745	65.7035	67.4326	69.1616
263	.4135	.1425	.8716	.6006	.3297	.0587	.7878	.5168	.2459	.9749	.7040	.4330	.1621
266	.4138	.1429	.8719	.6010	.3300	.0591	.7882	.5172	.2463	.9754	.7044	.4335	.1626
269	.4141	.1432	.8723	.6014	.3304	.0595	.7886	.5177	.2467	.9758	.7049	.4340	.1630
272	.4145	.1436	.8726	.6017	.3308	.0599	.7890	.5181	.2472	.9763	.7053	.4344	.1635
432275	48.4148	50.1439	51.8730	53.6021	55.3312	57.0603	58.7894	60.5185	62.2476	63.9767	65.7058	67.4349	69.1640
278	.4151	.1442	.8734	.6025	.3316	.0607	.7898	.5189	.2480	.9771	.7063	.4354	.1645
281	.4155	.1446	.8737	.6028	.3320	.0611	.7902	.5193	.2485	.9776	.7067	.4358	.1650
284	.4158	.1449	.8741	.6032	.3324	.0615	.7906	.5198	.2489	.9780	.7072	.4363	.1654
287	.4161	.1453	.8744	.6036	.3327	.0619	.7910	.5202	.2493	.9785	.7076	.4368	.1659
432290	48.4165	50.1456	51.8748	53.6040	55.3331	57.0623	58.7914	60.5206	62.2498	63.9789	65.7081	67.4372	69.1664
293	.4168	.1460	.8752	.6043	.3335	.0627	.7918	.5210	.2502	.9794	.7085	.4377	.1669
296	.4172	.1463	.8755	.6047	.3339	.0631	.7923	.5214	.2506	.9798	.7090	.4382	.1674
299	.4175	.1467	.8759	.6051	.3343	.0635	.7927	.5219	.2511	.9803	.7094	.4386	.1678
302	.4178	.1470	.8762	.6054	.3347	.0639	.7931	.5223	.2515	.9807	.7099	.4391	.1683
432305	48.4182	50.1474	51.8766	53.6058	55.3350	57.0643	58.7935	60.5227	62.2519	63.9811	65.7104	67.4396	69.1688
308	.4185	.1477	.8770	.6062	.3354	.0647	.7939	.5231	.2524	.9816	.7108	.4400	.1693
311	.4188	.1481	.8773	.6066	.3358	.0651	.7943	.5235	.2528	.9820	.7113	.4405	.1698
314	.4192	.1484	.8777	.6069	.3362	.0654	.7947	.5240	.2532	.9825	.7117	.4410	.1702
317	.4195	.1488	.8780	.6073	.3366	.0658	.7951	.5244	.2536	.9829	.7122	.4415	.1707
432320	48.4198	50.1491	51.8784	53.6077	55.3370	57.0662	58.7955	60.5248	62.2541	63.9834	65.7126	67.4419	69.1712
323	.4202	.1495	.8788	.6081	.3373	.0666	.7959	.5252	.2545	.9838	.7131	.4424	.1717
326	.4205	.1498	.8791	.6084	.3377	.0670	.7963	.5256	.2549	.9842	.7136	.4429	.1722
329	.4208	.1502	.8795	.6088	.3381	.0674	.7967	.5261	.2554	.9847	.7140	.4433	.1726
332	.4212	.1505	.8798	.6092	.3385	.0678	.7972	.5265	.2558	.9851	.7145	.4438	.1731
432335	48.4215	50.1509	51.8802	53.6095	55.3389	57.0682	58.7976	60.5269	62.2562	63.9856	65.7149	67.4443	69.1736
338	.4219	.1512	.8806	.6099	.3393	.0686	.7980	.5273	.2567	.9860	.7154	.4447	.1741
341	.4222	.1516	.8809	.6103	.3396	.0690	.7984	.5277	.2571	.9865	.7158	.4452	.1746
344	.4225	.1519	.8813	.6107	.3400	.0694	.7988	.5282	.2575	.9869	.7163	.4457	.1750
347	.4229	.1523	.8816	.6110	.3404	.0698	.7992	.5286	.2580	.9874	.7167	.4461	.1755
432350	48.4232	50.1526	51.8820	53.6114	55.3408	57.0702	58.7996	60.5290	62.2584	63.9878	65.7172	67.4466	69.1760
353	.4235	.1529	.8824	.6118	.3412	.0706	.8000	.5294	.2588	.9882	.7177	.4471	.1765
356	.4239	.1533	.8827	.6121	.3416	.0710	.8004	.5298	.2593	.9887	.7181	.4475	.1770
359	.4242	.1536	.8831	.6125	.3420	.0714	.8008	.5303	.2597	.9891	.7186	.4480	.1774
362	.4245	.1540	.8834	.6129	.3423	.0718	.8012	.5307	.2601	.9896	.7190	.4485	.1779
432365	48.4249	50.1543	51.8838	53.6133	55.3427	57.0722	58.8016	60.5311	62.2606	63.9900	65.7195	67.4489	69.1784
368	.4252	.1547	.8842	.6136	.3431	.0726	.8020	.5315	.2610	.9905	.7199	.4494	.1789
371	.4256	.1550	.8845	.6140	.3435	.0730	.8025	.5319	.2614	.9909	.7204	.4499	.1794
374	.4259	.1554	.8849	.6144	.3439	.0734	.8029	.5324	.2619	.9914	.7208	.4503	.1798
377	.4262	.1557	.8852	.6147	.3443	.0738	.8033	.5328	.2623	.9918	.7213	.4508	.1803
432380	48.4266	50.1561	51.8856	53.6151	55.3446	57.0742	58.8037	60.5332	62.2627	63.9922	65.7218	67.4513	69.1808
383	.4269	.1564	.8860	.6155	.3450	.0746	.8041	.5336	.2632	.9927	.7222	.4517	.1813
386	.4272	.1568	.8863	.6159	.3454	.0750	.8045	.5340	.2636	.9931	.7227	.4522	.1818
389	.4276	.1571	.8867	.6162	.3458	.0753	.8049	.5345	.2640	.9936	.7231	.4527	.1822
392	.4279	.1575	.8870	.6166	.3462	.0757	.8053	.5349	.2644	.9940	.7236	.4532	.1827
432395	48.4282	50.1578	51.8874	53.6170	55.3466	57.0761	58.8057	60.5353	62.2649	63.9945	65.7240	67.4536	69.1832
398	.4286	.1582	.8878	.6174	.3469	.0765	.8061	.5357	.2653	.9949	.7245	.4541	.1837
401	.4289	.1585	.8881	.6177	.3473	.0769	.8065	.5361	.2657	.9953	.7250	.4546	.1842
404	.4292	.1589	.8885	.6181	.3477	.0773	.8069	.5366	.2662	.9958	.7254	.4550	.1846
407	.4296	.1592	.8888	.6185	.3481	.0777	.8074	.5370	.2666	.9962	.7259	.4555	.1851
432410	48.4299	50.1596	51.8892	53.6188	55.3485	57.0781	58.8078	60.5374	62.2670	63.9967	65.7263	67.4560	69.1856
413	.4303	.1599	.8896	.6192	.3489	.0785	.8082	.5378	.2675	.9971	.7268	.4564	.1861
416	.4306	.1603	.8899	.6196	.3492	.0789	.8086	.5382	.2679	.9976	.7272	.4569	.1866
419	.4309	.1606	.8903	.6200	.3496	.0793	.8090	.5387	.2683	.9980	.7277	.4574	.1870
422	.4313	.1610	.8906	.6203	.3500	.0797	.8094	.5391	.2688	.9985	.7281	.4578	.1875
432425	48.4316	50.1613	51.8910	53.6207	55.3504	57.0801	58.8098	60.5395	62.2692	63.9989	65.7286	67.4583	69.1880
428	.4319	.1616	.8914	.6211	.3508	.0805	.8102	.5399	.2696	.9993	.7291	.4588	.1885
431	.4323	.1620	.8917	.6214	.3512	.0809	.8106	.5403	.2701	.9998	.7295	.4592	.1890
434	.4326	.1623	.8921	.6128	.3516	.0813	.8110	.5408	.2705	64.0002	.7300	.4597	.1894
437	.4329	.1627	.8924	.6222	.3519	.0817	.8114	.5412	.2709	.0007	.7304	.4602	.1899
432440	48.4333	50.1630	51.8928	53.6226	55.3523	57.0821	58.8118	60.5416	62.2714	64.0011	65.7309	67.4606	69.1904
443	.4336	.1634	.8932	.6229	.3527	.0825	.8122	.5420	.2718	.0016	.7313	.4611	.1909
446	.4340	.1637	.8935	.6233	.3531	.0829	.8127	.5424	.2722	.0020	.7318	.4616	.1914
449	.4343	.1641	.8939	.6237	.3535	.0833	.8131	.5429	.2727	.0025	.7322	.4620	.1918
452	.4346	.1644	.8942	.6240	.3539	.0837	.8135	.5433	.2731	.0029	.7327	.4625	.1923
432455	48.4350	50.1648	51.8946	53.6244	55.3542	57.0841	58.8139	60.5437	62.2735	64.0033	65.7332	67.4630	69.1928
458	.4353	.1651	.8950	.6248	.3546	.0845	.8143	.5441	.2740	.0038	.7336	.4634	.1933
461	.4356	.1655	.8953	.6252	.3550	.0849	.8147	.5445	.2744	.0042	.7341	.4639	.1938
464	.4360	.1658	.8957	.6255	.3554	.0852	.8151	.5450	.2748	.0047	.7345	.4644	.1942
467	.4363	.1662	.8960	.6259	.3558	.0856	.8155	.5454	.2752	.0051	.7350	.4649	.1947
432470	48.4366	50.1665	51.8964	53.6263	55.3562	57.0860	58.8159	60.5458	62.2757	64.0056	65.7354	67.4653	69.1952
473	.4370	.1669	.8968	.6267	.3565	.0864	.8163	.5462	.2761	.0060	.7359	.4658	.1957
476	.4373	.1672	.8971	.6270	.3569	.0868	.8167	.5466	.2765	.0064	.7364	.4663	.1962
479	.4376	.1676	.8975	.6274	.3573	.0872	.8171	.5471	.2770	.0069	.7368	.4667	.1966
482	.4380	.1679	.8978	.6278	.3577	.0876	.8176	.5475	.2774	.0073	.7373	.4672	.1971
432485	48.4383	50.1683	51.8982	53.6281	55.3581	57.0880	58.8180	60.5479	62.2778	64.0078	65.7377	67.4677	69.1976
488	.4387	.1686	.8986	.6285	.3585	.0884	.8184	.5483	.2783	.0082	.7382	.4681	.1981
491	.4390	.1690	.8989	.6289	.3588	.0888	.8188	.5487	.2787	.0087	.7386	.4686	.1986
494	.4393	.1693	.8993	.6293	.3592	.0892	.8192	.5492	.2791	.0091	.7391	.4691	.1990
497	.4397	.1697	.8996	.6296	.3596	.0896	.8196	.5496	.2796	.0096	.7395	.4695	.1995
432500	48.4400	50.1700	51.9000	53.6300	55.3600	57.0900	58.8200	60.5500	62.2800	64.0100	65.7400	67.4700	69.2000

MEGACYCLES PER SECOND

H A R M O N I C S

BASIC FREQ.	164	168	172	176	180	184	188	192	200	208	216	224	232
432200	70.8808	72.6096	74.3384	76.0672	77.7960	79.5248	81.2536	82.9824	86.4400	89.8976	93.3552	96.8128	100.2704
203	.8813	.6101	.3389	.0677	.7965	.5254	.2542	.9830	.4406	.8982	.3558	.8135	.2711
206	.8818	.6106	.3394	.0683	.7971	.5259	.2547	.9836	.4412	.8988	.3565	.8141	.2718
209	.8823	.6111	.3399	.0688	.7976	.5265	.2553	.9841	.4418	.8995	.3571	.8148	.2725
212	.8828	.6116	.3405	.0693	.7982	.5270	.2559	.9847	.4424	.9001	.3578	.8155	.2732
432215	70.8833	72.6121	74.3410	76.0698	77.7987	79.5276	81.2564	82.9853	86.4430	89.9007	93.3584	96.8162	100.2739
218	.8838	.6126	.3415	.0704	.7992	.5281	.2570	.9859	.4436	.9013	.3591	.8168	.2746
221	.8842	.6131	.3420	.0709	.7998	.5287	.2575	.9864	.4442	.9020	.3597	.8175	.2753
224	.8847	.6136	.3425	.0714	.8003	.5292	.2581	.9870	.4448	.9026	.3604	.8182	.2760
227	.8852	.6141	.3430	.0720	.8009	.5298	.2587	.9876	.4454	.9032	.3610	.8188	.2767
432230	70.8857	72.6146	74.3436	76.0725	77.8014	79.5303	81.2592	82.9882	86.4460	89.9038	93.3617	96.8195	100.2774
233	.8862	.6151	.3441	.0730	.8019	.5309	.2598	.9887	.4466	.9045	.3623	.8202	.2781
236	.8867	.6156	.3446	.0735	.8025	.5314	.2604	.9893	.4472	.9051	.3630	.8209	.2788
239	.8872	.6162	.3451	.0741	.8030	.5320	.2609	.9899	.4478	.9057	.3636	.8215	.2794
242	.8877	.6167	.3456	.0746	.8036	.5325	.2615	.9905	.4484	.9063	.3643	.8222	.2801
432245	70.8882	72.6172	74.3461	76.0751	77.8041	79.5331	81.2621	82.9910	86.4490	89.9070	93.3649	96.8229	100.2808
248	.8887	.6177	.3467	.0756	.8046	.5336	.2626	.9916	.4496	.9076	.3656	.8236	.2815
251	.8892	.6182	.3472	.0762	.8052	.5342	.2632	.9922	.4502	.9082	.3662	.8242	.2822
254	.8897	.6187	.3477	.0767	.8057	.5347	.2638	.9928	.4508	.9088	.3669	.8249	.2829
257	.8901	.6192	.3482	.0772	.8063	.5353	.2643	.9933	.4514	.9095	.3675	.8256	.2836
432260	70.8906	72.6197	74.3487	76.0778	77.8068	79.5358	81.2649	82.9939	86.4520	89.9101	93.3682	96.8262	100.2843
263	.8911	.6202	.3492	.0783	.8073	.5364	.2654	.9945	.4526	.9107	.3688	.8269	.2850
266	.8916	.6207	.3498	.0788	.8079	.5369	.2660	.9951	.4532	.9113	.3695	.8276	.2857
269	.8921	.6212	.3503	.0793	.8084	.5375	.2666	.9956	.4538	.9120	.3701	.8283	.2864
272	.8926	.6217	.3508	.0799	.8090	.5380	.2671	.9962	.4544	.9126	.3708	.8289	.2871
432275	70.8931	72.6222	74.3513	76.0804	77.8095	79.5386	81.2677	82.9968	86.4550	89.9132	93.3714	96.8296	100.2878
278	.8936	.6227	.3518	.0809	.8100	.5392	.2683	.9974	.4556	.9138	.3720	.8303	.2885
281	.8941	.6232	.3523	.0815	.8106	.5397	.2688	.9980	.4562	.9144	.3727	.8309	.2892
284	.8946	.6237	.3528	.0820	.8111	.5403	.2694	.9985	.4568	.9151	.3733	.8316	.2899
287	.8951	.6242	.3534	.0825	.8117	.5408	.2700	.9991	.4574	.9157	.3740	.8323	.2906
432290	70.8956	72.6247	74.3539	76.0830	77.8122	79.5414	81.2705	82.9997	86.4580	89.9163	93.3746	96.8330	100.2913
293	.8961	.6252	.3544	.0836	.8127	.5419	.2711	83.0003	.4586	.9169	.3753	.8336	.2920
296	.8965	.6257	.3549	.0841	.8133	.5425	.2716	.0008	.4592	.9176	.3759	.8343	.2927
299	.8970	.6262	.3554	.0846	.8138	.5430	.2722	.0014	.4598	.9182	.3766	.8350	.2934
302	.8975	.6267	.3559	.0852	.8144	.5436	.2728	.0020	.4604	.9188	.3772	.8356	.2941
432305	70.8980	72.6272	74.3565	76.0857	77.8149	79.5441	81.2733	83.0026	86.4610	89.9194	93.3779	96.8363	100.2948
308	.8985	.6277	.3570	.0862	.8154	.5447	.2739	.0031	.4616	.9201	.3785	.8370	.2955
311	.8990	.6282	.3575	.0867	.8160	.5452	.2745	.0037	.4622	.9207	.3792	.8377	.2962
314	.8995	.6288	.3580	.0873	.8165	.5458	.2750	.0043	.4628	.9213	.3798	.8383	.2968
317	.9000	.6293	.3585	.0878	.8171	.5463	.2756	.0049	.4634	.9219	.3805	.8390	.2975
432320	70.9005	72.6298	74.3590	76.0883	77.8176	79.5469	81.2762	83.0054	86.4640	89.9226	93.3811	96.8397	100.2982
323	.9010	.6303	.3596	.0888	.8181	.5474	.2767	.0060	.4646	.9232	.3818	.8404	.2989
326	.9015	.6308	.3601	.0894	.8187	.5480	.2773	.0066	.4652	.9238	.3824	.8410	.2996
329	.9020	.6313	.3606	.0899	.8192	.5485	.2779	.0072	.4658	.9244	.3831	.8417	.3003
332	.9024	.6318	.3611	.0904	.8198	.5491	.2784	.0077	.4664	.9251	.3837	.8424	.3010
432335	70.9029	72.6323	74.3616	76.0910	77.8203	79.5496	81.2790	83.0083	86.4670	89.9257	93.3844	96.8430	100.3017
338	.9034	.6328	.3621	.0915	.8208	.5502	.2795	.0089	.4676	.9263	.3850	.8437	.3024
341	.9039	.6333	.3627	.0920	.8214	.5507	.2801	.0095	.4682	.9269	.3857	.8444	.3031
344	.9044	.6338	.3632	.0925	.8219	.5513	.2807	.0100	.4688	.9276	.3863	.8451	.3038
347	.9049	.6343	.3637	.0931	.8225	.5518	.2812	.0106	.4694	.9282	.3870	.8457	.3045
432350	70.9054	72.6348	74.3642	76.0936	77.8230	79.5524	81.2818	83.0112	86.4700	89.9288	93.3876	96.8464	100.3052
353	.9059	.6353	.3647	.0941	.8235	.5530	.2824	.0118	.4706	.9294	.3882	.8471	.3059
356	.9064	.6358	.3652	.0947	.8241	.5535	.2829	.0124	.4712	.9300	.3889	.8477	.3066
359	.9069	.6363	.3657	.0952	.8246	.5541	.2835	.0129	.4718	.9307	.3895	.8484	.3073
362	.9074	.6368	.3663	.0957	.8252	.5546	.2841	.0135	.4724	.9313	.3902	.8491	.3080
432365	70.9079	72.6373	74.3668	76.0962	77.8257	79.5552	81.2846	83.0141	86.4730	89.9319	93.3908	96.8498	100.3087
368	.9084	.6378	.3673	.0968	.8262	.5557	.2852	.0147	.4736	.9325	.3915	.8504	.3094
371	.9088	.6383	.3678	.0973	.8268	.5563	.2857	.0152	.4742	.9332	.3921	.8511	.3101
374	.9093	.6388	.3683	.0978	.8273	.5568	.2863	.0158	.4748	.9338	.3928	.8518	.3108
377	.9098	.6393	.3688	.0984	.8279	.5574	.2869	.0164	.4754	.9344	.3934	.8524	.3115
432380	70.9103	72.6398	74.3694	76.0989	77.8284	79.5579	81.2874	83.0170	86.4760	89.9350	93.3941	96.8531	100.3122
383	.9108	.6403	.3699	.0994	.8289	.5585	.2880	.0175	.4766	.9357	.3947	.8538	.3129
386	.9113	.6408	.3704	.0999	.8295	.5590	.2886	.0181	.4772	.9363	.3954	.8545	.3136
389	.9118	.6414	.3709	.1005	.8300	.5596	.2891	.0187	.4778	.9369	.3960	.8551	.3142
392	.9123	.6419	.3714	.1010	.8306	.5601	.2897	.0193	.4784	.9375	.3967	.8558	.3149
432395	70.9128	72.6424	74.3719	76.1015	77.8311	79.5607	81.2903	83.0198	86.4790	89.9382	93.3973	96.8565	100.3156
398	.9133	.6429	.3725	.1020	.8316	.5612	.2908	.0204	.4796	.9388	.3980	.8572	.3163
401	.9138	.6434	.3730	.1026	.8322	.5618	.2914	.0210	.4802	.9394	.3986	.8578	.3170
404	.9143	.6439	.3735	.1031	.8327	.5623	.2920	.0216	.4808	.9400	.3993	.8585	.3177
407	.9147	.6444	.3740	.1036	.8333	.5629	.2925	.0221	.4814	.9407	.3999	.8592	.3184
432410	70.9152	72.6449	74.3745	76.1042	77.8338	79.5634	81.2931	83.0227	86.4820	89.9413	93.4006	96.8598	100.3191
413	.9157	.6454	.3750	.1047	.8343	.5640	.2936	.0233	.4826	.9419	.4012	.8605	.3198
416	.9162	.6459	.3756	.1052	.8349	.5645	.2942	.0239	.4832	.9425	.4019	.8612	.3205
419	.9167	.6464	.3761	.1057	.8354	.5651	.2948	.0244	.4838	.9432	.4025	.8619	.3212
422	.9172	.6469	.3766	.1063	.8360	.5656	.2953	.0250	.4844	.9438	.4032	.8625	.3219
432425	70.9177	72.6474	74.3771	76.1068	77.8365	79.5662	81.2959	83.0256	86.4850	89.9444	93.4038	96.8632	100.3226
428	.9182	.6479	.3776	.1073	.8370	.5668	.2965	.0262	.4856	.9450	.4044	.8639	.3233
431	.9187	.6484	.3781	.1079	.8376	.5673	.2970	.0268	.4862	.9456	.4051	.8645	.3240
434	.9192	.6489	.3786	.1084	.8381	.5679	.2976	.0273	.4868	.9463	.4057	.8652	.3247
437	.9197	.6494	.3792	.1089	.8387	.5684	.2982	.0279	.4874	.9469	.4064	.8659	.3254
432440	70.9202	72.6499	74.3797	76.1094	77.8392	79.5690	81.2987	83.0285	86.4880	89.9475	93.4070	96.8666	100.3261
443	.9207	.6504	.3802	.1100	.8397	.5695	.2993	.0291	.4886	.9481	.4077	.8672	.3268
446	.9211	.6509	.3807	.1105	.8403	.5701	.2998	.0296	.4892	.9488	.4083	.8679	.3275
449	.9216	.6514	.3812	.1110	.8408	.5706	.3004	.0302	.4898	.9494	.4090	.8686	.3282
452	.9221	.6519	.3817	.1116	.8414	.5712	.3010	.0308	.4904	.9500	.4096	.8692	.3289
432455	70.9226	72.6524	74.3823	76.1121	77.8419	79.5717	81.3015	83.0314	86.4910	89.9506	93.4103	96.8699	100.3296
458	.9231	.6529	.3828	.1126	.8424	.5723	.3021	.0319	.4916	.9513	.4109	.8706	.3303
461	.9236	.6534	.3833	.1131	.8430	.5728	.3027	.0325	.4922	.9519	.4116	.8713	.3310
464	.9241	.6540	.3838	.1137	.8435	.5734	.3032	.0331	.4928	.9525	.4122	.8719	.3316
467	.9246	.6545	.3843	.1142	.8441	.5739	.3038	.0337	.4934	.9531	.4129	.8726	.3323
432470	70.9251	72.6550	74.3848	76.1147	77.8446	79.5745	81.3044	83.0342	86.4940	89.9538	93.4135	96.8733	100.3330
473	.9256	.6555	.3854	.1152	.8451	.5750	.3049	.0348	.4946	.9544	.4142	.8740	.3337
476	.9261	.6560	.3859	.1158	.8457	.5756	.3055	.0354	.4952	.9550	.4148	.8746	.3344
479	.9266	.6565	.3864	.1163	.8462	.5761	.3061	.0360	.4958	.9556	.4155	.8753	.3351
482	.9270	.6570	.3869	.1168	.8468	.5767	.3066	.0365	.4964	.9563	.4161	.8760	.3358
432485	70.9275	72.6575	74.3874	76.1174	77.8473	79.5772	81.3072	83.0371	86.4970	89.9569	93.4168	96.8766	100.3365
488	.9280	.6580	.3879	.1179	.8478	.5778	.3077	.0377	.4976	.9575	.4174	.8773	.3372
491	.9285	.6585	.3885	.1184	.8484	.5783	.3083	.0383	.4982	.9581	.4181	.8780	.3379
494	.9290	.6590	.3890	.1189	.8489	.5789	.3089	.0388	.4988	.9588	.4187	.8787	.3386
497	.9295	.6595	.3895	.1195	.8495	.5794	.3094	.0394	.4994	.9594	.4194	.8793	.3393
432500	70.9300	72.6600	74.3900	76.1200	77.8500	79.5800	81.3100	83.0400	86.5000	89.9600	93.4200	96.8800	100.3400

HARMONICS

BASIC FREQ.	112	116	120	124	128	132	136	140	144	148	152	156	160
432500	48.4400	50.1700	51.9000	53.6300	55.3600	57.0900	58.8200	60.5500	62.2800	64.0100	65.7400	67.4700	69.2000
503	.4403	.1703	.9004	.6304	.3604	.0904	.8204	.5504	.2804	.0104	.7405	.4705	.2005
506	.4407	.1707	.9007	.6307	.3608	.0908	.8208	.5508	.2809	.0109	.7409	.4709	.2010
509	.4410	.1710	.9011	.6311	.3612	.0912	.8212	.5513	.2813	.0113	.7414	.4714	.2014
512	.4413	.1714	.9014	.6315	.3615	.0916	.8216	.5517	.2817	.0118	.7418	.4719	.2019
432515	48.4417	50.1717	51.9018	53.6319	55.3619	57.0920	58.8220	60.5521	62.2822	64.0122	65.7423	67.4723	69.2024
518	.4420	.1721	.9022	.6322	.3623	.0924	.8224	.5525	.2826	.0127	.7427	.4728	.2029
521	.4424	.1724	.9025	.6326	.3627	.0928	.8229	.5529	.2830	.0131	.7432	.4733	.2034
524	.4427	.1728	.9029	.6330	.3631	.0932	.8233	.5534	.2835	.0136	.7436	.4737	.2038
527	.4430	.1731	.9032	.6333	.3635	.0936	.8237	.5538	.2839	.0140	.7441	.4742	.2043
432530	48.4434	50.1735	51.9036	53.6337	55.3638	57.0940	58.8241	60.5542	62.2843	64.0144	65.7446	67.4747	69.2048
533	.4437	.1738	.9040	.6341	.3642	.0944	.8245	.5546	.2848	.0149	.7450	.4751	.2053
536	.4440	.1742	.9043	.6345	.3646	.0948	.8249	.5550	.2852	.0153	.7455	.4756	.2058
539	.4444	.1745	.9047	.6348	.3650	.0951	.8253	.5555	.2856	.0158	.7459	.4761	.2062
542	.4447	.1749	.9050	.6352	.3654	.0955	.8257	.5559	.2860	.0162	.7464	.4766	.2067
432545	48.4450	50.1752	51.9054	53.6356	55.3658	57.0959	58.8261	60.5563	62.2865	64.0167	65.7468	67.4770	69.2072
548	.4454	.1756	.9058	.6360	.3661	.0963	.8265	.5567	.2869	.0171	.7473	.4775	.2077
551	.4457	.1759	.9061	.6363	.3665	.0967	.8269	.5571	.2873	.0175	.7478	.4780	.2082
554	.4460	.1763	.9065	.6367	.3669	.0971	.8273	.5576	.2878	.0180	.7482	.4784	.2086
557	.4464	.1766	.9068	.6371	.3673	.0975	.8278	.5580	.2882	.0184	.7487	.4789	.2091
432560	48.4467	50.1770	51.9072	53.6374	55.3677	57.0979	58.8282	60.5584	62.2886	64.0189	65.7491	67.4794	69.2096
563	.4471	.1773	.9076	.6378	.3681	.0983	.8286	.5588	.2891	.0193	.7496	.4798	.2101
566	.4474	.1777	.9079	.6382	.3684	.0987	.8290	.5592	.2895	.0198	.7500	.4803	.2106
569	.4477	.1780	.9083	.6386	.3688	.0991	.8294	.5597	.2899	.0202	.7505	.4808	.2110
572	.4481	.1784	.9086	.6389	.3692	.0995	.8298	.5601	.2904	.0207	.7509	.4812	.2115
432575	48.4484	50.1787	51.9090	53.6393	55.3696	57.0999	58.8302	60.5605	62.2908	64.0211	65.7514	67.4817	69.2120
578	.4487	.1790	.9094	.6397	.3700	.1003	.8306	.5609	.2912	.0215	.7519	.4822	.2125
581	.4491	.1794	.9097	.6400	.3704	.1007	.8310	.5613	.2917	.0220	.7523	.4826	.2130
584	.4494	.1797	.9101	.6404	.3708	.1011	.8314	.5618	.2921	.0224	.7528	.4831	.2134
587	.4497	.1801	.9104	.6408	.3711	.1015	.8318	.5622	.2925	.0229	.7532	.4836	.2139
432590	48.4501	50.1804	51.9108	53.6412	55.3715	57.1019	58.8322	60.5626	62.2930	64.0233	65.7537	67.4840	69.2144
593	.4504	.1808	.9112	.6415	.3719	.1023	.8326	.5630	.2934	.0238	.7541	.4845	.2149
596	.4508	.1811	.9115	.6419	.3723	.1027	.8331	.5634	.2938	.0242	.7546	.4850	.2154
599	.4511	.1815	.9119	.6423	.3727	.1031	.8335	.5639	.2943	.0247	.7550	.4854	.2158
602	.4514	.1818	.9122	.6426	.3731	.1035	.8339	.5643	.2947	.0251	.7555	.4859	.2163
432605	48.4518	50.1822	51.9126	53.6430	55.3734	57.1039	58.8343	60.5647	62.2951	64.0255	65.7560	67.4864	69.2168
608	.4521	.1825	.9130	.6434	.3738	.1043	.8347	.5651	.2956	.0260	.7564	.4868	.2173
611	.4524	.1829	.9133	.6438	.3742	.1047	.8351	.5655	.2960	.0264	.7569	.4873	.2178
614	.4528	.1832	.9137	.6441	.3746	.1050	.8355	.5660	.2964	.0269	.7573	.4878	.2182
617	.4531	.1836	.9140	.6445	.3750	.1054	.8359	.5664	.2968	.0273	.7578	.4883	.2187
432620	48.4534	50.1839	51.9144	53.6449	55.3754	57.1058	58.8363	60.5668	62.2973	64.0278	65.7582	67.4887	69.2192
623	.4538	.1843	.9148	.6453	.3757	.1062	.8367	.5672	.2977	.0282	.7587	.4892	.2197
626	.4541	.1846	.9151	.6456	.3761	.1066	.8371	.5676	.2981	.0286	.7592	.4897	.2202
629	.4544	.1850	.9155	.6460	.3765	.1070	.8375	.5681	.2986	.0291	.7596	.4901	.2206
632	.4548	.1853	.9158	.6464	.3769	.1074	.8380	.5685	.2990	.0295	.7601	.4906	.2211
432635	48.4551	50.1857	51.9162	53.6467	55.3773	57.1078	58.8384	60.5689	62.2994	64.0300	65.7605	67.4911	69.2216
638	.4555	.1860	.9166	.6471	.3777	.1082	.8388	.5693	.2999	.0304	.7610	.4915	.2221
641	.4558	.1864	.9169	.6475	.3780	.1086	.8392	.5697	.3003	.0309	.7614	.4920	.2226
644	.4561	.1867	.9173	.6479	.3784	.1090	.8396	.5702	.3007	.0313	.7619	.4925	.2230
647	.4565	.1871	.9176	.6482	.3788	.1094	.8400	.5706	.3012	.0318	.7623	.4929	.2235
432650	48.4568	50.1874	51.9180	53.6486	55.3792	57.1098	58.8404	60.5710	62.3016	64.0322	65.7628	67.4934	69.2240
653	.4571	.1877	.9184	.6490	.3796	.1102	.8408	.5714	.3020	.0326	.7633	.4939	.2245
656	.4575	.1881	.9187	.6493	.3800	.1106	.8412	.5718	.3025	.0331	.7637	.4943	.2250
659	.4578	.1884	.9191	.6497	.3804	.1110	.8416	.5723	.3029	.0335	.7642	.4948	.2254
662	.4581	.1888	.9194	.6501	.3807	.1114	.8420	.5727	.3033	.0340	.7646	.4953	.2259
432665	48.4585	50.1891	51.9198	53.6505	55.3811	57.1118	58.8424	60.5731	62.3038	64.0344	65.7651	67.4957	69.2264
668	.4588	.1895	.9202	.6508	.3815	.1122	.8428	.5735	.3042	.0349	.7655	.4962	.2269
671	.4592	.1898	.9205	.6512	.3819	.1126	.8433	.5739	.3046	.0353	.7660	.4967	.2274
674	.4595	.1902	.9209	.6516	.3823	.1130	.8437	.5744	.3051	.0358	.7664	.4971	.2278
677	.4598	.1905	.9212	.6519	.3827	.1134	.8441	.5748	.3055	.0362	.7669	.4976	.2283
432680	48.4602	50.1909	51.9216	53.6523	55.3830	57.1138	58.8445	60.5752	62.3059	64.0366	65.7674	67.4981	69.2288
683	.4605	.1912	.9220	.6527	.3834	.1142	.8449	.5756	.3064	.0371	.7678	.4985	.2293
686	.4608	.1916	.9223	.6531	.3838	.1146	.8453	.5760	.3068	.0375	.7683	.4990	.2298
689	.4612	.1919	.9227	.6534	.3842	.1149	.8457	.5765	.3072	.0380	.7687	.4995	.2302
692	.4615	.1923	.9230	.6538	.3846	.1153	.8461	.5769	.3076	.0384	.7692	.5000	.2307
432695	48.4618	50.1926	51.9234	53.6542	55.3850	57.1157	58.8465	60.5773	62.3081	64.0389	65.7696	67.5004	69.2312
698	.4622	.1930	.9238	.6546	.3853	.1161	.8469	.5777	.3085	.0393	.7701	.5009	.2318
701	.4625	.1933	.9241	.6549	.3857	.1165	.8473	.5781	.3089	.0397	.7706	.5014	.2322
704	.4628	.1937	.9245	.6553	.3861	.1169	.8477	.5786	.3094	.0402	.7710	.5018	.2326
707	.4632	.1940	.9248	.6557	.3865	.1173	.8482	.5790	.3098	.0406	.7715	.5023	.2331
432710	48.4635	50.1944	51.9252	53.6560	55.3869	57.1177	58.8486	60.5794	62.3102	64.0411	65.7719	67.5028	69.2336
713	.4639	.1947	.9256	.6564	.3873	.1181	.8490	.5798	.3107	.0415	.7724	.5032	.2341
716	.4642	.1951	.9259	.6568	.3876	.1185	.8494	.5802	.3111	.0420	.7728	.5037	.2346
719	.4645	.1954	.9263	.6572	.3880	.1189	.8498	.5807	.3115	.0424	.7733	.5042	.2350
722	.4649	.1958	.9266	.6575	.3884	.1193	.8502	.5811	.3120	.0429	.7737	.5046	.2355
432725	48.4652	50.1961	51.9270	53.6579	55.3888	57.1197	58.8506	60.5815	62.3124	64.0433	65.7742	67.5051	69.2360
728	.4655	.1964	.9274	.6583	.3892	.1201	.8510	.5819	.3128	.0437	.7747	.5056	.2365
731	.4659	.1968	.9277	.6586	.3896	.1205	.8514	.5823	.3133	.0442	.7751	.5060	.2370
734	.4662	.1971	.9281	.6590	.3900	.1209	.8518	.5828	.3137	.0446	.7756	.5065	.2374
737	.4665	.1975	.9284	.6594	.3903	.1213	.8522	.5832	.3141	.0451	.7760	.5070	.2379
432740	48.4669	50.1978	51.9288	53.6598	55.3907	57.1217	58.8526	60.5836	62.3146	64.0455	65.7765	67.5074	69.2384
743	.4672	.1982	.9292	.6601	.3911	.1221	.8530	.5840	.3150	.0460	.7769	.5079	.2389
746	.4676	.1985	.9295	.6605	.3915	.1225	.8535	.5844	.3154	.0464	.7774	.5084	.2394
749	.4679	.1989	.9299	.6609	.3919	.1229	.8539	.5849	.3159	.0469	.7778	.5088	.2398
752	.4682	.1992	.9302	.6612	.3923	.1233	.8543	.5853	.3163	.0473	.7783	.5093	.2403
432755	48.4686	50.1996	51.9306	53.6616	55.3926	57.1237	58.8547	60.5857	62.3167	64.0477	65.7788	67.5098	69.2408
758	.4689	.1999	.9310	.6620	.3930	.1241	.8551	.5861	.3172	.0482	.7792	.5102	.2413
761	.4692	.2003	.9313	.6624	.3934	.1245	.8555	.5865	.3176	.0486	.7797	.5107	.2418
764	.4696	.2006	.9317	.6627	.3938	.1248	.8559	.5870	.3180	.0491	.7801	.5112	.2422
767	.4699	.2010	.9320	.6631	.3942	.1252	.8563	.5874	.3184	.0495	.7806	.5117	.2427
432770	48.4702	50.2013	51.9324	53.6635	55.3946	57.1256	58.8567	60.5878	62.3189	64.0500	65.7810	67.5121	69.2432
773	.4706	.2017	.9328	.6639	.3949	.1260	.8571	.5882	.3193	.0504	.7815	.5126	.2437
776	.4709	.2020	.9331	.6642	.3953	.1264	.8575	.5886	.3197	.0508	.7820	.5131	.2442
779	.4712	.2024	.9335	.6646	.3957	.1268	.8579	.5891	.3202	.0513	.7824	.5135	.2446
782	.4716	.2027	.9338	.6650	.3961	.1272	.8584	.5895	.3206	.0517	.7829	.5140	.2451
432785	48.4719	50.2031	51.9342	53.6653	55.3965	57.1276	58.8588	60.5899	62.3210	64.0522	65.7833	67.5145	69.2456
788	.4723	.2034	.9346	.6657	.3969	.1280	.8592	.5903	.3215	.0526	.7838	.5149	.2461
791	.4726	.2038	.9349	.6661	.3972	.1284	.8596	.5907	.3219	.0531	.7842	.5154	.2466
794	.4729	.2041	.9353	.6665	.3976	.1288	.8600	.5912	.3223	.0535	.7847	.5159	.2470
797	.4733	.2045	.9356	.6668	.3980	.1292	.8604	.5916	.3228	.0540	.7851	.5163	.2475
432800	48.4736	50.2048	51.9360	53.6672	55.3984	57.1296	58.8608	60.5920	62.3232	64.0544	65.7856	67.5168	69.2480

MEGACYCLES PER SECOND

HARMONICS

BASIC FREQ.	164	168	172	176	180	184	188	192	200	208	216	224	232
432500	70.9300	72.6600	74.3900	76.1200	77.8500	79.5800	81.3100	83.0400	86.5000	89.9600	93.4200	96.8800	100.3400
503	.9305	.6605	.3905	.1205	.8505	.5806	.3106	.0406	.5006	.9606	.4206	.8807	.3407
506	.9310	.6610	.3910	.1211	.8511	.5811	.3111	.0412	.5012	.9612	.4213	.8813	.3414
509	.9315	.6615	.3915	.1216	.8516	.5817	.3117	.0417	.5018	.9619	.4219	.8820	.3421
512	.9320	.6620	.3921	.1221	.8522	.5822	.3123	.0423	.5024	.9625	.4226	.8827	.3428
432515	70.9325	72.6625	74.3926	76.1226	77.8527	79.5828	81.3128	83.0429	86.5030	89.9631	93.4232	96.8834	100.3435
518	.9330	.6630	.3931	.1232	.8532	.5833	.3134	.0435	.5036	.9637	.4239	.8840	.3442
521	.9334	.6635	.3936	.1237	.8538	.5839	.3139	.0440	.5042	.9644	.4245	.8847	.3449
524	.9339	.6640	.3941	.1242	.8543	.5844	.3145	.0446	.5048	.9650	.4252	.8854	.3456
527	.9344	.6645	.3946	.1248	.8549	.5850	.3151	.0452	.5054	.9656	.4258	.8860	.3463
432530	70.9349	72.6650	74.3952	76.1253	77.8554	79.5855	81.3156	83.0458	86.5060	89.9662	93.4265	96.8867	100.3470
533	.9354	.6655	.3957	.1258	.8559	.5861	.3162	.0463	.5066	.9669	.4271	.8874	.3477
536	.9359	.6660	.3962	.1263	.8565	.5866	.3168	.0469	.5072	.9675	.4278	.8881	.3484
539	.9364	.6666	.3967	.1269	.8570	.5872	.3173	.0475	.5078	.9681	.4284	.8887	.3490
542	.9369	.6671	.3972	.1274	.8576	.5877	.3179	.0481	.5084	.9687	.4291	.8894	.3497
432545	70.9374	72.6676	74.3977	76.1279	77.8581	79.5883	81.3185	83.0486	86.5090	89.9694	93.4297	96.8901	100.3504
548	.9379	.6681	.3983	.1284	.8586	.5888	.3190	.0492	.5096	.9700	.4304	.8908	.3511
551	.9384	.6686	.3988	.1290	.8592	.5894	.3196	.0498	.5102	.9706	.4310	.8914	.3518
554	.9389	.6691	.3993	.1295	.8597	.5899	.3202	.0504	.5108	.9712	.4317	.8921	.3525
557	.9393	.6696	.3998	.1300	.8603	.5905	.3207	.0509	.5114	.9719	.4323	.8928	.3532
432560	70.9398	72.6701	74.4003	76.1306	77.8608	79.5910	81.3213	83.0515	86.5120	89.9725	93.4330	96.8934	100.3539
563	.9403	.6706	.4008	.1311	.8613	.5916	.3218	.0521	.5126	.9731	.4336	.8941	.3546
566	.9408	.6711	.4014	.1316	.8619	.5921	.3224	.0527	.5132	.9737	.4343	.8948	.3553
569	.9413	.6716	.4019	.1321	.8624	.5927	.3230	.0532	.5138	.9744	.4349	.8955	.3560
572	.9418	.6721	.4024	.1327	.8630	.5932	.3235	.0538	.5144	.9750	.4356	.8961	.3567
432575	70.9423	77.6726	74.4029	76.1332	77.8635	79.5938	81.3241	83.0544	86.5150	89.9756	93.4362	96.8968	100.3574
578	.9428	.6731	.4034	.1337	.8640	.5944	.4247	.0550	.5156	.9762	.4368	.8975	.3581
581	.9433	.6736	.4039	.1343	.8646	.5949	.3252	.0556	.5162	.9768	.4375	.8981	.3588
584	.9438	.6741	.4044	.1348	.8651	.5955	.3258	.0561	.5168	.9775	.4381	.8988	.3595
587	.9443	.6746	.4050	.1353	.8657	.5960	.3264	.0567	.5174	.9781	.4388	.8995	.3602
432590	70.9448	72.6751	74.4055	76.1358	77.8662	79.5966	81.3269	83.0573	86.5180	89.9787	93.4394	96.9002	100.3609
593	.9453	.6756	.4060	.1364	.8667	.5971	.3275	.0579	.5186	.9793	.4401	.9008	.3616
596	.9457	.6761	.4065	.1369	.8673	.5977	.3280	.0584	.5192	.9800	.4407	.9015	.3623
599	.9462	.6766	.4070	.1374	.8678	.5982	.3286	.0590	.5198	.9806	.4414	.9022	.3630
602	.9467	.6771	.4075	.1380	.8684	.5988	.3292	.0596	.5204	.9812	.4420	.9028	.3637
432605	70.9472	72.6776	74.4081	76.1385	77.8689	79.5993	81.3297	83.0602	86.5210	89.9818	93.4427	96.9035	100.3644
608	.9477	.6781	.4086	.1390	.8694	.5999	.3303	.0607	.5216	.9825	.4433	.9042	.3651
611	.9482	.6786	.4091	.1395	.8700	.6004	.3309	.0613	.5222	.9831	.4440	.9049	.3658
614	.9487	.6792	.4096	.1401	.8705	.6010	.3314	.0619	.5228	.9837	.4446	.9055	.3664
617	.9492	.6797	.4101	.1406	.8711	.6015	.3320	.0625	.5234	.9843	.4453	.9062	.3671
432620	70.9497	72.6802	74.4106	76.1411	77.8716	79.6021	81.3326	83.0630	86.5240	89.9850	93.4459	96.9069	100.3678
623	.9502	.6807	.4112	.1416	.8721	.6026	.3331	.0636	.5246	.9856	.4466	.9076	.3685
626	.9507	.6812	.4117	.1422	.8727	.6032	.3337	.0642	.5252	.9862	.4472	.9082	.3692
629	.9512	.6817	.4122	.1427	.8732	.6037	.3343	.0648	.5258	.9868	.4479	.9089	.3699
632	.9516	.6822	.4127	.1432	.8738	.6043	.3348	.0653	.5264	.9875	.4485	.9096	.3706
432635	70.9521	72.6827	74.4132	76.1438	77.8743	79.6048	81.3354	83.0659	86.5270	89.9881	93.4492	96.9102	100.3713
638	.9526	.6832	.4137	.1443	.8748	.6054	.3359	.0665	.5276	.9887	.4498	.9109	.3720
641	.9531	.6837	.4143	.1448	.8754	.6059	.3365	.0671	.5282	.9893	.4505	.9116	.3727
644	.9536	.6842	.4148	.1453	.8759	.6065	.3371	.0676	.5288	.9900	.4511	.9123	.3734
647	.9541	.6847	.4153	.1459	.8765	.6070	.3376	.0682	.5294	.9906	.4518	.9129	.3741
432650	70.9546	72.6852	74.4158	76.1464	77.8770	79.6076	81.3382	83.0688	86.5300	89.9912	93.4524	96.9136	100.3748
653	.9551	.6857	.4163	.1469	.8775	.6082	.3388	.0694	.5306	.9918	.4530	.9143	.3755
656	.9556	.6862	.4168	.1475	.8781	.6087	.3393	.0700	.5312	.9924	.4537	.9149	.3762
659	.9561	.6867	.4173	.1480	.8786	.6093	.3399	.0705	.5318	.9931	.4543	.9156	.3769
662	.9566	.6872	.4179	.1485	.8792	.6098	.3405	.0711	.5324	.9937	.4550	.9163	.3776
432665	70.9571	72.6877	74.4184	76.1490	77.8797	79.6104	81.3410	83.0717	86.5330	89.9943	93.4556	96.9170	100.3783
668	.9576	.6882	.4189	.1496	.8802	.6109	.3416	.0723	.5336	.9949	.4563	.9176	.3790
671	.9580	.6887	.4194	.1501	.8808	.6115	.3421	.0728	.5342	.9956	.4569	.9183	.3797
674	.9585	.6892	.4199	.1506	.8813	.6120	.3427	.0734	.5348	.9962	.4576	.9190	.3804
677	.9590	.6897	.4204	.1512	.8819	.6126	.3433	.0740	.5354	.9968	.4582	.9196	.3811
432680	70.9595	72.6902	74.4210	76.1517	77.8824	79.6131	81.3438	83.0746	86.5360	89.9974	93.4589	96.9203	100.3818
683	.9600	.6907	.4215	.1522	.8829	.6137	.3444	.0751	.5366	.9981	.4595	.9210	.3825
686	.9605	.6912	.4220	.1527	.8835	.6142	.3450	.0757	.5372	.9987	.4602	.9217	.3832
689	.9610	.6918	.4225	.1533	.8840	.6148	.3455	.0763	.5378	.9993	.4608	.9223	.3838
692	.9615	.6923	.4230	.1538	.8846	.6153	.3461	.0769	.5384	.9999	.4615	.9230	.3845
432695	70.9620	72.6928	74.4235	76.1543	77.8851	79.6159	81.3467	83.0774	86.5390	90.0006	93.4621	96.9237	100.3852
698	.9625	.6933	.4241	.1548	.8856	.6164	.3472	.0780	.5396	.0012	.4628	.9244	.3859
701	.9630	.6938	.4246	.1554	.8862	.6170	.3478	.0786	.5402	.0018	.4634	.9250	.3866
704	.9635	.6943	.4251	.1559	.8867	.6175	.3484	.0792	.5408	.0024	.4641	.9257	.3873
707	.9639	.6948	.4256	.1564	.8873	.6181	.3489	.0797	.5414	.0031	.4647	.9264	.3880
432710	70.9644	72.6953	74.4261	76.1570	77.8878	79.6186	81.3495	83.0803	86.5420	90.0037	93.4654	96.9270	100.3887
713	.9649	.6958	.4266	.1575	.8883	.6192	.3500	.0809	.5426	.0043	.4660	.9277	.3894
716	.9654	.6963	.4272	.1580	.8889	.6197	.3506	.0815	.5432	.0049	.4667	.9284	.3901
719	.0659	.6968	.4277	.1585	.8894	.6203	.3512	.0820	.5438	.0056	.4673	.9291	.3908
722	.9664	.6973	.4282	.1591	.8900	.6208	.3517	.0826	.5444	.0062	.4680	.9297	.3915
432725	70.9669	72.6978	74.4287	76.1596	77.8905	79.6214	81.3523	83.0832	86.5450	90.0068	93.4686	96.9304	100.3922
728	.9674	.6983	.4292	.1601	.8910	.6220	.3529	.0838	.5456	.0074	.4692	.9311	.3929
731	.9679	.6988	.4297	.1607	.8916	.6225	.3534	.0844	.5462	.0080	.4699	.9317	.3936
734	.9684	.6993	.4302	.1612	.8921	.6231	.3540	.0849	.5468	.0087	.4705	.9324	.3943
737	.9789	.6998	.4308	.1617	.8927	.6236	.3546	.0855	.5474	.0093	.4712	.9331	.3950
432740	70.9694	72.7003	74.4313	76.1622	77.8932	79.6242	81.3551	83.0861	86.5480	90.0099	93.4718	96.9338	100.3957
743	.9699	.7008	.4318	.1628	.8937	.6247	.3557	.0867	.5486	.0105	.4725	.9344	.3964
746	.9703	.7013	.4323	.1633	.8943	.6253	.3562	.0872	.5492	.0112	.4731	.9351	.3971
749	.9708	.7018	.4328	.1638	.8948	.6258	.3568	.0878	.5498	.0118	.4738	.9358	.3978
752	.9713	.7023	.4333	.1644	.8954	.6264	.3574	.0884	.5504	.0124	.4744	.9364	.3985
432755	70.9718	72.7028	74.4339	76.1649	77.8959	79.6269	81.3579	83.0890	86.5510	90.0130	93.4751	96.9371	100.3992
758	.9723	.7033	.4344	.1654	.8964	.6275	.3585	.0895	.5516	.0137	.4757	.9378	.3999
761	.9728	.7038	.4349	.1659	.8970	.6280	.3591	.0901	.5522	.0143	.4764	.9385	.4006
764	.9733	.7044	.4354	.1665	.8975	.6286	.3596	.0907	.5528	.0149	.4770	.9391	.4012
767	.9738	.7049	.4359	.1670	.8981	.6291	.3602	.0913	.5534	.0155	.4777	.9398	.4019
432770	70.9743	72.7054	74.4364	76.1675	77.8986	79.6297	81.3608	83.0918	86.5540	90.0162	93.4783	96.9405	100.4026
773	.9748	.7059	.4370	.1680	.8991	.6302	.3613	.0924	.5546	.0168	.4790	.9412	.4033
776	.9753	.7064	.4375	.1686	.8997	.6308	.3619	.0930	.5552	.0174	.4796	.9418	.4040
779	.9758	.7069	.4380	.1691	.9002	.6313	.3625	.0936	.5558	.0180	.4803	.9425	.4047
782	.9762	.7074	.4385	.1696	.9008	.6319	.3630	.0941	.5564	.0187	.4809	.9432	.4054
432785	70.9767	72.7079	74.4390	76.1702	77.9013	79.6324	81.3636	83.0947	86.5570	90.0193	93.4816	96.9438	100.4061
788	.9772	.7084	.4395	.1707	.9018	.6330	.3641	.0953	.5576	.0199	.4822	.8445	.4068
791	.9777	.7089	.4401	.1712	.9024	.6335	.3647	.0959	.5582	.0205	.4829	.9452	.4075
794	.9782	.7094	.4406	.1717	.9029	.6341	.3653	.0964	.5588	.0212	.4835	.9459	.4082
797	.9787	.7099	.4411	.1723	.9035	.6346	.3658	.0970	.5594	.0218	.4842	.9465	.4089
432800	70.9792	72.7104	74.4416	76.1728	77.9040	79.6352	81.3664	83.0976	86.5600	90.0224	93.4848	96.9472	100.4096

MEGACYCLES PER SECOND

R

H A R M O N I C S

BASIC FREQ.	112	116	120	124	128	132	136	140	144	148	152	156	160
432800	48.4736	50.2048	51.9360	53.6672	55.3984	57.1296	58.8608	60.5920	62.3232	64.0544	65.7856	67.5168	69.2480
803	.4739	.2051	.9364	.6676	.3988	.1300	.8612	.5924	.3236	.0548	.7861	.5173	.2485
806	.4743	.2055	.9367	.6679	.3992	.1304	.8616	.5928	.3241	.0553	.7865	.5177	.2490
809	.4746	.2058	.9371	.6683	.3996	.1308	.8620	.5933	.3245	.0557	.7870	.5182	.2494
812	.4749	.2062	.9374	.6687	.3999	.1312	.8624	.5937	.3249	.0562	.7874	.5187	.2499
432815	48.4753	50.2065	51.9378	53.6691	55.4003	57.1316	58.8628	60.5941	62.3254	64.0566	65.7879	67.5191	69.2504
818	.4756	.2069	.9382	.6694	.4007	.1320	.8632	.5945	.3258	.0571	.7883	.5196	.2509
821	.4760	.2072	.9385	.6698	.4011	.1324	.8637	.5949	.3262	.0575	.7888	.5201	.2514
824	.4763	.2076	.9389	.6702	.4015	.1328	.8641	.5954	.3267	.0580	.7892	.5205	.2518
827	.4766	.2079	.9392	.6705	.4019	.1332	.8645	.5958	.3271	.0584	.7897	.5210	.2523
432830	48.4770	50.2083	51.9396	53.6709	55.4022	57.1336	58.8649	60.5962	62.3275	64.0588	65.7902	67.5215	69.2528
833	.4773	.2086	.9400	.6713	.4026	.1340	.8653	.5966	.3280	.0593	.7906	.5219	.2533
836	.4776	.2090	.9403	.6717	.4030	.1344	.8657	.5970	.3284	.0597	.7911	.5224	.2538
839	.4780	.2093	.9407	.6720	.4034	.1347	.8661	.5975	.3288	.0602	.7915	.5229	.2542
842	.4783	.2097	.9410	.6724	.4038	.1351	.8665	.5979	.3292	.0606	.7920	.5234	.2547
432845	48.4786	50.2100	51.9414	53.6728	55.4042	57.1355	58.8669	60.5983	62.3297	64.0611	65.7924	67.5238	69.2552
848	.4790	.2104	.9418	.6732	.4045	.1359	.8673	.5987	.3301	.0615	.7929	.5243	.2557
851	.4793	.2107	.9421	.6735	.4049	.1363	.8677	.5991	.3305	.0619	.7934	.5248	.2562
854	.4796	.2111	.9425	.6739	.4053	.1367	.8681	.5996	.3310	.0624	.7938	.5252	.2566
857	.4800	.2114	.9428	.6743	.4057	.1371	.8686	.6000	.3314	.0628	.7943	.5257	.2571
432860	48.4803	50.2118	51.9432	53.6746	55.4061	57.1375	58.8690	60.6004	62.3318	64.0633	65.7947	67.5262	69.2576
863	.4807	.2121	.9436	.6750	.4065	.1379	.8694	.6008	.3323	.0637	.7952	.5266	.2581
866	.4810	.2125	.9439	.6754	.4068	.1383	.8698	.6012	.3327	.0642	.7956	.5271	.2586
869	.4813	.2128	.9443	.6758	.4072	.1387	.8702	.6017	.3331	.0646	.7961	.5276	.2590
872	.4817	.2132	.9446	.6761	.4076	.1391	.8706	.6021	.3336	.0651	.7965	.5280	.2595
432875	48.4820	50.2135	51.9450	53.6765	55.4080	57.1395	58.8710	60.6025	62.3340	64.0655	65.7970	67.5285	69.2600
878	.4823	.2138	.9454	.6769	.4084	.1399	.8714	.6029	.3344	.0659	.7975	.5290	.2605
881	.4827	.2142	.9457	.6772	.4088	.1403	.8718	.6033	.3349	.0664	.7979	.5294	.2610
884	.4830	.2145	.9461	.6776	.4092	.1407	.8722	.6038	.3353	.0668	.7984	.5299	.2614
887	.4833	.2149	.9464	.6780	.4095	.1411	.8726	.6042	.3357	.0673	.7988	.5304	.2619
432890	48.4837	50.2152	51.9468	53.6784	55.4099	57.1415	58.8730	60.6046	62.3362	64.0677	65.7993	67.5308	69.2624
893	.4840	.2156	.9472	.6787	.4103	.1419	.8734	.6050	.3366	.0682	.7997	.5313	.2629
896	.4844	.2159	.9475	.6791	.4107	.1423	.8739	.6054	.3370	.0686	.8002	.5318	.2634
899	.4847	.2163	.9479	.6795	.4111	.1427	.8743	.6059	.3375	.0691	.8006	.5322	.2638
902	.4850	.2166	.9482	.6798	.4115	.1431	.8747	.6063	.3379	.0695	.8011	.5327	.2643
432905	48.4854	50.2170	51.9486	53.6802	55.4118	57.1435	58.8751	60.6067	62.3383	64.0699	65.8016	67.5332	69.2648
908	.4857	.2173	.9490	.6806	.4122	.1439	.8755	.6071	.3388	.0704	.8020	.5336	.2653
911	.4860	.2177	.9493	.6810	.4126	.1443	.8759	.6075	.3392	.0708	.8025	.5341	.2658
914	.4864	.2180	.9497	.6813	.4130	.1446	.8763	.6080	.3396	.0713	.8029	.5346	.2662
917	.4867	.2184	.9500	.6817	.4134	.1450	.8767	.6084	.3400	.0717	.8034	.5351	.2667
432920	48.4870	50.2187	51.9504	53.6821	55.4138	57.1454	58.8771	60.6088	62.3405	64.0722	65.8038	67.5355	69.2672
923	.4874	.2191	.9508	.6825	.4141	.1458	.8775	.6092	.3409	.0726	.8043	.5360	.2677
926	.4877	.2194	.9511	.6828	.4145	.1462	.8779	.6096	.3413	.0730	.8048	.5365	.2682
929	.4880	.2198	.9515	.6832	.4149	.1466	.8783	.6101	.3418	.0735	.8052	.5369	.2686
932	.4884	.2201	.9518	.6836	.4153	.1470	.8788	.6105	.3422	.0739	.8057	.5374	.2691
432935	48.4887	50.2205	51.9522	53.6839	55.4157	57.1474	58.8792	60.6109	62.3426	64.0744	65.8061	67.5379	69.2696
938	.4891	.2208	.9526	.6843	.4161	.1478	.8796	.6113	.3431	.0748	.8066	.5383	.2701
941	.4894	.2212	.9529	.6847	.4164	.1482	.8800	.6117	.3435	.0755	.8070	.5388	.2706
944	.4897	.2215	.9533	.6851	.4168	.1486	.8804	.6122	.3439	.0757	.8075	.5393	.2710
947	.4901	.2219	.9536	.6854	.4172	.1490	.8808	.6126	.3444	.0762	.8079	.5397	.2715
432950	48.4904	50.2222	51.9540	53.6858	55.4176	57.1494	58.8812	60.6130	62.3448	64.0766	65.8084	67.5402	69.2720
953	.4907	.2225	.9544	.6862	.4180	.1498	.8816	.6134	.3452	.0770	.8089	.5407	.2725
956	.4911	.2229	.9547	.6865	.4184	.1502	.8820	.6138	.3457	.0775	.8093	.5411	.2730
959	.4914	.2232	.9551	.6869	.4188	.1506	.8824	.6143	.3461	.0779	.8098	.5416	.2734
962	.4917	.2236	.9554	.6873	.4191	.1510	.8828	.6147	.3465	.0784	.8102	.5421	.2739
432965	48.4921	50.2239	51.9558	53.6877	55.4195	57.1514	58.8832	60.6151	62.3470	64.0788	65.8107	67.5425	69.2744
968	.4924	.2243	.9562	.6880	.4199	.1518	.8836	.6155	.3474	.0793	.8111	.5430	.2749
971	.4928	.2246	.9565	.6884	.4203	.1522	.8841	.6159	.3478	.0797	.8116	.5435	.2754
974	.4931	.2250	.9569	.6888	.4207	.1526	.8845	.6164	.3483	.0802	.8120	.5439	.2758
977	.4934	.2253	.9572	.6891	.4211	.1530	.8849	.6168	.3487	.0806	.8125	.5444	.2763
432980	48.4938	50.2257	51.9576	53.6895	55.4214	57.1534	58.8853	60.6172	62.3491	64.0810	65.8130	67.5449	69.2768
983	.4941	.2260	.9580	.6899	.4218	.1538	.8857	.6176	.3496	.0815	.8134	.5453	.2773
986	.4944	.2264	.9583	.6903	.4222	.1542	.8861	.6180	.3500	.0819	.8139	.5458	.2778
989	.4948	.2267	.9587	.6906	.4226	.1545	.8865	.6185	.3504	.0824	.8143	.5463	.2782
992	.4951	.2271	.9590	.6910	.4230	.1549	.8869	.6189	.3508	.0828	.8148	.5468	.2787
432995	48.4954	50.2274	51.9594	53.6914	55.4234	57.1553	58.8873	60.6193	62.3513	64.0833	65.8152	67.5472	69.2792
998	.4958	.2278	.9598	.6918	.4237	.1557	.8877	.6197	.3517	.0837	.8157	.5477	.2797
433001	.4961	.2281	.9601	.6921	.4241	.1561	.8881	.6201	.3521	.0841	.8162	.5482	.2802
004	.4964	.2285	.9605	.6925	.4245	.1565	.8885	.6206	.3526	.0846	.8166	.5486	.2806
007	.4968	.2288	.9608	.6929	.4249	.1569	.8890	.6210	.3530	.0850	.8171	.5491	.2811
433010	48.4971	50.2292	51.9612	53.6932	55.4253	57.1573	58.8894	60.6214	62.3534	64.0855	65.8175	67.5496	69.2816
013	.4975	.2295	.9616	.6936	.4257	.1577	.8898	.6218	.3539	.0859	.8180	.5500	.2821
016	.4978	.2299	.9619	.6940	.4260	.1581	.8902	.6222	.3543	.0864	.8184	.5505	.2826
019	.4981	.2302	.9623	.6944	.4264	.1585	.8906	.6227	.3547	.0868	.8189	.5510	.2830
022	.4985	.2306	.9626	.6947	.4268	.1589	.8910	.6231	.3552	.0873	.8193	.5514	.2835
433025	48.4988	50.2309	51.9630	53.6951	55.4272	57.1593	58.8914	60.6235	62.3556	64.0877	65.8198	67.5519	69.2840
028	.4991	.2312	.9634	.6955	.4276	.1597	.8918	.6239	.3560	.0881	.8203	.5524	.2845
031	.4995	.2316	.9637	.6958	.4280	.1601	.8922	.6243	.3565	.0886	.8207	.5528	.2850
034	.4998	.2319	.9641	.6962	.4284	.1605	.8926	.6248	.3569	.0890	.8212	.5533	.2854
037	.5001	.2323	.9644	.6966	.4287	.1609	.8930	.6252	.3573	.0895	.8216	.5538	.2859
433040	48.5005	50.2326	51.9648	53.6970	55.4291	57.1613	58.8934	60.6256	62.3578	64.0899	65.8221	67.5542	69.2864
043	.5008	.2330	.9652	.6973	.4295	.1617	.8938	.6260	.3582	.0904	.8225	.5547	.2869
046	.5012	.2333	.9655	.6977	.4299	.1621	.8943	.6264	.3586	.0908	.8230	.5552	.5874
049	.5015	.2337	.9659	.6981	.4303	.1625	.8947	.6269	.3591	.0913	.8234	.5556	.2878
052	.5018	.2340	.9662	.6984	.4307	.1629	.8951	.6273	.3595	.0917	.8239	.5561	.2883
433055	48.5022	50.2344	51.9666	53.6988	55.4310	57.1633	58.8955	60.6277	62.3599	64.0921	65.8244	67.5566	69.2888
058	.5025	.2347	.9670	.6992	.4314	.1637	.8959	.6281	.3604	.0926	.8248	.5570	.2893
061	.5028	.2351	.9673	.6996	.4318	.1641	.8963	.6285	.3608	.0930	.8253	.5575	.2898
064	.5032	.2354	.9677	.6999	.4322	.1644	.8967	.6290	.3612	.0935	.8257	.5580	.2902
067	.5035	.2358	.9680	.7003	.4326	.1648	.8971	.6294	.3616	.0939	.8262	.5585	.2907
433070	48.5038	50.2361	51.9684	53.7007	55.4330	57.1652	58.8975	60.6298	62.3621	64.0944	65.8266	67.5589	69.2912
073	.5042	.2365	.9688	.7011	.4333	.1656	.8979	.6302	.3625	.0948	.8271	.5594	.2917
076	.5045	.2368	.9691	.7014	.4337	.1660	.8983	.6306	.3629	.0952	.8276	.5599	.2922
079	.5048	.2372	.9695	.7018	.4341	.1664	.8987	.6311	.3634	.0957	.8280	.5603	.2926
082	.5052	.2375	.9698	.7022	.4345	.1668	.8992	.6315	.3638	.0961	.8285	.5608	.2931
433085	48.5055	50.2379	51.9702	53.7025	55.4349	57.1672	58.8996	60.6319	62.3642	64.0966	65.8289	67.5613	69.2936
088	.5059	.2382	.9706	.7029	.4353	.1676	.9000	.6323	.3647	.0970	.8294	.5617	.2941
091	.5062	.2386	.9709	.7033	.4356	.1680	.9004	.6327	.3651	.0975	.8298	.5622	.2946
094	.5065	.2389	.9713	.7037	.4360	.1684	.9008	.6332	.3655	.0979	.8303	.5627	.2950
097	.5069	.2393	.9716	.7040	.4364	.1688	.9012	.6336	.3660	.0984	.8307	.5631	.2955
433100	48.5072	50.2396	51.9720	53.7044	55.4368	57.1692	58.9016	60.6340	62.3664	64.0988	65.8312	67.5636	69.2960

MEGACYCLES PER SECOND

HARMONICS

BASIC FREQ.	164	168	172	176	180	184	188	192	200	208	216	224	232
432800	70.9792	72.7104	74.4416	76.1728	77.9040	79.6352	81.3664	83.0976	86.5600	90.0224	93.4848	96.9472	100.4096
803	.9797	.7109	.4421	.1733	.9045	.6358	.3670	.0982	.5606	.0230	.4854	.9479	.4103
806	.9802	.7114	.4426	.1739	.9051	.6363	.3675	.0988	.5612	.0236	.4861	.9485	.4110
809	.9807	.7119	.4431	.1744	.9056	.6369	.3681	.0993	.5618	.0243	.4867	.9492	.4117
812	.9812	.7124	.4437	.1749	.9062	.6374	.3687	.0999	.5624	.0249	.4874	.9499	.4124
432815	70.9817	72.7129	74.4442	76.1754	77.9067	79.6380	81.3692	83.1005	86.5630	90.0255	93.4880	96.9506	100.4131
818	.9822	.7134	.4447	.1760	.9072	.6385	.3698	.1011	.5636	.0261	.4887	.9512	.4138
821	.9826	.7139	.4452	.1765	.9078	.6391	.3703	.1016	.5642	.0268	.4893	.9519	.4145
824	.9831	.7144	.4457	.1770	.9083	.6396	.3709	.1022	.5648	.0274	.4900	.9526	.4152
827	.9836	.7149	.4462	.1776	.9089	.6402	.3715	.1028	.5654	.0280	.4906	.9532	.4159
432830	70.9841	72.7154	74.4468	76.1781	77.9094	79.6407	81.3720	83.1034	86.5660	90.0286	93.4913	96.9539	100.4166
833	.9846	.7159	.4473	.1786	.9099	.6413	.3726	.1039	.5666	.0293	.4919	.9546	.4173
836	.9851	.7164	.4478	.1791	.9105	.6418	.3732	.1045	.5672	.0299	.4926	.9553	.4180
839	.9856	.7170	.4483	.1797	.9110	.6424	.3737	.1051	.5678	.0305	.4932	.9559	.4186
842	.9861	.7175	.4488	.1802	.9116	.6429	.3743	.1057	.5684	.0311	.4939	.9566	.4193
432845	70.9866	72.7180	74.4493	76.1807	77.9121	79.6435	81.3749	83.1062	86.5690	90.0318	93.4945	96.9573	100.4200
848	.9871	.7185	.4499	.1812	.9126	.6440	.3754	.1068	.5696	.0324	.4952	.9580	.4207
851	.9876	.7190	.4504	.1818	.9132	.6446	.3760	.1074	.5702	.0330	.4958	.9586	.4214
854	.9881	.7195	.4509	.1823	.9137	.6451	.3766	.1080	.5708	.0336	.4965	.9593	.4221
857	.9885	.7200	.4514	.1828	.9143	.6457	.3771	.1085	.5714	.0343	.4971	.9600	.4228
432860	70.9890	72.7205	74.4519	76.1834	77.9148	79.6462	81.3777	83.1091	86.5720	90.0349	93.4978	96.9606	100.4235
863	.9895	.7210	.4524	.1839	.9153	.6468	.3782	.1097	.5726	.0355	.4984	.9613	.4242
866	.9900	.7215	.4530	.1844	.9159	.6473	.3788	.1103	.5732	.0361	.4991	.9620	.4249
869	.9905	.7220	.4535	.1849	.9164	.6479	.3794	.1108	.5738	.0368	.4997	.9627	.4256
872	.9910	.7225	.4540	.1855	.9170	.6484	.3799	.1114	.5744	.0374	.5004	.9633	.4263
432875	70.9915	72.7230	74.4545	76.1860	77.9175	79.6490	81.3805	83.1120	86.5750	90.0380	93.5010	96.9640	100.4270
878	.9920	.7235	.4550	.1865	.9180	.6496	.3811	.1126	.5756	.0386	.5016	.9647	.4277
881	.9925	.7240	.4555	.1871	.9186	.6501	.3816	.1132	.5762	.0392	.5023	.9653	.4284
884	.9930	.7245	.4560	.1876	.9191	.6507	.3822	.1137	.5768	.0399	.5029	.9660	.4291
887	.9935	.7250	.4566	.1881	.9197	.6512	.3828	.1143	.5774	0405	.5036	.9667	.4298
432890	70.9940	72.7255	74.4571	76.1886	77.9202	79.6518	81.3833	83.1149	86.5780	90.0411	93.5042	96.9674	100.4305
893	.9945	.7260	.4576	.1892	.9207	.6523	.3839	.1155	.5786	.0417	.5049	.9680	.4312
896	.9949	.7265	.4581	.1897	.9213	.6529	.3844	.1160	.5792	.0424	.5055	.9687	.4319
899	.9954	.7270	.4586	.1902	.9218	.6534	.3850	.1166	.5798	.0430	.5062	.9694	.4326
902	.9959	.7275	.4591	.1908	.9224	.6540	.3856	.1172	.5804	.0436	.5068	.9700	.4333
432905	70.9964	72.7280	74.4597	76.1913	77.9229	79.6545	81.3861	83.1178	86.5810	90.0442	93.5075	96.9707	100.4340
908	.9969	.7285	.4602	.1918	.9234	.6551	.3867	.1183	.5816	.0449	.5081	.9714	.4347
911	.9974	.7290	.4607	.1923	.9240	.6556	.3873	.1189	.5822	.0455	.5088	.9721	.4354
914	.9979	.7296	.4612	.1929	.9245	.6562	.3878	.1195	.5828	.0461	.5094	.9727	.4360
917	.9984	.7301	.4617	.1934	.9251	.6567	.3884	.1201	.5834	.0467	.5101	.9734	.4367
432920	70.9989	72.7306	74.4622	76.1939	77.9256	79.6573	81.3890	83.1206	86.5840	90.0474	93.5107	96.9741	100.4374
923	.9994	.7311	.4628	.1944	.9261	.6578	.3895	.1212	.5846	.0480	.5114	.9748	.4381
926	.9999	.7316	.4633	.1950	.9267	.6584	.3901	.1218	.5852	.0486	.5120	.9754	.4388
929	71.0004	.7321	.4638	.1955	.9272	.6589	.3907	.1224	.5858	.0492	.5127	.9761	.4395
932	.0008	.7326	.4643	.1960	.9278	.6595	.3912	.1229	.5864	.0499	.5133	.9768	.4402
432935	71.0013	72.7331	74.4648	76.1966	77.9283	79.6600	81.3918	83.1235	86.5870	90.0505	93.5140	96.9774	100.4409
938	.0018	.7336	.4653	.1971	.9288	.6606	.3923	.1241	.5876	.0511	.5146	.9781	.4416
941	.0023	.7341	.4659	.1976	.9294	.6611	.3929	.1247	.5882	.0517	.5153	.9788	.4423
944	.0028	.7346	.4664	.1981	.9299	.6617	.3935	.1252	.5888	.0524	.5159	.9795	.4430
947	.0033	.7351	.4669	.1987	.9305	.6622	.3940	.1258	.5894	.0530	.5166	.9801	.4437
432950	71.0038	72.7356	74.4674	76.1992	77.9310	79.6628	81.3946	83.1264	86.5900	90.0536	93.5172	96.9808	100.4444
953	.0043	.7361	.4679	.1997	.9315	.6634	.3952	.1270	.5906	.0542	.5178	.9815	.4451
956	.0048	.7366	.4684	.2003	.9321	.6639	.3957	.1276	.5912	.0548	.5185	.9821	.4458
959	.0053	.7371	.4689	.2008	.9326	.6645	.3963	.1281	.5918	.0555	.5191	.9828	.4465
962	.0058	.7376	.4695	.2013	.9332	.6650	.3969	.1287	.5924	.0561	.5198	.9835	.4472
432965	71.0063	72.7381	74.4700	76.2018	77.9337	79.6656	81.3974	83.1293	86.5930	90.0567	93.5204	96.9842	100.4479
968	.0068	.7386	.4705	.2024	.9342	.6661	.3980	.1299	.5936	.0573	.5211	.9848	.4486
971	.0072	.7391	.4710	.2029	.9348	.6667	.3985	.1304	.5942	.0580	.5217	.9855	.4493
974	.0077	.7396	.4715	.2034	.9353	.6672	.3991	.1310	.5948	.0586	.5224	.9862	.4500
977	.0082	.7401	.4720	.2040	.9359	.6678	.3997	.1316	.5954	.0592	.5230	.9868	.4507
432980	71.0087	72.7406	74.4726	76.2045	77.9364	79.6683	81.4002	83.1322	86.5960	90.0598	93 5237	96.9875	100.4514
983	.0092	.7411	.4731	.2050	.9369	.6689	.4008	.1327	.5966	.0605	.5243	.9882	.4521
986	.0097	.7416	.4736	.2055	.9375	.6694	.4014	.1333	.5972	.0611	.5250	.9889	.4528
989	.0102	.7422	.4741	.2061	.9380	.6700	.4019	.1339	.5978	.0617	.5256	.9895	.4534
992	.0107	.7427	.4746	.2066	.9386	.6705	.4025	.1345	.5984	.0623	.5263	.9902	.4541
432995	71.0112	72.7432	74.4751	76.2071	77.9391	79.6711	81.4031	83.1350	86.5990	90.0630	93.5269	96.9909	100.4548
998	.0117	.7437	.4757	.2076	.9396	.6716	.4036	.1356	.5996	.0636	.5276	.9916	.4555
433001	.0122	.7442	.4762	.2082	.9402	.6722	.4042	.1362	.6002	.0642	.5282	.9922	.4562
004	.0127	.7447	.4767	.2087	.9407	.6727	.4048	.1368	.6008	.0648	.5289	.9929	.4569
007	.0131	.7452	.4772	.2092	.9413	.6733	.4053	.1373	.6014	.0655	.5295	.9936	.4576
433010	71.0136	72.7457	74.4777	76.2098	77.9418	79.6738	81.4059	83.1379	86.6020	90.0661	93.5302	96.9942	100.4583
013	.0141	.7462	.4782	.2103	.9423	.6744	.4064	.1385	.6026	.0667	.5308	.9949	.4590
016	.0146	.7467	.4788	.2108	.9429	.6749	.4070	.1391	.6032	.0673	.5315	.9956	.4597
019	.0151	.7472	.4793	.2113	.9434	.6755	.4076	.1396	.6038	.0680	.5321	.9963	.4604
022	.0156	.7477	.4798	.2119	.9440	.6760	.4081	.1402	.6044	.0686	.5328	.9969	.4611
433025	71.0161	72.7482	74.4803	76.2124	77.9445	79.6766	81.4087	83.1408	86.6050	90.0692	93.5334	96.9976	100.4618
028	.0166	.7487	.4808	.2129	.9450	.6772	.4093	.1414	.6056	.0698	.5340	.9983	.4625
031	.0171	.7492	.4813	.2135	.9456	.6777	.4098	.1420	.6062	.0704	.5347	.9989	.4632
034	.0176	.7497	.4818	.2140	.9461	.6783	.4104	.1425	.6068	.0711	.5353	.9996	.4639
037	.0181	.7502	.4824	.2145	.9467	.6788	.4110	.1431	.6074	.0717	.5360	97.0003	.4646
433040	71.0186	72.7507	74.4829	76.2150	77.9472	79.6794	81.4115	83.1437	86.6080	90.0723	93.5366	97.0010	100.4653
043	.0191	.7512	.4834	.2156	.9477	.6799	.4121	.1443	.6086	.0729	.5373	.0016	.4660
046	.0195	.7517	.4839	.2161	.9483	.6805	.4126	.1448	.6092	.0736	.5379	.0023	.4667
049	.0200	.7522	.4844	.2166	.9488	.6810	.4132	.1454	.6098	.0742	.5386	.0030	.4674
052	.0205	.7527	.4849	.2172	.9494	.6816	.4138	.1460	.6104	.0748	.5392	.0036	.4681
433055	71.0210	72.7532	74.4855	76.2177	77.9499	79.6821	81.4143	83.1466	86.6110	90.0754	93.5399	97.0043	100.4688
058	.0215	.7537	.4860	.2182	.9504	.6827	.4149	.1471	.6116	.0761	.5405	.0050	.4695
061	.0220	.7542	.4865	.2187	.9510	.6832	.4155	.1477	.6122	.0767	.5412	.0057	.4702
064	.0225	.7548	.4870	.2193	.9515	.6838	.4160	.1483	.6128	.0773	.5418	.0063	.4708
067	.0230	.7553	.4875	.2198	.9521	.6843	.4166	.1489	.6134	.0779	.5425	.0070	.4715
433070	71.0235	72.7558	74.4880	76.2203	77.9526	79.6849	81.4172	83.1494	86.6140	90.0786	93.5431	97.0077	100.4722
073	.0240	.7563	.4886	.2208	.9531	.6854	.4177	.1500	.6146	.0792	.5438	.0084	.4729
076	.0245	.7568	.4891	.2214	.9537	.6860	.4183	.1506	.6152	.0798	.5444	.0090	.4736
079	.0250	.7573	.4896	.2219	.9542	.6865	.4189	.1512	.6158	.0804	.5451	.0097	.4743
082	.0254	.7578	.4901	.2224	.9548	.6871	.4194	.1517	.6164	.0811	.5457	.0104	.4750
433085	71.0259	72.7583	74.4906	76.2230	77.9553	79.6876	81.4200	83.1523	86.6170	90.0817	93.5464	97.0110	100.4757
088	.0264	.7588	.4911	.2235	.9558	.6882	.4205	.1529	.6176	.0823	.5470	.0117	.4764
091	.0269	.7593	.4917	.2240	.9564	.6887	.4211	.1535	.6182	.0829	.5477	.0124	.4771
094	.0274	.7598	.4922	.2245	.9569	.6893	.4217	.1540	.6188	.0836	.5483	.0131	.4778
097	.0279	.7603	.4927	.2251	.9575	.6898	.4222	.1546	.6194	.0842	.5490	.0137	.4785
433100	71.0284	72.7608	74.4932	76.2256	77.9580	79.6904	81.4228	83.1552	86.6200	90.0848	93.5496	97.0144	100.4792

MEGACYCLES PER SECOND

HARMONICS

BASIC FREQ.	112	116	120	124	128	132	136	140	144	148	152	156	160
433100	48.5072	50.2396	51.9720	53.7044	55.4368	57.1692	58.9016	60.6340	62.3664	64.0988	65.8312	67.5636	69.2960
103	.5075	.2399	.9724	.7048	.4372	.1696	.9020	.6344	.3668	.0992	.8317	.5641	.2965
106	.5079	.2403	.9727	.7051	.4376	.1700	.9024	.6348	.3673	.0997	.8321	.5645	.2970
109	.5082	.2406	.9731	.7055	.4380	.1704	.9028	.6353	.3677	.1001	.8326	.5650	.2974
112	.5085	.2410	.9734	.7059	.4383	.1708	.9032	.6357	.3681	.1006	.8330	.5655	.2979
433115	48.5089	50.2413	51.9738	53.7063	55.4387	57.1712	58.9036	60.6361	62.3686	64.1010	65.8335	67.5659	69.2984
118	.5092	.2417	.9742	.7066	.4391	.1716	.9040	.6365	.3690	.1015	.8339	.5664	.2989
121	.5096	.2420	.9745	.7070	.4395	.1720	.9045	.6369	.3694	.1019	.8344	.5669	.2994
124	.5099	.2424	.9749	.7074	.4399	.1724	.9049	.6374	.3699	.1024	.8348	.5673	.2998
127	.5102	.2427	.9752	.7077	.4403	.1728	.9053	.6378	.3703	.1028	.8353	.5678	.3003
433130	48.5106	50.2431	51.9756	53.7081	55.4406	57.1732	58.9057	60.6382	62.3707	64.1032	65.8358	67.5683	69.3008
133	.5109	.2434	.9760	.7085	.4410	.1736	.9061	.6386	.3712	.1037	.8362	.5687	.3013
136	.5112	.2438	.9763	.7089	.4414	.1740	.9065	.6390	.3716	.1041	.8367	.5692	.3018
139	.5116	.2441	.9767	.7092	.4418	.1743	.9069	.6395	.3720	.1046	.8371	.5697	.3022
142	.5119	.2445	.9770	.7096	.4422	.1747	.9073	.6399	.3724	.1050	.8376	.5702	.3027
433145	48.5122	50.2448	51.9774	53.7100	55.4426	57.1751	58.9077	60.6403	62.3729	64.1055	65.8380	67.5706	69.3032
148	.5126	.2452	.9778	.7104	.4429	.1755	.9081	.6407	.3733	.1059	.8385	.5711	.3037
151	.5129	.2455	.9781	.7107	.4433	.1759	.9085	.6411	.3737	.1063	.8390	.5716	.3042
154	.5132	.2459	.9785	.7111	.4437	.1763	.9089	.6416	.3742	.1068	.8394	.5720	.3046
157	.5136	.2462	.9788	.7115	.4441	.1767	.9094	.6420	.3746	.1072	.8399	.5725	.3051
433160	48.5139	50.2466	51.9792	53.7118	55.4445	57.1771	58.9098	60.6424	62.3750	64.1077	65.8403	67.5730	69.3056
163	.5143	.2469	.9796	.7122	.4449	.1775	.9102	.6428	.3755	.1081	.8408	.5734	.3061
166	.5146	.2473	.9799	.7126	.4452	.1779	.9106	.6432	.3759	.1086	.8412	.5739	.3066
169	.5149	.2476	.9803	.7130	.4456	.1783	.9110	.6437	.3763	.1090	.8417	.5744	.3070
172	.5153	.2480	.9806	.7133	.4460	.1787	.9114	.6441	.3768	.1095	.8421	.5748	.3075
433175	48.5156	50.2483	51.9810	53.7137	55.4464	57.1791	58.9118	60.6445	62.3772	64.1099	65.8426	67.5753	69.3080
178	.5159	.2486	.9814	.7141	.4468	.1795	.9122	.6449	.3776	.1103	.8431	.5758	.3085
181	.5163	.2490	.9817	.7144	.4472	.1799	.9126	.6453	.3781	.1108	.8435	.5762	.3090
184	.5166	.2493	.9821	.7148	.4476	.1803	.9130	.6458	.3785	.1112	.8440	.5767	.3094
187	.5169	.2497	.9824	.7152	.4479	.1807	.9134	.6462	.3789	.1117	.8444	.5772	.3099
433190	48.5173	50.2500	51.9828	53.7156	55.4483	57.1811	58.9138	60.6466	62.3794	64.1121	65.8449	67.5776	69.3104
193	.5176	.2504	.9832	.7159	.4487	.1815	.9142	.6470	.3798	.1126	.8453	.5781	.3109
196	.5180	.2507	.9835	.7163	.4491	.1819	.9147	.6474	.3802	.1130	.8458	.5786	.3114
199	.5183	.2511	.9839	.7167	.4495	.1823	.9151	.6479	.3807	.1135	.8462	.5790	.3118
202	.5186	.2514	.9842	.7170	.4499	.1827	.9155	.6483	.3811	.1139	.8467	.5795	.3123
433205	48.5190	50.2518	51.9846	53.7174	55.4502	57.1831	58.9159	60.6487	62.3815	64.1143	65.8472	67.5800	69.3128
208	.5193	.2521	.9850	.7178	.4506	.1835	.9163	.6491	.3820	.1148	.8476	.5804	.3133
211	.5196	.2525	.9853	.7182	.4510	.1839	.9167	.6495	.3824	.1152	.8481	.5809	.3138
214	.5200	.2528	.9857	.7185	.4514	.1842	.9171	.6500	.3828	.1157	.8485	.5814	.3142
217	.5203	.2532	.9860	.7189	.4518	.1846	.9175	.6504	.3832	.1161	.8490	.5819	.3147
433220	48.5206	50.2535	51.9864	53.7193	55.4522	57.1850	58.9179	60.6508	62.3837	64.1166	65.8494	67.5823	69.3152
223	.5210	.2539	.9868	.7197	.4525	.1854	.9183	.6512	.3841	.1170	.8499	.5828	.3157
226	.5213	.2542	.9871	.7200	.4529	.1858	.9187	.6516	.3845	.1174	.8504	.5833	.3162
229	.5216	.2546	.9875	.7204	.4533	.1862	.9191	.6521	.3850	.1179	.8508	.5837	.3166
232	.5220	.2549	.9878	.7208	.4537	.1866	.9196	.6525	.3854	.1183	.8513	.5842	.3171
433235	48.5223	50.2553	51.9882	53.7211	55.4541	57.1870	58.9200	60.6529	62.3858	64.1188	65.8517	67.5847	69.3176
238	.5227	.2556	.9886	.7215	.4545	.1874	.9204	.6533	.3863	.1192	.8522	.5851	.3181
241	.5230	.2560	.9889	.7219	.4548	.1878	.9208	.6537	.3867	.1197	.8526	.5856	.3186
244	.5233	.2563	.9893	.7223	.4552	.1882	.9212	.6542	.3871	.1201	.8531	.5861	.3190
247	.5237	.2567	.9896	.7226	.4556	.1886	.9216	.6546	.3876	.1206	.8535	.5865	.3195
433250	48.5240	50.2570	51.9900	53.7230	55.4560	57.1890	58.9220	60.6550	62.3880	64.1210	65.8540	67.5870	69.3200
253	.5243	.2573	.9904	.7234	.4564	.1894	.9224	.6554	.3884	.1214	.8545	.5875	.3205
256	.5247	.2577	.9907	.7237	.4568	.1898	.9228	.6558	.3889	.1219	.8549	.5879	.3210
259	.5250	.2580	.9911	.7241	.4572	.1902	.9232	.6563	.3893	.1223	.8554	.5884	.3214
262	.5253	.2584	.9914	.7245	.4575	.1906	.9236	.6567	.3897	.1228	.8558	.5889	.3219
433265	48.5257	50.2587	51.9918	53.7249	55.4579	57.1910	58.9240	60.6571	62.3902	64.1232	65.8563	67.5893	69.3224
268	.5260	.2591	.9922	.7252	.4583	.1914	.9244	.6575	.3906	.1237	.8567	.5898	.3229
271	.5264	.2594	.9925	.7256	.4587	.1918	.9249	.6579	.3910	.1241	.8572	.5903	.3234
274	.5267	.2598	.9929	.7260	.4591	.1922	.9253	.6584	.3915	.1246	.8576	.5907	.3238
277	.5270	.2601	.9932	.7263	.4595	.1926	.9257	.6588	.3919	.1250	.8581	.5912	.3243
433280	48.5274	50.2605	51.9936	53.7267	55.4598	57.1930	58.9261	60.6592	62.3923	64.1254	65.8586	67.5917	69.3248
283	.5277	.2608	.9940	.7271	.4602	.1934	.9265	.6596	.3928	.1259	.8590	.5921	.3253
286	.5280	.2612	.9943	.7275	.4606	.1938	.9269	.6600	.3932	.1263	.8595	.5926	.3258
289	.5284	.2615	.9947	.7278	.4610	.1941	.9273	.6605	.3936	.1268	.8599	.5931	.3262
292	.5287	.2619	.9950	.7282	.4614	.1945	.9277	.6609	.3940	.1272	.8604	.5936	.3267
433295	48.5290	50.2622	51.9954	53.7286	55.4618	57.1949	58.9281	60.6613	62.3945	64.1277	65.8608	67.5940	69.3272
298	.5294	.2626	.9958	.7290	.4621	.1953	.9285	.6617	.3949	.1281	.8613	.5945	.3277
301	.5297	.2629	.9961	.7293	.4625	.1957	.9289	.6621	.3953	.1285	.8618	.5950	.3282
304	.5300	.2633	.9965	.7297	.4629	.1961	.9293	.6626	.3958	.1290	.8622	.5954	.3286
307	.5304	.2636	.9968	.7301	.4633	.1965	.9298	.6630	.3962	.1294	.8627	.5959	.3291
433310	48.5307	50.2640	51.9972	53.7304	55.4637	57.1969	58.9302	60.6634	62.3966	64.1299	65.8631	67.5964	69.3296
313	.5311	.2643	.9976	.7308	.4641	.1973	.9306	.6638	.3971	.1303	.8636	.5968	.3301
316	.5314	.2647	.9979	.7312	.4644	.1977	.9310	.6642	.3975	.1308	.8640	.5973	.3306
319	.5317	.2650	.9983	.7316	.4648	.1981	.9314	.6647	.3979	.1312	.8645	.5978	.3310
322	.5321	.2654	.9986	.7319	.4652	.1985	.9318	.6651	.3984	.1317	.8649	.5982	.3315
433325	48.5324	50.2657	51.9990	53.7323	55.4656	57.1989	58.9322	60.6655	62.3988	64.1321	65.8654	67.5987	69.3320
328	.5327	.2660	.9994	.7327	.4660	.1993	.9326	.6659	.3992	.1325	.8659	.5992	.3325
331	.5331	.2664	.9997	.7330	.4664	.1997	.9330	.6663	.3997	.1330	.8663	.5996	.3330
334	.5334	.2667	52.0001	.7334	.4668	.2001	.9334	.6668	.4001	.1334	.8668	.6001	.3334
337	.5337	.2671	.0004	.7338	.4671	.2005	.9338	.6672	.4005	.1339	.8672	.6006	.3339
433340	48.5341	50.2674	52.0008	53.7342	55.4675	57.2009	58.9342	60.6676	62.4010	64.1343	65.8677	67.6010	69.3344
343	.5344	.2678	.0012	.7345	.4679	.2013	.9346	.6680	.4014	.1348	.8681	.6015	.3349
346	.5348	.2681	.0015	.7349	.4683	.2017	.9351	.6684	.4018	.1352	.8686	.6020	.3354
349	.5351	.2685	.0019	.7353	.4687	.2021	.9355	.6689	.4023	.1357	.8690	.6024	.3358
352	.5354	.2688	.0022	.7356	.4691	.2025	9359	.6693	.4027	.1361	.8695	.6029	.3363
433355	48.5358	50.2692	52.0026	53.7360	55.4694	57.2029	58.9363	60.6697	62.4031	64.1365	65.8700	67.6034	69.3368
358	.5361	.2695	.0030	.7364	.4698	.2033	.9367	.6701	.4036	.1370	.8704	.6038	.3373
361	.5364	.2699	.0033	.7368	.4702	.2037	.9371	.6705	.4040	.1374	.8709	.6043	.3378
364	.5368	.2702	.0037	.7371	.4706	.2040	.9375	.6710	.4044	.1379	.8713	.6048	.3382
367	.5371	.2706	.0040	.7375	.4710	.2044	.9379	.6714	.4048	.1383	.8718	.6053	.3387
433370	48.5374	50.2709	52.0044	53.7379	55.4714	57.2048	58.9383	60.6718	62.4053	64.1388	65.8722	67.6057	69.3392
373	.5378	.2713	.0048	.7383	.4717	.2052	.9387	.6722	.4057	.1392	.8727	.6062	.3397
376	.5381	.2716	.0051	.7386	.4721	.2056	.9391	.6726	.4061	.1396	.8732	.6067	.3402
379	.5384	.2720	.0055	.7390	.4725	.2060	.9395	.6731	.4066	.1401	.8736	.6071	.3406
382	.5388	.2723	.0058	.7394	.4729	.2064	.9400	.6735	.4070	.1405	.8741	.6076	.3411
433385	48.5391	50.2727	52.0062	53.7397	55.4733	57.2068	58.9404	60.6739	62.4074	64.1410	65.8745	67.6081	69.3416
388	.5395	.2730	.0066	.7401	.4737	.2072	.9408	.6743	.4079	.1414	.8750	.6085	.3421
391	.5398	.2734	.0069	.7405	.4740	.2076	.9412	.6747	.4083	.1419	.8754	.6090	.3426
394	.5401	.2737	.0073	.7409	.4744	.2080	.9416	.6752	.4087	.1423	.8759	.6095	.3430
397	.5405	.2741	.0076	.7412	.4748	.2084	.9420	.6756	.4092	.1428	.8763	.6099	.3435
433400	48.5408	50.2744	52.0080	53.7416	55.4752	57.2088	58.9424	60.6760	62.4096	64.1432	65.8768	67.6104	69.3440

MEGACYCLES PER SECOND

HARMONICS

BASIC FREQ.	164	168	172	176	180	184	188	192	200	208	216	224	232
433100	71.0284	72.7608	74.4932	76.2256	77.9580	79.6904	81.4228	83.1552	86.6200	90.0848	93.5496	97.0144	100.4792
103	.0289	.7613	.4937	.2261	.9585	.6910	.4234	.1558	.6206	.0854	.5502	.0151	.4799
106	.0294	.7618	.4942	.2267	.9591	.6915	.4239	.1564	.6212	.0860	.5509	.0157	.4806
109	.0299	.7623	.4947	.2272	.9596	.6921	.4245	.1569	.6218	.0867	.5515	.0164	.4813
112	.0304	.7628	.4953	.2277	.9602	.6926	.4251	.1575	.6224	.0873	.5522	.0171	.4820
433115	71.0309	72.7633	74.4958	76.2282	77.9607	79.6932	81.4256	83.1581	86.6230	90.0879	93.5528	97.0178	100.4827
118	.0314	.7638	.4963	.2288	.9612	.6937	.4262	.1587	.6236	.0885	.5535	.0184	.4834
121	.0318	.7643	.4968	.2293	.9618	.6943	.4267	.1592	.6242	.0892	.5541	.0191	.4841
124	.0323	.7648	.4973	.2298	.9623	.6948	.4273	.1598	.6248	.0898	.5548	.0198	.4848
127	.0328	.7653	.4978	.2304	.9629	.6954	.4279	.1604	.6254	.0904	.5554	.0204	.4855
433130	71.0333	72.7658	74.4984	76.2309	77.9634	79.6959	81.4284	83.1610	86.6260	90.0910	93.5561	97.0211	100.4862
133	.0338	.7663	.4989	.2314	.9639	.6965	.4290	.1615	.6266	.0917	.5567	.0218	.4869
136	.0343	.7668	.4994	.2319	.9645	.6970	.4296	.1621	.6272	.0923	.5574	.0225	.4876
139	.0348	.7674	.4999	.2325	.9650	.6976	.4301	.1627	.6278	.0929	.5580	.0231	.4882
142	.0353	.7679	.5004	.2330	.9656	.6981	.4307	.1633	.6284	.0935	.5587	.0238	.4889
433145	71.0358	72.7684	74.5009	76.2335	77.9661	79.6987	81.4313	83.1638	86.6290	90.0942	93.5593	97.0245	100.4896
148	.0363	.7689	.5015	.2340	.9666	.6992	.4318	.1644	.6296	.0948	.5600	.0252	.4903
151	.0368	.7694	.5020	.2346	.9672	.6998	.4324	.1650	.6302	.0954	.5606	.0258	.4910
154	.0373	.7699	.5025	.2351	.9677	.7003	.4330	.1656	.6308	.0960	.5613	.0265	.4917
157	.0377	.7704	.5030	.2356	.9683	.7009	.4335	.1661	.6314	.0967	.5619	.0272	.4924
433160	71.0382	72.7709	74.5035	76.2362	77.9688	79.7014	81.4341	83.1667	86.6320	90.0973	93.5626	97.0278	100.4931
163	.0387	.7714	.5040	.2367	.9693	.7020	.4346	.1673	.6326	.0979	.5632	.0285	.4938
166	.0392	.7719	.5046	.2372	.9699	.7025	.4352	.1679	.6332	.0985	.5639	.0292	.4945
169	.0397	.7724	.5051	.2377	.9704	.7031	.4358	.1684	.6338	.0992	.5645	.0299	.4952
172	.0402	.7729	.5056	.2383	.9710	.7036	.4363	.1690	.6344	.0998	.5652	.0305	.4959
433175	71.0407	72.7734	74.5061	76.2388	77.9715	79.7042	81.4369	83.1696	86.6350	90.1004	93.5658	97.0312	100.4966
178	.0412	.7739	.5066	.2393	.9720	.7048	.4375	.1702	.6356	.1010	.5664	.0319	.4973
181	.0417	.7744	.5071	.2399	.9726	.7053	.4380	.1708	.6362	.1016	.5671	.0325	.4980
184	.0422	.7749	.5076	.2404	.9731	.7059	.4386	.1713	.6368	.1023	.5677	.0332	.4987
187	.0427	.7754	.5082	.2409	.9737	.7064	.4392	.1719	.6374	.1029	.5684	.0339	.4994
433190	71.0432	72.7759	74.5087	76.2414	77.9742	79.7070	81.4397	83.1725	86.6380	90.1035	93.5690	97.0346	100.5001
193	.0437	.7764	.5092	.2420	.9747	.7075	.4403	.1731	.6386	.1041	.5697	.0352	.5008
196	.0441	.7769	.5097	.2425	.9753	.7081	.4408	.1736	.6392	.1048	.5703	.0359	.5015
199	.0446	.7774	.5102	.2430	.9758	.7086	.4414	.1742	.6398	.1054	.5710	.0366	.5022
202	.0451	.7779	.5107	.2436	.9764	.7092	.4420	.1748	.6404	.1060	.5716	.0372	.5029
433205	71.0456	72.7784	74.5113	76.2441	77.9769	79.7097	81.4425	83.1754	86.6410	90.1066	93.5723	97.0379	100 5036
208	.0461	.7789	.5118	.2446	.9774	.7103	.4431	.1759	.6416	.1073	.5729	.0386	.5043
211	.0466	.7794	.5123	.2451	.9780	.7108	.4437	.1765	.6422	.1079	.5736	.0393	.5050
214	.0471	.7800	.5128	.2457	.9785	.7114	.4442	.1771	.6428	.1085	.5742	.0399	.5056
217	.0476	.7805	.5133	.2462	.9791	.7119	.4448	.1777	.6434	.1091	.5749	.0406	.5063
433220	71.0481	72.7810	74.5138	76.2467	77.9796	79.7125	81.4454	83.1782	86.6440	90.1098	93.5755	97.0413	100.5070
223	.0486	.7815	.5144	.2472	.9801	.7130	.4459	.1788	.6446	.1104	.5762	.0420	.5077
226	.0491	.7820	.5149	.2478	.9807	.7136	.4465	.1794	.6452	.1110	.5768	.0426	.5084
229	.0496	.7825	.5154	.2483	.9812	.7141	.4471	.1800	.6458	.1116	.5775	.0433	.5091
232	.0500	.7830	.5159	.2488	.9818	.7147	.4476	.1805	.6464	.1123	.5781	.0440	.5098
433235	71.0505	72.7835	74.5164	76.2494	77.9823	79.7152	81.4482	83.1811	86.6470	90.1129	93.5788	97.0446	100.5105
238	.0510	.7840	.5169	.2499	.9828	.7158	.4487	.1817	.6476	.1135	.5794	.0453	.5112
241	.0515	.7845	.5175	.2504	.9834	.7163	.4493	.1823	.6482	.1141	.5801	.0460	.5119
244	.0520	.7850	.5180	.2509	.9839	.7169	.4499	.1828	.6488	.1148	.5807	.0467	.5126
247	.0525	.7855	.5185	.2515	.9845	.7174	.4504	.1834	.6494	.1154	.5814	.0473	.5133
433250	71.0530	72.7860	74.5190	76.2520	77.9850	79.7180	81.4510	83.1840	86.6500	90.1160	93.5820	97.0480	100.5140
253	.0535	.7865	.5195	.2525	.9855	.7186	.4516	.1846	.6506	.1166	.5826	.0487	.5147
256	.0540	.7870	.5200	.2531	.9861	.7191	.4521	.1852	.6512	.1172	.5833	.0493	.5154
259	.0545	.7875	.5205	.2536	.9866	.7197	.4527	.1857	.6518	.1179	.5839	.0500	.5161
262	.0550	.7880	.5211	.2541	.9872	.7202	.4533	.1863	.6524	.1185	.5846	.0507	.5168
433265	71.0555	72.7885	74.5216	76.2546	77.9877	79.7208	81.4538	83.1869	86.6530	90.1191	93.5852	97.0514	100.5175
268	.0560	.7890	.5221	.2552	.9882	.7213	.4544	.1875	.6536	.1197	.5859	.0520	.5182
271	.0564	.7895	.5226	.2557	.9888	.7219	.4549	.1880	.6542	.1204	.5865	.0527	.5189
274	.0569	.7900	.5231	.2562	.9893	.7224	.4555	.1886	.6548	.1210	.5872	.0534	.5196
277	.0574	.7905	.5236	.2568	.9899	.7230	.4561	.1892	.6554	.1216	.5878	.0540	.5203
433280	71.0579	72.7910	74.5242	76.2573	77.9904	79.7235	81.4566	83.1898	86.6560	90.1222	93.5885	97.0547	100.5210
283	.0584	.7915	.5247	.2578	.9909	.7241	.4572	.1903	.6566	.1229	.5891	.0554	.5217
286	.0589	.7920	.5252	.2583	.9915	.7246	.4578	.1909	.6572	.1235	.5898	.0561	.5224
289	.0594	.7926	.5257	.2589	.9920	.7252	.4583	.1915	.6578	.1241	.5904	.0567	.5230
292	.0599	.7931	.5262	.2594	.9926	.7257	.4589	.1921	.6584	.1247	.5911	.0574	.5237
433295	71.0604	72.7936	74.5267	76.2599	77.9931	79.7263	81.4595	83.1926	86.6590	90.1254	93.5917	97.0581	100.5244
298	.0609	.7941	.5273	.2604	.9936	.7268	.4600	.1932	.6596	.1260	.5924	.0588	.5251
301	.0614	.7946	.5278	.2610	.9942	.7274	.4606	.1938	.6602	.1266	.5930	.0594	.5258
304	.0619	.7951	.5283	.2615	.9947	.7279	.4612	.1944	.6608	.1272	.5937	.0601	.5265
307	.0623	.7956	.5288	.2620	.9953	.7285	.4617	.1949	.6614	.1279	.5943	.0608	.5272
433310	71.0628	72.7961	74.5293	76.2626	77.9958	79.7290	81.4623	83.1955	86.6620	90.1285	93.5950	97.0614	100.5279
313	.0633	.7966	.5298	.2631	.9963	.7296	.4628	.1961	.6626	.1291	.5956	.0621	.5286
316	.0638	.7971	.5304	.2636	.9969	.7301	.4634	.1967	.6632	.1297	.5963	.0628	.5293
319	.0643	.7976	.5309	.2641	.9974	.7307	.4640	.1972	.6638	.1304	.5969	.0635	.5300
322	.0648	.7981	.5314	.2647	.9980	.7312	.4645	.1978	.6644	.1310	.5976	.0641	.5307
433325	71.0653	72.7986	74.5319	76.2652	77.9985	79.7318	81.4651	83.1984	86.6650	90.1316	93.5982	97.0648	100.5314
328	0658	.7991	.5324	.2657	.9990	.7324	.4657	.1990	.6656	.1322	.5988	.0655	.5321
331	.0663	.7996	.5329	.2663	.9996	.7329	.4662	.1996	.6662	.1328	.5995	.0661	.5328
334	.0668	.8001	.5334	.2668	78.0001	.7335	.4668	.2001	.6668	.1335	.6001	.0668	.5335
337	.0673	.8006	.5340	.2673	.0007	.7340	.4674	.2007	.6674	.1341	.6008	.0675	.5342
433340	71.0678	72.8011	74.5345	76.2678	78.0012	79.7346	81.4679	83.2013	86.6680	90.1347	93.6014	97.0682	100.5349
343	.0683	.8016	.5350	.2684	.0017	.7351	.4685	.2019	.6686	.1353	.6021	.0688	.5356
346	.0687	.8021	.5355	.2689	.0023	.7357	.4690	.2024	.6692	.1360	.6027	.0695	.5363
349	.0692	.8026	.5360	.2694	.0028	.7362	.4696	.2030	.6698	.1366	.6034	.0702	.5370
352	.0697	.8031	.5365	.2700	.0034	.7368	.4702	.2036	.6704	.1372	.6040	.0708	.5377
433355	71.0702	72.8036	74.5371	76.2705	78.0039	79.7373	81.4707	83.2042	86.6710	90.1378	93.6047	97.0715	100.5384
358	.0707	.8041	.5376	.2710	.0044	.7379	.4713	.2047	.6716	.1385	.6053	.0722	.5391
361	.0712	.8046	.5381	.2715	.0050	.7384	.4719	.2053	.6722	.1391	.6060	.0729	.5398
364	.0717	.8052	.5386	.2721	.0055	.7390	.4724	.2059	.6728	.1397	.6066	.0735	.5404
367	.0722	.8057	.5391	.2726	.0061	.7395	.4730	.2065	.6734	.1403	.6073	.0742	.5411
433370	71.0727	72.8062	74.5396	76.2731	78.0066	79.7401	81.4736	83.2070	86.6740	90.1410	93.6079	97.0749	100.5418
373	.0732	.8067	.5402	.2736	.0071	.7406	.4741	.2076	.6746	.1416	.6086	.0756	.5425
376	.0737	.8072	.5407	.2742	.0077	.7412	.4747	.2082	.6752	.1422	.6092	.0762	.5432
379	.0742	.8077	.5412	.2747	.0082	.7417	.4753	.2088	.6758	.1428	.6099	.0769	.5439
382	.0746	.8082	.5417	.2752	.0088	.7423	.4758	.2093	.6764	.1435	.6105	.0776	.5446
433385	71.0751	72.8087	74.5422	76.2758	78.0093	79.7428	81.4764	83.2099	86.6770	90.1441	93.6112	97.0782	100.5453
388	.0756	.8092	.5427	.2763	.0098	.7434	.4769	.2105	.6776	.1447	.6118	.0789	.5460
391	.0761	.8097	.5433	.3768	.0104	.7439	.4775	.2111	.6782	.1453	.6125	.0796	.5467
394	.0766	.8102	.5438	.2773	.0109	.7445	.4781	.2116	.6788	.1460	.6131	.0803	.5474
397	.0771	.8107	.5443	.2779	.0115	.7450	.4786	.2122	.6794	.1466	.6138	.0809	.5481
433400	71.0776	72.8112	74.5448	76.2784	78.0120	79.7456	81.4792	83.2128	86.6800	90.1472	93.6144	97.0816	100.5488

HARMONICS

BASIC FREQ.	112	116	120	124	128	132	136	140	144	148	152	156	160
433400	48.5408	50.2744	52.0080	53.7416	55.4752	57.2088	58.9424	60.6760	62.4096	64.1432	65.8768	67.6104	69.3440
403	.5411	.2747	.0084	.7420	.4756	.2092	.9428	.6764	.4100	.1436	.8773	.6109	.3445
406	.5415	.2751	.0087	.7423	.4760	.2096	.9432	.6768	.4105	.1441	.8777	.6113	.3450
409	.5418	.2754	.0091	.7427	.4764	.2100	.9436	.6773	.4109	.1445	.8782	.6118	.3454
412	.5421	.2758	.0094	.7431	.4767	.2104	.9440	.6777	.4113	.1450	.8786	.6123	.3459
433415	48.5425	50.2761	52.0098	53.7435	55.4771	57.2108	58.9444	60.6781	62.4118	64.1454	65.8791	67.6127	69.3464
418	.5428	.2765	.0102	.7438	.4775	.2112	.9448	.6785	.4122	.1459	.8795	.6132	.3469
421	.5432	.2768	.0105	.7442	.4779	.2116	.9453	.6789	.4126	.1463	.8800	.6137	.3474
424	.5435	.2772	.0109	.7446	.4783	.2120	.9457	.6794	.4131	.1468	.8804	.6141	.3478
427	.5438	.2775	.0112	.7449	.4787	.2124	.9461	.6798	.4135	.1472	.8809	.6146	.3483
433430	48.5442	50.2779	52.0116	53.7453	55.4790	57.2128	58.9465	60.6802	62.4139	64.1476	65.8814	67.6151	69.3488
433	.5445	.2782	.0120	.7457	.4794	.2132	.9469	.6806	.4144	.1481	.8818	.6155	.3493
436	.5448	.2786	.0123	.7461	.4798	.2136	.9473	.6810	.4148	.1485	.8823	.6160	.3498
439	.5452	.2789	.0127	.7464	.4802	.2139	.9477	.6815	.4152	.1490	.8827	.6165	.3502
442	.5455	.2793	.0130	.7468	.4806	.2143	.9481	.6819	.4156	.1494	.8832	.6170	.3507
433445	48.5458	50.2796	52.0134	53.7472	55.4810	57.2147	58.9485	60.6823	62.4161	64.1499	65.8836	67.6174	69.3512
448	.5462	.2800	.0138	.7476	.4813	.2151	.9489	.6827	.4165	.1503	.8841	.6179	.3517
451	.5465	.2803	.0141	.7479	.4817	.2155	.9493	.6831	.4169	.1507	.8846	.6184	.3522
454	.5468	.2807	.0145	.7483	.4821	.2159	.9497	.6836	.4174	.1512	.8850	.6188	.3526
457	.5472	.2810	.0148	.7487	.4825	.2163	.9502	.6840	.4178	.1516	.8855	.6193	.3531
433460	48.5475	50.2814	52.0152	53.7490	55.4829	57.2167	58.9506	60.6844	62.4182	64.1521	65.8859	67.6198	69.3536
463	.5479	.2817	.0156	.7494	.4833	.2171	.9510	.6848	.4187	.1525	.8864	.6202	.3541
466	.5482	.2821	.0159	.7498	.4836	.2175	.9514	.6852	.4191	.1530	.8868	.6207	.3546
469	.5485	.2824	.0163	.7502	.4840	.2179	.9518	.6857	.4195	.1534	.8873	.6212	.3550
472	.5489	.2828	.0166	.7505	.4844	.2183	.9522	.6861	.4200	.1539	.8877	.6216	.3555
433475	48.5492	50.2831	52.0170	53.7509	55.4848	57.2187	58.9526	60.6865	62.4204	64.1543	65.8882	67.6221	69.3560
478	.5495	.2834	.0174	.7513	.4852	.2191	.9530	.6869	.4208	.1547	.8887	.6226	.3565
481	.5499	.2838	.0177	.7516	.4856	.2195	.9534	.6873	.4213	.1552	.8891	.6230	.3570
484	.5502	.2841	.0181	.7520	.4860	.2199	.9538	.6878	.4217	.1556	.8896	.6235	.3574
487	.5505	.2845	.0184	.7524	.4863	.2203	.9542	.6882	.4221	.1561	.8900	.6240	.3579
433490	48.5509	50.2848	52.0188	53.7528	55.4867	57.2207	58.9546	60.6886	62.4226	64.1565	65.8905	67.6244	69.3584
493	.5512	.2852	.0192	.7531	.4871	.2211	.9550	.6890	.4230	.1570	.8909	.6249	.3589
496	.5516	.2855	.0195	.7535	.4875	.2215	.9555	.6894	.4234	.1574	.8914	.6254	.3594
499	.5519	.2859	.0199	.7539	.4879	.2219	.9559	.6899	.4239	.1579	.8918	.6258	.3598
502	.5522	.2862	.0202	.7542	.4883	.2223	.9563	.6903	.4243	.1583	.8923	.6263	.3603
433505	48.5526	50.2866	52.0206	53.7546	55.4886	57.2227	58.9567	60.6907	62.4247	64.1587	65.8928	67.6268	69.3608
508	.5529	.2869	.0210	.7550	.4890	.2231	.9571	.6911	.4252	.1592	.8932	.6272	.3613
511	.5532	.2873	.0213	.7554	.4894	.2235	.9575	.6915	.4256	.1596	.8937	.6277	.3618
514	.5536	.2876	.0217	.7557	.4898	.2238	.9579	.6920	.4260	.1601	.8941	.6282	.3622
517	.5539	.2880	.0220	.7561	.4902	.2242	.9583	.6924	.4264	.1605	.8946	.6287	.3627
433520	48.5542	50.2883	52.0224	53.7565	55.4906	57.2246	58.9587	60.6928	62.4269	64.1610	65.8950	67.6291	69.3632
523	.5546	.2887	.0228	.7569	.4909	.2250	.9591	.6932	.4273	.1614	.8955	.6296	.3637
526	.5549	.2890	.0231	.7572	.4913	.2254	.9595	.6936	.4277	.1618	.8960	.6301	.3642
529	.5552	.2894	.0235	.7576	.4917	.2258	.9599	.6941	.4282	.1623	.8964	.6305	.3646
532	.5556	.2897	.0238	.7580	.4921	.2262	.9604	.6945	.4286	.1627	.8969	.6310	.3651
433535	48.5559	50.2901	52.0242	53.7583	55.4925	57.2266	58.9608	60.6949	62.4290	64.1632	65.8973	67.6315	69.3656
538	.5563	.2904	.0246	.7587	.4929	.2270	.9612	.6953	.4295	.1636	.8978	.6319	.3661
541	.5566	.2908	.0249	.7591	.4932	.2274	.9616	.6957	.4299	.1641	.8982	.6324	.3666
544	.5569	.2911	.0253	.7595	.4936	.2278	.9620	.6962	.4303	.1645	.8987	.6329	.3670
547	.5573	.2915	.0256	.7598	.4940	.2282	.9624	.6966	.4308	.1650	.8991	.6333	.3675
433550	48.5576	50.2918	52.0260	53.7602	55.4944	57.2286	58.9628	60.6970	62.4312	64.1654	65.8996	67.6338	69.3680
553	.5579	.2921	.0264	.7606	.4948	.2290	.9632	.6974	.4316	.1658	.9001	.6343	.3685
556	.5583	.2925	.0267	.7609	.4952	.2294	.9636	.6978	.4321	.1663	.9005	.6347	.3690
559	.5586	.2928	.0271	.7613	.4956	.2298	.9640	.6983	.4325	.1667	.9010	.6352	.3694
562	.5589	.2932	.0274	.7617	.4959	.2302	.9644	.6987	.4329	.1672	.9014	.6357	.3699
433565	48.5593	50.2935	52.0278	53.7621	55.4963	57.2306	58.9648	60.6991	62.4334	64.1676	65.9019	67.6361	69.3704
568	.5596	.2939	.0282	.7624	.4967	.2310	.9652	.6995	.4338	.1681	.9023	.6366	.3709
571	.5600	.2942	.0285	.7628	.4971	.2314	.9657	.6999	.4342	.1685	.9028	.6371	.3714
574	.5603	.2946	.0289	.7632	.4975	.2318	.9661	.7004	.4347	.1690	.9032	.6375	.3718
577	.5606	.2949	.0292	.7635	.4979	2322	.9665	.7008	.4351	.1694	.9037	.6380	.3723
433580	48.5610	50.2953	52.0296	53.7639	55.4982	57.2326	58.9669	60.7012	62.4355	64.1698	65.9042	67.6385	69.3728
583	.5613	.2956	.0300	.7643	.4986	.2330	.9673	.7016	.4360	.1703	.9046	.6389	.3733
586	.5616	.2960	.0303	.7647	.4990	.2334	.9677	.7020	.4364	.1707	.9051	.6394	.3738
589	.5620	.2963	.0307	.7650	.4994	.2337	.9681	.7025	.4368	.1712	.9055	.6399	.3742
592	.5623	.2967	.0310	.7654	.4998	.2341	.9685	.7029	.4372	.1716	.9060	.6404	.3747
433595	48.5626	50.2970	52.0314	53.7658	55.5002	57.2345	58.9689	60.7033	62.4377	64.1721	65.9064	67.6408	69.3752
598	.5630	.2974	.0318	.7662	.5005	.2349	.9693	.7037	.4381	.1725	.9069	.6413	.3757
601	.5633	.2977	.0321	.7665	.5009	.2353	.9697	.7041	.4385	.1729	.9074	.6418	.3762
604	.5636	.2981	.0325	.7669	.5013	.2357	.9701	.7046	.4390	.1734	.9078	.6422	.3766
607	.5640	.2984	.0328	.7673	.5017	.2361	.9706	.7050	.4394	.1738	.9083	.6427	.3771
433610	48.5643	50.2988	52.0332	53.7676	55.5021	57.2365	58.9710	60.7054	62.4398	64.1743	65.9087	67.6432	69.3776
613	.5647	.2991	.0336	.7680	.5025	.2369	.9714	.7058	.4403	.1747	.9092	.6436	.3781
616	.5650	.2995	.0339	.7684	.5028	.2373	.9718	.7062	.4407	.1752	.9096	.6441	.3786
619	.5653	.2998	.0343	.7688	.5032	.2377	.9722	.7067	.4411	.1756	.9101	.6446	.3790
622	.5657	.3002	.0346	.7691	.5036	.2381	.9726	.7071	.4416	.1761	.9105	.6450	.3795
433625	48.5660	50.3005	52.0350	53.7695	55.5040	57.2385	58.9730	60.7075	62.4420	64.1765	65.9110	67.6455	69.3800
628	.5663	.3008	.0354	.7699	.5044	.2389	.9734	.7079	.4424	.1769	.9115	.6460	.3805
631	.5667	.3012	.0357	.7702	.5048	.2393	.9738	.7083	.4429	.1774	.9119	.6464	.3810
634	.5670	.3015	.0361	.7706	.5052	.2397	.9742	.7088	.4433	.1778	.9124	.6469	.3814
637	.5673	.3019	.0364	.7710	.5055	.2401	.9746	.7092	.4437	.1783	.9128	.6474	.3819
433640	48.5677	50.3022	52.0368	53.7714	55.5059	57.2405	58.9750	60.7096	62.4442	64.1787	65.9133	67.6478	69.3824
643	.5680	.3026	.0372	.7717	.5063	.2409	.9754	.7100	.4446	.1792	.9137	.6483	.3829
646	.5684	.3029	.0375	.7721	.5067	.2413	.9759	.7104	.4450	.1796	.9142	.6488	.3834
649	.5687	.3033	.0379	.7725	.5071	.2417	.9763	.7109	.4455	.1801	.9146	.6492	.3838
652	.5690	.3036	.0382	.7728	.5075	.2421	.9767	.7113	.4459	.1805	.9151	.6497	.3843
433655	48.5694	50.3040	52.0386	53.7732	55.5078	57.2425	58.9771	60.7117	62.4463	64.1809	65.9156	67.6502	69.3848
658	.5697	.3043	.0390	.7736	.5082	.2429	.9775	.7121	.4468	.1814	.9160	.6506	.3853
661	.5700	.3047	.0393	.7740	.5086	.2433	.9779	.7125	.4472	.1818	.9165	.6511	.3858
664	.5704	.3050	.0397	.7743	.5090	.2436	.9783	.7130	.4476	.1823	.9169	.6516	.3862
667	.5707	.3054	.0400	.7747	.5094	.2440	.9787	.7134	.4480	.1827	.9174	.6521	.3867
433670	48.5710	50.3057	52.0404	53.7751	55.5098	57.2444	58.9791	60.7138	62.4485	64.1832	65.9178	65.6525	69.3872
673	.5714	.3061	.0408	.7755	.5101	.2448	.9795	.7142	.4489	.1836	.9183	.6530	.3877
676	.5717	.3064	.0411	.7758	.5105	.2452	.9799	.7146	.4493	.1840	.9188	.6535	.3882
679	.5720	.3068	.0415	.7762	.5109	.2456	.9803	.7151	.4498	.1845	.9192	.6539	.3886
682	.5724	.3071	.0418	.7766	.5113	.2460	.9808	.7155	.4502	.1849	.9197	.6544	.3891
433685	48.5727	50.3075	52.0422	53.7769	55.5117	57.2464	58.9812	60.7159	62.4506	64.1854	65.9201	67.6549	69.3896
688	.5731	.3078	.0426	.7773	.5121	.2468	.9816	.7163	.4511	.1858	.9206	.6553	.3901
691	.5734	.3082	.0429	.7777	.5124	.2472	.9820	.7167	.4515	.1863	.9210	.6558	.3906
694	.5737	.3085	.0433	.7781	.5128	.2476	.9824	.7172	.4519	.1867	.9215	.6563	.3910
697	.5741	.3089	.0436	.7784	.5132	.2480	.9828	.7176	.4524	.1872	.9219	.6567	.3915
433700	48.5744	50.3092	52.0440	53.7788	55.5136	57.2484	58.9832	60.7180	62.4528	64.1876	65.9224	67.6572	69.3920

MEGACYCLES PER SECOND

H A R M O N I C S

BASIC FREQ.	164	168	172	176	180	184	188	192	200	208	216	224	232
433400	71.0776	72.8112	74.5448	76.2784	78.0120	79.7456	81.4792	83.2128	86.6800	90.1472	93.6144	97.0816	100.5488
403	.0781	.8117	.5453	.2789	.0125	.7462	.4798	.2134	.6806	.1478	.6150	.0823	.5495
406	.0786	.8122	.5458	.2795	.0131	.7467	.4803	.2140	.6812	.1484	.6157	.0829	.5502
409	.0791	.8127	.5463	.2800	.0136	.7473	.4809	.2145	.6818	.1491	.6163	.0836	.5509
412	.0796	.8132	.5469	.2805	.0142	.7478	.4815	.2151	.6824	.1497	.6170	.0843	.5516
433415	71.0801	72.8137	74.5474	76.2810	78.0147	79.7484	81.4820	83.2157	86.6830	90.1503	93.6176	97.0850	100.5523
418	.0806	.8142	.5479	.2816	.0152	.7489	.4826	.2163	.6836	.1509	.6183	.0856	.5530
421	.0810	.8147	.5484	.2821	.0158	.7495	.4831	.2168	.6842	.1516	.6189	.0863	.5537
424	.0815	.8152	.5489	.2826	.0163	.7500	.4837	.2174	.6848	.1522	.6196	.0870	.5544
427	.0820	.8157	.5494	.2832	.0169	.7506	.4843	.2180	.6854	.1528	.6202	.0876	.5551
433430	71.0825	72.8162	74.5500	76.2837	78.0174	79.7511	81.4848	83.2186	86.6860	90.1534	93.6209	97.0883	100.5558
433	.0830	.8167	.5505	.2842	.0179	.7517	.4854	.2191	.6866	.1541	.6215	.0890	.5565
436	.0835	.8172	.5510	.2847	.0185	.7522	.4860	.2197	.6872	.1547	.6222	.0897	.5572
439	.0840	.8178	.5515	.2853	.0190	.7528	.4865	.2203	.6878	.1553	.6228	.0903	.5578
442	.0845	.8183	.5520	.2858	.0196	.7533	.4871	.2209	.6884	.1559	.6235	.0910	.5585
433445	71.0850	72.8188	74.5525	76.2863	78.0201	79.7539	81.4877	83.2214	86.6890	90.1566	93.6241	97.0917	100.5592
448	.0855	.8193	.5531	.2868	.0206	.7544	.4882	.2220	.6896	.1572	.6248	.0924	.5599
451	.0860	.8198	.5536	.2874	.0212	.7550	.4888	.2226	.6902	.1578	.6254	.0930	.5606
454	.0865	.8203	.5541	.2879	.0217	.7555	.4894	.2232	.6908	.1584	.6261	.0937	.5613
457	.0869	.8208	.5546	.2884	.0223	.7561	.4899	.2237	.6914	.1591	.6267	.0944	.5620
433460	71.0874	72.8213	74.5551	76.2890	78.0228	79.7566	81.4905	83.2243	86.6920	90.1597	93.6274	97.0950	100.5627
463	.0879	.8218	.5556	.2895	.0233	.7572	.4910	.2249	.6926	.1603	.6280	.0957	.5634
466	.0884	.8223	.5562	.2900	.0239	.7577	.4916	.2255	.6932	.1609	.6287	.0964	.5641
469	.0889	.8228	.5567	.2905	.0244	.7583	.4922	.2260	.6938	.1616	.6293	.0971	.5648
472	.0894	.8233	.5572	.2911	.0250	.7588	.4927	.2266	.6944	.1622	.6300	.0977	.5655
433475	71.0899	72.8238	74.5577	76.2916	78.0255	79.7594	81.4933	83.2272	86.6950	90.1628	93.6306	97.0984	100.5662
478	.0904	.8243	.5582	.2921	.0260	.7600	.4939	.2278	.6956	.1634	.6312	.0991	.5669
481	.0909	.8248	.5587	.2927	.0266	.7605	.4944	.2284	.6962	.1640	.6319	.0997	.5676
484	.0914	.8253	.5592	.2932	.0271	.7611	.4950	.2289	.6968	.1647	.6325	.1004	.5683
487	.0919	.8258	.5598	.2937	.0277	.7616	.4956	.2295	.6974	.1653	.6332	.1011	.5690
433490	71.0924	72.8263	74.5603	76.2942	78.0282	79.7622	81.4961	83.2301	86.6980	90.1659	93.6338	97.1018	100.5697
493	.0929	.8268	.5608	.2948	.0287	.7627	.4967	.2307	.6986	.1665	.6345	.1024	.5704
496	.0933	.8273	.5613	.2953	.0293	.7633	.4972	.2312	.6992	.1672	.6351	.1031	.5711
499	.0938	.8278	.5618	.2958	.0298	.7638	.4978	.2318	.6998	.1678	.6358	.1038	.5718
502	.0943	.8283	.5623	.2964	.0304	.7644	.4984	.2324	.7004	.1684	.6364	.1044	.5725
433505	71.0948	72.8288	74.5629	76.2969	78.0309	79.7649	81.4989	83.2330	86.7010	90.1690	93.6371	97.1051	100.5732
508	.0953	.8293	.5634	.2974	.0314	.7655	.4995	.2335	.7016	.1697	.6377	.1058	.5739
511	.0958	.8298	.5639	.2979	.0320	.7660	.5001	.2341	.7022	.1703	.6384	.1065	.5746
514	.0963	.8304	.5644	.2985	.0325	.7666	.5006	.2347	.7028	.1709	.6390	.1071	.5752
517	.0968	.8309	.5649	.2990	.0331	.7671	.5012	.2353	.7034	.1715	.6397	.1078	.5759
433520	71.0973	72.8314	74.5654	76.2995	78.0336	79.7677	81.5018	83.2358	86.7040	90.1722	93.6403	97.1085	100.5766
523	.0978	.8319	.5660	.3000	.0341	.7682	.5023	.2364	.7046	.1728	.6410	.1092	.5773
526	.0983	.8324	.5665	.3006	.0347	.7688	.5029	.2370	.7052	.1734	.6416	.1098	.5780
529	.0988	.8329	.5670	.3011	.0352	.7693	.5035	.2376	.7058	.1740	.6423	.1105	.5787
532	.0992	.8334	.5675	.3016	.0358	.7699	.5040	.2381	.7064	.1747	.6429	.1112	.5794
433535	71.0997	72.8339	74.5680	76.3022	78.0363	79.7704	81.5046	83.2387	86.7070	90.1753	93.6436	97.1118	100.5801
538	.1002	.8344	.5685	.3027	.0368	.7710	.5051	.2393	.7076	.1759	.6442	.1125	.5808
541	.1007	.8349	.5691	.3032	.0374	.7715	.5057	.2399	.7082	.1765	.6449	.1132	.5815
544	.1012	.8354	.5696	.3037	.0379	.7721	.5063	.2404	.7088	.1772	.6455	.1139	.5822
547	.1017	.8359	.5701	.3043	.0385	.7726	.5068	.2410	.7094	.1778	.6462	.1145	.5829
433550	71.1022	72.8364	74.5706	76.3048	78.0390	79.7732	81.5074	83.2416	86.7100	90.1784	93.6468	97.1152	100.5836
553	.1027	.8369	.5711	.3053	.0395	.7738	.5080	.2422	.7106	.1790	.6474	.1159	.5843
556	.1032	.8374	.5716	.3059	.0401	.7743	.5085	.2428	.7112	.1796	.6481	.1165	.5850
559	.1037	.8379	.5721	.3064	.0406	.7749	.5091	.2433	.7118	.1803	.6487	.1172	.5857
562	.1042	.8384	.5727	.3069	.0412	.7754	.5097	.2439	.7124	.1809	.6494	.1179	.5864
433565	71.1047	72.8389	74.5732	76.3074	78.0417	79.7760	81.5102	83.2445	86.7130	90.1815	93.6500	97.1186	100.5871
568	.1052	.8394	.5737	.3080	.0422	.7765	.5108	.2451	.7136	.1821	.6507	.1192	.5878
571	.1056	.8399	.5742	.3085	.0428	.7771	.5113	.2456	.7142	.1828	.6513	.1199	.5885
574	.1061	.8404	.5747	.3090	.0433	.7776	.5119	.2462	.7148	.1834	.6520	.1206	.5892
577	.1066	.8409	.5752	.3096	.0439	.7782	.5125	.2468	.7154	.1840	.6526	.1212	.5899
433580	71.1071	72.8414	74.5758	76.3101	78.0444	79.7787	81.5130	83.2474	86.7160	90.1846	93.6533	97.1219	100.5906
583	.1076	.8419	.5763	.3106	.0449	.7793	.5136	.2479	.7166	.1853	.6539	.1226	.5913
586	.1081	.8424	.5768	.3111	.0455	.7798	.5142	.2485	.7172	.1859	.6546	.1233	.5920
589	.1086	.8430	.5773	.3117	.0460	.7804	.5147	.2491	.7178	.1865	.6552	.1239	.5926
592	.1091	.8435	.5778	.3122	.0466	.7809	.5153	.2497	.7184	.1871	.6559	.1246	.5933
433595	71.1096	72.8440	74.5783	76.3127	78.0471	79.7815	81.5159	83.2502	86.7190	90.1878	93.6565	97.1253	100.5940
598	.1101	.8445	.5789	.3132	.0476	.7820	.5164	.2508	.7196	.1884	.6572	.1260	.5947
601	.1106	.8450	.5794	.3138	.0482	.7826	.5170	.2514	.7202	.1890	.6578	.1266	.5954
604	.1111	.8455	.5799	.3143	.0487	.7831	.5176	.2520	.7208	.1896	.6585	.1273	.5961
607	.1115	.8460	.5804	.3148	.0493	.7837	.5181	.2525	.7214	.1903	.6591	.1280	.5968
433610	71.1120	72.8465	74.5809	76.3154	78.0498	79.7842	81.5187	83.2531	86.7220	90.1909	93.6598	97.1286	100.5975
613	.1125	.8470	.5814	.3159	.0503	.7848	.5192	.2537	.7226	.1915	.6604	.1293	.5982
616	.1130	.8475	.5820	.3164	.0509	.7853	.5198	.2543	.7232	.1921	.6611	.1300	.5989
619	.1135	.8480	.5825	.3169	.0514	.7859	.5204	.2548	.7238	.1928	.6617	.1307	.5996
622	.1140	.8485	.5830	.3175	.0520	.7864	.5209	.2554	.7244	.1934	.6624	.1313	.6003
433625	71.1145	72.8490	74.5835	76.3180	78.0525	79.7870	81.5215	83.2560	86.7250	90.1940	93.6630	97.1320	100.6010
628	.1150	.8495	.5840	.3185	.0530	.7876	.5221	.2566	.7256	.1946	.6636	.1327	.6017
631	.1155	.8500	.5845	.3191	.0536	.7881	.5226	.2572	.7262	.1952	.6643	.1333	.6024
634	.1160	.8505	.5850	.3196	.0541	.7887	.5232	.2577	.7268	.1959	.6649	.1340	.6031
637	.1165	.8510	.5856	.3201	.0547	.7892	.5238	.2583	.7274	.1965	.6656	.1347	.6038
433640	71.1170	72.8515	74.5861	76.3206	78.0552	79.7898	81.5243	83.2589	86.7280	90.1971	93.6662	97.1354	100.6045
643	.1175	.8520	.5866	.3212	.0557	.7903	.5249	.2595	.7286	.1977	.6669	.1360	.6052
646	.1179	.8525	.5871	.3217	.0563	.7909	.5254	.2600	.7292	.1984	.6675	.1367	.6059
649	.1184	.8530	.5876	.3222	.0568	.7914	.5260	.2606	.7298	.1990	.6682	.1374	.6066
652	.1189	.8535	.5881	.3228	.0574	.7920	.5266	.2612	.7304	.1996	.6688	.1380	.6073
433655	71.1194	72.8540	74.5887	76.3233	78.0579	79.7925	81.5271	83.2618	86.7310	90.2002	93.6695	97.1387	100.6080
658	.1199	.8545	.5892	.3238	.0584	.7931	.5277	.2623	.7316	.2009	.6701	.1394	.6087
661	.1204	.8550	.5897	.3243	.0590	.7936	.5283	.2629	.7322	.2015	.6708	.1401	.6094
664	.1209	.8556	.5902	.3249	.0595	.7942	.5288	.2635	.7328	.2021	.6714	.1407	.6100
667	.1214	.8561	.5907	.3254	.0601	.7947	.5294	.2641	.7334	.2027	.6721	.1414	.6107
433670	71.1219	72.8566	74.5912	76.3259	78.0606	79.7953	81.5300	83.2646	86.7340	90.2034	93.6727	97.1421	100.6114
673	.1224	.8571	.5918	.3264	.0611	.7958	.5305	.2652	.7346	.2040	.6734	.1428	.6121
676	.1229	.8576	.5923	.3270	.0617	.7964	.5311	.2658	.7352	.2046	.6740	.1434	.6128
679	.1234	.8581	.5928	.3275	.0622	.7969	.5317	.2664	.7358	.2052	.6747	.1441	.6135
682	.1238	.8586	.5933	.3280	.0628	.7975	.5322	.2669	.7364	.2059	.6753	.1448	.6142
433685	71.1243	72.8591	74.5938	76.3286	78.0633	79.7980	81.5328	83.2675	86.7370	90.2065	93.6760	97.1454	100.6149
688	.1248	.8596	.5943	.3291	.0638	.7986	.5333	.2681	.7376	.2071	.6766	.1461	.6156
691	.1253	.8601	.5949	.3296	.0644	.7991	.5339	.2687	.7382	.2077	.6773	.1468	.6163
694	.1258	.8606	.5954	.3301	.0649	.7997	.5345	.2692	.7388	.2084	.6779	.1475	.6170
697	.1263	.8611	.5959	.3307	.0655	.8002	.5350	.2698	.7394	.2090	.6786	.1481	.6177
433700	71.1268	72.8616	74.5964	76.3312	78.0660	79.8008	81.5356	83.2704	86.7400	90.2096	93.6792	97.1488	100.6184

MEGACYCLES PER SECOND

H A R M O N I C S

BASIC FREQ.	112	116	120	124	128	132	136	140	144	148	152	156	160
433700	48.5744	50.3092	52.0440	53.7788	55.5136	57.2484	58.9832	60.7180	62.4528	64.1876	65.9224	67.6572	69.3920
703	.5747	.3095	.0444	.7792	.5140	.2488	.9836	.7184	.4532	.1880	.9229	.6577	.3925
706	.5751	.3099	.0447	.7795	.5144	.2492	.9840	.7188	.4537	.1885	.9233	.6581	.3930
709	.5754	.3102	.0451	.7799	.5148	.2496	.9844	.7193	.4541	.1889	.9238	.6586	.3934
712	.5757	.3106	.0454	.7803	.5151	.2500	.9848	.7197	.4545	.1894	.9242	.6591	.3939
433715	48.5761	50.3109	52.0458	53.7807	55.5155	57.2504	58.9852	60.7201	62.4550	64.1898	65.9247	67.6595	69.3944
718	.5764	.3113	.0462	.7810	.5159	.2508	.9856	.7205	.4554	.1903	.9251	.6600	.3949
721	.5768	.3116	.0465	.7814	.5163	.2512	.9861	.7209	.4558	.1907	.9256	.6605	.3954
724	.5771	.3120	.0469	.7818	.5167	.2516	.9865	.7214	.4563	.1912	.9260	.6609	.3958
727	.5774	.3123	.0472	.7821	.5171	.2520	.9869	.7218	.4567	.1916	.9265	.6614	.3963
433730	48.5778	50.3127	52.0476	53.7825	55.5174	57.2524	58.9873	60.7222	62.4571	64.1920	65.9270	67.6619	69.3968
733	.5781	.3130	.0480	.7829	.5178	.2528	.9877	.7226	.4576	.1925	.9274	.6623	.3973
736	.5784	.3134	.0483	.7833	.5182	.2532	.9881	.7230	.4580	.1929	.9279	.6628	.3978
739	.5788	.3137	.0487	.7836	.5186	.2535	.9885	.7235	.4584	.1934	.9283	.6633	.3982
742	.5791	.3141	.0490	.7840	.5190	.2539	.9889	.7239	.4588	.1938	.9288	.6638	.3987
433745	48.5794	50.3144	52.0494	53.7844	55.5194	57.2543	58.9893	60.7243	62.4593	64.1943	65.9292	67.6642	69.3992
748	.5798	.3148	.0498	.7848	.5197	.2547	.9897	.7247	.4597	.1947	.9297	.6647	.3997
751	.5801	.3151	.0501	.7851	.5201	.2551	.9901	.7251	.4601	.1951	.9302	.6652	.4002
754	.5804	.3155	.0505	.7855	.5205	.2555	.9905	.7256	.4606	.1956	.9306	.6656	.4006
757	.5808	.3158	.0508	.7859	.5209	.2559	.9910	.7260	.4610	.1960	.9311	.6661	.4011
433760	48.5811	50.3162	52.0512	53.7862	55.5213	57.2563	58.9914	60.7264	62.4614	64.1965	65.9315	67.6666	69.4016
763	.5815	.3165	.0516	.7866	.5217	.2567	.9918	.7268	.4619	.1969	.9320	.6670	.4021
766	.5818	.3169	.0519	.7870	.5220	.2571	.9922	.7272	.4623	.1974	.9324	.6675	.4026
769	.5821	.3172	.0523	.7874	.5224	.2575	.9926	.7277	.4627	.1978	.9329	.6680	.4030
772	.5825	.3176	.0526	.7877	.5228	.2579	.9930	.7281	.4632	.1983	.9333	.6684	.4035
433775	48.5828	50.3179	52.0530	53.7881	55.5232	57.2583	58.9934	60.7285	62.4636	64.1987	65.9338	67.6689	69.4040
778	.5831	.3182	.0534	.7885	.5236	.2587	.9938	.7289	.4640	.1991	.9343	.6694	.4045
781	.5835	.3186	.0537	.7888	.5240	.2591	.9942	.7293	.4645	.1996	.9347	.6698	.4050
784	.5838	.3189	.0541	.7892	.5244	.2595	.9946	.7298	.4649	.2000	.9352	.6703	.4054
787	.5841	.3193	.0544	.7896	.5247	.2599	.9950	.7302	.4653	.2005	.9356	.6708	.4059
433790	48.5845	50.3196	52.0548	53.7900	55.5251	57.2603	58.9954	60.7306	62.4658	64.2009	65.9361	67.6712	69.4064
793	.5848	.3200	.0552	.7903	.5255	.2607	.9958	.7310	.4662	.2014	.9365	.6717	.4069
796	.5852	.3203	.0555	.7907	.5259	.2611	.9963	.7314	.4666	.2018	.9370	.6722	.4074
799	.5855	.3207	.0559	.7911	.5263	.2615	.9967	.7319	.4671	.2023	.9374	.6726	.4078
802	.5858	.3210	.0562	.7914	.5267	.2619	.9971	.7323	.4675	.2027	.9379	.6731	.4083
433805	48.5862	50.3214	52.0566	53.7918	55.5270	57.2623	58.9975	60.7327	62.4679	64.2031	65.9384	67.6736	69.4088
808	.5865	.3217	.0570	.7922	.5274	.2627	.9979	.7331	.4684	.2036	.9388	.6740	.4093
811	.5868	.3221	.0573	.7926	.5278	.2631	.9983	.7335	.4688	.2040	.9393	.6745	.4098
814	.5872	.3224	.0577	.7929	.5282	.2634	.9987	.7340	.4692	.2045	.9397	.6750	.4102
817	.5875	.3228	.0580	.7933	.5286	.2638	.9991	.7344	.4696	.2049	.9402	.6755	.4107
433820	48.5878	50.3231	52.0584	53.7937	55.5290	57.2642	58.9995	60.7348	62.4701	64.2054	65.9406	67.6759	69.4112
823	.5882	.3235	.0588	.7941	.5293	.2646	.9999	.7352	.4705	.2058	.9411	.6764	.4117
826	.5885	.3238	.0591	.7944	.5297	.2650	59.0003	.7356	.4709	.2062	.9416	.6769	.4122
829	.5888	.3242	.0595	.7948	.5301	.2654	.0007	.7361	.4714	.2067	.9420	.6773	.4126
832	.5892	.3245	.0598	.7952	.5305	.2658	.0012	.7365	.4718	.2071	.9425	.6778	.4131
433835	48.5895	50.3249	52.0602	53.7955	55.5309	57.2662	59.0016	60.7369	62.4722	64.2076	65.9429	67.6783	69.4136
838	.5899	.3252	.0606	.7959	.5313	.2666	.0020	.7373	.4727	.2080	.9434	.6787	.4141
841	.5902	.3256	.0609	.7963	.5316	.2670	.0024	.7377	.4731	.2085	.9438	.6792	.4146
844	.5905	.3259	.0613	.7967	.5320	.2674	.0028	.7382	.4735	.2089	.9443	.6797	.4150
847	.5909	.3263	.0616	.7970	.5324	.2678	.0032	.7386	.4740	.2094	.9447	.6801	.4155
433850	48.5912	50.3266	52.0620	53.7974	55.5328	57.2682	59.0036	60.7390	62.4744	64.2098	65.9452	67.6806	69.4160
853	.5915	.3269	.0624	.7978	.5332	.2686	.0040	.7394	.4748	.2102	.9457	.6811	.4165
856	.5919	.3273	.0627	.7981	.5336	.2690	.0044	.7398	.4753	.2107	.9461	.6815	.4170
859	.5922	.3276	.0631	.7985	.5340	.2694	.0048	.7403	.4757	.2111	.9466	.6820	.4174
862	.5925	.3280	.0634	.7989	.5343	.2698	.0052	.7407	.4761	.2116	.9470	.6825	.4179
433865	48.5929	50.3283	52.0638	53.7993	55.5347	57.2702	59.0056	60.7411	62.4766	64.2120	65.9475	67.6829	69.4184
868	.5932	.3287	.0642	.7996	.5351	.2706	.0060	.7415	.4770	.2125	.9479	.6834	.4189
871	.5936	.3290	.0645	.8000	.5355	.2710	.0065	.7419	.4774	.2129	.9484	.6839	.4194
874	.5939	.3294	.0649	.8004	.5359	.2714	.0069	.7424	.4779	.2134	.9488	.6843	.4198
877	.5942	.3297	.0652	.8007	.5363	.2718	.0073	.7428	.4783	.2138	.9493	.6848	.4203
433880	48.5946	50.3301	52.0656	53.8011	55.5366	57.2722	59.0077	60.7432	62.4787	64.2142	65.9498	67.6853	69.4208
883	.5949	.3304	.0660	.8015	.5370	.2726	.0081	.7436	.4792	.2147	.9502	.6857	.4213
886	.5952	.3308	.0663	.8019	.5374	.2730	.0085	.7440	.4796	.2151	.9507	.6862	.4218
889	.5956	.3311	.0667	.8022	.5378	.2733	.0089	.7445	.4800	.2156	.9511	.6867	.4222
892	.5959	.3315	.0670	.8026	.5382	.2737	.0093	.7449	.4804	.2160	.9516	.6872	.4227
433895	48.5962	50.3318	52.0674	53.8030	55.5386	57.2741	59.0097	60.7453	62.4809	64.2165	65.9520	67.6876	69.4232
898	.5966	.3322	.0678	.8034	.5389	.2745	.0101	.7457	.4813	.2169	.9525	.6881	.4237
901	.5969	.3325	.0681	.8037	.5393	.2749	.0105	.7461	.4817	.2173	.9530	.6886	.4242
904	.5972	.3329	.0685	.8041	.5397	.2753	.0109	.7466	.4822	.2178	.9534	.6890	.4246
907	.5976	.3332	.0688	.8045	.5401	.2757	.0114	.7470	.4826	.2182	.9539	.6895	.4251
433910	48.5979	50.3336	52.0692	53.8048	55.5405	57.2761	59.0118	60.7474	62.4830	64.2187	65.9543	67.6900	69.4256
913	.5983	.3339	.0696	.8052	.5409	.2765	.0122	.7478	.4835	.2191	.9548	.6904	.4261
916	.5986	.3343	.0699	.8056	.5412	.2769	.0126	.7482	.4839	.2196	.9552	.6909	.4266
919	.5989	.3346	.0703	.8060	.5416	.2773	.0130	.7487	.4843	.2200	.9557	.6914	.4270
922	.5993	.3350	.0706	.8063	.5420	.2777	.0134	.7491	.4848	.2205	.9561	.6918	.4275
433925	48.5996	50.3353	52.0710	53.8067	55.5424	57.2781	59.0138	60.7495	62.4852	64.2209	65.9566	67.6923	69.4280
928	.5999	.3356	.0714	.8071	.5428	.2785	.0142	.7499	.4856	.2213	.9571	.6928	.4285
931	.6003	.3360	.0717	.8074	.5432	.2789	.0146	.7503	.4861	.2218	.9575	.6932	.4290
934	.6006	.3363	.0721	.8078	.5436	.2793	.0150	.7508	.4865	.2222	.9580	.6937	.4294
937	.6009	.3367	.0724	.8082	.5439	.2797	.0154	.7512	.4869	.2227	.9584	.6942	.4299
433940	48.6013	50.3370	52.0728	53.8086	55.5443	57.2801	59.0158	60.7516	62.4874	64.2231	65.9589	67.6946	69.4304
943	.6016	.3374	.0732	.8089	.5447	.2805	.0162	.7520	.4878	.2236	.9593	.6951	.4309
946	.6020	.3377	.0735	.8093	.5451	.2809	.0167	.7524	.4882	.2240	.9598	.6956	.4314
949	.6023	.3381	.0739	.8097	.5455	.2813	.0171	.7529	.4887	.2245	.9602	.6960	.4318
952	.6026	.3384	.0742	.8100	.5459	.2817	.0175	.7533	.4891	.2249	.9607	.6965	.4323
433955	48.6030	50.3388	52.0746	53.8104	55.5462	57.2821	59.0179	60.7537	62.4895	64.2253	65.9612	67.6970	69.4328
958	.6033	.3391	.0750	.8108	.5466	.2825	.0183	.7541	.4900	.2258	.9616	.6974	.4333
961	.6036	.3395	.0753	.8112	.5470	.2829	.0187	.7545	.4904	.2262	.9621	.6979	.4338
964	.6040	.3398	.0757	.8115	.5474	.2832	.0191	.7550	.4908	.2267	.9625	.6984	.4342
967	.6043	.3402	.0760	.8119	.5478	.2836	.0195	.7554	.4912	.2271	.9630	.6989	.4347
433970	48.6046	50.3405	52.0764	53.8123	55.5482	57.2840	59.0199	60.7558	62.4917	64.2276	65.9634	67.6993	69.4352
973	.6050	.3409	.0768	.8127	.5485	.2844	.0203	.7562	.4921	.2280	.9639	.6998	.4357
976	.6053	.3412	.0771	.8130	.5489	.2848	.0207	.7566	.4925	.2284	.9644	.7003	.4362
979	.6056	.3416	.0775	.8134	.5493	.2852	.0211	.7571	.4930	.2289	.9648	.7007	.4366
982	.6060	.3419	.0778	.8138	.5497	.2856	.0216	.7575	.4934	.2293	.9653	.7012	.4371
433985	48.6063	50.3423	52.0782	53.8141	55.5501	57.2860	59.0220	60.7579	62.4938	64.2298	65.9657	67.7017	69.4376
988	.6067	.3426	.0786	.8145	.5505	.2864	.0224	.7583	.4943	.2302	.9662	.7021	.4381
991	.6070	.3430	.0789	.8149	.5508	.2868	.0228	.7587	.4947	.2307	.9666	.7026	.4386
994	.6073	.3433	.0793	.8153	.5512	.2872	.0232	.7592	.4951	.2311	.9671	.7031	.4390
997	.6077	.3437	.0796	.8156	.5516	.2876	.0236	.7596	.4956	.2316	.9675	.7035	.4395
434000	48.6080	50.3440	52.0800	53.8160	55.5520	57.2880	59.0240	60.7600	62.4960	64.2320	65.9680	67.7040	69.4400

MEGACYCLES PER SECOND

H A R M O N I C S

BASIC FREQ.	164	168	172	176	180	184	188	192	200	208	216	224	232
433700	71.1268	72.8616	74.5964	76.3312	78.0660	79.8008	81.5356	83.2704	86.7400	90.2096	93.6792	97.1488	100.6184
703	.1273	.8621	.5969	.3317	.0665	.8014	.5362	.2710	.7406	.2102	.6798	.1495	.6191
706	.1278	.8626	.5974	.3323	.0671	.8019	.5367	.2716	.7412	.2108	.6805	.1501	.6198
709	.1283	.8631	.5979	.3328	.0676	.8025	.5373	.2721	.7418	.2115	.6811	.1508	.6205
712	.1288	.8636	.5985	.3333	.0682	.8030	.5379	.2727	.7424	.2121	.6818	.1515	.6212
433715	71.1293	72.8641	74.5990	76.3338	78.0687	79.8036	81.5384	83.2733	86.7430	90.2127	93.6824	97.1522	100.6219
718	.1298	.8646	.5995	.3344	.0692	.8041	.5390	.2739	.7436	.2133	.6831	.1528	.6226
721	.1302	.8651	.6000	.3349	.0698	.8047	.5395	.2744	.7442	.2140	.6837	.1535	.6233
724	.1307	.8656	.6005	.3354	.0703	.8052	.5401	.2750	.7448	.2146	.6844	.1542	.6240
727	.1312	.8661	.6010	.3360	.0709	.8058	.5407	.2756	.7454	.2152	.6850	.1548	.6247
433730	71.1317	72.8666	74.6016	76.3365	78.0714	79.8063	81.5412	83.2762	86.7460	90.2158	93.6857	97.1555	100.6254
733	.1322	.8671	.6021	.3370	.0719	.8069	.5418	.2767	.7466	.2165	.6863	.1562	.6261
736	.1327	.8676	.6026	.3375	.0725	.8074	.5424	.2773	.7472	.2171	.6870	.1569	.6268
739	.1332	.8682	.6031	.3381	.0730	.8080	.5429	.2779	.7478	.2177	.6876	.1575	.6274
742	.1337	.8687	.4036	.3386	.0736	.8085	.5435	.2785	.7484	.2183	.6883	.1582	.6281
433745	71.1342	72.8692	74.6041	76.3391	78.0741	79.8091	81.5441	83.2790	86.7490	90.2190	93.6889	97.1589	100.6288
748	.1347	.8697	.6047	.3396	.0746	.8096	.5446	.2796	.7496	.2196	.6896	.1596	.6295
751	.1352	.8702	.6052	.3402	.0752	.8102	.5452	.2802	.7502	.2202	.6902	.1602	.6302
754	.1357	.8707	.6057	.3407	.0757	.8107	.5458	.2808	.7508	.2208	.6909	.1609	.6309
757	.1361	.8712	.6062	.3412	.0763	.8113	.5463	.2813	.7514	.2215	.6915	.1616	.6316
433760	71.1366	72.8717	74.6067	76.3418	78.0768	79.8118	81.5469	83.2819	86.7520	90.2221	93.6922	97.1622	100.6323
763	.1371	.8722	.6072	.3423	.0773	.8124	.5474	.2825	.7526	.2227	.6928	.1629	.6330
766	.1376	.8727	.6078	.3428	.0779	.8129	.5480	.2831	.7532	.2233	.6935	.1636	.6337
769	.1381	.8732	.6083	.3433	.0784	.8135	.5486	.2836	.7538	.2240	.6941	.1643	.6344
772	.1386	.8737	.6088	.3439	.0790	.8140	.5491	.2842	.7544	.2246	.6948	.1649	.6351
433775	71.1391	72.8742	74.6093	76.3444	78.0795	79.8146	81.5497	83.2848	86.7550	90.2252	93.6954	97.1656	100.6358
778	.1396	.8747	.6098	.3449	.0800	.8152	.5503	.2854	.7556	.2258	.6960	.1663	.6365
781	.1401	.8752	.6103	.3455	.0806	.8157	.5508	.2860	.7562	.2264	.6967	.1669	.6372
784	.1406	.8757	.6108	.3460	.0811	.8163	.5514	.2865	.7568	.2271	.6973	.1676	.6379
787	.1411	.8762	.6114	.3465	.0817	.8168	.5520	.2871	.7574	.2277	.6980	.1683	.6386
433790	71.1416	72.8767	74.6119	76.3470	78.0822	79.8174	81.5525	83.2877	86.7580	90.2283	93.6986	97.1690	100.6393
793	.1421	.8772	.6124	.3476	.0827	.8179	.5531	.2883	.7586	.2289	.6993	.1696	.6400
796	.1425	.8777	.6129	.3481	.0833	.8185	.5536	.2888	.7592	.2296	.6999	.1703	.6407
799	.1430	.8782	.6134	.3486	.0838	.8190	.5542	.2894	.7598	.2302	.7006	.1710	.6414
802	.1435	.8787	.6139	.3492	.0844	.8196	.5548	.2900	.7604	.2308	.7112	.1716	.6421
433805	71.1440	72.8792	74.6145	76.3497	78.0849	79.8201	81.5553	83.2906	86.7610	90.2314	93.7019	97.1723	100.6428
808	.1445	.8797	.6150	.3502	.0854	.8207	.5559	.2911	.7616	.2321	.7025	.1730	.6435
811	.1450	.8802	.6155	.3507	.0860	.8212	.5565	.2917	.7622	.2327	.7032	.1737	.6442
814	.1455	.8808	.6160	.3513	.0865	.8218	.5570	.2923	.7628	.2333	.7038	.1743	.6448
817	.1460	.8813	.6165	.3518	.0871	.8223	.5576	.2929	.7634	.2339	.7045	.1750	.6455
433820	71.1465	72.8818	74.6170	76.3523	78.0876	79.8229	81.5582	83.2934	86.7640	90.2346	93.7051	97.1757	100.6462
823	.1470	.8823	.6176	.3528	.0881	.8234	.5587	.2940	.7646	.2352	.7058	.1764	.6469
826	.1475	.8828	.6181	.3534	.0887	.8240	.5593	.2946	.7652	.2358	.7064	.1770	.6476
829	.1480	.8833	.6186	.3539	.0892	.8245	.5599	.2952	.7658	.2364	.7071	.1777	.6483
832	.1484	.8838	.6191	.3544	.0898	.8251	.5604	.2957	.7664	.2371	.7077	.1784	.6490
433835	71.1489	72.8843	74.6196	76.3550	78.0903	79.8256	81.5610	83.2963	86.7670	90.2377	93.7084	97.1790	100.6497
838	.1494	.8848	.6201	.3555	.0908	.8262	.5615	.2969	.7676	.2383	.7090	.1797	.6504
841	.1499	.8853	.6207	.3560	.0914	.8267	.5621	.2975	.7682	.2389	.7097	.1804	.6511
844	.1504	.8858	.6212	.3565	.0919	.8273	.5627	.2980	.7688	.2396	.7103	.1811	.6518
847	.1509	.8863	.6217	.3571	.0925	.8278	.5632	.2986	.7694	.2402	.7110	.1817	.6525
433850	71.1514	72.8868	74.6222	76.3576	78.0930	79.8284	81.5638	83.2992	86.7700	90.2408	93.7116	97.1824	100.6532
853	.1519	.8873	.6227	.3581	.0935	.8290	.5644	.2998	.7706	.2414	.7122	.1831	.6539
856	.1524	.8878	.6232	.3587	.0941	.8295	.5649	.3004	.7712	.2420	.7129	.1837	.6546
859	.1529	.8883	.6237	.3592	.0946	.8301	.5655	.3009	.7718	.2427	.7135	.1844	.6553
862	.1534	.8888	.6243	.3597	.0952	.8306	.5661	.3015	.7724	.2433	.7142	.1851	.6560
433865	71.1539	72.8893	74.6248	76.3602	78.0957	79.8312	81.5666	83.3021	86.7730	90.2439	93.7148	97.1858	100.6567
868	.1544	.8898	.6253	.3608	.0962	.8317	.5672	.3027	.7736	.2445	.7155	.1864	.6574
871	.1548	.8903	.6258	.3613	.0968	.8323	.5677	.3032	.7742	.2452	.7161	.1871	.6581
874	.1553	.8908	.6263	.3618	.0973	.8328	.5683	.3038	.7748	.2458	.7168	.1878	.6588
877	.1558	.8913	.6268	.3624	.0979	.8334	.5689	.3044	.7754	.2464	.7174	.1884	.6595
433880	71.1563	72.8918	74.6274	76.3629	78.0984	79.8339	81.5694	83.3050	86.7760	90.2470	93.7181	97.1891	100.6602
883	.1568	.8923	.6279	.3634	.0989	.8345	.5700	.3055	.7766	.2477	.7187	.1898	.6609
886	.1573	.8928	.6284	.3639	.0995	.8350	.5706	.3061	.7772	.2483	.7194	.1905	.6616
889	.1578	.8934	.6289	.3645	.1000	.8356	.5711	.3067	.7778	.2489	.7200	.1911	.6622
892	.1583	.8939	.6294	.3650	.1006	.8361	.5717	.3073	.7784	.2495	.7207	.1918	.6629
433895	71.1588	72.8944	74.6299	76.3655	78.1011	79.8367	81.5723	83.3078	86.7790	90.2502	93.7213	97.1925	100.6636
898	.1593	.8949	.6305	.3660	.1016	.8372	.5728	.3084	.7796	.2508	.7220	.1932	.6643
901	.1598	.8954	.6310	.3666	.1022	.8378	.5734	.3090	.7802	.2514	.7226	.1938	.6650
904	.1603	.8959	.6315	.3671	.1027	.8383	.5740	.3096	.7808	.2520	.7233	.1945	.6657
907	.1607	.8964	.6320	.3676	.1033	.8389	.5745	.3101	.7814	.2527	.7239	.1952	.6664
433910	71.1612	72.8969	74.6325	76.3682	78.1038	79.8394	81.5751	83.3107	86.7820	90.2533	93.7246	97.1958	100.6671
913	.1617	.8974	.6330	.3687	.1043	.8400	.5756	.3113	.7826	.2539	.7252	.1965	.6678
916	.1622	.8979	.6336	.3692	.1049	.8405	.5762	.3119	.7832	.2545	.7259	.1972	.6685
919	.1627	.8984	.6341	.3697	.1054	.8411	.5768	.3124	.7838	.2552	.7265	.1979	.6692
922	.1632	.8989	.7346	.3703	.1060	.8416	.5773	.3130	.7844	.2558	.7272	.1985	.6699
433925	71.1637	72.8994	74.6351	76.3708	78.1065	79.8422	81.5779	83.3136	86.7850	90.2564	93.7278	97.1992	100.6706
928	.1642	.8999	.6356	.3713	.1070	.8428	.5785	.3142	.7856	.2570	.7284	.1999	.6713
931	.1647	.9004	.6361	.3719	.1076	.8433	.5790	.3148	.7862	.2576	.7291	.2005	.6720
934	.1652	.9009	.6366	.3724	.1081	.8439	.5796	.3153	.7868	.2583	.7297	.2012	.6727
937	.1657	.9014	.6372	.3729	.1087	.8444	.5802	.3159	.7874	.2589	.7304	.2019	.6734
433940	71.1662	72.9019	74.6377	76.3734	78.1092	79.8450	81.5807	83.3165	86.7880	90.2595	93.7310	97.2026	100.6741
943	.1667	.9024	.6382	.3740	.1097	.8455	.5813	.3171	.7886	.2601	.7317	.2032	.6748
946	.1671	.9029	.6387	.3745	.1103	.8461	.5818	.3176	.7892	.2608	.7323	.2039	.6755
949	.1676	.9034	.6392	.3750	.1108	.8466	.5824	.3182	.7898	.2614	.7330	.2046	.6762
952	.1681	.9039	.6397	.3756	.1114	.8472	.5830	.3188	.7904	.2620	.7336	.2052	.6769
433955	71.1686	72.9044	74.6403	76.3761	78.1119	79.8477	81.5835	83.3194	86.7910	90.2626	93.7343	97.2059	100.6776
958	.1691	.9049	.6408	.3766	.1124	.8483	.5841	.3199	.7916	.2633	.7349	.2066	.6783
961	.1696	.9054	.6413	.3771	.1130	.8488	.5847	.3205	.7922	.2639	.7356	.2073	.6790
964	.1701	.9060	.6418	.3777	.1135	.8494	.5852	.3211	.7928	.2645	.7362	.2079	.6796
967	.1706	.9065	.6423	.3782	.1141	.8499	.5858	.3217	.7934	.2651	.7369	.2086	.6803
433970	71.1711	72.9070	74.6428	76.3787	78.1146	79.8505	81.5864	83.3222	86.7940	90.2658	93.7375	97.2093	100.6810
973	.1716	.9075	.6434	.3792	.1151	.8510	.5869	.3228	.7946	.2664	.7382	.2100	.6817
976	.1721	.9080	.6439	.3798	.1157	.8516	.5875	.3234	.7952	.2670	.7388	.2106	.6824
979	.1726	.9085	.6444	.3803	.1162	.8521	.5881	.3240	.7958	.2676	.7395	.2113	.6831
982	.1730	.9090	.6449	.3808	.1168	.8527	.5886	.3245	.7964	.2683	.7401	.2120	.6838
433985	71.1735	72.9095	74.6454	76.3814	78.1173	79.8532	81.5892	83.3251	86.7970	90.2689	93.7408	97.2126	100.6845
988	.1740	.9100	.6459	.3819	.1178	.8538	.5897	.3257	.7976	.2695	.7414	.2133	.6852
991	.1745	.9105	.6465	.3824	.1184	.8543	.5903	.3263	.7982	.2701	.7421	.2140	.6859
994	.1750	.9110	.6470	.3829	.1189	.8549	.5909	.3268	.7988	.2708	.7427	.2147	.6866
997	.1755	.9115	.6475	.3835	.1195	.8554	.5914	.3274	.7994	.2714	.7434	.2153	.6873
434000	71.1760	72.9120	74.6480	76.3840	78.1200	79.8560	81.5920	83.3280	86.8000	90.2720	93.7440	97.2160	100.6880

MEGACYCLES PER SECOND

FREQUENCY METER FR-5/U—ADDENDA—March 1954

Correction: First (yellow) section of Tables:
Page 25 Left Side, Basic Frequency Line 61,
Change 443980 to read 423980.

REVISIONS TO FREQUENCY METER FR-5/U SCHEMATIC AFFECTING ALL UNITS

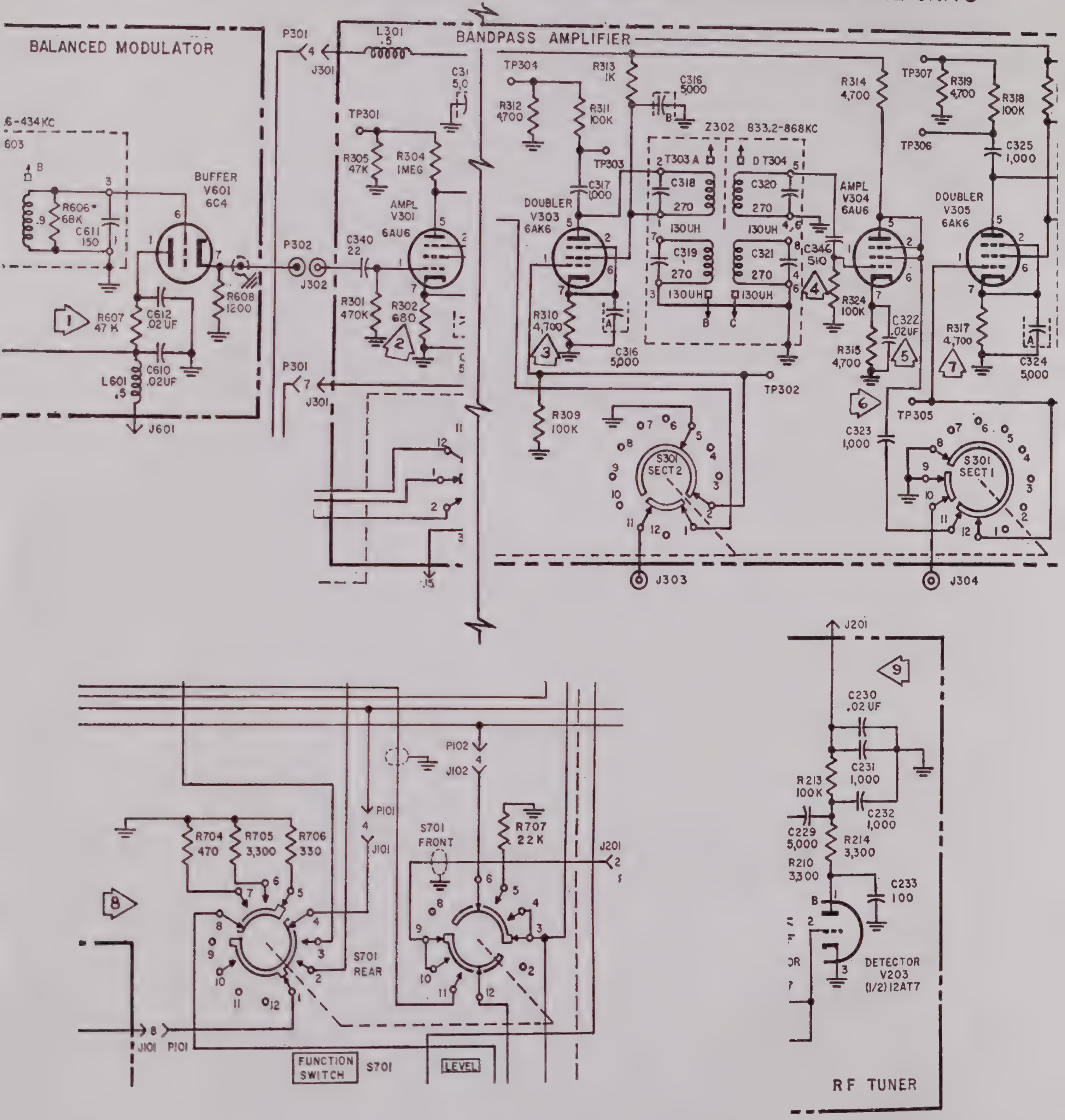

1. R607 WAS 4,700
2. R302 WAS 100
3. R310 WAS 560
4. C346 ADDED ITEM
5. C322 WAS PLATE BYPASS (PIN 5 TO GND)
6. C323 OBTAINED SIGNAL FROM CATHODE (PIN 7)
7. R317 WAS 560
8. R708 DELETED
9. R216 DELETED

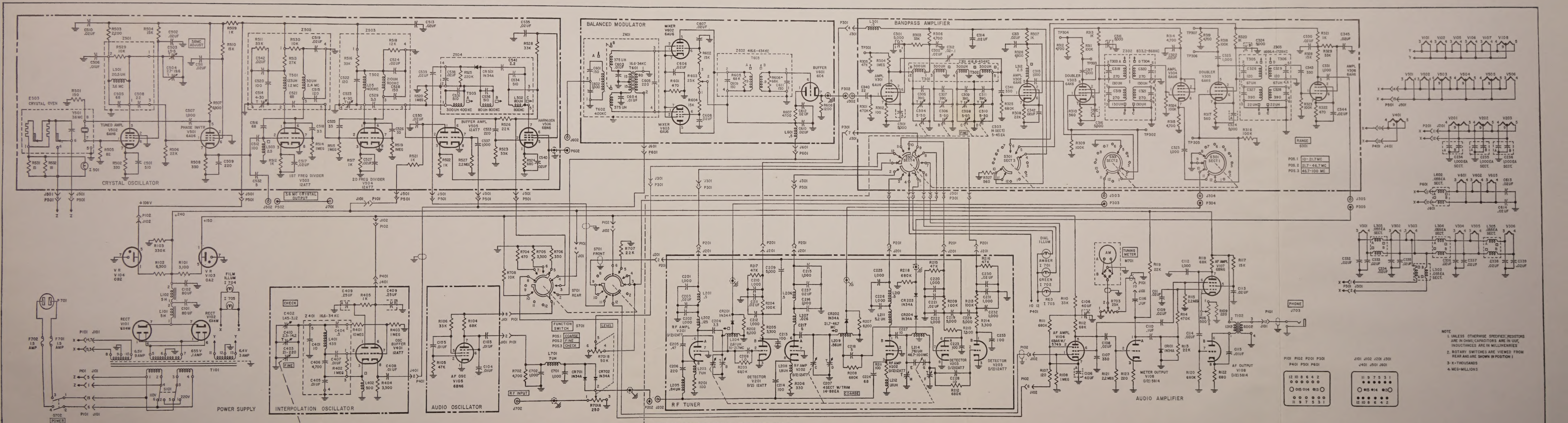

FREQUENCY METER FR-5/U SCHEMATIC DIAGRAM